FOREWORD

This manual (Volume 1) contains maintenance and repair procedures for the engine of the 1991 MR2.

Applicable models: SW20, 21 series

For repair procedures for the chassis and body, and for electrical service procedures, refer to VOLUME 2 (Pub. No. RM179U2).

The manual is divided into 12 sections and 2 appendixes with a thumb index for each section at the edge of the pages.

Please note that the publications below have also been prepared as relevant service manuals to the components and systems in this vehicle.

Manual Name	Pub. No.
• 1991 MR2 Electrical Wiring Diagram Manual	EWD083U
• 1991 MR2 New Car Features	NCF062U

All information in this manual is based on the latest product information at the time of publication. However, specifications and procedures are subject to change without notice.

TOYOTA MOTOR CORPORATION

1991 TOYOTA MR2 REPAIR MANUAL VOLUME 1

NOTE: The screen toned sections below are in VOLUME 2 (Pub.No.RM179U2).

INTRODUCTION IN
MAINTENANCE MA
ENGINE MECHANICAL EM
EXHAUST SYSTEM EX
TURBOCHARGER SYSTEM TC
EMISSION CONTROL SYSTEMS EC
EFI SYSTEM FI
COOLING SYSTEM CO
LUBRICATION SYSTEM LU
IGNITION SYSTEM IG
STARTING SYSTEM ST
CHARGING SYSTEM CH
CLUTCH CL
MANUAL TRANSAXLE MT
AUTOMATIC TRANSAXLE AT
SUSPENSION AND AXLE SA
BRAKE SYSTEM BR
STEERING SR
SRS AIRBAG AB
BODY ELECTRICAL SYSTEM BE
BODY BO
AIR CONDITIONING SYSTEM AC
SERVICE SPECIFICATIONS A
STANDARD BOLT TORQUE SPECIFICATIONS B
SST AND SSM C
ELECTRICAL WIRING DIAGRAMS D

INTRODUCTION

	Page
HOW TO USE THIS MANUAL	IN-2
IDENTIFICATION INFORMATION	IN-4
GENERAL REPAIR INSTRUCTIONS	IN-4
PRECAUTIONS FOR VEHICLES EQUIPPED WITH SRS AIRBAG	IN-7
PRECAUTIONS FOR VEHICLES EQUIPPED WITH A CATALYTIC CONVERTER	IN-11
PRECAUTIONS FOR VEHICLES WITH AN AUDIO SYSTEM WITH BUILT-IN ANTI-THEFT SYSTEM	IN-11
VEHICLE LIFT AND SUPPORT LOCATIONS	IN-12
ABBREVIATIONS USED IN THIS MANUAL	IN-13

HOW TO USE THIS MANUAL

To assist you in finding your way through the manual, the Section Title and major heading are given at the top of every page.

An **INDEX** is provided on the first page of each section to guide you to the item to be repaired.

At the beginning of each section, **PRECAUTIONS** are given that pertain to *all* repair operations contained in that section. *Read these precautions before starting any repair task.*

TROUBLESHOOTING tables are included for each system to help you diagnose the problem and find the cause. The repair for each possible cause is referenced in the remedy column to quickly lead you to the solution.

REPAIR PROCEDURES

Most repair operations begin with an overview illustration. It identifies the components and shows how the parts fit together.

Example:

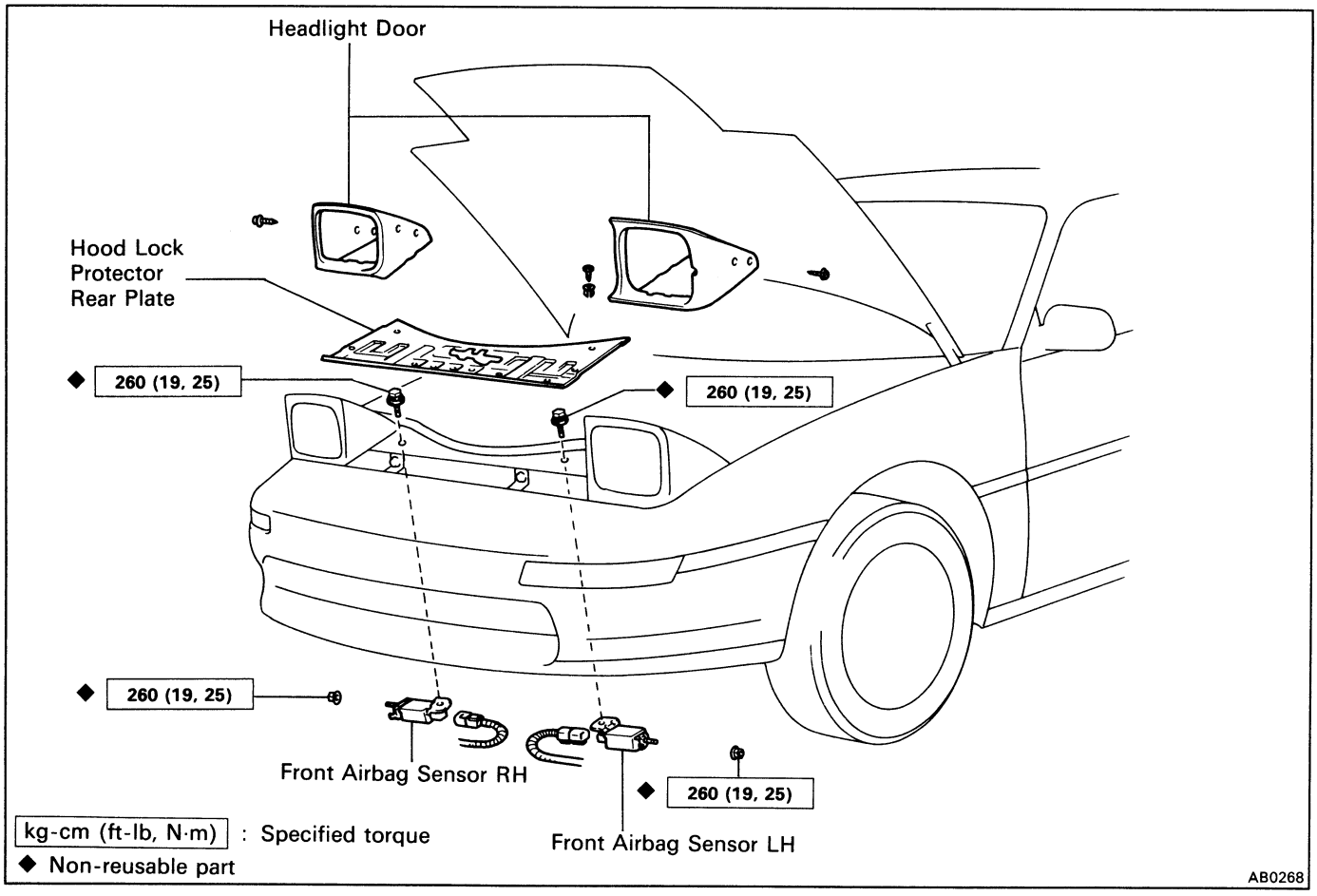

The procedures are presented in a step-by-step format:

- The illustration shows *what* to do and *where* to do it.
- The task heading tells *what* to do.
- The detailed text tells *how* to perform the task and gives other information such as specifications and warnings.

Example:

Task heading: What to do

21. CHECK PISTON STROKE OF OVERDRIVE BRAKE

(a) Place SST and a dial indicator onto the overdrive brake piston as shown in the figure.

SST 09350-30020 (09350-06120)

Set part No. *Component part No.*

Illustration: what to do and where

Detailed text: how to do task

(b) Measure the stroke applying and releasing the compressed air (4 – 8 kg/cm^2, 57 – 114 psi or 392 – 785 kPa) as shown in the figure.

Piston stroke: 1.40 – 1.70 mm (0.0551 – 0.0669 in.)

Specification

This format provides the experienced technician with a FAST TRACK to the information needed. The upper case task heading can be read at a glance when necessary, and the text below it provides detailed information. Important specifications and warnings always stand out in bold type.

REFERENCES

References have been kept to a minimum. However, when they are required you are given the page to refer to.

SPECIFICATIONS

Specifications are presented in bold type throughout the text where needed. You never have to leave the procedure to look up your specifications. They are also found in Appendix A, for quick reference.

CAUTIONS, NOTICES, HINTS:

- CAUTIONS are presented in bold type, and indicate there is a possibility of injury to you or other people.
- NOTICES are also presented in bold type, and indicate the possibility of damaged to the components being repaired.
- HINTS are separated from the text but do not appear in bold. They provide additional information to help you efficiently perform the repair.

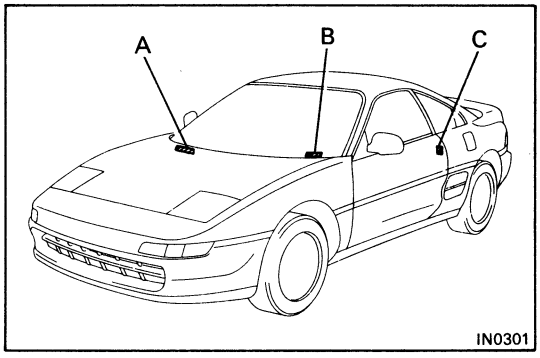

IDENTIFICATION INFORMATION

VEHICLE IDENTIFICATION NUMBER

The vehicle identification number is stamped on the cowl panel. This number has also been stamped on the vehicle identification number plate and certification regulation label.

A. Vehicle Identification Number
B. Vehicle Identification Number Plate
C. Certification Regulation Label

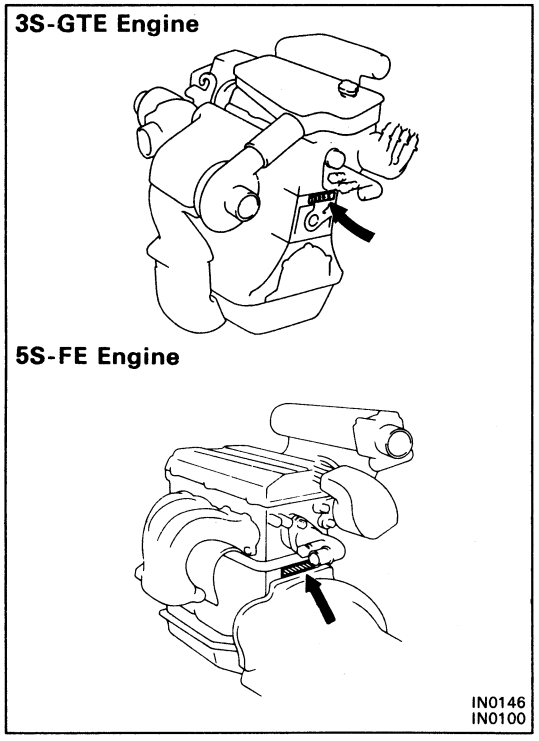

ENGINE SERIAL NUMBER

The engine serial number is stamped on the rear of the cylinder block.

GENERAL REPAIR INSTRUCTIONS

1. Use fender seat and floor covers to keep the vehicle clean and prevent damage.
2. During disassembly, keep parts in the appropriate order to facilitate reassembly.
3. Observe the following:
   - (a) **CAUTION: Work must be started after approx. 20 seconds or longer from the time the ignition switch is turned to the "LOCK" position and the negative (–) terminal cable is disconnected from the battery (See page AB-2).**
   - (b) Before performing electrical work, disconnect the negative cable from the battery terminal.
   - (c) If it is necessary to disconnect the battery for inspection or repair, always disconnect the cable from the negative (–) terminal which is grounded to the vehicle body.
   - (d) To prevent damage to the battery terminal post, loosen the terminal nut and raise the cable straight up without twisting or prying it.
   - (e) Clean the battery terminal posts and cable terminals with a shop rag. Do not scrape them with a file or other abrasive object.
   - (f) Install the cable terminal to the battery post with the nut loose, and tighten the nut after installation. Do not use a hammer to tap the terminal onto the post.
   - (g) Be sure the cover for the positive (+) terminal is properly in place.

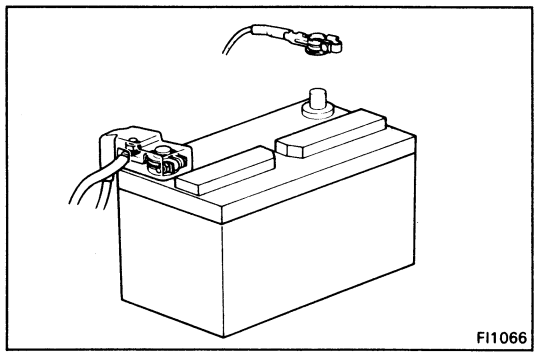

4. Check hose and wiring connectors to make sure that they are secure and correct.

5. Non-reusable parts
   (a) Always replace cotter pins, gaskets, O-rings and oil seals etc. with new ones.
   (b) Non-reusable parts are indicated in the component illustrations by the "◆" symbol.

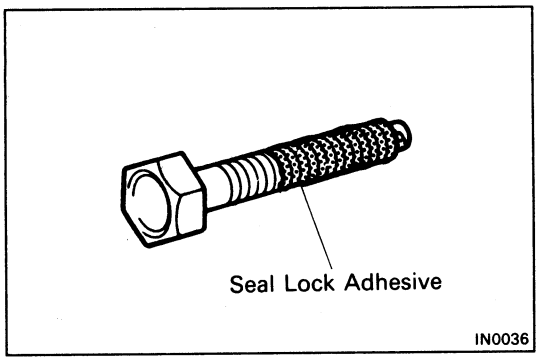

6. Precoated parts

   Precoated parts are bolts and nuts, etc. that are coated with a seal lock adhesive at the factory.
   (a) If a precoated part is retightened, loosened or caused to move in any way, it must be recoated with the specified adhesive.
   (b) Recoating of precoated parts
      (1) Clean off the old adhesive from the bolt, nut or threads.
      (2) Dry with compressed air.
      (3) Apply the specified seal lock adhesive to the bolt or nut threads.
   (c) Precoated parts are indicated in the component illustrations by the "★" symbol.

7. When necessary, use a sealer on gaskets to prevent leaks.

8. Carefully observe all specifications for bolt tightening torques. Always use a torque wrench.

9. Use of special service tools (SST) and special service materials (SSM) may be required, depending on the nature of the repair. Be sure to use SST and SSM where specified and follow the proper work procedure. A list of SST and SSM can be found at the back of this manual.

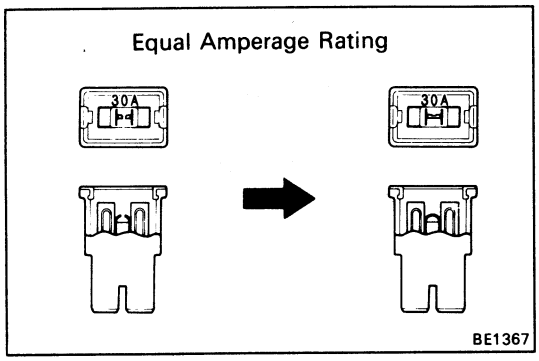

10. When replacing fuses, be sure the new fuse has the correct amperage rating. DO NOT exceed the rating or use one with a lower rating.

11. Care must be taken when jacking up an supporting the vehicle. Be sure to lift and support the vehicle at the proper locations (See page IN-12).
   (a) If the vehicle is to be jacked up only at the front or rear end, be sure to block the wheels at the opposite end in order to ensure safety.
   (b) After the vehicle is jacked up, be sure to support it on stands. It is extremely dangerous to do any work on a vehicle raised on a jack alone, even for a small job that can be finished quickly.

12. Observe the following precautions to avoid damage to the parts:
    (a) **Do not open the cover or case of the ECU unless absolutely necessary. (If the IC terminals are touched, the IC may be destroyed by static electricity.)**

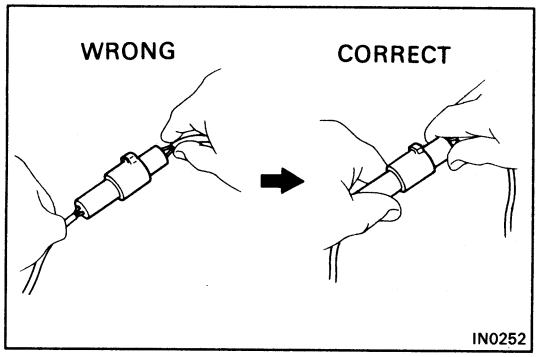

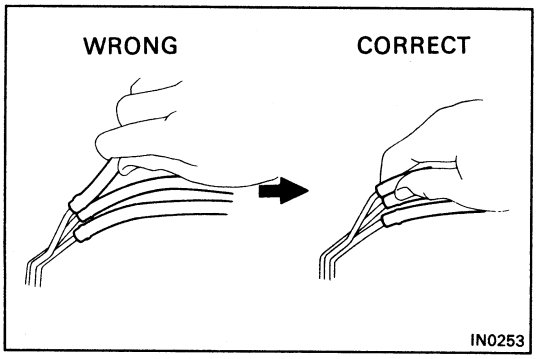

    (b) To pull apart electrical connectors, pull on the connector itself, not the wires.
    (c) Be careful not to drop electrical components,such as sensors or relays. If they are dropped on a hard floor they should be replaced and not reused.
    (d) When checking continuity at the wire connector, insert the tester probe carefully to prevent terminals from bending.
    (e) To disconnect vacuum hoses, pull on the end, not the middle of the hose.
    (f) When steam cleaning an engine, protect the distributor, coil, air filter and VCV from water.
    (g) Never use an impact wrench to remove or install temperature switches or temperature sensors.
    (h) When using a vacuum gauge, never force the hose onto a connector that is too large. Use a step-down adapter instead. Once the hose has been stretched, it may leak.

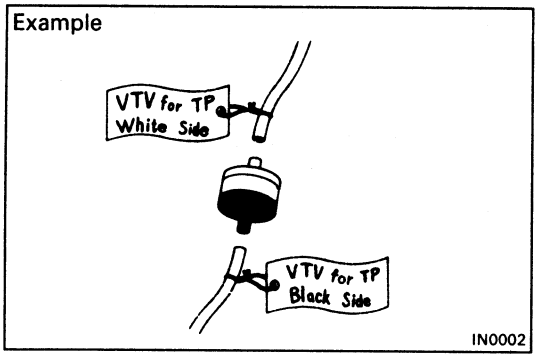

13. Tag hoses before disconnecting them:
    (a) When disconnecting vacuum hoses, use tags to identify how they should be reconnected.
    (b) After completing a job, double check that the vacuum hoses are properly connected. A label under the hood shows the proper layout.

PRECAUTIONS FOR VEHICLES EQUIPPED WITH SRS AIRBAG

The 1991 MR2 for USA specifications is equipped with an SRS (Supplemental Restraint System) airbag.
Failure to carry out service operations in the correct sequence could cause the airbag system to unexpectedly deploy during servicing, possibly leading to a serious accident.
Further, if a mistake is made in servicing the airbag system, it is possible the airbag may fail to operate when required.
Before performing servicing (including removal or installation of parts, inspection or replacement), be sure to read the following items carefully, then follow the correct procedure described in this manual.

Locations of Airbag Components

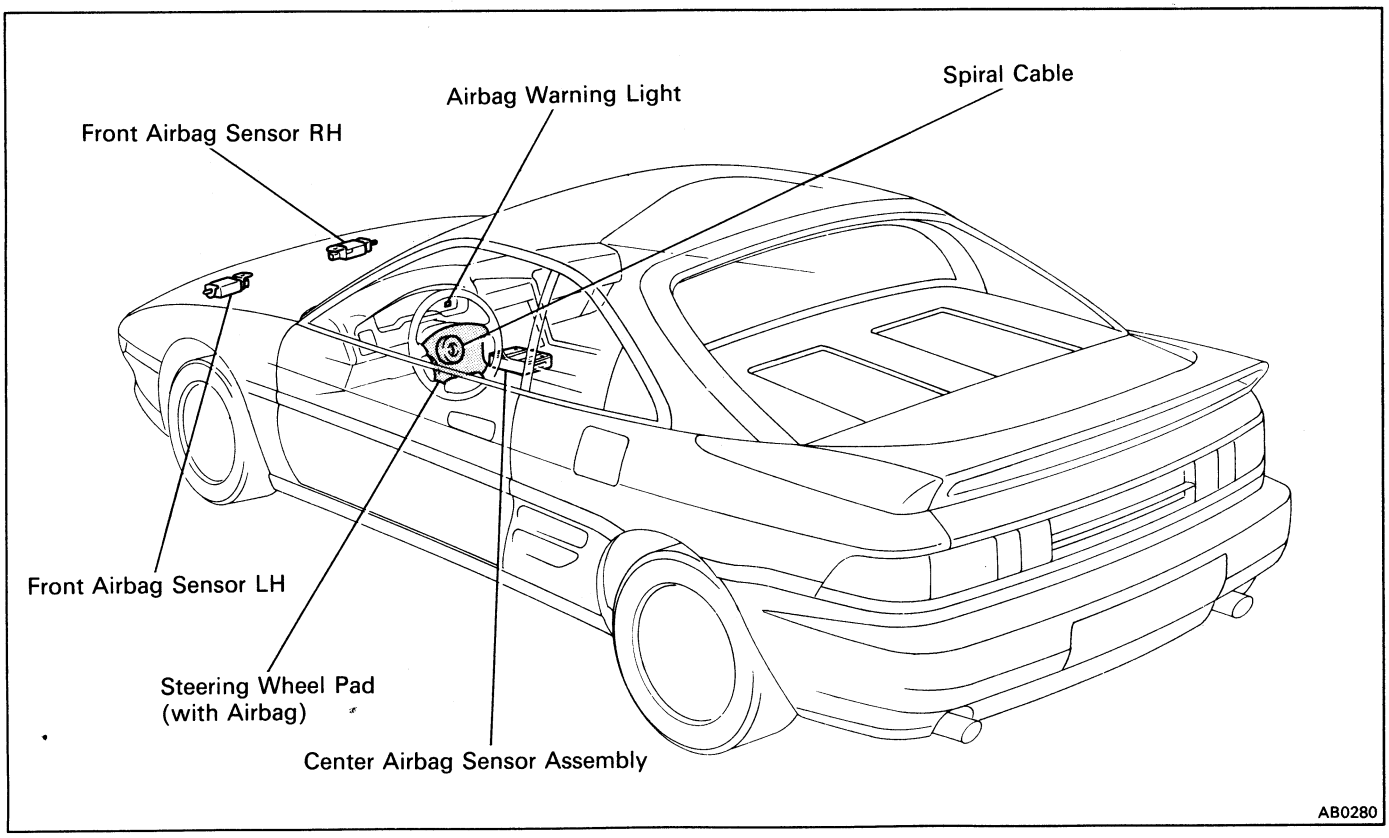

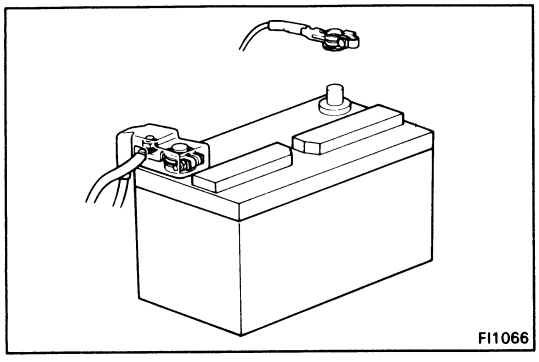

1. Malfunction symptoms of the airbag system are difficult to confirm, so the diagnostic codes become the most important source of information when troubleshooting. When troubleshooting the airbag system, always inspect the diagnostic codes before disconnecting the battery (See page AB-24).
2. **Work must be started after approx. 20 seconds or loner from the time the ignition switch is turned to the LOCK position and the negative (–) terminal cable is disconnected from the battery.**
   (The airbag system is equipped with a back-up power source so that if work is started within 20 seconds of disconnecting the negative (–) terminal cable of the battery, the airbag may be deployed.)

When the negative (–) terminal cable is disconnected from the battery, memory of the clock and audio systems will be cancelled. So before starting work, make a record of the contents memorized by the audio memory system. Then when work is finished, reset the audio system as before and adjust the clock. To avoid erasing the memory of each memory system, never use a back-up power supply from outside the vehicle.

3. Even in cases of a minor collision where the airbag does not deploy, the front airbag sensors and the steering wheel pad should be inspected (See page AB-11).
4. Never use airbag parts from another vehicle. When replacing parts, replace them with new parts.
5. Before repairs, remove the airbag sensors if shocks are likely to be applied to the sensors during repairs.
6. The center airbag sensor assembly contains mercury. After performing replacement, do not destroy the oil part. When scrapping the vehicle or replacing the center airbag sensor assembly itself, remove the center airbag sensor assembly and dispose of it as toxic waste.
7. Never disassemble and repair the front airbag sensors, center airbag sensor assembly or steering wheel pad in order to reuse it.
8. If the front airbag sensors, center airbag sensor assembly or steering wheel pad have been dropped, or if there are cracks, dents or other defects in the case, bracket or connector, replace them with new ones.
9. Do not expose the front airbag sensors, center airbag sensor assembly or steering wheel pad directly to hot air or flames.
10. Use a volt/ohmmeter with high impedance (10 kΩ/V minimum) for troubleshooting of the electrical circuit.
11. Information labels are attached to the periphery of the airbag components. Follow the instructions on the notices.
12. After work on the airbag system is completed, perform the airbag warning light check (See page AB-29).

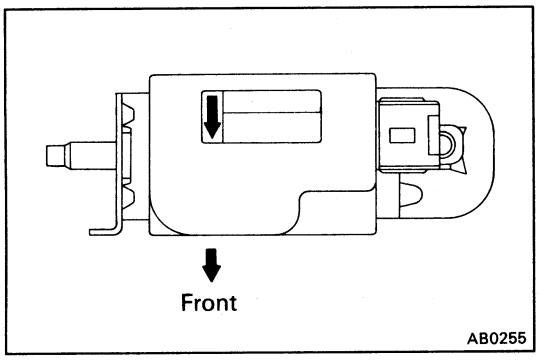

FRONT AIRBAG SENSOR

1. Never reuse the front airbag sensors involved in a collision when the airbag has deployed. (Replace both the left and right airbag sensors.)
2. Install the front airbag sensor with the arrow on the sensor facing toward the front of the vehicle.
3. The front airbag sensor set bolts and nuts have been anti-rust treated.
   When the sensor is removed, always replace the set bolts and nuts with new ones.
4. The front airbag sensor is equipped with an electrical connection check mechanism. Be sure to lock this mechanism securely when connecting the connector. If the connector is not securely locked, a malfunction code will be detected by the diagnosis system (See page AB-9).

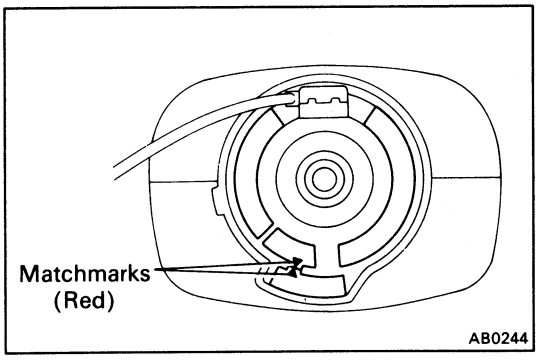

SPIRAL CABLE (IN COMBINATION SWITCH)

The steering wheel must be fitted correctly to the steering column with the spiral cable at the neutral position; otherwise cable disconnection and other troubles may result. Refer to page AB-16 of this manual concerning correct steering wheel installation.

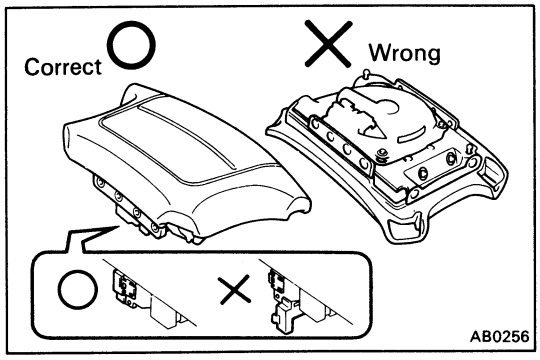

STEERING WHEEL PAD (WITH AIRBAG)

1. **When removing the steering wheel pad or handling a new steering wheel pad, it should be placed with the pad top surface facing up.**

   In this case, the twin-lock type connector lock lever should be in the locked state and care should be taken to place it so the connector will not be damaged. And do not store a steering wheel pad on top of another one. (Storing the pad with its metallic surface up may lead to a serious accident if the airbag inflates for some reason.)
2. **Never measure the resistance of the airbag squib. (This may cause the airbag to deploy, which is very dangerous.)**

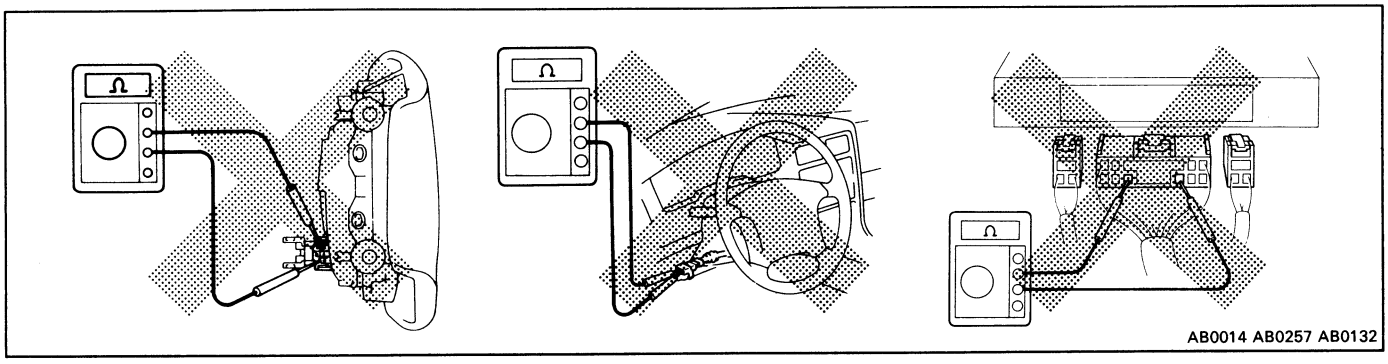

3. Grease should not be applied to the steering wheel pad and the pad should not be cleaned with detergents of any kind.
4. Store the steering wheel pad where the ambient temperature remains below 90°C (200°F), without high humidity and away from electrical noise.
5. When using electric welding, first disconnect the airbag connector (yellow color and 2 pins) under the steering column near the combination switch connector before starting work.
6. **When disposing of a vehicle or the steering wheel pad alone, the airbag should be deployed using an SST before disposal (See page AB-82). Perform the operation in a place away from electrical noise.**

CENTER AIRBAG SENSOR ASSEMBLY

The connectors to the center airbag sensor assembly should be connected or disconnected with the sensor mounted on the floor. If the connectors are connected or disconnected while the center airbag sensor assembly is not mounted to the floor, it could cause undersired ignition of the airbag system.

WIRE HARNESS AND CONNECTOR

The airbag system's wire harness is integrated with the cowl wire harness assembly. The wires for the airbag wire harness are encased in a yellow corrugated tube. All the connectors for the system are also a standard yellow color. If the airbag system wire harness becomes disconnected or the connector becomes broken due to an accident, etc., repair or replace it as shown on page AB-21.

PRECAUTIONS FOR VEHICLES EQUIPPED WITH A CATALYTIC CONVERTER

CAUTION: If large amounts of unburned gasoline flow into the converter, it may overheat and create a fire hazard. To prevent this, observe the following precautions and explain them to your customer.

1. **Use only unleaded gasoline.**
2. **Avoid prolonged idling.**

   Avoid running the engine at idle speed for more than 20 minutes.
3. **Avoid spark jump test.**
   (a) Spark jump test only when absolutely necessary. Perform this test as rapidly as possible.
   (b) While testing, never race the engine.
4. **Avoid prolonged engine compression measurement.**

   Engine compression tests must be made as rapidly as possible.
5. **Do not run engine when fuel tank is nearly empty.**

   This may cause the engine to misfire and create an extra load on the converter.
6. **Avoid coasting with ignition turned off and prolonged braking.**
7. **Do not dispose of used catalyst along with parts contaminated with gasoline or oil.**

PRECAUTIONS FOR VEHICLES WITH AN AUDIO SYSTEM WITH BUILT-IN ANTI-THEFT SYSTEM

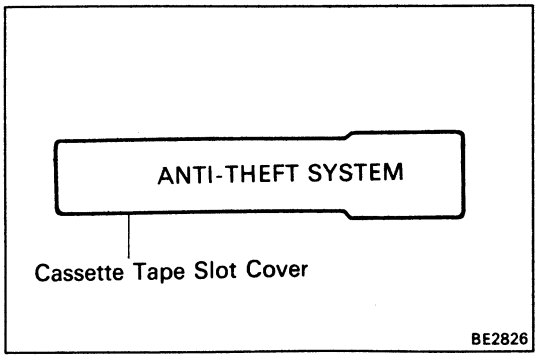

Audio Systems displaying the sign "ANTI-THEFT SYSTEM" shown on the left has a built-in anti-theft system which makes the audio system soundless if stolen.
If the power source for the audio system is cut even once, the anti-theft system operates so that even if the power source is reconnected, the audio system will not produce any sound unless the ID number selected by the customer is input again. Accordingly, when performing repairs on vehicles equipped with this system, before disconnecting the battery terminals or removing the audio system the customer should be asked for the ID number so that the technician can input the ID number afterwards, or else a request made to the customer to input the ID number.
For the method to input the ID number or cancel the anti-theft system, refer to the Owner's Manual.

VEHICLE LIFT AND SUPPORT LOCATIONS

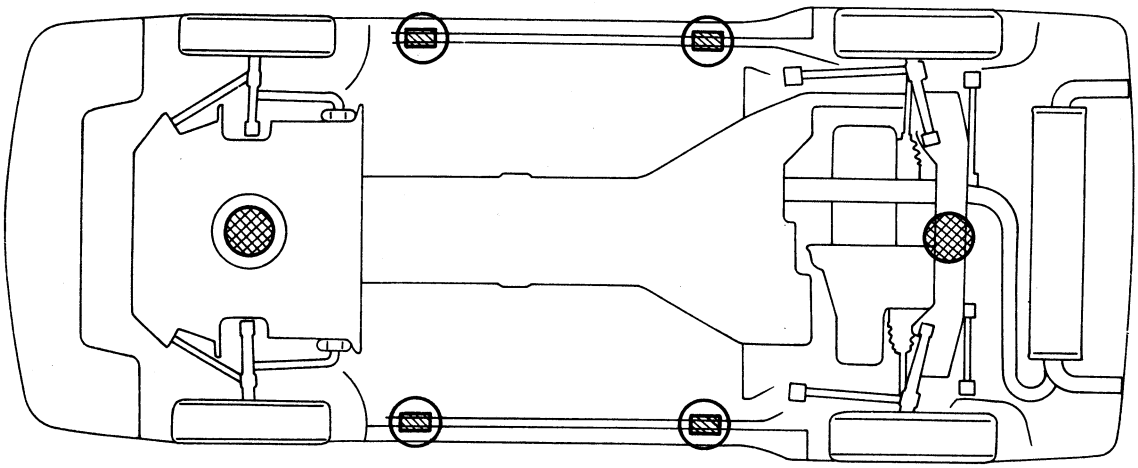

Front ⬅

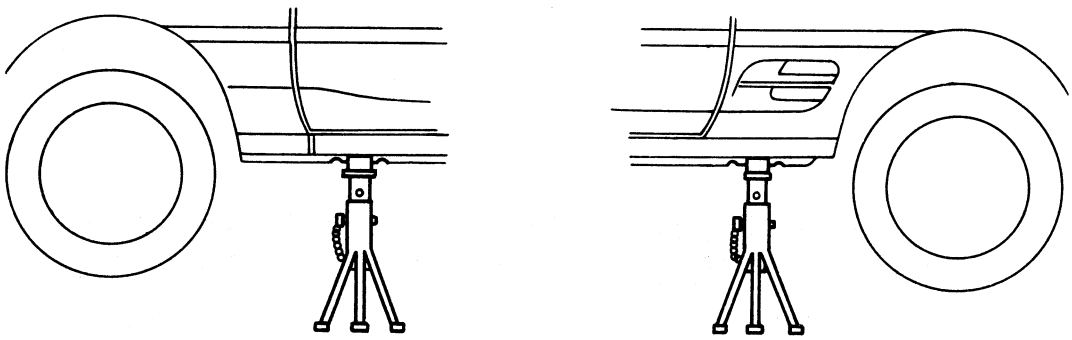

JACK POSITION

Front .... Jack up support of front under cover center
Rear ..... Rear suspension crossmember

PANTOGRAPH JACK POSITION

SUPPORT POSITION

Safety stand .....

IN0299
IN0300

ABBREVIATIONS USED IN THIS MANUAL

ABS	Anti-Lock Brake System
A/C	Air Conditioner
Approx.	Approximately
A/T	Automatic Transaxle
ATF	Automatic Transmission Fluid
B_1	Second Coast Brake
B_2	Second Brake
B_3	First and Reverse Brake
B_4	Underdrive Brake
BTDC	Before Top Dead Center
BVSV	Bimetal Vacuum Switching Valve
C_1	Forward Clutch
C_2	Direct Clutch
C_3	Underdrive Clutch
CALIF.	Vehicles Sold in California
CB	Circuit Breaker
CD	Compact Disc
DP	Dash Pot
ECT	Electronic Controlled Transaxle
ECU	Electronic Control Unit
EFI	Electronic Fuel Injection
EGR	Exhaust Gas Recirculation
ELR	Emergency Locking Retractor
ESA	Electronic Spark Advance
EVAP	Evaporative (Emission Control)
EX	Exhaust (manifold, valve)
Ex.	Except
F_1	No.1 One-Way Clutch
F_2	No.2 One-Way Clutch
F_3	Underdrive One-Way Clutch
FIPG	Formed in Place Gasket
FL	Fusible Link
FR, Fr	Front
IN	Intake (manifold, valve)
IG	Ignition
ISC	Idle Speed Control
J/B	Junction Block
LED	Light Emitting Diode
LH	Left-Hand
Max.	Maximum
MP	Multipurpose
M/T	Manual Transaxle
OD, O/D	Overdrive
O/S	Oversize
P & BV	Proportioning and Bypass Valve
PCV	Positive Crankcase Ventilation
PS	Power Steering
RH	Right-Hand
Rr	Rear
SRS	Supplemental Restraint System
SSM	Special Service Materials
SST	Special Service Tools
STD	Standard
SW	Switch
TDC	Top Dead Center
T-VIS	Toyota-Variable Induction System
TWC	Three-Way Catalyst
U/D	Underdrive
U/S	Undersize
VSV	Vacuum Switching Valve
w/	With
w/o	Without

MAINTENANCE

	Page
MAINTENANCE SCHEDULE	MA-2
MAINTENANCE OPERATIONS	MA-4
GENERAL MAINTENANCE	MA-14

GENERAL NOTES:

- The maintenance schedule for the vehicle consists of separate A and B schedules which are applicable depending on the conditions the vehicle is used in. Confirm the vehicle's usage conditions, select the appropriate schedule and service the vehicle accordingly.
- Every service item in the periodic maintenance list must be performed.
- Next to the columns of periods in the schedule, reference pages have been added for easy access to service data and procedures necessary for each position.
- Periodic maintenance service must be performed according to whichever interval in the periodic maintenance list occurs first, the odometer reading (miles) or the times interval (months).
- Maintenance services after the last period should be performed at the same interval as before unless otherwise noted.
- Failure to do even one item can cause the engine to run poorly and increase exhaust emissions.

MAINTENANCE SCHEDULE

SCHEDULE A

Maintenance operation: A = Check and adjust if necessary;
R = Replace, change or lubricate;
I = Inspect and correct or replace if necessary

CONDITIONS:

- Towing a trailer, using a camper or car top carrier.
- Repeated short trips les than 5 miles (8 km) and outside temperatures remain below freezing.
- Extensive idling and /or speed driving for long distance such as police, taxi or door-to-door delivery use.
- Operating on dusty, rough, muddy or salt spread roads.

System	Service interval (Odometer reading or months, whichever comes first) / Maintenance items		Maintenance services beyond 60,000 miles (96,000 km) should continue to be performed at intervals shown for each maintenance schedule.																	See page (item No.)
		Miles x 1,000	3.75	7.5	11.25	15	18.75	22.5	26.25	30	33.75	37.5	41.25	45	48.75	52.5	56.25	60	Months	
		km x 1,000	6	12	18	24	30	36	42	48	54	60	66	72	78	84	90	96		
ENGINE	Timing belt (1)																	R	–	MA-4 (item 1)
	Valve clearance																	A	A: Every 72 months	MA-7 (item 12)
	Drive belt		I: First period, 60,000 miles (96,000 km) or 72 months. I: After that every 7,500 miles (12,000 km) or 12 months.																	MA-4 (item 2)
	Engine oil★	3S-GTE engine	R. Every 2,500 miles (4,500 km) or 3 months																	MA-6 (item 6)
		5S-FE engine	R	R	R	R	R	R	R	R	R	R	R	R	R	R	R	R	R: Every 6 months	MA-6 (item 6)
	Engine oilfilter★	3S-GTE engine	R. Every 5,000 miles (8,000 km) or 6 months																	MA-6 (item 6)
		5S-FE engine	R	R	R	R	R	R	R	R	R	R	R	R	R	R	R	R	R: Every 6 months	MA-6 (item 6)
	Engine coolant		R: First period, 45,000 miles (72,000 km) or 36 months. R: After that every 30,000 miles (48,000 km) or 24 months																	MA-6 (item 6)
	Exhaust pipes and mountings					I				I				I				I	I: Every 24 months	MA-7 (item 11)
FUEL	Air Filter(2)★*	3S-GTE engine	I: Every 5,000 miles (8,000 km) or 6 months R: Every 30,000 miles (48,000 km) or 36 months																	MA-4 (item 3, 4)
		5S-FE engine	I	I	I	I	I	I	I	R	I	I	I	I	I	I	I	R	I: Every 24 months R: Every 36 months	MA-4 (item 3, 4)
	Fuel lines and connections (3)									I								I	I: Every 36 months	MA-7 (item 10)
	Fuel tank cap gasket																	R	R: Every 72 months	MA-7 (item 9)
IGNITION	Spark plug	3S-GTE engine																R	R: Every 72 months	MA-5 (item 5)
		5S-FE engine★*								R								R	R: Every 36 months	MA-5 (item 5)
EVAP	Charcoal canister																	I	I: Every 72 months	MA-7 (item 8)
BRAKES	Brake pads and discs (Front and rear)			I		I		I		I		I		I		I		I	I: Ever 12 months	MA-8 (item 14)
	Brake line pipes and hoses					I				I				I				I	I: Ever 24 months	MA-8 (item 13)
CHASSIS	Steering linkage			I		I		I		I		I		I		I		I	I: Ever 12 months	MA-9 (item 15)
	SRS airbag		I: First period, 10 years. I: After every 2 years.																	MA-9 (item 16)
	Drive shaft boots			I		I		I		I		I		I		I		I	I: Ever 12 months	MA-10 (item 18)
	Manual transaxle, automatic transaxle and differential					R				R				R				R	R: Ever 24 months	MA-10 (item 20, 21)
	Steering gear housing oil (6)					I				I				I				I	I: Ever 24 months	MA-9 (item 15)
	Bolts and nuts on chassis and body (7)			I		I		I		I		I		I		I		I	I: Ever 12 months	MA-12 (item 22)

★ and * mark indicates maintenance which is part of the warranty conditions for the engine control system. the warranty period is in accordance with the owner's guide or the warranty booklet. (★: California specification vehicles *: Other specification vehicles)

(1) Applicable to vehicles operated under conditions extensive idling and /or low speed driving for long distances such as police, taxi or door-to-door delivery use.

(2) Applicable when operating mainly on dusty road. If not, apply SCHEDULE B.

(3) Includes inspection of fuel tank bank and vapor vent system.

(4) Check for leakage.

(5) Check for oil leaks from steering gear housing.

(6) Applicable only when operating mainly on rough, muddy rods. The applicable parts are listed below. For other usage conditions, refer to SCHEDULE B.
- Front and rear suspention member to cross body
- Strut bar bracket to body bolts
- Bolts for sheet installation

SCHEDULE B

CONDITIONS: Conditions other than those listed for SCHEDULE A.

System	Service interval (Odometer reading or months. Whichever comes first) / Maintenance items		Maintenance service beyond 60,000 miles (96,000 km) should continue to be performed at the same intervals shown for each maintenance schedule.									See page (item No.)
		Miles x 1,000	7.5	15	22.5	30	37.5	45	52.5	60	Months	
		km x 1,000	12	24	36	48	60	72	84	96		
ENGINE	Valve clearance									A	A: Every 72 months	MA-7 (item 12)
	Drive belt		I: First period, 60,000 miles (96,000 kn) or 72 months. I: After that every 7,500 miles (12,000 km) or 12 months.									MA-4 (item 2)
	Engine oil★	3D-GTE engine	R: Every 5,000 miles 8,000 km) or 6 months.									MA-6 (item 6)
		5S-FE engine	R	R	R	R	R	R	R	R	R: Every 12 months	MA-6 (item 6)
	Engine oilfilter★	3S-GTE engine	R: Every 10,000 miles (16,000 km) or 12 months.									MA-6 (item 6)
		5S-FE engine	R	R	R	R	R	R	R	R	R: Every 12 months	MA-6 (item 6)
	Engine coolant		R: First period, 45,000 miles (72,000 km) or 36 months. R: After that every 30,000 miles (48,000 km) or 24 months.									MA-6 (item 7)
	Exhaust pipes and mountings					I				I	I: Every 36 months	MA-7 (item 11)
FUEL	Air filter★*					R				R	R: Every 36 months	MA-4 (item 3, 4)
	Fuel lines and connections(1)					I				I	I: Every 36 months	MA-7 (item 10)
	Fuel tank cap gasket									R	R: Every 72 months	MA-7 (item 9)
IGNITION	Speak plugs	3S-GTE engine								R	R: Every 72 months	MA-5 (item 5)
		5S-FE engine**				R				R	R: Every 36 months	MA-5 (item 5)
EVAP	Charcoal canister									I	I: Every 72 months	MA-7 (item 8)
BRAKES	Brake pads and discs (Front and rear)			I		I		I		I	I: Every 24 months	MA-8 (item 14)
	Brake line pipes and hoses			I		I		I		I	I: Every 24 months	MA-8 (item 13)
CHASSIS	Steering linkage			I		I		I		I	I: Every 24 months	MA-9 (item 15)
	SRS airbag		I: First period, 10 years. I: After that every 2 years.									MA-9 (item 16)
	Drive shaft boots			I		I		I		I	I: Every 24 months	MA-10 (item 18)
	Ball joints and dust covers			I		I		I		I	I: Every 24 months	MA-10 (item 19)
	Manual transaxle, automatic transaxle and differential (2)			I		I		I		I	I: Every 24 months	MA-10 (item 20, 21)
	Steering gear housing oil(3)			I		I		I		I	I: Every 24 months	MA-9 (item 15)
	Bolts and nuts on chassis and body(4)			I		I		I		I	I: Every 24 months	MA-12 (item 22)

★and* mark indicates maintenance which is part of the warranty conditions for the engine control system. The warranty period is in accordance with the owner's guide or the warranty booklet.
(★: California specification vehicle *: Other specification vehicles)

(1) Includes inspection of fuel tank band and vapor vent system.

(2) Check for leakage.

(3) Check for oil leaks from steering gear housing.

(4) The Applicable part are listed below.
- Front and rear suspension member to cross body
- Strut bar bracket to body body bolt
- Bolts for sheet installation

MAINTENANCE OPERATIONS

ENGINE

Cold Engine Operations

1. REPLACE TIMING BELT

(a) Remove the timing belt.
3S-GTE (See pages EM-26 to 31)
5S-FE (See pages EM-47 to 52)

(b) Install the timing belt.
3S-GTE (See pages EM-35 to 41)
5S-FE (See pages EM-55 to 60)

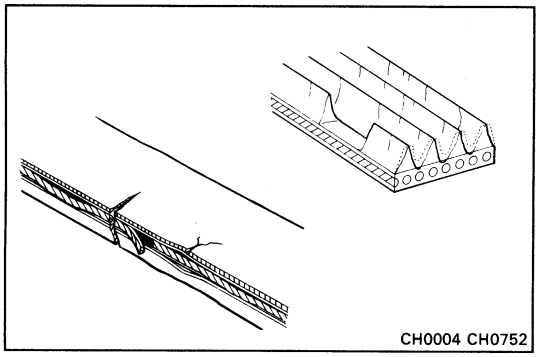
CH0004 CH0752

2. INSPECT DRIVE BELT

(a) Visually check the drive belt for excessive wear, frayed cords etc.

If necessary, replace the drive belt.

HINT: Cracks on the ribbed side of a drive belt are considered acceptable. If the drive belt has chunks missing from the ribs, it should be replaced.

(b) Using a belt tension gauge, measure the drive belt tension.

Belt tension gauge:
Nippondenso BTG-20 (95506-00020)
Borroughs No.BT-33-73F

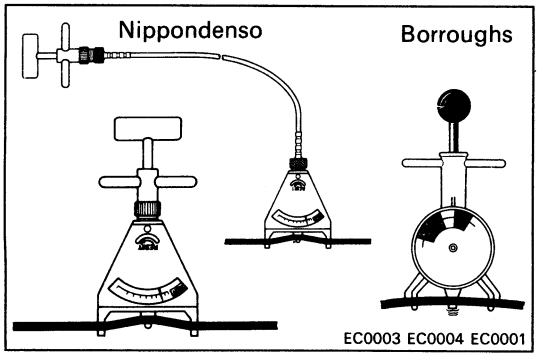

EC0003 EC0004 EC0001

Drive belt tension:

Alternator	**New belt**	**120 ± 20 lb**
	Used belt	**104 ± 20 lb**
A/C compressor	**New belt**	**160 ± 25 lb**
	Used belt	**100 ± 20 lb**

If necessary, adjust the drive belt tension.

HINT:

- "New belt" refers to a belt which has been used 5 minutes or less on a running engine.
- "Used belt" refers to a belt which has been used on a running engine for 5 minutes or more.
- After installing the belt, check that it fits properly in the ribbed grooves.
- Check by hand to confirm that the belt has not slipped out of the groove on the bottom of the pulley.
- After installing a new belt, run the engine for about 5 minutes and recheck the belt tension.

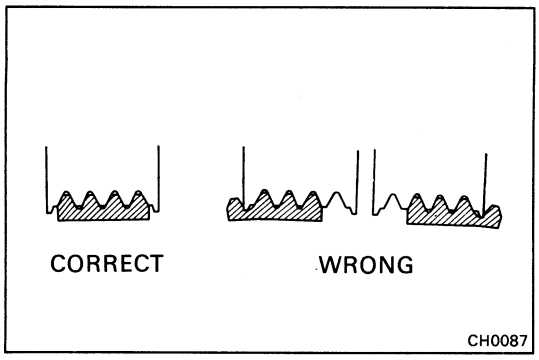

CH0087

3. INSPECT AIR FILTER

(a) Visually check that the air cleaner element is not excessively, damaged or oily.

If necessary, replace the air cleaner element.

(b) Clean the element with compressed air.
First blow from the inside thoroughly, then blow off the outside of the element.

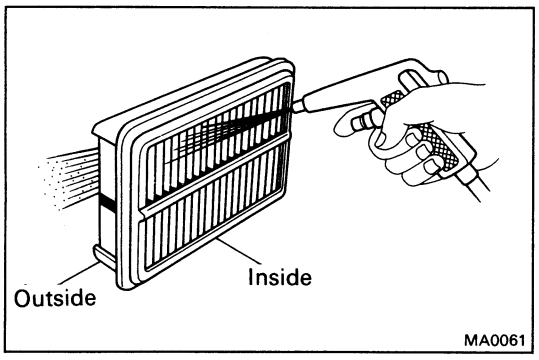

MA0061

4. REPLACE AIR FILTER

Replace the air cleaner element with a new one.

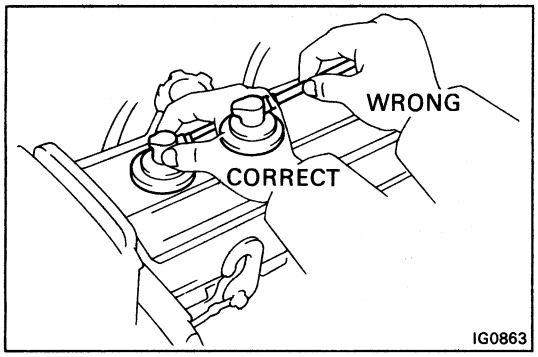

5. REPLACE SPARK PLUGS

(a) Disconnect the spark plug cords at the rubber boot. DO NOT pull on the cords.

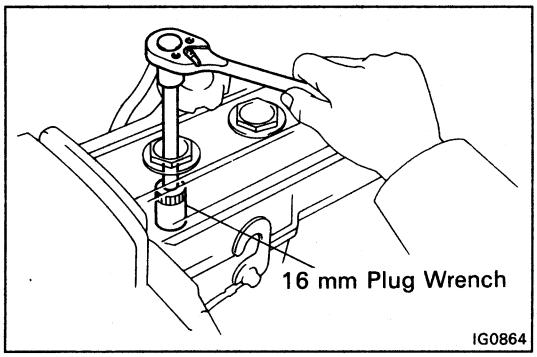

(b) Using a 16 mm plug wrench, remove the spark plugs.

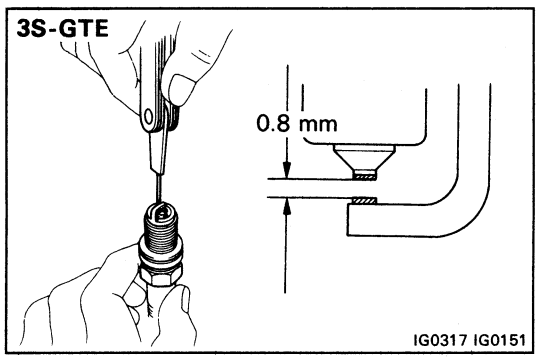

(c) (3S-GTE)
Check the electrode gap of new spark plugs.

Correct electrode gap: **0.8 mm (0.031 in.)**

Recommended spark plugs: **ND PK20R8**
NGK BKR6EP8

HINT: If adjusting the gap of a new spark plug, bend only the base of the ground electrode. DO NOT touch the tip.

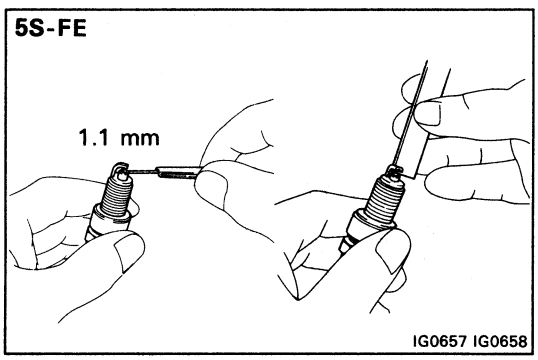

(d) (5S-FE)
Adjust the electrode gap of new spark plugs.

Correct electrode gap: **1.1 mm (0.043 in.)**

Recommended spark plugs: **ND K16R-U11**
NGK BKR5EYA11

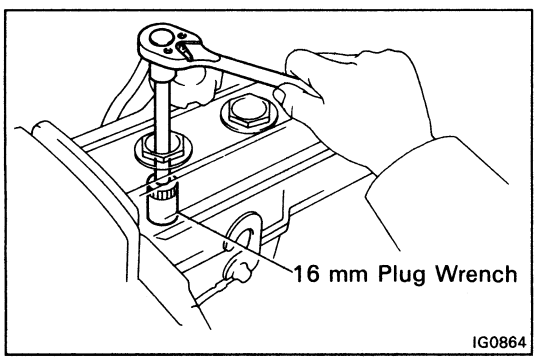

(e) Using a 16 mm plug wrench, install the spark plugs.

Torque: 180 kg-cm (13 ft-lb, 18 N·m)

(f) Connect the spark plug cords.

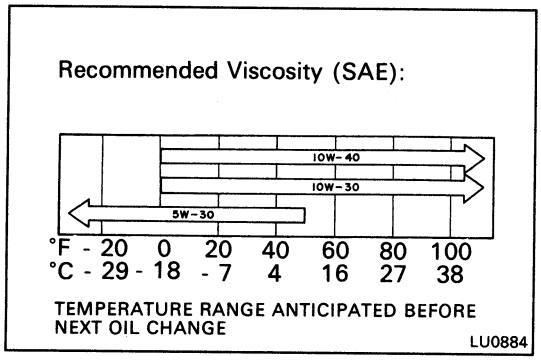

6. REPLACE ENGINE OIL AND OIL FILTER
(See page LU-7)

Oil grade: API grade SG, multigrade viscosity and fuel-efficient oil

Drain and refill capacity (3S-GTE):
w/ Oil filter change
3.9 liters (4.1 US qts, 3.4 Imp. qts)
w/o Oil filter change
3.6 liters (3.8 US qts, 3.2 Imp. qts)

Drain and refill capacity (5S-FE):
w/ Oil filter change
4.2 liters (4.4 US qts, 3.7 Imp. qts)
w/o Oil filter change
3.8 liters (4.0 US qts, 3.3 Imp. qts)

7. REPLACE ENGINE COOLANT
(See page CO-5)

HINT:
- Used a good brand of ethylene-glycol base coolant, mixed according to the manufacturer's instructions.
- Using coolant which has more than 50 % ethylene-glycol (but not more 70 %) is recommended.

NOTICE:
- **Do not use as alcohol type coolant.**
- **The coolant should be mixed with demineralized water or distilled water.**

Coolant capacity (w/ Heater):
3S-GTE 13.6 liters (14.4 US qts, 12.0 Imp. qts)
5S-FE 13.0 liters (13.7 US qts, 11.4 Imp. qts)

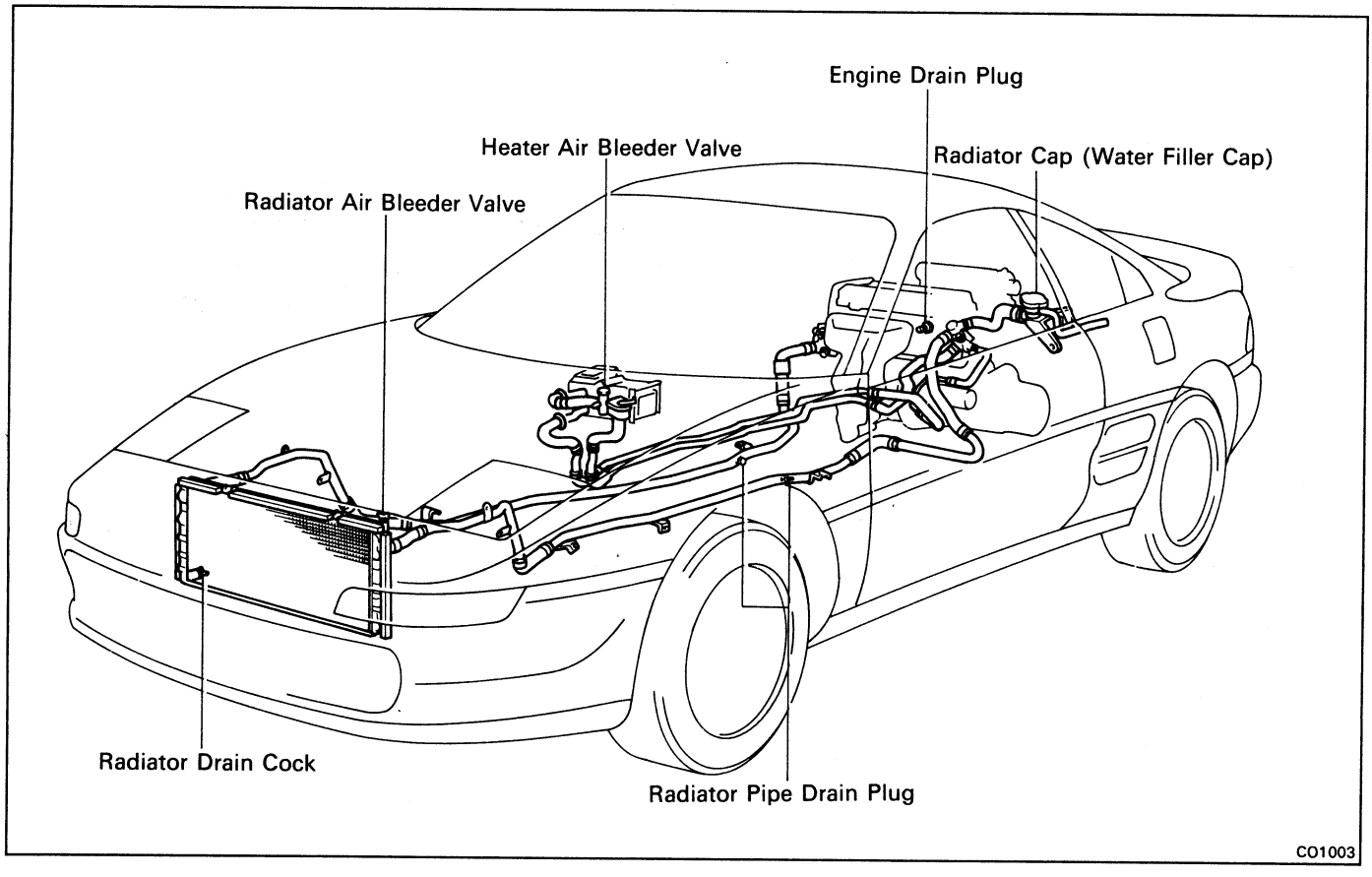

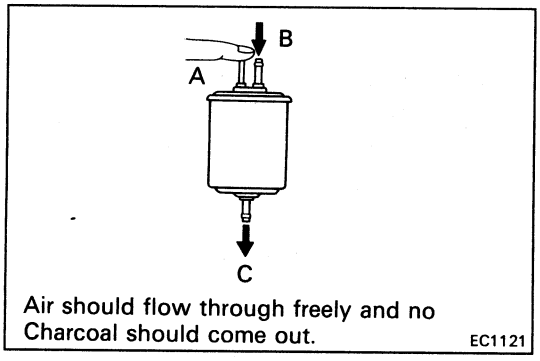

Air should flow through freely and no Charcoal should come out. EC1121

8. INSPECT CHARCOAL CANISTER

(a) Disconnect the hoses from the charcoal canister. Label hoses for correct installation.

(b) Plug port A with your finger, and blow compressed air (3 kg/cm, 43 psi or 294 kPa) through port B (fuel tank side).

- Check that air comes out of the bottom port C without resistance.
- Check that no activated charcoal comes out.

If necessary, replace the charcoal canister.

NOTICE: Do not attempt to wash the charcoal.

(c) Reconnect the hoses to the charcoal canister.

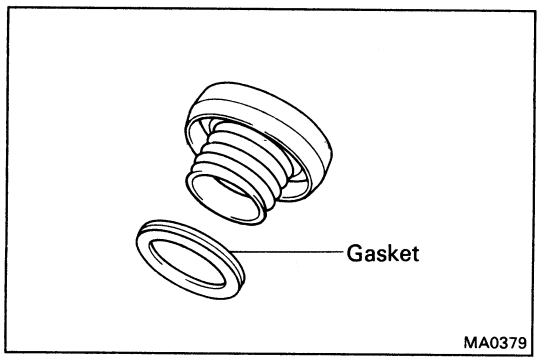

MA0379

9. REPLACE GASKET IN FUEL TANK CAP

(a) Remove the old gasket from the tank cap.

NOTICE: Do not damage the tank cap.

(b) Install a new gasket by hand.

(c) Check the cap for damage or cracks.

(d) Install the cap and check the torque limiter.

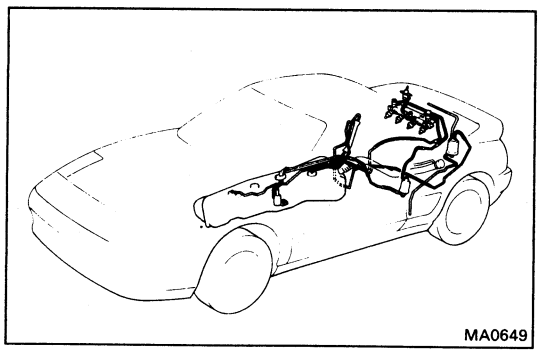
MA0649

10. INSPECT FUEL LINES AND CONNECTIONS

Visually check the fuel lines for cracks, leakage, loose connections, deformation or tank band looseness.

11. INSPECT EXHAUST PIPES AND MOUNTINGS

Visually check the pipes, hangers and connections for severe corrosion, leaks or damage.

12. ADJUST VALVE CLEARANCE

3S-GTE (See page EM-11)
5S-FE (See page EM-16)

Valve clearance (Cold):

3S-GTE	**Intake**	**0.15 – 0.25 mm (0.006 – 0.010 in.)**
	Exhaust	**0.20 – 0.30 mm (0.008 – 0.012 in.)**
5S-FE	**Intake**	**0.19 – 0.29 mm (0.007 – 0.011 in.)**
	Exhaust	**0.28 – 0.38 mm (0.011 – 0.015 in.)**

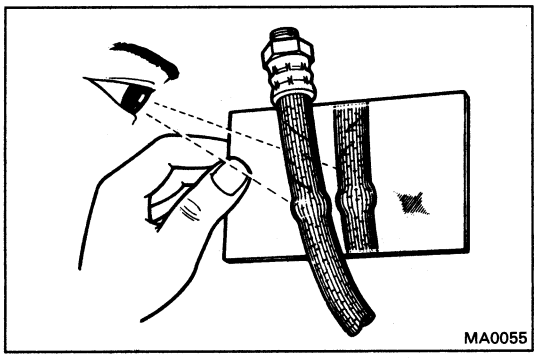
MA0055

BRAKES

13. INSPECT BRAKE LINE PIPES AND HOSES

HINT: Check in a well lighted area. Check the entire circumference and length of the brake hoses using a mirror as required. Turn the front wheels fully right or left before checking the front brake.

(a) Check all brake lines and hoses for:
- Damage
- Wear
- Deformation
- Cracks
- Corrosion
- Leaks
- Bends
- Twists

(b) Check all clamps for tightness and connections for leakage.

(c) Check that the hoses and lines are clear of sharp edges, moving parts and the exhaust system.

(d) Check that the lines installed in grommets pass through the center of the grommets.

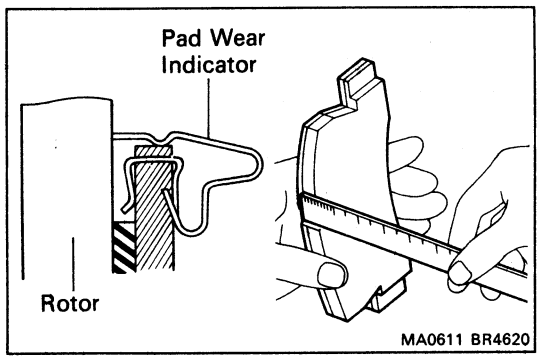

MA0611 BR4620

14. INSPECT BRAKE PADS AND DISCS

(a) Check the thickness of the disc brake pads and check for irregular wear.

Minimum pad thickness: 1.0 mm (0.039 in.)

HINT: If a squealing or scraping noise comes from the brake during driving, check the pad wear indicator to see if it is contacting the disc rotor. If so, the disc pad should be replaced.

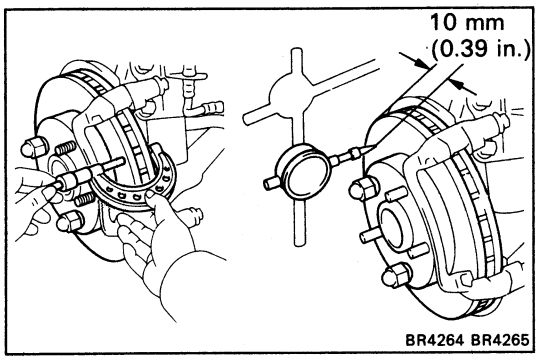

BR4264 BR4265

(b) Check the disc for wear or runout.

Minimum disc thickness:

Front	**24.0 mm (0.787 in.)**
Rear	**15.0 mm (0.590 in.)**

Maximum disc runout:

Front	**0.07 mm (0.0028 in.)**
Rear	**0.10 mm (0.0039 in.)**

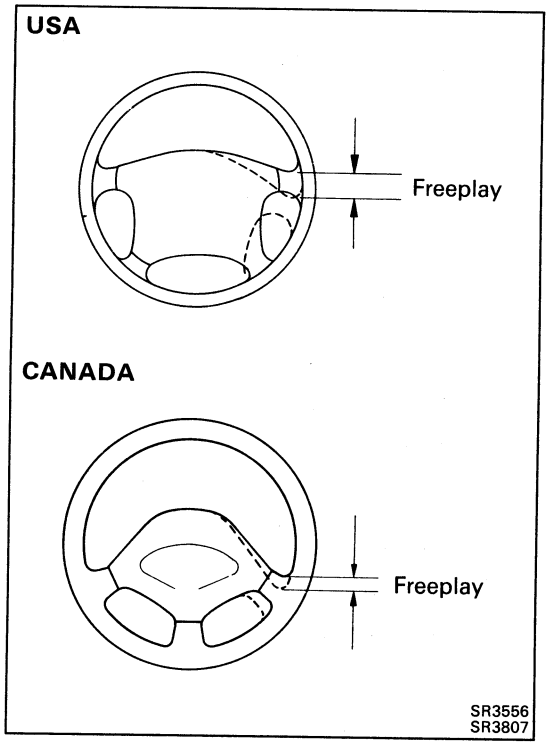

CHASSIS

15. INSPECT STEERING LINKAGE

(a) Check the steering wheel freeplay.

Maximum steering wheel freeplay: 30 mm (1.18 in.)

With the vehicle stopped and pointed straight ahead, rock the steering wheel gently back and forth with light finger pressure.

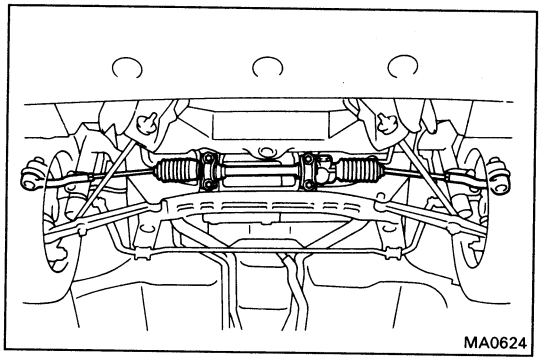

(b) Check the steering linkage for looseness or damage.

Check that:

- Tie rod ends do not have excessive play.
- Dust seals and boots are not damaged.
- Boot clamps are not loose.

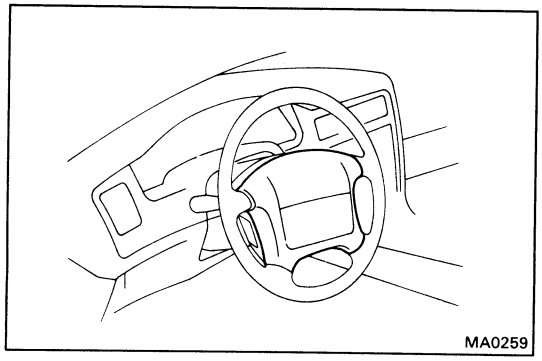

16. INSPECT SRS AIRBAG

Visually check the steering wheel pad (airbag and inflater).

- Use the diagnosis check to check if there are abnormalities.
- Check that there are no cuts, cracks or noticeable color changes on the surface of the steering wheel pad or in the center groove of the pad.
- Remove the steering wheel pad from the vehicle and check the wiring and steering wheel for damage and corrosion due to rusting, etc.

If necessary, replace the pad.

CAUTION:

- **For removal and replacement of the steering wheel pad, see page AB-15 and be sure to perform the operation in the correct order.**
- **Before disposing of the steering wheel pad, the airbag must first be deployed by using an SST (see page AB-82).**

17. INSPECT STEERING GEAR HOUSING OIL

Check the steering gear box for oil leakage.

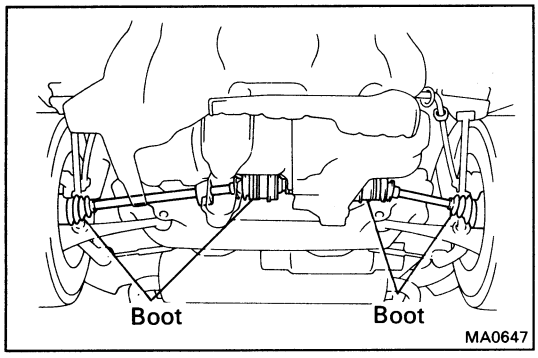

18. INSPECT DRIVE SHAFT BOOTS

Check the drive shaft boots for clamp looseness, leakage or damage.

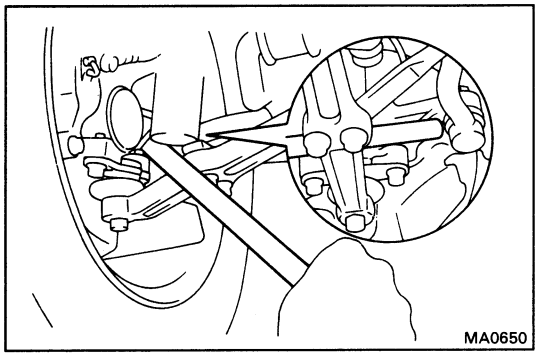

19. INSPECT BALL JOINTS AND DUST COVERS

(a) Inspect the ball joints for excessive looseness.

- Jack up the front of the vehicle and place wooden blocks with a height of 180 – 200 mm (7.09 – 7.87 in.) under the front tires.
- Lower the jack until there is about half a load on the front coil springs. Place stands under the vehicle for safety.
- Check that the front wheels are in a straight forward position, and block them with chocks.
- Using a lever, pry up the end of the lower arm, and check the amount of play.

Maximum ball joint vertical play: 0 mm (0 in.)

If there is play, replace the ball joint.

(b) Check the dust cover for damage.

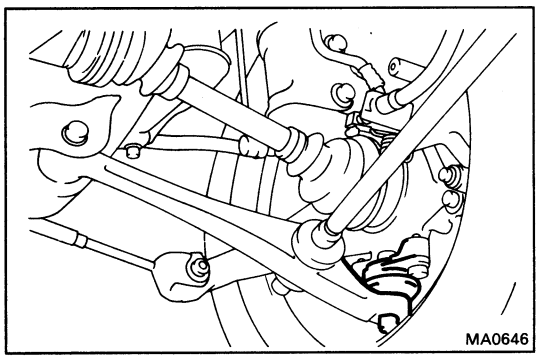

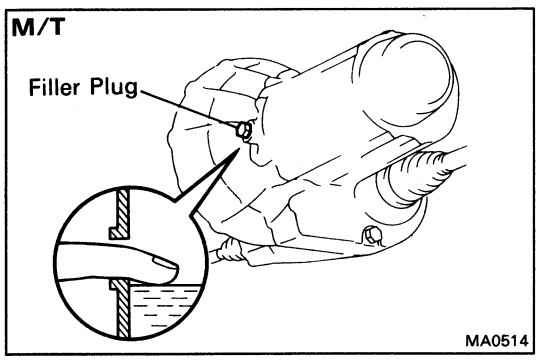

20. CHECK TRANSAXLE FLUID

A. (M/T)

Check manual transaxle oil (fluid)

(a) Visually check the transaxle for oil (fluid) leakage.

If leakage is found, check for the cause and repair.

(b) Remove the filler plug and feel inside the hole with your finger. Check that the oil (fluid) comes to within 5 mm (0.20 in.) of the bottom edge of the filler hole.

If the level is low, add oil (fluid) until it begins to run out the filler hole.

Transaxle oil (3S-GTE): See item 21 (A)

Transaxle fluid (5S-FE): See item 21 (A)

(c) Reinstall the filler plug securely.

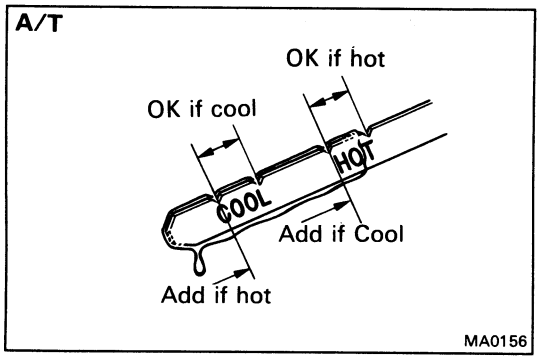

B. **(A/T)**
Check automatic transaxle fluid

(a) Visually check the transaxle for fluid leakage.

If leakage is found, check for the cause and repair.

(b) Check the fluid level

If the level is low, add fluid.

Transmission fluid: See item 21 (B)

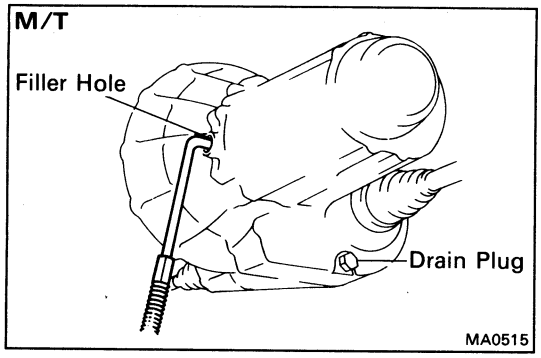

21. REPLACE TRANSAXLE OIL (FLUID)

A. **(M/T)**
Replace transaxle oil (fluid)

(a) Remove the filler and drain plugs, and drain the oil (fluid).

(b) Reinstall the drain plug securely.

(c) Add new oil (fluid) until it begins to run out of the filler hole.

(3S-GTE)

Transaxle oil: **Transaxle oil E50 (088885-80206) or equivalent**

Recommended transaxle oil:

Oil grade: **API GL-5**

Viscosity: **SAE 75W-90 or 80W-90**
Above – 18°C (0°F) SAE 90
Below – 18°C (0°F) SAE 80W

Capacity: **4.2 liters (4.4 US qts, 3.7 Imp. qts)**

(5S-FE)

Transaxle fluid: **ATF DEXRON II**

Capacity: **2.6 liters (2.7 US qts, 2.3 Imp. qts)**

(d) Reinstall the filler plug securely.

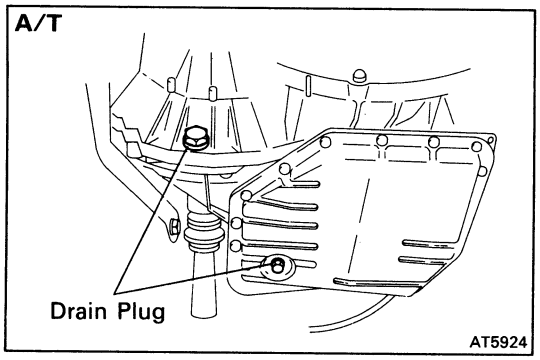

B. **(A/T)**
Replace transaxle fluid

(a) Remove the drain plugs, and drain the fluid.

(b) Reinstall the drain plugs securely.

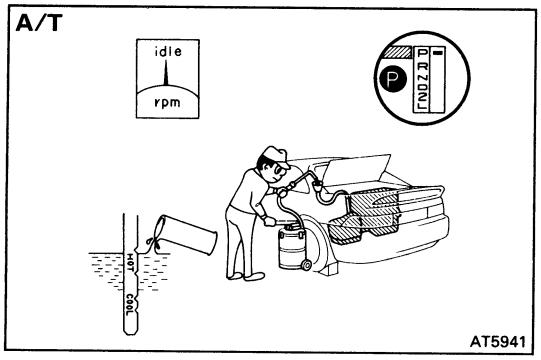

(c) With the engine OFF, add new fluid through the dipstick tube.

Transaxle fluid: ATF DEXRON II

Drain and refill capacity:
3.3 liters (3.6 US qts, 2.9 Imp. qts)

(d) Start the engine and shift the selector into all positions from "P" through "L", and then shift into "P".

(e) With the engine idling, check the fluid level. Add fluid up to the "COOL" level on the dipstick.

NOTICE: Do not overfill. The transmission and differential are separate units.

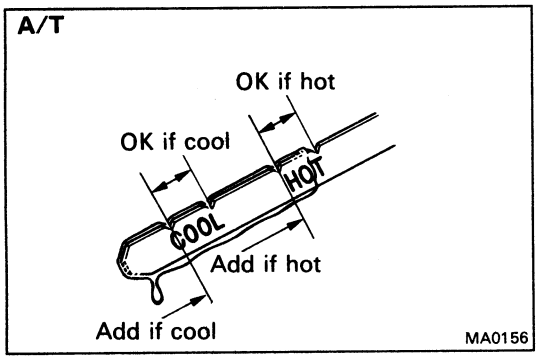

(f) Recheck the fluid level with the normal temperature (70 – 80°C (158 – 176°F)) and add as necessary.

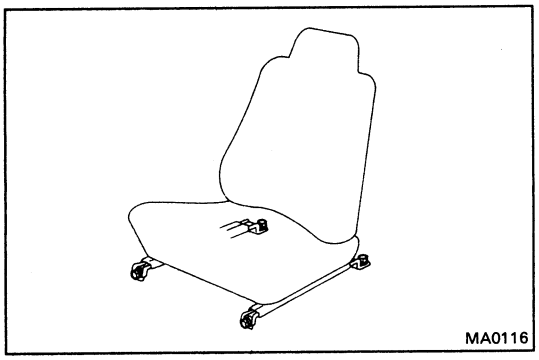

22. TIGHTEN BOLTS AND NUTS ON CHASSIS AND BODY

Tighten the following parts:

- Front seats mount bolts

Torque: 375 kg-cm (27 ft-lb, 37 N·m)

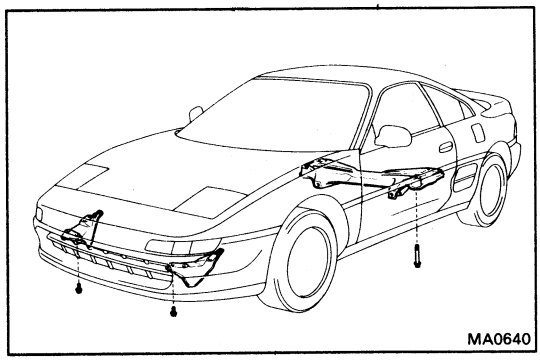

- Strut bar bracket-to-body mount bolts

Torque: 740 kg-cm (54 ft-lb, 73 N·m)

- Rear suspension lower crossmember-to-body mount bolts

Torque: 1,150 kg-cm (83 ft-lb, 113 N·m)

23. BODY INSPECTION

(a) Check the body exterior for dents, scratches and rust.

(b) Check the underbody for rust and damage.

24. ROAD TEST

(a) Check the engine and chassis for abnormal noises.

(b) Check that the vehicle does not wander or pull to one side.

(c) Check that the brakes work properly and do not drag.

25. FINAL INSPECTION

(a) Check the operation of the body parts:

- Hood
  Auxiliary catch operates properly
  Hood locks securely when closed
- Front and rear doors
  Door locks operate properly
  Doors close properly
- Luggage compartment door and back door
  Door lock operates properly
- Seats
  Seat adjusts easily and locks securely in any position
  Front seat back locks securely in any position
  Fold-down rear seat backs lock securely

(b) Be sure to deliver a clean car. Especially check:

- Steering wheel
- Shift lever knob
- All switch knobs
- Door handles
- Seats

GENERAL MAINTENANCE

These are the maintenance and inspection items which are considered to be the owner's responsibility. They can be performed by the owner or he can have them done at a service shop. These items include those which should checked on a daily basis, and in most cases, do not require (Special) tools and are considered to be reasonable for the owner to perform.Procedures for general maintenance are as follows.

OUTSIDE VEHICLE

1. **TIRES**
   (a) Check the pressure with a gauge. Adjust if necessary.
   (b) Check for cuts, damage or excessive wear.

2. **WHEEL NUTS**
   When checking the tires, check the nuts for looseness or for missing nuts. If necessary, tighten them.

3. **WINDSHIELD WIPER BLADES**
   Check for wear or cracks whenever they do not wipe clean. Replace if necessary.

4. **FLUID LEAKS**
   (a) Check underneath for leaking fuel, oil, water or other fluid.
   (b) If you smell gasoline fumes or notice any leak, have the cause found and corrected.

5. **DOORS AND ENGINE HOOD**
   (a) Check that all doors including the trunk lid and back door operate smoothly, and that all latches lock securely.
   (b) Check that the engine hood secondary latch secures the hood from opening when the primary latch is released.

INSIDE VEHICLE

6. **LIGHTS**
   (a) Check that the headlights, stop lights, taillights, turn signal lights, and other lights are all working.
   (b) Check the headlight aim.

7. **WARNING LIGHTS AND BUZZERS**
   Check that all warning lights and buzzers function properly.

8. **HORN**
   Check that it is working.

9. **WINDSHIELD GLASS**
   Check for scratches, pits or abrasions.

10. **WINDSHIELD WIPER AND WASHER**
    (a) Check operation of the wipers and washer.
    (b) Check that the wipers do not streak.

11. **WINDSHIELD DEFROSTER**
    Check that air comes out from the defroster outlet when operating the heater or air conditioner at defroster mode.

12. **REAR VIEW MIRROR**
    Check that it is mounted securely.

13. **SUN VISORS**
    Check that they move freely and are mounted securely.

14. **STEERING WHEEL**
    Check that it has specified freeplay. Be alert for changes in steering condition, such as hard steering, excessive freeplay or strange noise.

15. **SEATS**
    (a) Check that all front seat controls such as seat adjuster, seatback recliner, etc. operate smoothly.
    (b) Check that all latches lock securely in any position.
    (c) Check that the locks hold securely in any latched position.
    (d) Check that the head restraints move up and down smoothly and that the locks hold securely in any latched position.
    (e) For fold-down rear backs, check that the latches lock securely.

16. **SEAT BELTS**
    (a) Check that the seat belt system such as buckles, retractors and anchors operate properly and smoothly,.
    (b) Check that the belt webbing is not cut, frayed, worn or damaged.

17. ACCELERATOR PEDAL

Check the pedal for smooth operation and uneven pedal effort or catching.

18. CLUTCH PEDAL (See page CL-3)

Check the pedal for smooth operation.
Check that the pedal has the proper freeplay.

19. BRAKE PEDAL (See page BR-6)

(a) Check the pedal for smooth operation.

(b) Check that the pedal has the proper reserve distance and freeplay.

(c) Check the brake booster function.

20. BRAKES

At a safe place, check that the brakes do not pull to one side when applied.

21. PARKING BRAKE (See page BR-8)

(a) Check that the lever has the proper travel.

(b) On a safe incline, check that vehicle is held securely with only the parking brake applied.

22. AUTOMATIC TRANSMISSION "PARK" MECHANISM

(a) Check the lock release button of the selector lever proper and smooth operation.

(b) On a safe incline, check that vehicle is held securely with the selector lever in the "P" position and all brakes released.

UNDER HOOD

23. WINDSHIELD WASHER FLUID

Check that there is sufficient fluid in the tank.

24. ENGINE COOLANT LEVEL

Check that coolant level is between the "FULL" and "LOW" lines on the see-through reservoir.

25. RADIATOR AND HOSES

(a) Check that the front of the radiator is clean and not blocked with leaves, dirt or insects.

(b) Check the hoses for cracks, links, rot or loose connections.

26. BATTERY ELECTROLYTE LEVEL

Check that the electrolyte level of all battery cells is between the upper and lower level lines on the case. If level is low, add distilled.

27. BRAKE AND CLUTCH FLUID LEVELS

(a) Check that the brake fluid level is near the upper level line on the see-through reservoir.

(b) Check that the clutch fluid level is within ± 5 mm (0.20 in.) of the reservoir hem.

28. ENGINE DRIVE BELTS

Check all drive belts for fraying, cracks, wear or oiliness.

29. ENGINE OIL LEVEL

Check the level on the dipstick with the engine turned off.

30. POWER STEERING FLUID LEVEL

Check the level on the dipstick

The level should be in the "HOT" or "COLD" range depending on the fluid temperature.

31. AUTOMATIC TRANSMISSION FLUID LEVEL

(a) Park the vehicle on a level surface.

(b) With the engine idling and the parking brake applied, shift the selector into all positions from "P" to "L", and then shift into "P".

(c) Pull out the dipstick and wipe off the fluid with a clean rag. Reinsert the dipstick and check that the fluid level is in the HOT range.

(d) Perform this check with the fluid at normal driving temperature (70 – 80 °C or 158 – 176 °F).

HINT: Wait about 30 minutes before checking the fluid level after extended driving at high speeds in hot weather, driving in heavy traffic or with a trailer.

32. EXHAUST SYSTEM

Visually inspect for cracks, holes or loose supports.

If any change in the sound of the exhaust or smell of the exhaust fumes in noticed, have the cause located and corrected.

ENGINE MECHANICAL

	Page
DESCRIPTION (3S-GTE)	EM-2
DESCRIPTION (5S-FE)	EM-4
TROUBLESHOOTING	EM-6
ENGINE TUNE-UP	EM-10
TOYOTA-VARIABLE INDUCTION SYSTEM (T-VIS)	EM-22
IDLE AND/OR 2,500 RPM HC/CO CONCENTRATION CHECK METHOD	EM-23
COMPRESSION CHECK	EM-25
TIMING BELT (3S-GTE)	EM-26
TIMING BELT (5S-FE)	EM-47
CYLINDER HEAD (3S-GTE)	EM-61
CYLINDER HEAD (5S-FE)	EM-97
CYLINDER BLOCK (3S-GTE)	EM-133
CYLINDER BLOCK (5S-FE)	EM-181

DESCRIPTION (3S-GTE)

The 3S-GTE engine is an in-line, 4-cylinder, 2.0 liter DOHC 16-valve engine.

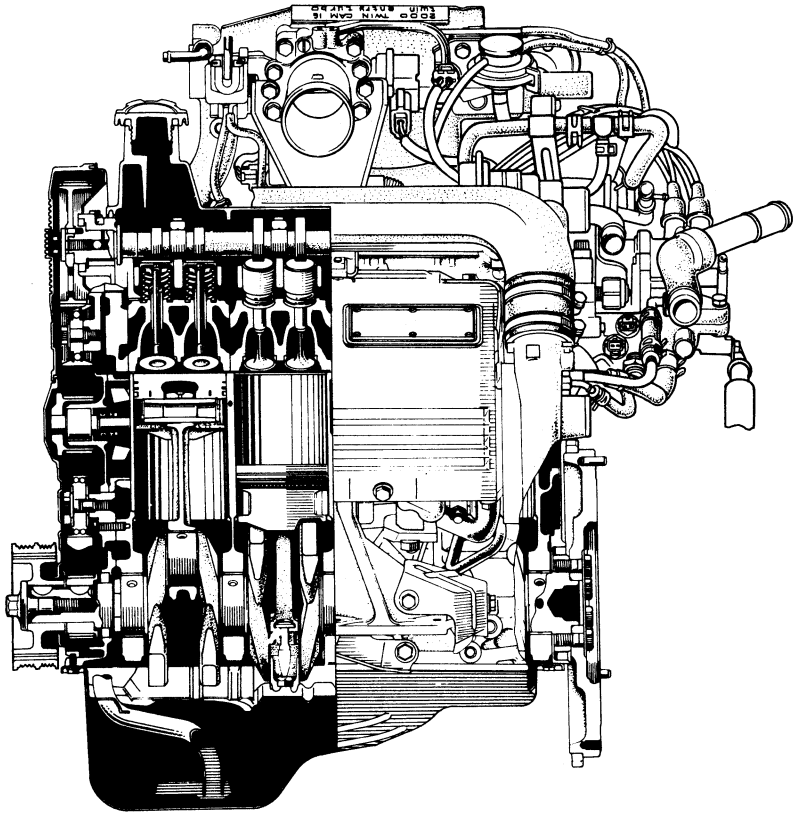

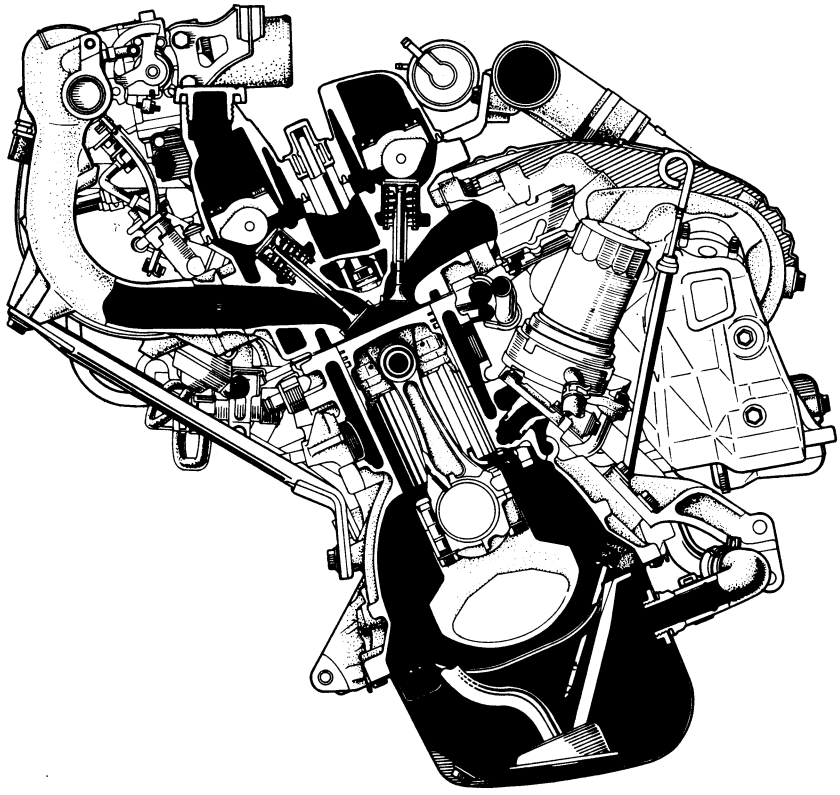

EM9134
EM9135

The 3S-GTE engines are an in-line, 4 cylinder engine with the cylinders numbered 1 – 2 – 3 – 4 from the front. The crankshaft is supported by 5 bearings inside the crankcase. These bearings are made of aluminum alloy.

The crankshaft is integrated with 8 weights for balance. Oil holes are placed in the center of the crankshaft to supply oil to the connecting rods, bearing, pistons and other components.

The firing order is 1 – 3 – 4 – 2. The cylinder head is made of aluminum alloy, with a cross flow type intake and exhaust layout and with pent-roof type combustion chambers. The spark plugs are located in the center of the combustion chambers.

The intake manifold has 8 independent long ports and utilizes the inertial super-charging effect to improve engine torque at low and medium speeds.

Both the intake camshaft and the exhaust camshaft are driven by a single timing belt. The cam journal is supported at 5 places between the valve lifters of each cylinder and on the front end of the cylinder head. Lubrication of the cam journals and cams are accomplis hed by oil supplied through the oiler port in the center of the camshaft.

Adjustment of the valve clearance is done by means of an outer shim type system, in which valve adjusting shims are located above the valve lifters. This permits replacement of the shims without removal of the camshafts.

Pistons are made of high temperature-resistant aluminum alloy, and a depression is built into the piston head to prevent interference with the valves.

Piston pins are the full-floating type, with the pins fastened to the neither piston boss nor connecting rods. Instead, snap rings are fitted on both ends of the pins, preventing the pins from falling out.

The No.1 compression ring is made of steel and the No.2 compression ring is made of cast iron. The oil ring is made of a combination of steel and stainless steel. The outer diameter of each piston ring is slightly larger than the diameter of the piston and the flexibility of the rings allows them to hug the cylinder walls when they are mounted on the piston. Compression rings No.1 and No.2 work to prevent gas leakage from the cylinder and an oil ring works to clear oil off the cylinder walls to prevent it from entering the combustion chambers.

The cylinder block is made of cast iron. It has 4 cylinders which are approximately twice the length of the piston stroke. The top of the cylinders are closed off by the cylinder head and the lower end of the cylinders becomes the crankcase, in which the crankshaft is installed. In addition, the cylinder block contains a water jacket, through which coolant is pumped to cool the cylinders.

The oil pan is bolted onto the bottom of the cylinder block. The oil pan is an oil reservoir made of pressed steel sheet. A dividing plate is included inside the oil pan to keep sufficient oil in the bottom of the pan even when the vehicle is tilted. This dividing plate also prevents the oil from making waves when the vehicle is stopped suddenly and thus shifting the oil away from the oil pump suction pipe.

DESCRIPTION (5S-FE)

The 5S-FE engine is an in-line, 4-cylinder, 2.2 liter DOHC 16-valve engine.

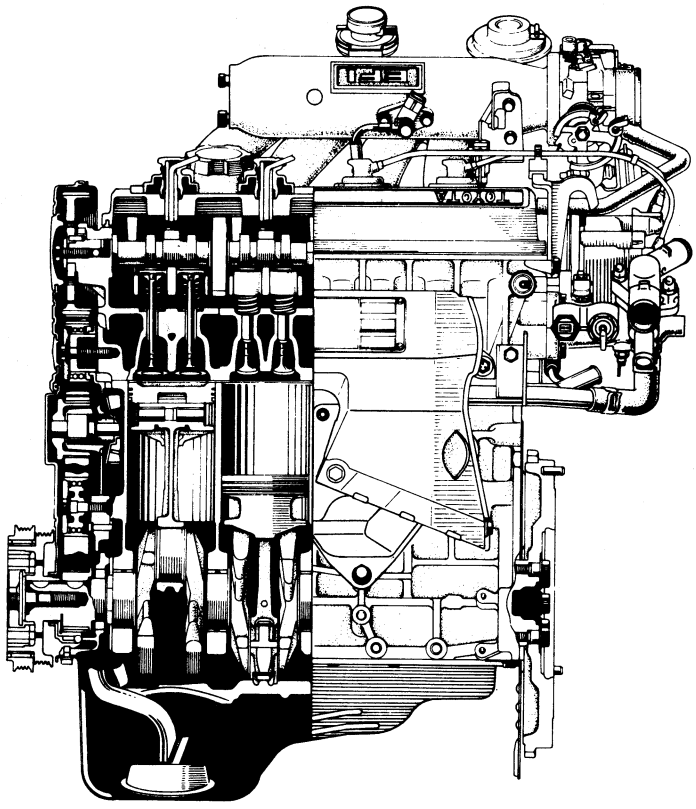

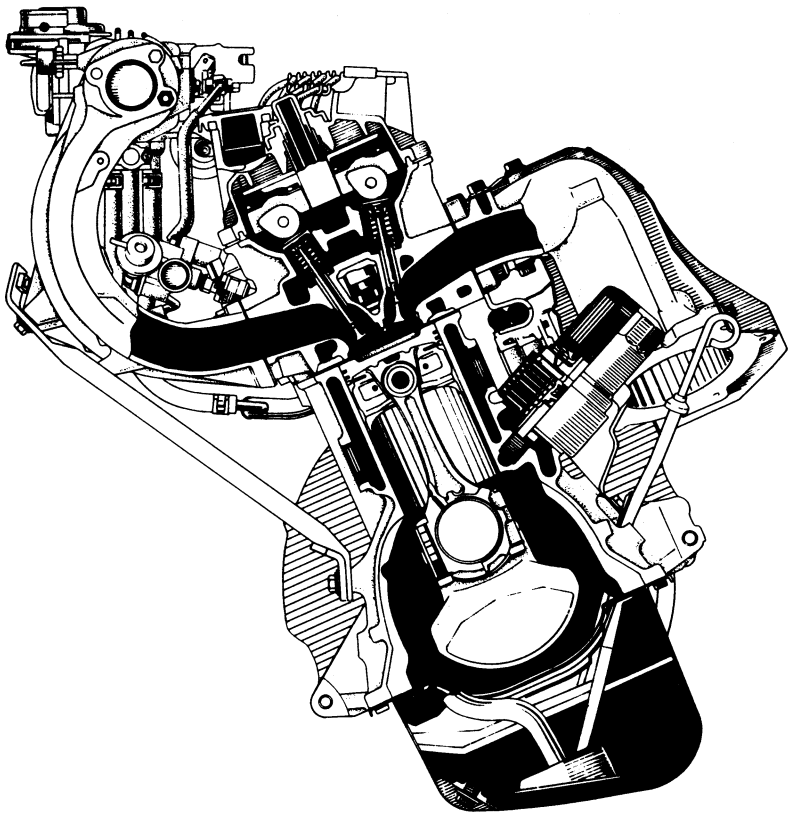

EM9092
EM9093

The 5S-FE engine is an in-line, 4 cylinder engine with the cylinders numbered 1 – 2 – 3 – 4 from the front. The crankshaft is supported by 5 bearings inside the crankcase. These bearings are made of aluminum alloy.

The crankshaft is integrated with 8 weights for balance. Oil holes are placed in the center of the crankshaft to supply oil to the connecting rods, bearing, pistons and other components.

The firing order is 1 – 3 – 4 – 2. The cylinder head is made of aluminum alloy, with a cross flow type intake and exhaust layout and with pent-roof type combustion chambers. The spark plugs are located in the center of the combustion chambers.

The intake manifold has 4 independent long ports and utilizes the inertial super-charging effect to improve engine torque at low and medium speeds.

Exhaust and intake valves are equipped with irregular pitch springs made of special valve spring carbon steel which are capable of functioning no matter what the engine speed.

The intake camshaft is driven by a timing belt, and a gear on the exhaust camshaft engages with a gear on the exhaust camshaft to drive it. The cam journal is supported at 5 places between the valve lifters of each cylinder and on the front end of the cylinder head. Lubrication of the cam journals and gears are accomplished by oil supplied through the oiler port in the center of the camshaft.

Adjustment of the valve clearance is done by means of an outer shim type system, in which valve adjusting shims are located above the valve lifters. This permits replacement of the shims without removal of the camshafts.

Pistons are made of high temperature-resistant aluminum alloy, and a depression is built into the piston head to prevent interference with the valves.

Piston pins are the full-floating type, with the pins fastened to the neither piston boss nor connecting rods. Instead, snap rings are fitted on both ends of the pins, preventing the pins from falling out.

The No.1 compression ring is made of steel and the No.2 compression ring is made of cast iron. The oil ring is made of a combination of steel and stainless steel. The outer diameter of each piston ring is slightly larger than the diameter of the piston and the flexibility of the rings allows them to hug the cylinder walls when they are mounted on the piston. Compression rings No.1 and No.2 work to prevent gas leakage from the cylinder and an oil ring works to clear oil off the cylinder walls to prevent it from entering the combustion chambers.

The cylinder block is made of cast iron. It has 4 cylinders which are approximately twice the length of the piston stroke. The top of the cylinders are closed off by the cylinder head and the lower end of the cylinders becomes the crankcase, in which the crankshaft is installed. In addition, the cylinder block contains a water jacket, through which coolant is pumped to cool the cylinders.

The oil pan is bolted onto the bottom of the cylinder block. The oil pan is an oil reservoir made of pressed steel sheet. A dividing plate is included inside the oil pan to keep sufficient oil in the bottom of the pan even when the vehicle is tilted. This dividing plate also prevents the oil from making waves when the vehicle is stopped suddenly and thus shifting the oil away from the oil pump suction pipe.

TROUBLESHOOTING

ENGINE OVERHEATING

Problem	Possible cause	Remedy	Page
Engine overheats	Cooling system faulty	Troubleshoot cooling system	CO-4
	Incorrect ignition timing	Reset timing	IG-17, 22

HARD STARTING

Problem	Possible cause	Remedy	Page
Engine will not crank or cranks slowly	Starting system faulty	Troubleshoot starting system	ST-2
Engine will not start/ hard to start (cranks OK)	No fuel supply to injector ● No fuel in tank ● Fuel pump no working ● Fuel filter clogged ● Fuel line clogged or leaking	Troubleshoot EFI system	FI-11
	EFI system problems	Repair as necessary	
	Ignition problems ● Ignition coil ● Igniter ● Distributor	Perform spark test	IG-5, 10
	Spark plug faulty	Inspect plugs	IG-6, 11
	High-tension cords disconnected or broken	Inspect cords	IG-6, 11
	Vacuum leaks ● PCV line ● EGR line ● Intake manifold ● T-VIS valve (3S-GTE) ● Throttle body ● ISC valve ● Brake booster line	Repair as necessary	
	Air suction between air flow meter and throttle body	Repair as necessary	
	Low compression	Check compression	EM-25

ROUGH IDLING

Problem	Possible cause	Remedy	Page
Rough idle, stalls or misses	Spark plug faulty	Inspect plugs	IG-6, 11
	High-tension cord faulty	Inspect cords	IG-6, 11
	Ignition problems		
	● Ignition coil	Inspect coil	IG-8, 12
	● Igniter	Inspect igniter	IG-9, 13
	● Distributor	Inspect distributor	IG-9, 13
	Incorrect ignition timing	Reset timing	IG-17, 22
	Vacuum leaks ● PCV line ● EGR line ● Intake manifold	Repair as necessary	

ROUGH IDLING (Cont'd)

Problem	Possible cause	Remedy	Page
Rough idle, stalls or misses (Cont'd)	• T-VIS valve (3S-GTE) • Throttle body • ISC valve • Brake booster line		
	Air suction between air flow meter and throttle body		
	Incorrect idle speed	Check ISC system	FI-148, 151
	Incorrect valve clearance	Adjust valve clearance	EM-11, 16
	EFI system problems	Repair as necessary	
	Engine overheats	Check cooling system	CO-4
	Low compression	Check compression	EM-25

ENGINE HESITATES/POOR ACCELERATION

Problem	Possible cause	Remedy	Page
Engine hesitates/ poor acceleration	Spark plug faulty	Inspect plug	IG-6, 11
	High-tension cord faulty	Inspect cords	IG-6, 11
	Vacuum leaks • PCV line • EGR line • Intake manifold • T-VIS valve • Throttle body • ISC valve • Brake booster line	Repair as necessary	
	Air suction between air flow meter and throttle body	Repair as necessary	
	Incorrect ignition timing	Reset timing	IG-17, 22
	Incorrect valve clearance	Adjust valve clearance	EM-11, 16
	Fuel system clogged	Check fuel system	
	Air cleaner clogged	Check air cleaner	MA-4
	EFI system probles	Repair as necessary	
	Emission control system problem (cold engine) • EGR system always on	Check EGR system	EC-8, 24
	Engine overheats	Check cooling system	CO-4
	Low compression	Check compression	EM-25

ENGINE DIESELING

Problem	Possible cause	Remedy	Page
Engine diesels (runs after ignition switch is tuned off)	EFI system problems	Repair as necessary	
	Incorrect ignition timing	Reset timing	IG-17, 22
	EGR system faulty	Check EGR system	EC-8, 24

AFTER FIRE, BACKFIRE

Problem	Possible	remedy	Page
Muffler explosion (after fire) on deceleration only	Deceleration fuel cut system always off	Check EFI (fuel cut) system	
Muffler explosion (after fire) all the time	Air cleaner clogged	Check air cleaner	MA-4
	EFI system problem	Repair as necessary	
	Incorrect ignition timing	Reset timing	IG-17, 22
Engine backfires	EFI system problem	Repair as necessary	
	Vacuum leak ● PCV line ● EGR line ● Intake manifold ● T-VIS valve ● Throttle body ● ISC valve ● Brake booster line	Check hoses and repair as necessary	
	Air suction between air flow meter and throttle body	Repair as necessary	
	Insufficient fuel flow	Troubleshoot fuel system	FI-11
	Incorrect ignition timing	Reset timing	IG-17, 22
	Incorrect valve clearance	Adjust valve clearance	EM-11, 16
	Carbon deposits in combustion chambers	Inspect cylinder head	EM-74, 110

EXCESSIVE OIL CONSUMPTION

Problem	Possible cause	Remedy	Page
Excessive oil consumption	Oil leak	Repair as necessary	
	PCV line clogged	Check PCV system	
	Piston ring worn or damaged	Check rings	EM-185, 203
	Valve stem and guide bushing worn	Check valves and guide bushing	EM-75, 111
	Valve stem oil seal worn	Check seals	

EXCESSIVE FUEL CONSUMPTION

Problem	Possible cause	Remedy	Page
Poor gasoline mileage	Fuel leak	Repair as necessary	
	Air cleaner clogged	Check air cleaner	MA-4
	Incorrect ignition timing	Reset timing	IG-17, 22
	EFI system problems ● Injector faulty ● Deceleration fuel cut system faulty	Repair as necessary	
	Idle speed too high	Check ISC system	FI-148, 151
	Spark plug faulty	Inspect plugs	IG-6, 11
	EGR suustem always on	Check EGR system	EC-8, 24
	Low compression	Check compression	EM-25
	Tires improperly inflated	Inflate tire to proper pressure	
	Clutch slips	Troubleshoot clutch	
	Brakes drag	Trubleshoot brakes	

UNPLEASANT ODOR

Problem	Possible cause	Remedy	Page
Unpleasant odor	Incorrect idle speed	Check ISC system	FI-148, 151
	Incorrect ignition timing	Reset timing	IG-17, 22
	Vacuum leaks ● PCV line ● EGR line ● Intake manifold ● T-VIS valve ● Throttle body ● ISC valve ● Brake booster line	Repair as necessary	
	EFI system problems	Repair as necessary	

ENGINE TUNE-UP

INSPECTION OF ENGINE COOLANT

(See steps 1 and 2 on page CO-4)

INSPECTION OF ENGINE OIL

(See steps 1 and 2 on page LU-6)

INSPECTION OF BATTERY

(See steps 1 and 2 on page CH-3)

Standard specific gravity:
1.25 – 1.27 when fully charged at 20°C(68°F)

INSPECTION OF AIR FILTER

(See page MA-4)

INSPECTION OF HIGH-TENSION CORDS

(See page IG-6 or 11)

Maximum resistance: 25 kΩ per cord

INSPECTION OF SPARK PLUGS (5S-FE only)

(See page IG-11)

Correct electrode gap:	1.1 mm (0.043 in.)
Recommended spark plugs:	NDK16R-U11 NGK BKR5EYA11

INSPECTION AND ADJUSTMENT OF ALTERNATOR DRIVE BELT

(See step 3 on page CH-3)

Drive belt tension:	New belt	120 ± 20 lb
	Used belt	104 ± 20 lb

INSPECTION AND ADJUSTMENT OF VALVE CLEARANCE (3S-GTE)

HINT: Inspect and adjust the valve clearance when the engine is cold.

1. **DISCONNECT CABLE FROM NEGATIVE TERMINAL OF BATTERY**

   CAUTION: Work must be started after approx. 20 seconds or longer from the time the ignition switch is turned to the "LOCK" position and the negative (–) terminal cable is disconnected from the battery.

2. **REMOVE NO.1 AIR INTAKE CONNECTOR**
   (See step 4 on page TC-20)

3. **DISCONNECT HIGH-TENSION CORDS FROM SPARK PLUGS (See page IG-6)**

4. **REMOVE EGR VACUUM MODULATOR AND VSV**
   (See step 22 on page EM-66)

5. **REMOVE THROTTLE BODY**
   (See steps 3, 5 to 8, 10 and 11 on pages FI-135 and 136)

6. **REMOVE HOSE CLAMP AND VTV CLAMP OF AIR BY-PASS VALVE**
   (See steps 15 and 16 on page TC-9)

7. **REMOVE CYLINDER HEAD COVER**
   (See step 35 on page EM-70)

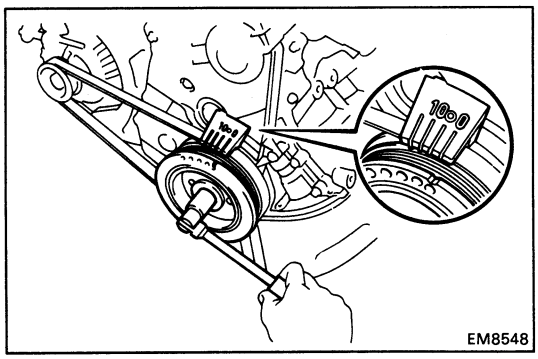

8. **SET NO.1 CYLINDER TO TDC/COMPRESSION**
   (a) Turn the crankshaft pulley and align its groove with timing mark "0" of the No.1 timing belt cover.
   (b) Check that the valve lifters on the No.1 cylinder are loose and valve lifters on No.4 are tight.

   If not, turn the crankshaft one revolution (360°) and align the mark as above.

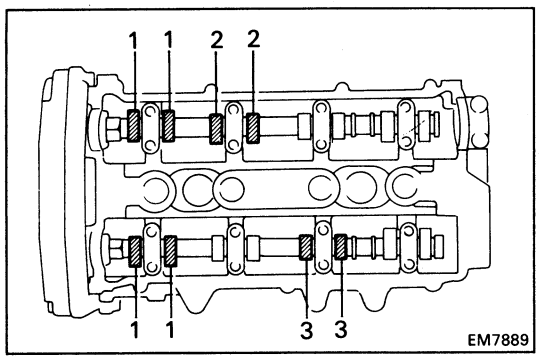

9. **INSPECT VALVE CLEARANCE**
   (a) Check only those valves indicated.
   - Using a feeler gauge, measure the clearance between the valve lifter and camshaft.
   - Record the specicifications of the valve clearance measurements. They will be used later to determine the required replacement adjusting shim.

   Valve clearance (Cold):
   Intake 0.15 – 0.25 mm (0.006 – 0.010 in.)
   Exhaust 0.20 – 0.30 mm (0.008 – 0.012 in.)

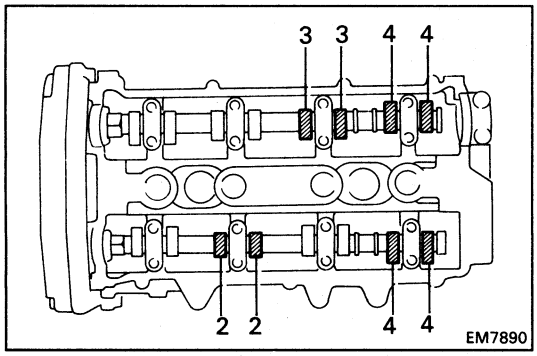

(b) Turn the crankshaft one revolution (360[) and align the mark as above. (See procedure step 8)

(c) Check only the valves indicated as shown. Measure the valve clearance. (See procedure step (a))

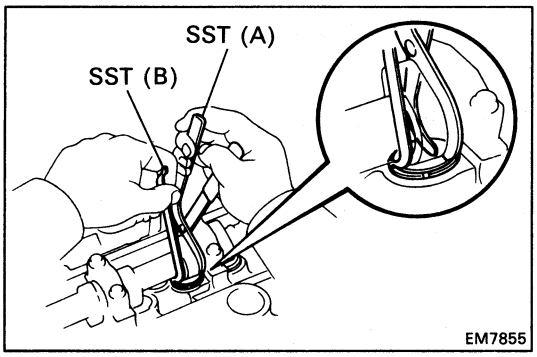

10. ADJUST VALVE CLEARANCE

(a) Remove the adjusting shim.

- Turn the crankshaft to position the cam lobe of the camshaft on the adjusting valve upward.
- Using SST (A), press down the valve lifter and place SST (B) between the camshaft and valve lifter. Remove SST (A).

SST 09248-55010

HINT: Before pressing down the valve lifter, position its notch toward the spark plug side.

- Remove the adjusting shim with small screwdriver and magnetic finger.

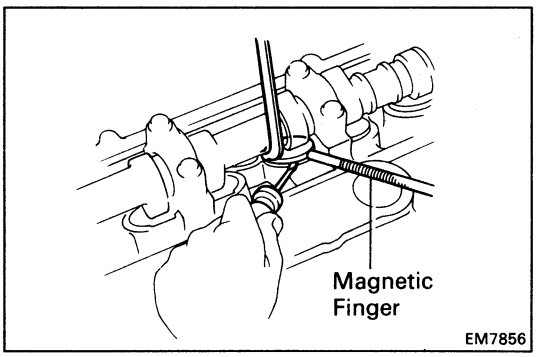

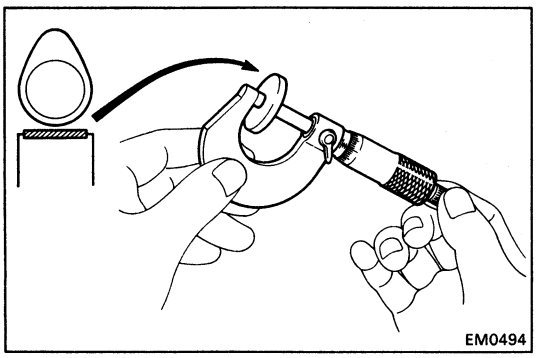

(b) Determine the replacement adjusting shim size by following the Formula or Charts:

- Using a micrometer, measure the thickness of the removal shim.
- Calculate the thickness of a new shim so that the valve clearance comes within the specified value.

T ..... Thickness of used shim
A ..... Measured valve clearance
N ..... Thickness of new shim

Intake N = T + (A – 0.20 mm (0.008 in.))
Exhaust N = T + (A – 0.25 mm (0.010 in.))

- Select a new shim with a thickness as close as possible to the calculated valve.

HINT: Shims are available in twenty-seven sizes of 0.05 mm (0.0020 in.), from 2.00 mm (0.0787 in.) to 3.30 mm (0.1299 in.).

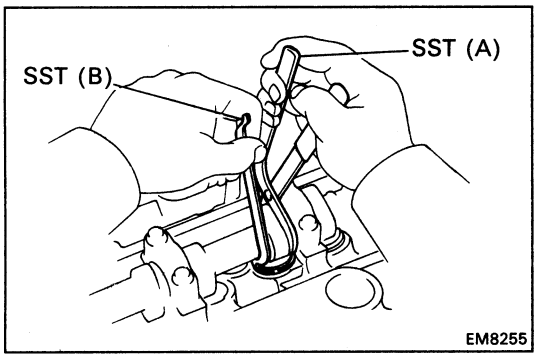

(c) Install a new adjusting shim.
- Place a new adjusting shim on the valve lifter.
- Using SST (A), press down the valve lifter and remove SST (B).

SST 09248-55010

(d) Recheck the valve clearance.

11. REINSTALL CYLINDER HEAD COVER
(See step 7 on page EM-88)

12. INSTALL HOSE CLAMP AND VTV CLAMP OF AIR BY-PASS VALVE
(See steps 13 and 14 on page TC-19)

13. REINSTALL THROTTLE BODY
(See steps 2, 3, 4 to 8 and 10 on pages FI-138 and 139)

14. REINSTALL EGR VACUUM MODULATOR AND VSV
(See step 20 on page EM-92)

15. RECONNECT HIGH-TENSION CORDS FROM SPARK PLUGS

16. REINSTALL NO.1 AIR INTAKE CONNECTOR
(See step 10 on page TC-25)

17. CONNECT CABLE TO NEGATIVE TERMINAL OF BATTERY

Adjusting Shim Selection Using Chart

INTAKE

Measured clearance (mm)	Installed shim thickness (mm)																																																				
	2.000	2.025	2.050	2.075	2.100	2.125	2.150	2.175	2.200	2.225	2.250	2.275	2.300	2.325	2.350	2.375	2.400	2.425	2.450	2.475	2.500	2.525	2.550	2.575	2.600	2.625	2.650	2.675	2.700	2.725	2.750	2.775	2.800	2.825	2.850	2.875	2.900	2.925	2.950	2.975	3.000	3.025	3.050	3.075	3.100	3.125	3.150	3.175	3.200	3.225	3.250	3.275	3.300
0.000 – 0.025							02	02	02	04	04	06	06	08	08	10	10	12	12	14	14	16	16	18	18	20	20	22	22	24	24	26	26	28	28	30	30	32	32	34	34	36	36	38	38	40	40	42	42	44	44	46	46
0.026 – 0.050						02	02	02	04	04	06	06	08	08	10	10	12	12	14	14	16	16	18	18	20	20	22	22	24	24	26	26	28	28	30	30	32	32	34	34	36	36	38	38	40	40	42	42	44	44	46	46	48
0.051 – 0.075					02	02	02	04	04	06	06	08	08	10	10	12	12	14	14	16	16	18	18	20	20	22	22	24	24	26	26	28	28	30	30	32	32	34	34	36	36	38	38	40	40	42	42	44	44	46	46	48	48
0.076 – 0.100				02	02	02	04	04	06	06	08	08	10	10	12	12	14	14	16	16	18	18	20	20	22	22	24	24	26	26	28	28	30	30	32	32	34	34	36	36	38	38	40	40	42	42	44	44	46	46	48	48	50
0.101 – 0.125			02	02	02	04	04	06	06	08	08	10	10	12	12	14	14	16	16	18	18	20	20	22	22	24	24	26	26	28	28	30	30	32	32	34	34	36	36	38	38	40	40	42	42	44	44	46	46	48	48	50	50
0.126 – 0.149		02	02	02	04	04	06	06	08	08	10	10	12	12	14	14	16	16	18	18	20	20	22	22	24	24	26	26	28	28	30	30	32	32	34	34	36	36	38	38	40	40	42	42	44	44	46	46	48	48	50	50	52
0.150 – 0.250																																																					
0.251 – 0.275	04	06	06	08	08	10	10	12	12	14	14	16	16	18	18	20	20	22	22	24	24	26	26	28	28	30	30	32	32	34	34	36	36	38	38	40	40	42	42	44	44	46	46	48	48	50	50	52	52	54	54	54	
0.276 – 0.300	06	06	08	08	10	10	12	12	14	14	16	16	18	18	20	20	22	22	24	24	26	26	28	28	30	30	32	32	34	34	36	36	38	38	40	40	42	42	44	44	46	46	48	48	50	50	52	52	54	54	54		
0.301 – 0.325	06	08	08	10	10	12	12	14	14	16	16	18	18	20	20	22	22	24	24	26	26	28	28	30	30	32	32	34	34	36	36	38	38	40	40	42	42	44	44	46	46	48	48	50	50	52	52	54	54	54			
0.326 – 0.350	08	08	10	10	12	12	14	14	16	16	18	18	20	20	22	22	24	24	26	26	28	28	30	30	32	32	34	34	36	36	38	38	40	40	42	42	44	44	46	46	48	48	50	50	52	52	54	54	54				
0.351 – 0.375	08	10	10	12	12	14	14	16	16	18	18	20	20	22	22	24	24	26	26	28	28	30	30	32	32	34	34	36	36	38	38	40	40	42	42	44	44	46	46	48	48	50	50	52	52	54	54	54					
0.376 – 0.400	10	10	12	12	14	14	16	16	18	18	20	20	22	22	24	24	26	26	28	28	30	30	32	32	34	34	36	36	38	38	40	40	42	42	44	44	46	46	48	48	50	50	52	52	54	54	54						
0.401 – 0.425	10	12	12	14	14	16	16	18	18	20	20	22	22	24	24	26	26	28	28	30	30	32	32	34	34	36	36	38	38	40	40	42	42	44	44	46	46	48	48	50	50	52	52	54	54	54							
0.426 – 0.450	12	12	14	14	16	16	18	18	20	20	22	22	24	24	26	26	28	28	30	30	32	32	34	34	36	36	38	38	40	40	42	42	44	44	46	46	48	48	50	50	52	52	54	54	54								
0.451 – 0.475	12	14	14	16	16	18	18	20	20	22	22	24	24	26	26	28	28	30	30	32	32	34	34	36	36	38	38	40	40	42	42	44	44	46	46	48	48	50	50	52	52	54	54	54									
0.476 – 0.500	14	14	16	16	18	18	20	20	22	22	24	24	26	26	28	28	30	30	32	32	34	34	36	36	38	38	40	40	42	42	44	44	46	46	48	48	50	50	52	52	54	54	54										
0.501 – 0.525	14	16	16	18	18	20	20	22	22	24	24	26	26	28	28	30	30	32	32	34	34	36	36	38	38	40	40	42	42	44	44	46	46	48	48	50	50	52	52	54	54	54											
0.526 – 0.550	16	16	18	18	20	20	22	22	24	24	26	26	28	28	30	30	32	32	34	34	36	36	38	38	40	40	42	42	44	44	46	46	48	48	50	50	52	52	54	54	54												
0.551 – 0.575	16	18	18	20	20	22	22	24	24	26	26	28	28	30	30	32	32	34	34	36	36	38	38	40	40	42	42	44	44	46	46	48	48	50	50	52	52	54	54	54													
0.576 – 0.600	18	18	20	20	22	22	24	24	26	26	28	28	30	30	32	32	34	34	36	36	38	38	40	40	42	42	44	44	46	46	48	48	50	50	52	52	54	54	54														
0.601 – 0.625	18	20	20	22	22	24	24	26	26	28	28	30	30	32	32	34	34	36	36	38	38	40	40	42	42	44	44	46	46	48	48	50	50	52	52	54	54	54															
0.626 – 0.650	20	20	22	22	24	24	26	26	28	28	30	30	32	32	34	34	36	36	38	38	40	40	42	42	44	44	46	46	48	48	50	50	52	52	54	54	54																
0.651 – 0.675	20	22	22	24	24	26	26	28	28	30	30	32	32	34	34	36	36	38	38	40	40	42	42	44	44	46	46	48	48	50	50	52	52	54	54	54																	
0.676 – 0.700	22	22	24	24	26	26	28	28	30	30	32	32	34	34	36	36	38	38	40	40	42	42	44	44	46	46	48	48	50	50	52	52	54	54	54																		
0.701 – 0.725	22	24	24	26	26	28	28	30	30	32	32	34	34	36	36	38	38	40	40	42	42	44	44	46	46	48	48	50	50	52	52	54	54	54																			
0.726 – 0.750	24	24	26	26	28	28	30	30	32	32	34	34	36	36	38	38	40	40	42	42	44	44	46	46	48	48	50	50	52	52	54	54	54																				
0.751 – 0.775	24	26	26	28	28	30	30	32	32	34	34	36	36	38	38	40	40	42	42	44	44	46	46	48	48	50	50	52	52	54	54	54																					
0.776 – 0.800	26	26	28	28	30	30	32	32	34	34	36	36	38	38	40	40	42	42	44	44	46	46	48	48	50	50	52	52	54	54	54																						
0.801 – 0.825	26	28	28	30	30	32	32	34	34	36	36	38	38	40	40	42	42	44	44	46	46	48	48	50	50	52	52	54	54	54																							
0.826 – 0.850	28	28	30	30	32	32	34	34	36	36	38	38	40	40	42	42	44	44	46	46	48	48	50	50	52	52	54	54	54																								
0.851 – 0.875	28	30	30	32	32	34	34	36	36	38	38	40	40	42	42	44	44	46	46	48	48	50	50	52	52	54	54	54																									
0.876 – 0.900	30	30	32	32	34	34	36	36	38	38	40	40	42	42	44	44	46	46	48	48	50	50	52	52	54	54	54																										
0.901 – 0.925	30	32	32	34	34	36	36	38	38	40	40	42	42	44	44	46	46	48	48	50	50	52	52	54	54	54																											
0.926 – 0.950	32	32	34	34	36	36	38	38	40	40	42	42	44	44	46	46	48	48	50	50	52	52	54	54	54																												
0.951 – 0.975	32	34	34	36	36	38	38	40	40	42	42	44	44	46	46	48	48	50	50	52	52	54	54	54																													
0.976 – 1.000	34	34	36	36	38	38	40	40	42	42	44	44	46	46	48	48	50	50	52	52	54	54	54																														
1.001 – 1.025	34	36	36	38	38	40	40	42	42	44	44	46	46	48	48	50	50	52	52	54	54	54																															
1.026 – 1.050	36	36	38	38	40	40	42	42	44	44	46	46	48	48	50	50	52	52	54	54	54																																
1.051 – 1.075	36	38	38	40	40	42	42	44	44	46	46	48	48	50	50	52	52	54	54	54																																	
1.076 – 1.100	38	38	40	40	42	42	44	44	46	46	48	48	50	50	52	52	54	54	54																																		
1.101 – 1.125	38	40	40	42	42	44	44	46	46	48	48	50	50	52	52	54	54	54																																			
1.126 – 1.150	40	40	42	42	44	44	46	46	48	48	50	50	52	52	54	54	54																																				
1.151 – 1.175	40	42	42	44	44	46	46	48	48	50	50	52	52	54	54	54																																					
1.176 – 1.200	42	42	44	44	46	46	48	48	50	50	52	52	54	54	54																																						
1.201 – 1.225	42	44	44	46	46	48	48	50	50	52	52	54	54	54																																							
1.226 – 1.250	44	44	46	46	48	48	50	50	52	52	54	54	54																																								
1.251 – 1.275	44	46	46	48	48	50	50	52	52	54	54	54																																									
1.276 – 1.300	46	46	48	48	50	50	52	52	54	54	54																																										
1.301 – 1.325	46	48	48	50	50	52	52	54	54	54																																											
1.326 – 1.350	48	48	50	50	52	52	54	54	54																																												
1.351 – 1.375	48	50	50	52	52	54	54	54																																													
1.376 – 1.400	50	50	52	52	54	54	54																																														
1.401 – 1.425	50	52	52	54	54	54																																																
1.426 – 1.450	52	52	54	54	54																																																	
1.451 – 1.475	52	54	54	54																																																		
1.476 – 1.500	54	54	54																																																			
1.501 – 1.525	54	54																																																				
1.526 – 1.550	54																																																					

New shim thickness mm (in.)

Shim No.	Thickness	Shim No.	Thickness
02	2.00 (0.0787)	30	2.70 (0.1063)
04	2.05 (0.0807)	32	2.75 (0.1083)
06	2.10 (0.0827)	34	2.80 (0.1102)
08	2.15 (0.0846)	36	2.85 (0.1122)
10	2.20 (0.0866)	38	2.90 (0.1142)
12	2.25 (0.0886)	40	2.95 (0.1161)
14	2.30 (0.0906)	42	3.00 (0.1181)
16	2.35 (0.0925)	44	3.05 (0.1201)
18	2.40 (0.0945)	46	3.10 (0.1220)
20	2.45 (0.0965)	48	3.15 (0.1240)
22	2.50 (0.0984)	50	3.20 (0.1260)
24	2.55 (0.1004)	52	3.25 (0.1280)
26	2.60 (0.1024)	54	3.30 (0.1299)
28	2.65 (0.1043)		

Intake valve clearance (Cold):
0.15 – 0.25 mm (0.006 – 0.010 in.)

EXAMPLE: The 2.800 mm (0.1102 in.) shim is installed, and the measured clearance is 0.450 mm (0.0177 in.). Replace the 2.800 mm (0.1102 in.) shim with a No.44 shim.

Adjusting Shim Selection Using Chart

EXHAUST

Measured clearance (mm)	Installed shim thickness (mm)																																																				
	2.000	2.025	2.050	2.075	2.100	2.125	2.150	2.175	2.200	2.225	2.250	2.275	2.300	2.325	2.350	2.375	2.400	2.425	2.450	2.475	2.500	2.525	2.550	2.575	2.600	2.625	2.650	2.675	2.700	2.725	2.750	2.775	2.800	2.825	2.850	2.875	2.900	2.925	2.950	2.975	3.000	3.025	3.050	3.075	3.100	3.125	3.150	3.175	3.200	3.225	3.250	3.275	3.300
0.000 – 0.025									02	02	02	04	04	06	06	08	08	10	10	12	12	14	14	16	16	18	18	20	20	22	22	24	24	26	26	28	28	30	30	32	32	34	34	36	36	38	38	40	40	42	42	44	44
0.026 – 0.050								02	02	02	04	04	06	06	08	08	10	10	12	12	14	14	16	16	18	18	20	20	22	22	24	24	26	26	28	28	30	30	32	32	34	34	36	36	38	38	40	40	42	42	44	44	46
0.051 – 0.075							02	02	02	04	04	06	06	08	08	10	10	12	12	14	14	16	16	18	18	20	20	22	22	24	24	26	26	28	28	30	30	32	32	34	34	36	36	38	38	40	40	42	42	44	44	46	46
0.076 – 0.100						02	02	02	04	04	06	06	08	08	10	10	12	12	14	14	16	16	18	18	20	20	22	22	24	24	26	26	28	28	30	30	32	32	34	34	36	36	38	38	40	40	42	42	44	44	46	46	48
0.101 – 0.125					02	02	02	04	04	06	06	08	08	10	10	12	12	14	14	16	16	18	18	20	20	22	22	24	24	26	26	28	28	30	30	32	32	34	34	36	36	38	38	40	40	42	42	44	44	46	46	48	48
0.126 – 0.150				02	02	02	04	04	06	06	08	08	10	10	12	12	14	14	16	16	18	18	20	20	22	22	24	24	26	26	28	28	30	30	32	32	34	34	36	36	38	38	40	40	42	42	44	44	46	46	48	48	50
0.151 – 0.175			02	02	02	04	04	06	06	08	08	10	10	12	12	14	14	16	16	18	18	20	20	22	22	24	24	26	26	28	28	30	30	32	32	34	34	36	36	38	38	40	40	42	42	44	44	46	46	48	48	50	50
0.176 – 0.199		02	02	02	04	04	06	06	08	08	10	10	12	12	14	14	16	16	18	18	20	20	22	22	24	24	26	26	28	28	30	30	32	32	34	34	36	36	38	38	40	40	42	42	44	44	46	46	48	48	50	50	52
0.200 – 0.300																																																					
0.301 – 0.325	04	06	06	08	08	10	10	12	12	14	14	16	16	18	18	20	20	22	22	24	24	26	26	28	28	30	30	32	32	34	34	36	36	38	38	40	40	42	42	44	44	46	46	48	48	50	50	52	52	54	54	54	
0.326 – 0.350	06	06	08	08	10	10	12	12	14	14	16	16	18	18	20	20	22	22	24	24	26	26	28	28	30	30	32	32	34	34	36	36	38	38	40	40	42	42	44	44	46	46	48	48	50	50	52	52	54	54	54		
0.351 – 0.375	06	08	08	10	10	12	12	14	14	16	16	18	18	20	20	22	22	24	24	26	26	28	28	30	30	32	32	34	34	36	36	38	38	40	40	42	42	44	44	46	46	48	48	50	50	52	52	54	54	54			
0.376 – 0.400	08	08	10	10	12	12	14	14	16	16	18	18	20	20	22	22	24	24	26	26	28	28	30	30	32	32	34	34	36	36	38	38	40	40	42	42	44	44	46	46	48	48	50	50	52	52	54	54	54				
0.401 – 0.425	08	10	10	12	12	14	14	16	16	18	18	20	20	22	22	24	24	26	26	28	28	30	30	32	32	34	34	36	36	38	38	40	40	42	42	44	44	46	46	48	48	50	50	52	52	54	54	54					
0.426 – 0.450	10	10	12	12	14	14	16	16	18	18	20	20	22	22	24	24	26	26	28	28	30	30	32	32	34	34	36	36	38	38	40	40	42	42	44	44	46	46	48	48	50	50	52	52	54	54	54						
0.451 – 0.475	10	12	12	14	14	16	16	18	18	20	20	22	22	24	24	26	26	28	28	30	30	32	32	34	34	36	36	38	38	40	40	42	42	44	44	46	46	48	48	50	50	52	52	54	54	54							
0.476 – 0.500	12	12	14	14	16	16	18	18	20	20	22	22	24	24	26	26	28	28	30	30	32	32	34	34	36	36	38	38	40	40	42	42	44	44	46	46	48	48	50	50	52	52	54	54	54								
0.501 – 0.525	12	14	14	16	16	18	18	20	20	22	22	24	24	26	26	28	28	30	30	32	32	34	34	36	36	38	38	40	40	42	42	44	44	46	46	48	48	50	50	52	52	54	54	54									
0.526 – 0.550	14	14	16	16	18	18	20	20	22	22	24	24	26	26	28	28	30	30	32	32	34	34	36	36	38	38	40	40	42	42	44	44	46	46	48	48	50	50	52	52	54	54	54										
0.551 – 0.575	14	16	16	18	18	20	20	22	22	24	24	26	26	28	28	30	30	32	32	34	34	36	36	38	38	40	40	42	42	44	44	46	46	48	48	50	50	52	52	54	54	54											
0.576 – 0.600	16	16	18	18	20	20	22	22	24	24	26	26	28	28	30	30	32	32	34	34	36	36	38	38	40	40	42	42	44	44	46	46	48	48	50	50	52	52	54	54	54												
0.601 – 0.625	16	18	18	20	20	22	22	24	24	26	26	28	28	30	30	32	32	34	34	36	36	38	38	40	40	42	42	44	44	46	46	48	48	50	50	52	54	54	54	54													
0.626 – 0.650	18	18	20	20	22	22	24	24	26	26	28	28	30	30	32	32	34	34	36	36	38	38	40	40	42	42	44	44	46	46	48	48	50	50	52	52	54	54	54														
0.651 – 0.675	18	20	20	22	22	24	24	26	26	28	28	30	30	32	32	34	34	36	36	38	38	40	40	42	42	44	44	46	46	48	48	50	50	52	52	54	54	54															
0.676 – 0.700	20	20	22	22	24	24	26	26	28	28	30	30	32	32	34	34	36	36	38	38	40	40	42	42	44	44	46	46	48	48	50	50	52	52	54	54	54																
0.701 – 0.725	20	22	22	24	24	26	26	28	28	30	30	32	32	34	34	36	36	38	38	40	40	42	42	44	44	46	46	48	48	50	50	52	52	54	54	54																	
0.726 – 0.750	22	22	24	24	26	26	28	28	30	30	32	32	34	34	36	36	38	38	40	40	42	42	44	44	46	46	48	48	50	50	52	52	54	54	54																		
0.751 – 0.775	22	24	24	26	26	28	28	30	30	32	32	34	34	36	36	38	38	40	40	42	42	44	44	46	46	48	48	50	50	52	52	54	54	54																			
0.776 – 0.800	24	24	26	26	28	28	30	30	32	32	34	34	36	36	38	38	40	40	42	42	44	44	46	46	48	48	50	50	52	52	54	54	54																				
0.801 – 0.825	24	26	26	28	28	30	30	32	32	34	34	36	36	38	38	40	40	42	42	44	44	46	46	48	48	50	50	52	52	54	54	54																					
0.826 – 0.850	26	26	28	28	30	30	32	32	34	34	36	36	38	38	40	40	42	42	44	44	46	46	48	48	50	50	52	52	54	54	54																						
0.851 – 0.875	26	28	28	30	30	32	32	34	34	36	36	38	38	40	40	42	42	44	44	46	46	48	48	50	50	52	52	54	54	54																							
0.876 – 0.900	28	28	30	30	32	32	34	34	36	36	38	38	40	40	42	42	44	44	46	46	48	48	50	50	52	52	54	54	54																								
0.901 – 0.925	28	30	30	32	32	34	34	36	36	38	38	40	40	42	42	44	44	46	46	48	48	50	50	52	52	54	54	54																									
0.926 – 0.950	30	30	32	32	34	34	36	36	38	38	40	40	42	42	44	44	46	46	48	48	50	50	52	52	54	54	54																										
0.951 – 0.975	30	32	32	34	34	36	36	38	38	40	40	42	42	44	44	46	46	48	48	50	50	52	52	54	54	54																											
0.976 – 1.000	32	32	34	34	36	36	38	38	40	40	42	42	44	44	46	46	48	48	50	50	52	52	54	54	54																												
1.001 – 1.025	32	34	34	36	36	38	38	40	40	42	42	44	44	46	46	48	48	50	50	52	52	54	54	54																													
1.026 – 1.050	34	34	36	36	38	38	40	40	42	42	44	44	46	46	48	48	50	50	52	52	54	54	54																														
1.051 – 1.075	34	36	36	38	38	40	40	42	42	44	44	46	46	48	48	50	50	52	52	54	54	54																															
1.076 – 1.100	36	36	38	38	40	40	42	42	44	44	46	46	48	48	50	50	52	52	54	54	54																																
1.101 – 1.125	36	38	38	40	40	42	42	44	44	46	46	48	48	50	50	52	52	54	54	54																																	
1.126 – 1.150	38	38	40	40	42	42	44	44	46	46	48	48	50	50	52	52	54	54	54																																		
1.151 – 1.175	38	40	40	42	42	44	44	46	46	48	48	50	50	52	52	54	54	54																																			
1.176 – 1.200	40	40	42	42	44	44	46	46	48	48	50	50	52	52	54	54	54																																				
1.201 – 1.225	40	42	42	44	44	46	46	48	48	50	50	52	52	54	54	54																																					
1.226 – 1.250	42	42	44	44	46	46	48	48	50	50	52	52	54	54	54																																						
1.251 – 1.275	42	44	44	46	46	48	48	50	50	52	52	54	54	54																																							
1.276 – 1.300	44	44	46	46	48	48	50	50	52	52	54	54	54																																								
1.301 – 1.325	44	46	46	48	48	50	50	52	52	54	54	54																																									
1.326 – 1.350	46	46	48	48	50	50	52	52	54	54	54																																										
1.351 – 1.375	46	48	48	50	50	52	52	54	54	54																																											
1.376 – 1.400	48	48	50	50	52	52	54	54	54																																												
1.401 – 1.425	48	50	50	52	52	54	54	54																																													
1.426 – 1.450	50	50	52	52	54	54	54																																														
1.451 – 1.475	50	52	52	54	54	54																																															
1.476 – 1.500	52	52	54	54	54																																																
1.501 – 1.525	52	54	54	54																																																	
1.526 – 1.550	54	54	54																																																		
1.551 – 1.575	54	54																																																			
1.576 – 1.600	54																																																				

New shim thickness mm (in.)

Shim No.	Thickness	Shim No.	Thickness
02	2.00 (0.0787)	30	2.70 (0.1063)
04	2.05 (0.0807)	32	2.75 (0.1083)
06	2.10 (0.0827)	34	2.80 (0.1102)
08	2.15 (0.0846)	36	2.85 (0.1122)
10	2.20 (0.0866)	38	2.90 (0.1142)
12	2.25 (0.0886)	40	2.95 (0.1161)
14	2.30 (0.0906)	42	3.00 (0.1181)
16	2.35 (0.0925)	44	3.05 (0.1201)
18	2.40 (0.0945)	46	3.10 (0.1220)
20	2.45 (0.0965)	48	3.15 (0.1240)
22	2.50 (0.0984)	50	3.20 (0.1260)
24	2.55 (0.1004)	52	3.25 (0.1280)
26	2.60 (0.1024)	54	3.30 (0.1299)
28	2.65 (0.1043)		

Exhaust valve clearance (Cold):
0.20 – 0.30 mm (0.008 – 0.012 in.)

EXAMPLE: The 2.800 mm (0.1102 in.) shim is installed, and the measured clearance is 0.450 mm (0.0177 in.). Replace the 2.800 mm (0.1102 in.) shim with a No.42 shim.

INSPECTION AND ADJUSTMENT OF VALVE CLEARANCE (5S-FE)

HINT: Inspect and adjust the valve clearance when the engine is cold.

1. **DISCONNECT HIGH-TENSION CORDS FROM SPARK PLUGS (See page IG-11)**

2. **REMOVE CYLINDER HEAD COVER (See step 32 on page EM-104)**

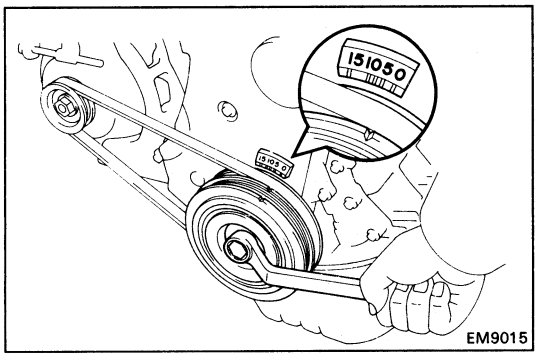

3. **SET NO.1 CYLINDER TO TDC/COMPRESSION**

(a) Turn the crankshaft pulley and align its groove with timing mark "0" of the No.1 timing belt cover.

(b) Check that the valve lifters on the No.1 cylinder are loose and valve lifters on the No.4 are tight.

If not, turn the crankshaft one revolution (360°) and align the mark as above.

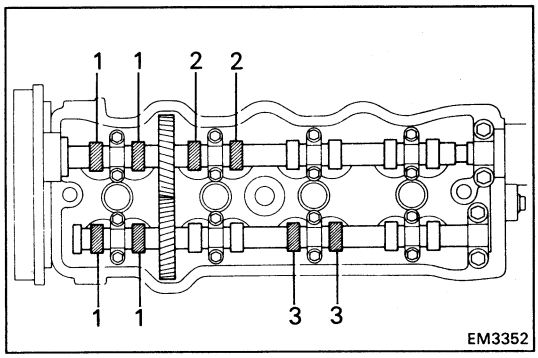

4. **INSPECT VALVE CLEARANCE**

(a) Check only those valves indicated.

- Using a feeler gauge, measure the clearance between the valve lifter and camshaft.
- Record out of the specicification valve clearance measurements. They will be used later to determine the required replacement adjusting shim.

Valve clearance (Cold):

Intake	**0.19 – 0.29 mm (0.007 – 0.011 in.)**
Exhaust	**0.28 – 0.38 mm (0.011 – 0.015 in.)**

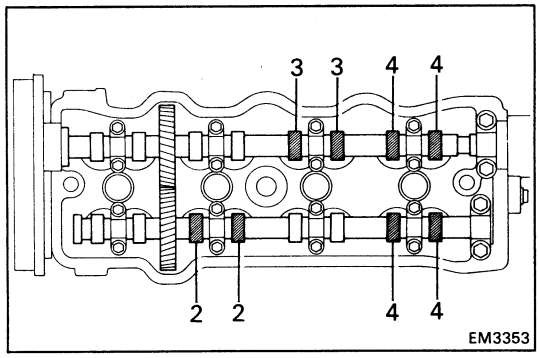

(b) Turn the crankshaft one revolution (360°) and align the mark as above. (See procedure step 3)

(c) Check only the valves indicated as shown. Measure the valve clearance. (See procedure step (a))

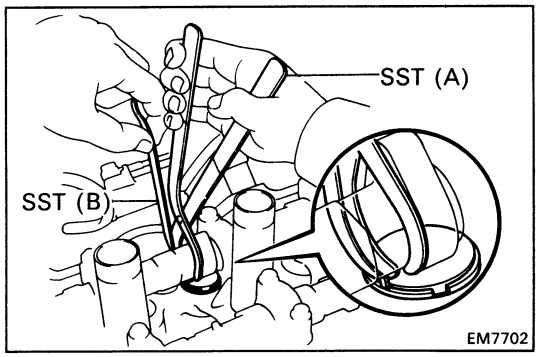

5. **ADJUST VALVE CLEARANCE**

(a) Remove the adjusting shim.

- Turn the crankshaft to position the cam lobe of the camshaft on the adjusting valve upward.
- Using SST (A), press down the valve lifter and place SST (B) between the camshaft and valve lifter. Remove SST (A).

SST 09248-55010

HINT: Before pressing down the valve lifter, position its notch toward the spark plug side.

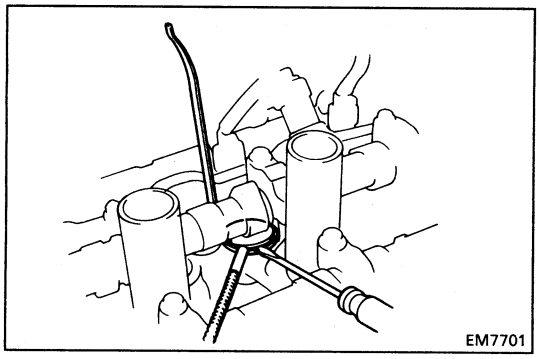

- Remove the adjusting shim with small screwdriver and magnetic finger.

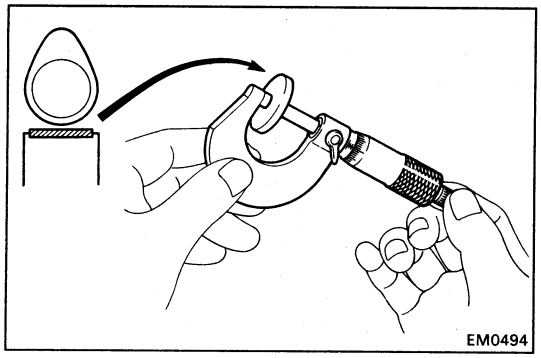

(b) Determine the replacement adjusting shim size by following the Formula or Charts:

- Using a micrometer, measure the thickness of the removal shim.
- Calculate the thickness of a new shim so that the valve clearance comes within specified value.

T ..... Thickness of used shim
A ..... Measured valve clearance
N ..... Thickness of new shim

Intake **N = T + (A – 0.24 mm (0.009 in.))**
Exhaust **N = T + (A – 0.33 mm (0.013 in.))**

- Select a new shim with a thickness as close as possible to the calculated valve.

HINT: Shims are available in seventeen sizes of 0.05 mm (0.0020 in.), from 2.50 mm (0.0984 in.) to 3.30 mm (0.1299 in.).

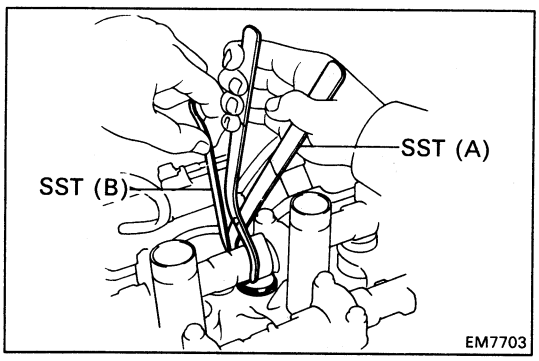

(c) Install a new adjusting shim.

- Place a new adjusting shim on the valve lifter.
- Using SST (A), press down the valve lifter and remove SST (B).

SST 09248-55010

(d) Recheck the valve clearance.

6. **REINSTALL CYLINDER HEAD COVER**
(See step 7 on page EM-126)

7. **RECONNECT HIGH-TENSION CORDS TO SPARK PLUGS**

Adjusting Shim Selection Using Chart

INTAKE

Measured clearance (mm)	Installed shim thickness (mm)																																							
	2.500	2.550	2.600	2.620	2.640	2.650	2.660	2.680	2.700	2.720	2.740	2.750	2.760	2.780	2.800	2.820	2.840	2.850	2.860	2.880	2.900	2.920	2.940	2.950	2.960	2.980	3.000	3.020	3.040	3.050	3.060	3.080	3.100	3.120	3.140	3.150	3.160	3.180	3.200	3.250	3.300
0.000-0.025								02	02	02	02	02	04	04	04	06	06	06	08	08	08	10	10	10	12	12	12	14	14	14	16	16	16	18	18	18	20	20	20	22	24
0.026-0.050					02	02	02	02	02	02	04	04	04	06	06	06	08	08	08	10	10	10	12	12	12	14	14	14	16	16	16	18	18	18	20	20	20	22	22	24	26
0.051-0.075				02	02	02	02	02	02	04	04	04	06	06	06	08	08	08	10	10	10	12	12	12	14	14	14	16	16	16	18	18	18	20	20	20	22	22	22	24	26
0.076-0.100			02	02	02	02	02	04	04	04	06	06	06	08	08	08	10	10	10	12	12	12	14	14	14	16	16	16	18	18	18	20	20	20	22	22	22	24	24	26	28
0.101-0.125			02	02	02	02	04	04	04	06	06	06	08	08	08	10	10	10	12	12	12	14	14	14	16	16	16	18	18	18	20	20	20	22	22	22	24	24	24	26	28
0.126-0.150		02	02	02	04	04	04	06	06	06	08	08	08	10	10	10	12	12	12	14	14	14	16	16	16	18	18	18	20	20	20	22	22	22	24	24	24	26	26	28	30
0.151-0.175		02	02	04	04	04	06	06	06	08	08	08	10	10	10	12	12	12	14	14	14	16	16	16	18	18	18	20	20	20	22	22	22	24	24	24	26	26	26	28	30
0.176-0.189		02	04	04	06	06	06	06	08	08	10	10	10	10	12	12	14	14	14	14	16	16	18	18	18	18	20	20	22	22	22	22	24	24	26	26	26	26	28	30	32
0.190-0.290																																									
0.291-0.300	04	06	08	10	10	10	10	12	12	14	14	14	14	16	16	18	18	18	18	20	20	22	22	22	22	24	24	26	26	26	26	28	28	30	30	30	30	32	32	34	
0.301-0.325	04	06	08	10	10	10	12	12	12	14	14	14	16	16	16	18	18	18	20	20	20	22	22	22	24	24	24	26	26	26	28	28	28	30	30	30	32	32	32	34	
0.326-0.350	06	08	10	10	12	12	12	14	14	14	16	16	16	18	18	18	20	20	20	22	22	22	24	24	24	26	26	26	28	28	28	30	30	30	32	32	32	34	34		
0.351-0.375	06	08	10	12	12	12	14	14	14	16	16	16	18	18	18	20	20	20	22	22	22	24	24	24	26	26	26	28	28	28	30	30	30	32	32	32	34	34	34		
0.376-0.400	08	10	12	12	14	14	14	16	16	16	18	18	18	20	20	20	22	22	22	24	24	24	26	26	26	28	28	28	30	30	30	32	32	32	34	34	34	34			
0.401-0.425	08	10	12	14	14	14	16	16	16	18	18	18	20	20	20	22	22	22	24	24	24	26	26	26	28	28	28	30	30	30	32	32	32	34	34	34	34				
0.426-0.450	10	12	14	14	16	16	16	18	18	18	20	20	20	22	22	22	24	24	24	26	26	26	28	28	28	30	30	30	32	32	32	34	34	34	34						
0.451-0.475	10	12	14	16	16	16	18	18	18	20	20	20	22	22	22	24	24	24	26	26	26	28	28	28	30	30	30	32	32	32	34	34	34								
0.476-0.500	12	14	16	16	18	18	18	20	20	20	22	22	22	24	24	24	26	26	26	28	28	28	30	30	30	32	32	32	34	34	34	34									
0.501-0.525	12	14	16	18	18	18	20	20	20	22	22	22	24	24	24	26	26	26	28	28	28	30	30	30	32	32	32	34	34	34	34										
0.526-0.550	14	16	18	18	20	20	20	22	22	22	24	24	24	26	26	26	28	28	28	30	30	30	32	32	32	34	34	34	34												
0.551-0.575	14	16	18	20	20	20	22	22	22	24	24	24	26	26	26	28	28	28	30	30	30	32	32	32	34	34	34														
0.576-0.600	16	18	20	20	22	22	22	24	24	24	26	26	26	28	28	28	30	30	30	32	32	32	34	34	34	34															
0.601-0.625	16	18	20	22	22	22	24	24	24	26	26	26	28	28	28	30	30	30	32	32	32	34	34	34	34																
0.626-0.650	18	20	22	22	24	24	24	26	26	26	28	28	28	30	30	30	32	32	32	34	34	34	34																		
0.651-0.675	18	20	22	24	24	24	26	26	26	28	28	28	30	30	30	32	32	32	34	34	34																				
0.676-0.700	20	22	24	24	26	26	26	28	28	28	30	30	30	32	32	32	34	34	34	34																					
0.701-0.725	20	22	24	26	26	26	28	28	28	30	30	30	32	32	32	34	34	34	34																						
0.726-0.750	22	24	26	26	28	28	28	30	30	30	32	32	32	34	34	34	34																								
0.751-0.775	22	24	26	28	28	28	30	30	30	32	32	32	34	34	34																										
0.776-0.800	24	26	28	28	30	30	30	32	32	32	34	34	34	34																											
0.801-0.825	24	26	28	30	30	30	32	32	32	34	34	34	34																												
0.826-0.850	26	28	30	30	32	32	32	34	34	34	34																														
0.851-0.875	26	28	30	32	32	32	34	34	34																																
0.876-0.900	28	30	32	32	34	34	34	34																																	
0.901-0.925	28	30	32	34	34	34	34																																		
0.926-0.950	30	32	34	34	34																																				
0.951-0.975	30	32	34																																						
0.976-1.000	32	34																																							
1.001-1.025	34	34																																							
1.026-1.090	34																																								

New shim thickness mm (in.)

Shim No.	Thickness	Shim No.	Thickness
02	2.50 (0.0984)	20	2.95 (0.1161)
04	2.55 (0.1004)	22	3.00 (0.1181)
06	2.60 (0.1024)	24	3.05 (0.1201)
08	2.65 (0.1043)	26	3.10 (0.1220)
10	2.70 (0.1063)	28	3.15 (0.1240)
12	2.75 (0.1083)	30	3.20 (0.1260)
14	2.80 (0.1102)	32	3.25 (0.1280)
16	2.85 (0.1122)	34	3.30 (0.1299)
18	2.90 (0.1142)		

Intake valve clearance (Cold):
0.19 – 0.29 mm (0.007 – 0.011 in.)

EXAMPLE: The 2.800 mm (0.1102 in.) shim is installed, and the measured clearance is 0.450 mm (0.0177 in.). Replace the 2.800 mm (0.1102 in.) shim with a No.22 shim.

Adjusting Shim Selection Using Chart

EXHAUST

Measured clearance (mm)	Installed shim thickness (mm)																																								
	2.500	2.550	2.600	2.620	2.640	2.650	2.660	2.680	2.700	2.720	2.740	2.750	2.760	2.780	2.800	2.820	2.840	2.850	2.860	2.880	2.900	2.920	2.940	2.950	2.960	2.980	3.000	3.020	3.040	3.050	3.060	3.080	3.100	3.120	3.140	3.150	3.160	3.180	3.200	3.250	3.300
0.000-0.025													02	02	02	02	02	04	04	04	06	06	06	08	08	08	10	10	10	12	12	12	14	14	14	16	16	16	18	20	22
0.026-0.050											02	02	02	02	02	04	04	04	04	06	06	08	08	08	08	10	10	12	12	12	12	14	14	16	16	16	16	18	18	20	22
0.051-0.075										02	02	02	02	02	04	04	04	06	06	06	08	08	08	10	10	10	12	12	12	14	14	14	16	16	16	18	18	18	20	22	24
0.076-0.100								02	02	02	02	02	02	04	04	06	06	06	06	08	08	10	10	10	10	12	12	14	14	14	14	16	16	18	18	18	18	20	20	22	24
0.101-0.125							02	02	02	02	02	04	04	04	06	06	06	08	08	08	10	10	10	12	12	12	14	14	14	16	16	16	18	18	18	20	20	20	22	24	26
0.126-0.150					02	02	02	02	02	04	04	04	04	06	06	08	08	08	08	10	10	12	12	12	12	14	14	16	16	16	16	18	18	20	20	20	20	22	22	24	26
0.150-0.175				02	02	02	02	02	04	04	04	06	06	06	08	08	08	10	10	10	12	12	12	14	14	14	16	16	16	18	18	18	20	20	20	22	22	22	24	26	28
0.176-0.200			02	02	02	02	02	04	04	06	06	06	06	08	08	10	10	10	10	12	12	14	14	14	14	16	16	18	18	18	18	20	20	22	22	22	22	24	24	26	28
0.201-0.225			02	02	02	04	04	04	06	06	06	08	08	08	10	10	10	12	12	12	14	14	14	16	16	16	18	18	18	20	20	20	22	22	22	24	24	24	26	28	30
0.226-0.250		02	02	04	04	04	04	06	06	08	08	08	08	10	10	12	12	12	12	14	14	16	16	16	16	18	18	20	20	20	20	22	22	24	24	24	24	26	26	28	30
0.251-0.275		02	04	04	04	06	06	08	08	08	08	10	10	10	12	12	12	14	14	14	16	16	16	18	18	18	20	20	20	22	22	22	24	24	24	26	26	26	28	30	32
0.275-0.279		02	04	04	06	06	06	08	08	08	10	10	10	12	12	12	14	14	14	16	16	16	18	18	18	20	20	20	22	22	22	24	24	24	26	26	26	28	28	30	32
0.280-0.380																																									
0.381-0.400	04	06	08	10	10	10	10	12	12	14	14	14	14	16	16	18	18	18	18	20	20	22	22	22	22	24	24	26	26	26	26	28	28	30	30	30	30	32	32	34	
0.401-0.425	06	08	10	10	10	12	12	12	14	14	14	16	16	16	18	18	18	20	20	20	22	22	22	24	24	24	26	26	26	28	28	28	30	30	30	32	32	32	34	34	
0.426-0.450	06	08	10	12	12	12	12	14	14	16	16	16	16	18	18	20	20	20	20	22	22	24	24	24	24	26	26	28	28	28	28	30	30	32	32	32	32	34	34		
0.451-0.475	08	10	12	12	12	14	14	14	16	16	16	18	18	18	20	20	20	22	22	22	24	24	24	26	26	26	28	28	28	30	30	30	32	32	32	34	34	34	34		
0.476-0.500	08	10	12	14	14	14	14	16	16	18	18	18	18	20	20	22	22	22	22	24	24	26	26	26	26	28	28	30	30	30	30	32	32	34	34	34	34				
0.501-0.525	10	12	14	14	14	16	16	16	18	18	18	20	20	20	22	22	22	24	24	24	26	26	26	28	28	28	30	30	30	32	32	32	34	34	34	34					
0.526-0.550	10	12	14	16	16	16	16	18	18	20	20	20	20	22	22	24	24	24	24	26	26	28	28	28	28	30	30	32	32	32	32	34	34	34							
0.551-0.575	12	14	16	16	16	18	18	18	20	20	20	22	22	22	24	24	24	26	26	26	28	28	28	30	30	30	32	32	32	34	34	34	34								
0.576-0.600	12	14	16	18	18	18	18	20	20	22	22	22	22	24	24	26	26	26	26	28	28	30	30	30	30	32	32	34	34	34	34	34									
0.601-0.625	14	16	18	18	18	20	20	20	22	22	22	24	24	24	26	26	26	28	28	28	30	30	30	32	32	32	34	34	34	34											
0.626-0.650	14	16	18	20	20	20	20	22	22	24	24	24	24	26	26	28	28	28	28	30	30	32	32	32	32	34	34	34													
0.651-0.675	16	18	20	20	20	22	22	22	24	24	24	26	26	26	28	28	28	30	30	30	32	32	32	34	34	34	34														
0.676-0.700	16	18	20	22	22	22	22	24	24	26	26	26	26	28	28	30	30	30	30	32	32	34	34	34	34	34															
0.701-0.725	18	20	22	22	22	24	24	24	26	26	26	28	28	28	30	30	30	32	32	32	34	34	34	34																	
0.726-0.750	18	20	22	24	24	24	24	26	26	28	28	28	28	30	30	32	32	32	32	34	34	34																			
0.751-0.775	20	22	24	24	24	26	26	26	28	28	28	30	30	30	32	32	32	34	34	34	34																				
0.776-0.800	20	22	24	26	26	26	26	28	28	30	30	30	30	32	32	34	34	34	34	34																					
0.801-0.825	22	24	26	26	26	28	28	28	30	30	30	32	32	32	34	34	34	34																							
0.826-0.850	22	24	26	28	28	28	28	30	30	32	32	32	32	34	34	34																									
0.851-0.875	24	26	28	28	28	30	30	30	32	32	32	34	34	34	34																										
0.876-0.900	24	26	28	30	30	30	30	32	32	34	34	34	34	34																											
0.901-0.925	26	28	30	30	30	32	32	32	34	34	34	34																													
0.926-0.950	26	28	30	32	32	32	32	34	34	34																															
0.951-0.975	28	30	32	32	32	34	34	34	34																																
0.976-1.000	28	30	32	34	34	34	34	34																																	
1.001-1.025	30	32	34	34	34	34																																			
1.026-1.050	30	32	34	34																																					
1.051-1.075	32	34	34																																						
1.076-1.100	32	34																																							
1.101-1.125	34	34																																							
1.126-1.180	34																																								

New shim thickness mm (in.)

Shim No.	Thickness	Shim No.	Thickness
02	2.50 (0.0984)	20	2.95 (0.1161)
04	2.55 (0.1004)	22	3.00 (0.1181)
06	2.60 (0.1024)	24	3.05 (0.1201)
08	2.65 (0.1043)	26	3.10 (0.1220)
10	2.70 (0.1063)	28	3.15 (0.1240)
12	2.75 (0.1083)	30	3.20 (0.1260)
14	2.80 (0.1102)	32	3.25 (0.1280)
16	2.85 (0.1122)	34	3.30 (0.1299)
18	2.90 (0.1142)		

Exhaust valve clearance (Cold):
0.28 – 0.38 mm (0.011 – 0.015 in.)

EXAMPLE: The 2.800 mm (0.1102 in.) shim is installed, and the measured clearance is 0.450 mm (0.0177 in.). Replace the 2.800 mm (0.1102 in.) shim with a No.18 shim.

INSPECTION AND ADJUSTMENT OF IGNITION TIMING

3S-GTE (See pages IG-17 and 18)
5S-FE (See pages IG-21 and 22)

Ignition timing:
10° BTDC @ idle
(w/ Terminals TE1 and E1 connected)

INSPECTION OF IDLE SPEED (3S-GTE)

INITIAL CONDITIONS

(See Inspection and Adjustment of Idle Speed (5S-FE))

Idle speed: 800 ± 50 rpm

INSPECTION AND ADJUSTMENT OF IDLE SPEED (5S-FE)

(See HINT on page FI-18)

1. INITIAL CONDITIONS

(a) Engine at normal operating temperature

(b) Air cleaner installed

(c) All pipes and hoses of air induction system connected

(d) All vacuum lines connected

HINT: All vacuum hoses for EGR systems, etc. should be properly connected.

(e) EFI system wiring connectors fully plugged

(f) All operating accessories switched OFF

(g) Transmission in neutral range

2. CHECK ISC SYSTEM (See page FI-151)

3. CONNECT TACHOMETER (See page IG-21)

4. ADJUST IDLE SPEED

(a) Using SST, connect terminals TE1 and E1 of the check connector.

SST 09843-18020

HINT: Decrease the rpm after the engine maintains a speed of the 1,000 – 1,300 rpm for 5 seconds.

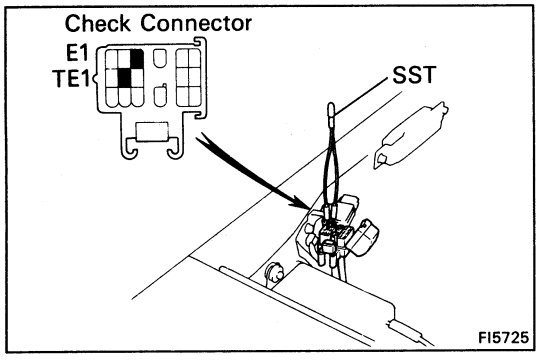

(b) Check the idle speed.

Idle speed: 650 rpm or more

(c) If the idle speed is not as specified, adjust the idle speed by turning the IDLE SPEED ADJUSTING SCREW.

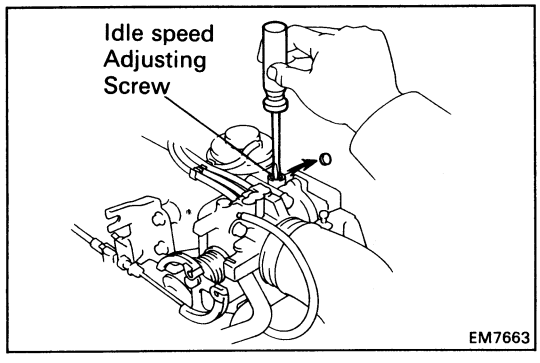

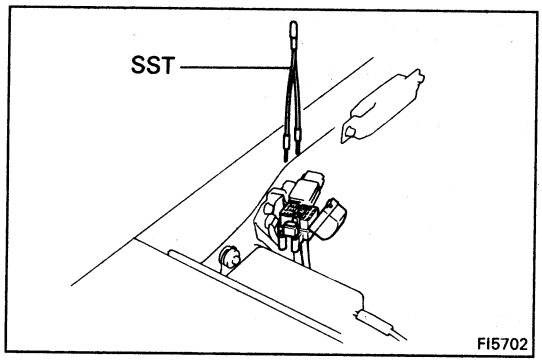

(d) Remove SST.
SST 09843-18020

5. FURTHER CHECK IDLE SPEED

Idle speed: **750 ± 50 rpm USA M/T**
700 ± 50 rpm USA A/T
850 ± 50 rpm CANADA M/T
750 ± 50 rpm CANADA A/T

If the idle speed is not within these values, carry out either of the below listed procedures and then recheck the idle speed.

Carry out a driving test, including stop-go several times at a speed above 10 km/h, or start the engine, idle for 30 seconds and then turn the engine off repeatedly. By doing this, idle data will be stored in the ISC and the idle rpm will be at specified value.

TOYOTA-VARIABLE INDUCTION SYSTEM (T-VIS) (3S-GTE)

INSPECTION OF T-VIS

1. **WARM UP AND STOP ENGINE**

   Allow the engine to warm up to normal operating temperature.

2. **CONNECT TACHOMETER (See page IG-17)**

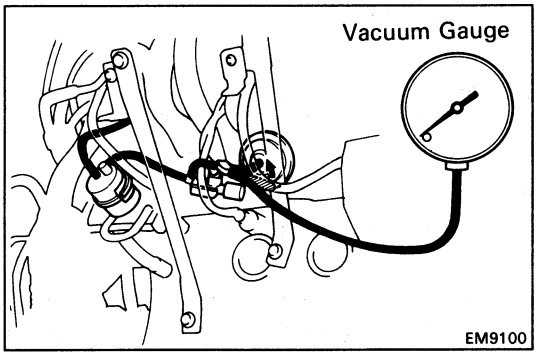

3. **CONNECT VACUUM GAUGE**

   Using a 3-way connector, connect the vacuum gauge to the hose between the VSV and actuator.

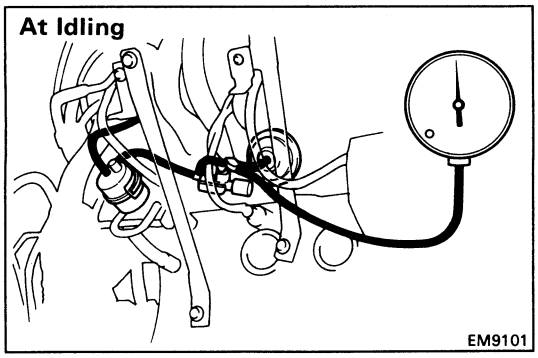

4. **INSPECT T-VIS OPERATION**

   (a) Check that the vacuum gauge indicates vacuum at idling.

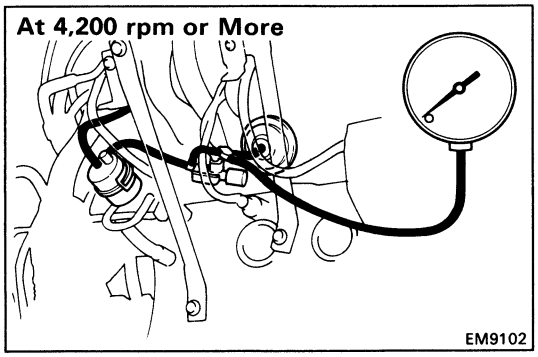

   (b) Check that the vacuum gauge indicates zero at 4,200 rpm or more.

   HINT: If regular unleaded gasoline is used, the vacuum gauge also indicates zero below 4,200 rpm.

IDLE AND/OR 2,500 RPM HC/CO CONCENTRATION CHECK METHOD

HINT: This check is used only to determine whether or not the idle HC/CO complies with regulations.

1. INITIAL CONDITIONS

(a) Engine at normal operating temperature

(b) Air cleaner installed

(c) All pipes and hoses of air induction system connected

(d) All accessories switched OFF

(e) All vacuum lines properly connected

HINT: All vacuum hoses for EGR systems, etc. should be properly connected.

(f) EFI system wiring connectors fully plugged

(g) Ignition timing set correctly

(h) Transmission in neutral

(i) Tachometer and HC/CO meter calibrated and at hand.

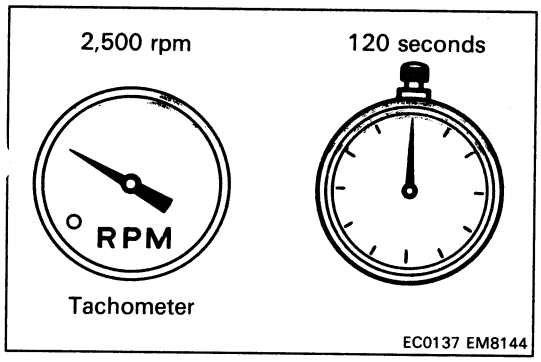

2. START ENGINE

3. RACE ENGINE AT 2,500 RPM FOR APPROX. 120 SECOUNDS

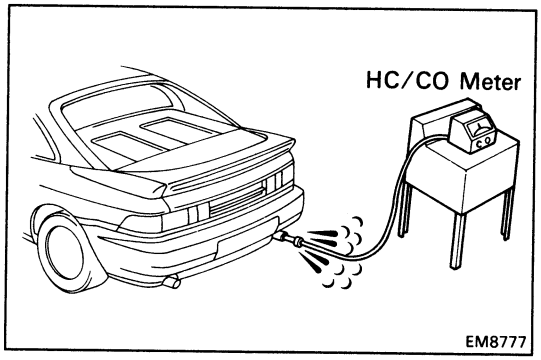

4. INSERT HC/CO METER TESTING PROBE INTO TAILPIPE AT LEAST 40 cm (1.3 ft)

5. CHECK HC/CO CONCENTRATION AT IDLE AND/OR 2,500 RPM

Complete the measuring within three minutes.

HINT: When performing the 2 mode (2,500 rpm and idle) test, follow the measurement order prescribed by the regulations.

If the HC/CO concentration at 2,500 rpm does not conform to regulations, try the following procedure.

Race the engine again at 2,500 rpm for approx. 1 minute and quickly repeat steps 4 and 5 above. This may correct the problem.

Troubleshooting

If the HC/CO concentration does not comply with regulations, perform troubleshooting in the order given below.

(a) Check oxygen sensor operation.
(See page FI-173)

(b) See the table below for possible causes, and then inspect and correct the applicable causes if necessary.

HC	CO	Problems	Causes
High	Normal	Rough idle	1. Faulty ignitions ● Incorrect timing ● Fouled, shorted or improperly gapped plugs ● Open or crossed high-tension cords ● Cracked distributor cap 2. Incorrect valve clearance 3. Leaky EGR valve 4. Leaky intake and exhaust valves 5. leaky cylinder
High	Low	Rough idle (Fluctuating HC reading)	1. Vacuum leaks ● PCV hose ● EGR valve ● Intake manifold ● T-VIS valve (3S-GTE) ● Throttle body ● ISC valve ● Brake booster line 2. Lean mixture causing misfire
High	High	Rough idle (Black smoke from exhaust)	1. Restricted air filter 2. Faulty EFI systems ● Faulty pressure regulator ● Clogged fuel return line ● Defective water temp. sensor ● Defective air temp. sensor ● Faulty ECU ● Faulty injector ● Faulty cold start injector ● Faulty throttle position sensor ● Air flow meter

COMPRESSION CHECK

HINT: If there is lack of power, excessive oil consumption or poor fuel economy, measure the compression pressure.

1. **WARM UP AND STOP ENGINE**

   Allow the engine to warm up to normal operating temperature.

2. **(3S-GTE)**
   DISCONNECT SOLENOID RESISTOR CONNECTOR

3. **DISCONNECT COLD START INJECTOR CONNECTOR**

4. **DISCONNECT DISTRIBUTOR CONNECTOR**

5. **REMOVE SPARK PLUGS (See page IG-6 or 11)**

6. **CHECK CYLINDER COMPRESSION PRESSURE**

   (a) Insert a compression gauge into the spark plug hole.

   (b) Fully open the throttle.

   (c) While cranking the engine, measure the compression pressure.

   HINT: Always use a fully charged battery to obtain engine speed of 250 rpm or more.

   (d) Repeat steps (a) through (c) for each cylinder.

   NOTICE: This measurement must be done in as short a time as possible.

   Compression pressure:

3S-GTE	**11.5 kg/cm² (164 psi, 1,128 kPa) or more**
5S-FE	**12.5 kg/cm² (178 psi, 1,226 kPa) or more**

   Minimum pressure:

3S-GTE	**9.0 kg/cm² (128 psi, 883 kPa)**
5S-FE	**10.0 kg/cm² (142 psi, 981 kPa)**

   Difference between each cylinder:
   1.0 kg/cm² (14 psi, 98 kPa) or less

   (e) If the cylinder compression in one or more cylinders are low, pour a small amount of engine oil into the cylinder through the spark plug hole and repeat steps (a) through (c) for cylinders with low compression.

   - If adding oil helps the compression, chances are that the piston rings and/or cylinder bore are worn or damaged.
   - If pressure stays low, a valve may be sticking or seating is improper, or there may be leakage past the gasket.

7. **REINSTALL SPARK PLUGS (See page IG-8 or 12)**
   Torque: 180 kg-cm (13 ft-lb, 18 N·m)

8. **RECONNECT DISTRIBUTOR CONNECTOR**

9. **RECONNECT COLD START INJECTOR CONNECTOR**

10. **(3S-GTE)**
    RECONNECT SOLENOID RESISTOR CONNECTOR

3S-GTE

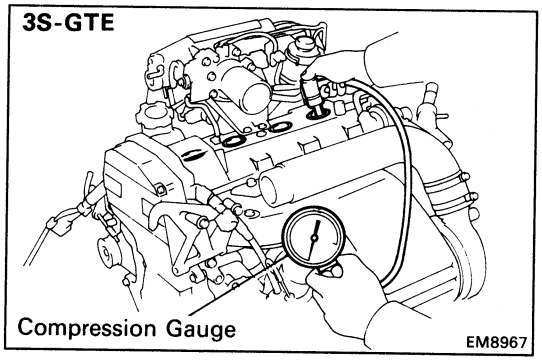

Compression Gauge EM8967

5S-FE

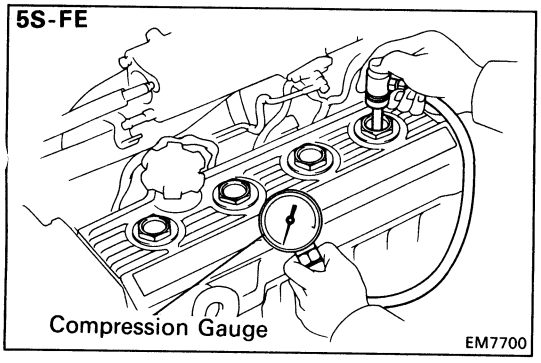

Compression Gauge EM7700

TIMING BELT (3S-GTE)

COMPONENTS

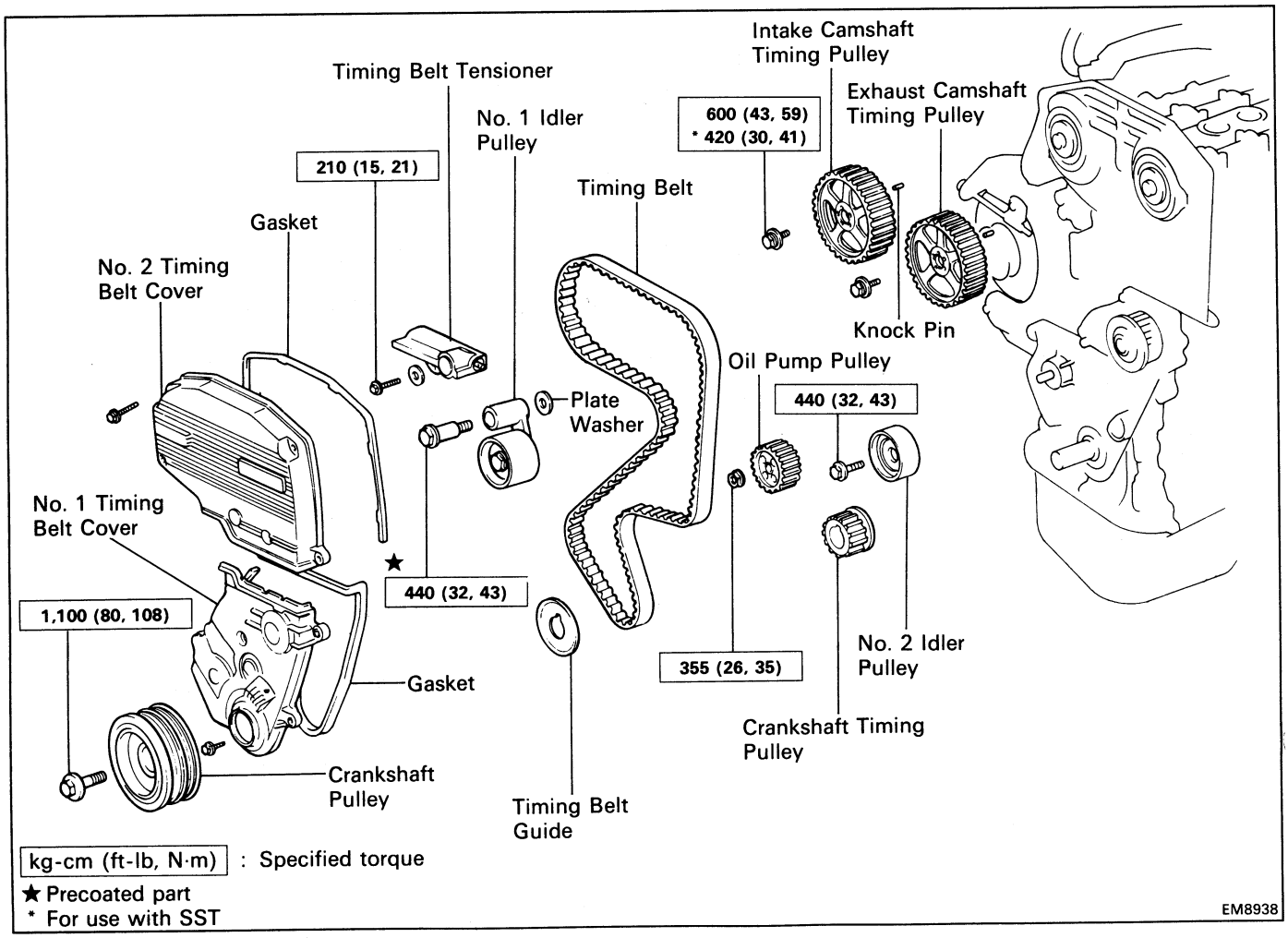

REMOVAL OF TIMING BELT

1. **DISCONNECT CABLE FROM NEGATIVE TERMINAL OF BATTERY**

   CAUTION: Work must be started after approx. 20 seconds or longer from the time the ignition switch is turned to the "LOCK" position and the negative (–) terminal cable is disconnected from the battery.

2. **REMOVE ENGINE UNDER COVERS**

3. **REMOVE RH ENGINE HOOD SIDE PANEL**

4. **REMOVE SUSPENSION UPPER BRACE**
   (See step 8 on page EM-134)

5. **REMOVE CRUISE CONTROL ACTUATOR (w/ CRUISE CONTROL SYSTEM) AND ACCELERATOR LINKAGE**
   (See step 13 on page EM-135)

6. **REMOVE INTERCOOLER**
   (See steps 4, 5 and 7 to 13 on pages TC-20 to 22)

7. **REMOVE RH FRONT WHEEL**

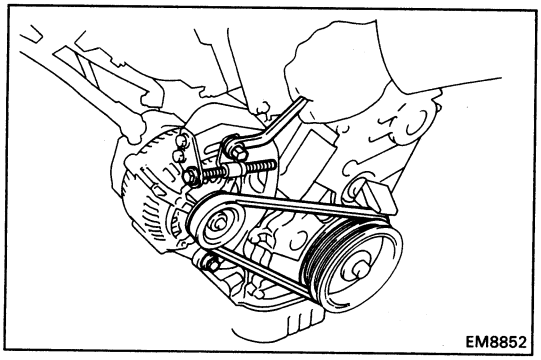

8. REMOVE ALTERNATOR DRIVE BELT

(a) Loosen the pivot and adjusting lock bolts.

(b) Loosen the adjusting bolt, and remove the drive belt.

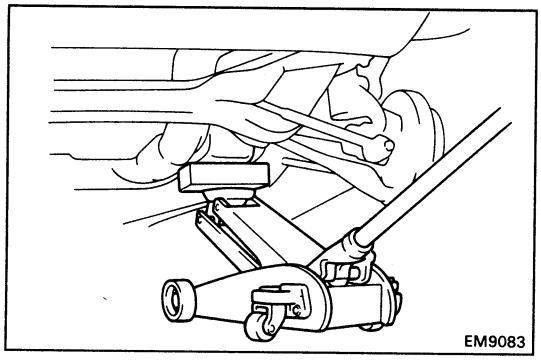

9. SLIGHTLY JACK UP ENGINE

Raise the engine enough to remove the weight from the engine mounting on the right side.

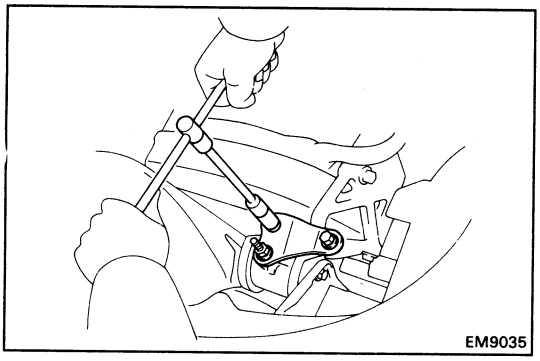

10. REMOVE RH ENGINE MOUNTING STAY

Remove the two bolts, nut and mounting stay.

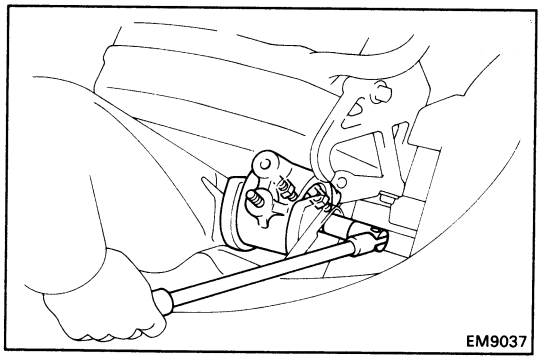

11. REMOVE RH ENGINE MOUNTING INSULATOR

Remove the through bolt, two nuts and mounting insulator.

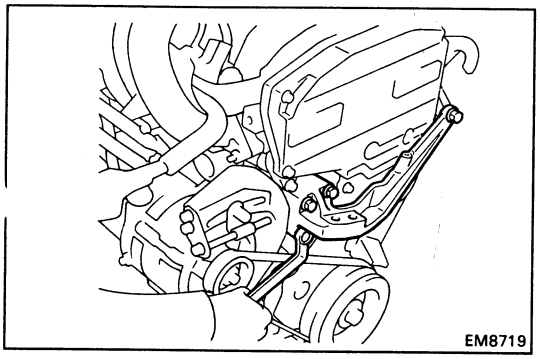

12. REMOVE RH ENGINE MOUNTING BRACKET

Remove the three bolts and mounting bracket.

HINT: Lower the jack and perform the operation with the engine fully up.

13. **REMOVE EGR VACUUM MODULATOR AND VSV**
(See step 22 on page EM-66)

14. **REMOVE THROTTLE BODY**
(See steps 5 to 8, 10 and 11 on pages FI-135 and 136)

15. **REMOVE HOSE CLAMP AND VTV CLAMP OF AIR BY-PASS VALVE**
(See steps 15 and 16 on page TC-9)

16. **REMOVE CYLINDER HEAD COVER**
(See step 35 on page EM-70)

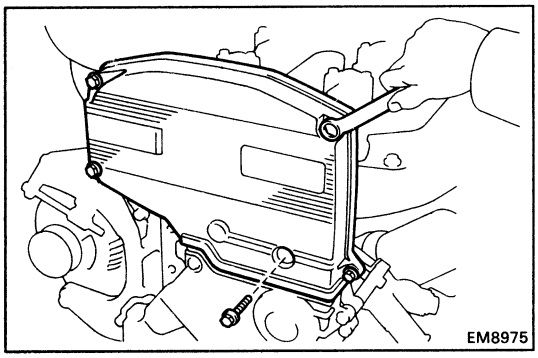

17. **REMOVE SPARK PLUGS (See page IG-7)**

18. **REMOVE NO.2 TIMING BELT COVER**
Remove the five screws, timing belt cover and gasket.

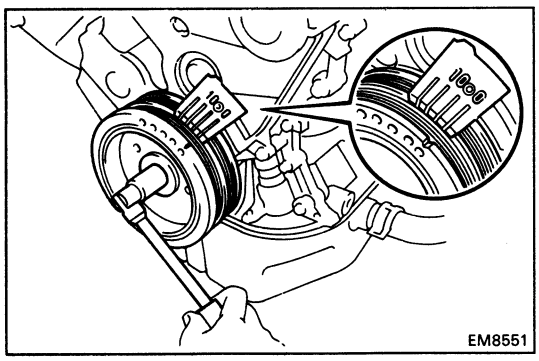

19. **SET NO.1 CYLINDER TO TDC/COMPRESSION**
(a) Turn the crankshaft pulley and align its groove with timing mark "0" of the No.1 timing belt cover.

NOTICE: Always turn the crankshaft clockwise.

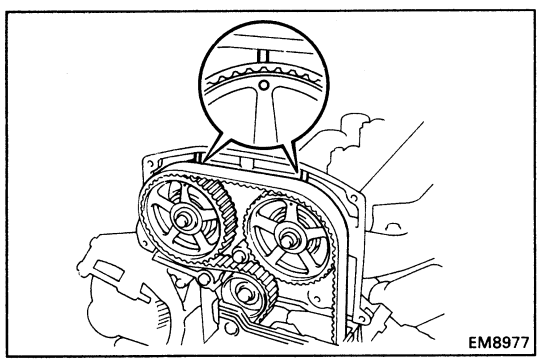

(b) Check that the timing marks of the camshaft timing pulleys are aligned with the timing marks of the No.3 timing belt cover.

If not, turn the crankshaft one revolution (360°).

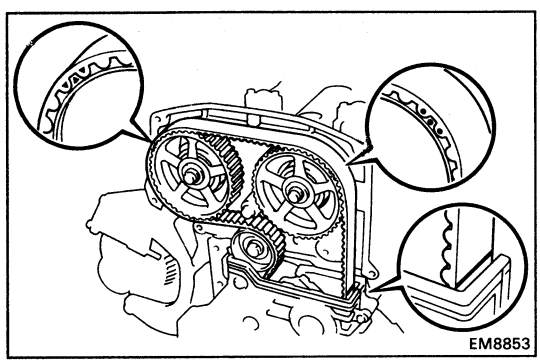

20. **REMOVE TIMING BELT FROM CAMSHAFT TIMING PULLEYS**
HINT:
- (Re-using timing belt)
Place matchmarks on the timing belt and camshaft timing pulleys, and place a matchmark on the timing belt to match the end of the No1 timing belt cover.

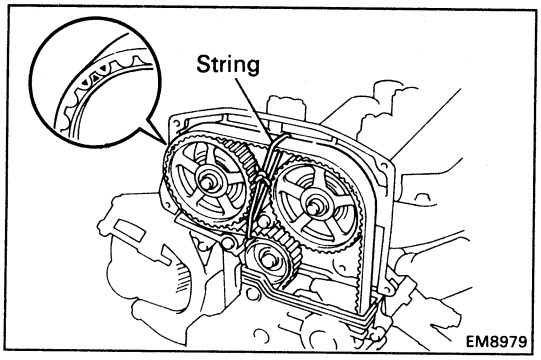

- (When replacing timing belt tensioner only)
  To avoid meshing of the timing belt and timing pulley, secure one with a string. And place the matchmarks on the timing belt and RH camshaft timing pulley.

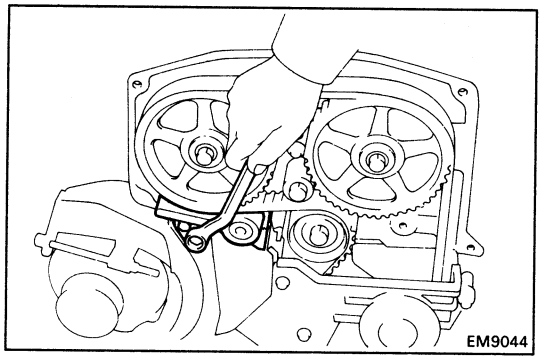

(a) Remove the two bolts and timing belt tensioner.

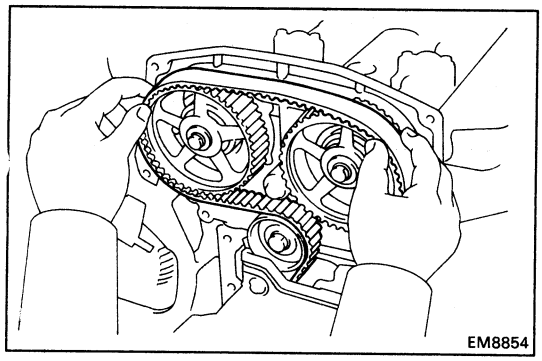

(b) Remove the timing belt from the camshaft timing pulley.

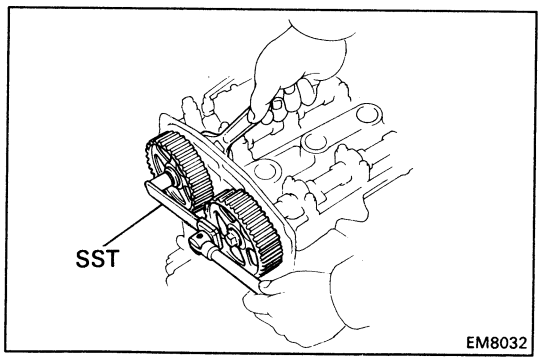

21. REMOVE CAMSHAFT TIMING PULLEYS

(a) Hold the hexagonal wrench head portion of the camshaft with a wrench, and remove the pulley mount bolts.

HINT (Intake camshaft timing pulley): Use SST.

SST 09249-63010

(b) Remove the camshaft pulleys and pins.

HINT: Arrange the intake and exhaust timing pulleys.

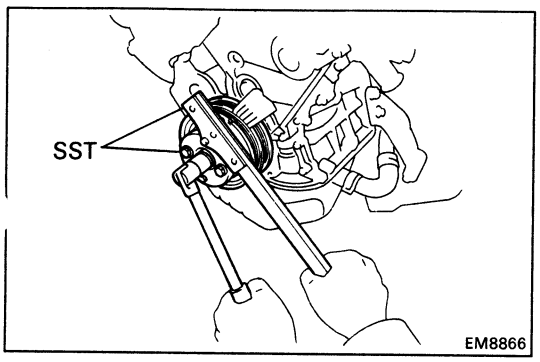

22. REMOVE CRANKSHAFT PULLEY

(a) Using SST, remove the pulley bolt.

SST 09213-54015 (90119-08216) and 09330-00021

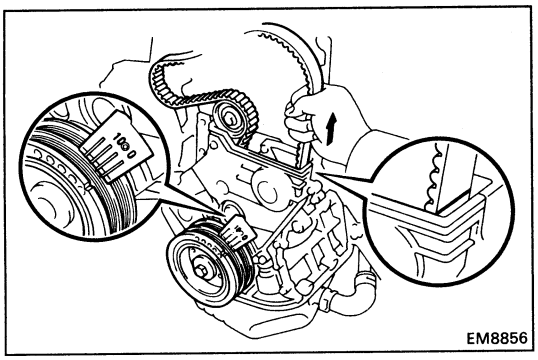

HINT (When re-using timing belt): After loosening the crankshaft pulley bolt, check that the timing belt matchmark aligns with the end of the No.1 timing belt cover when the crankshaft pulley groove is aligned with the timing mark "0" of the No.1 timing belt cover. If the matchmark does not align, align as follows:

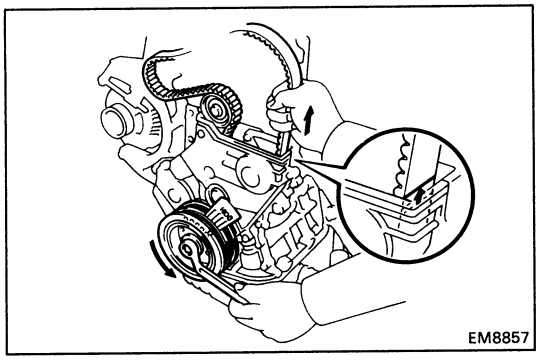

(When matchmark is out of alignment clockwise)

- Align the matchmark by pulling the timing belt up on the water pump pulley side while turning the crankshaft pulley counterclockwise.

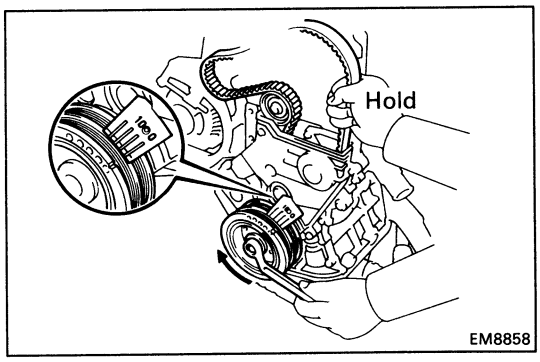

- After aligning the matchmark, hold the timing belt. And turn the crankshaft pulley clockwise, and align its groove with timing mark "0" of the No.1 timing belt cover.

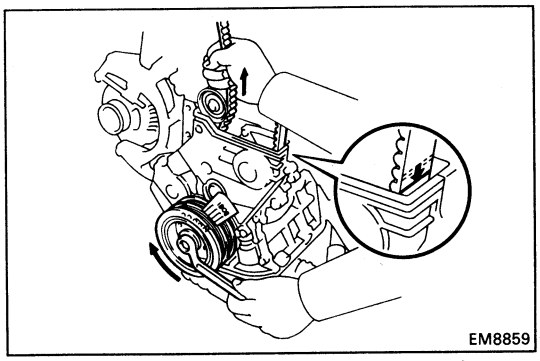

(When matchmark is out of alignment counterclockwise)

- Align the matchmark by pulling the timing belt up on the No.1 idler pulley side while turning the crankshaft pulley clockwise.

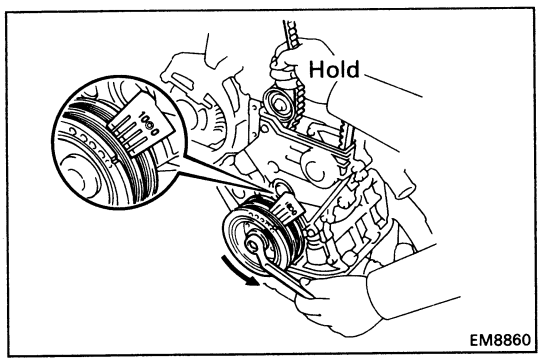

- After aligning the matchmark, hold the timing belt. And turn the crankshaft pulley counterclockwise, and align its groove with timing mark "0" of the No.1 timing belt cover.

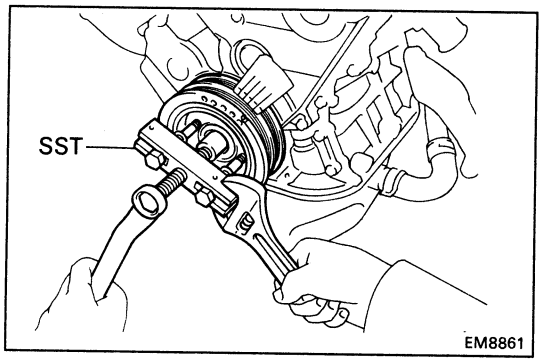

(b) Using SST, remove the pulley.

SST 09213-31021

HINT (When re-using timing belt): Remove the pulley without turning it.

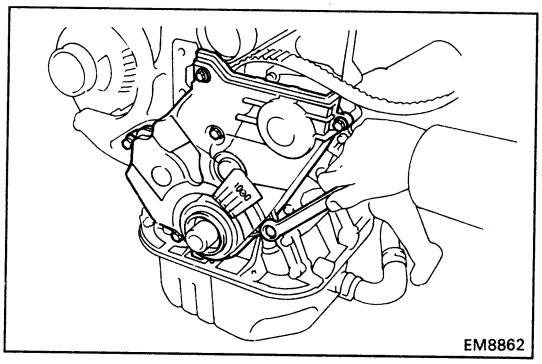

23. REMOVE NO.1 TIMING BELT COVER

Remove the six bolts, timing belt cover and gasket.

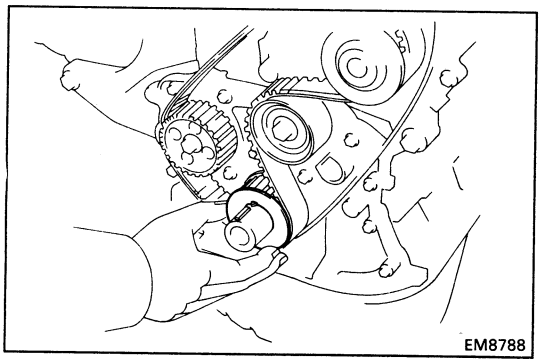

24. REMOVE TIMING BELT GUIDE

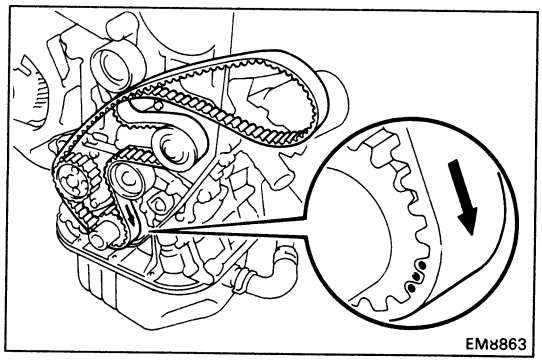

25. REMOVE TIMING BELT

HINT (When re-using timing belt): Draw a direction arrow on the timing belt (in the direction of engine revolution), and place matchmarks on the timing belt and crankshaft timing pulley.

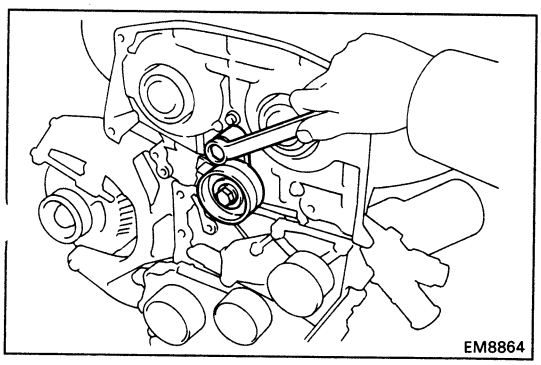

26. REMOVE NO.1 IDLER PULLEY

Remove the pivot bolt, pulley and plate washer.

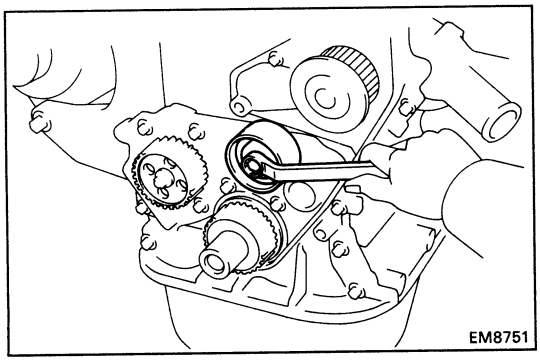

27. REMOVE NO.2 IDLER PULLEY

Remove the bolt and pulley.

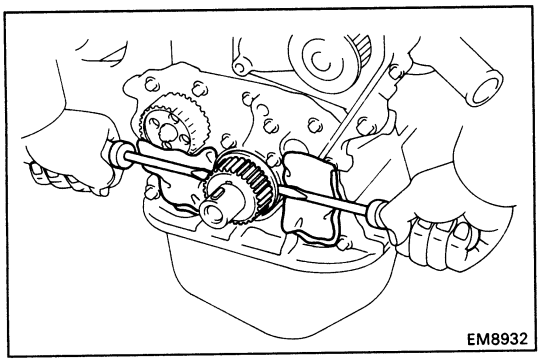

28. REMOVE CRANKSHAFT TIMING PULLEY

If the pulley cannot be removed by hand, use two screwdrivers.

HINT: Position shop rags as shown to prevent damage.

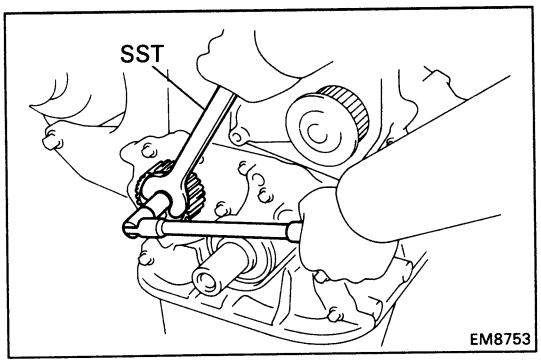

29. REMOVE OIL PUMP PULLEY

Using SST, remove the nut and pulley.

SST 09616-30011

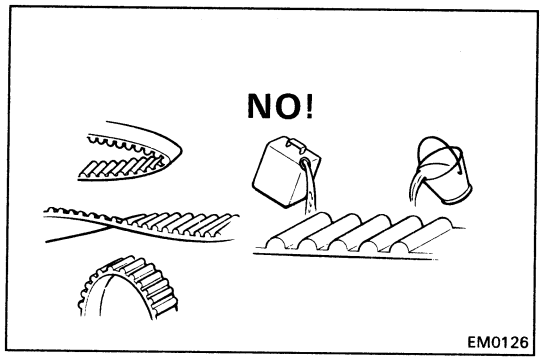

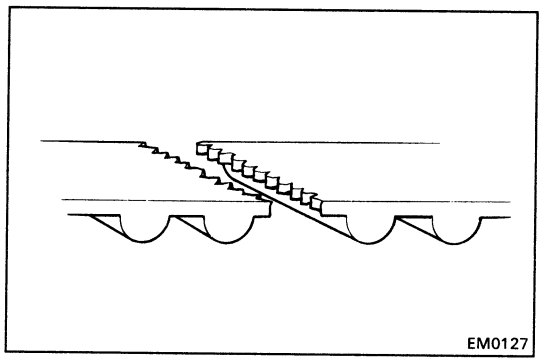

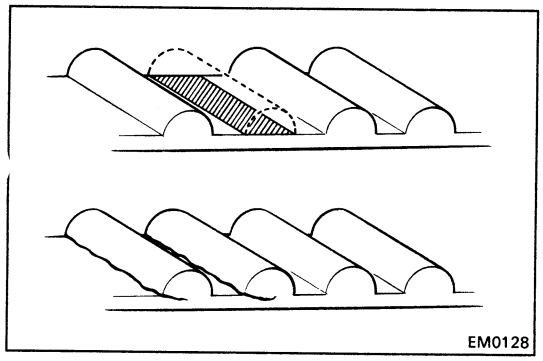

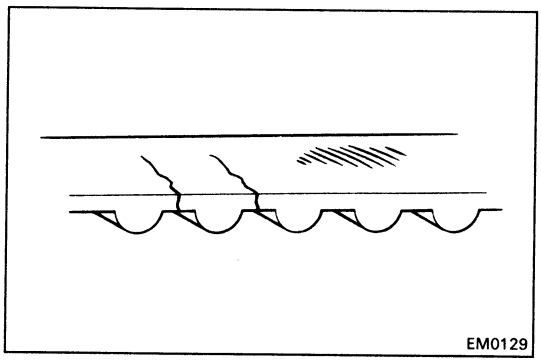

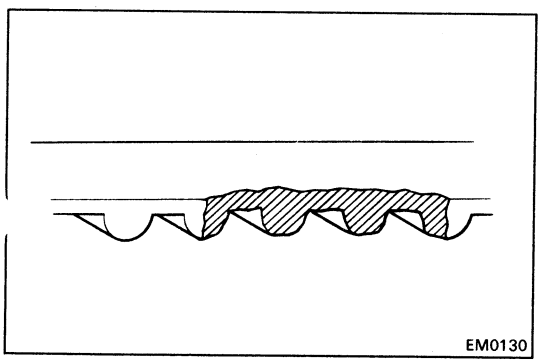

INSPECTION OF TIMING BELT COMPONENTS

1. INSPECT TIMING BELT

NOTICE:

- **Do not bend, twist or turn the timing belt inside out.**
- **Do not allow the timing belt to come into contact with oil, water or steam.**
- **Do not utilize timing belt tension when installing or removing the mount bolt of the camshaft timing pulley.**

If there are any defects as shown in the illustrations, check the following points:

(a) Premature parting

- Check for proper installation.
- Check the timing cover gasket for damage and proper installation.

(b) If the belt teeth are cracked or damaged, check to see if either the camshaft or water pump is locked.

(c) If there is noticeable wear or cracks on the belt face, check to see if there are nicks on the side of the idler pulley lock.

(d) If there is wear or damage on only one side of the belt, check the belt guide and the alignment of each pulley.

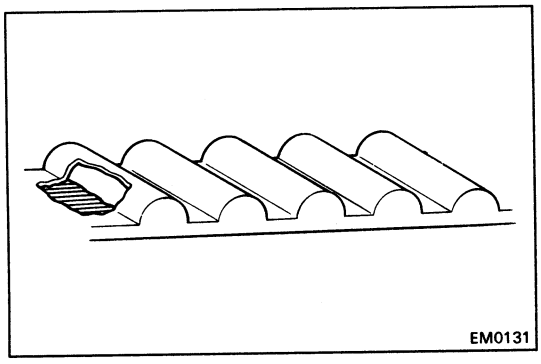
EM0131

(e) If there is noticeable wear on the belt teeth, check the timing cover for damage, correct gasket installation and foreign material on the pulley teeth.

If necessary, replace the timing belt.

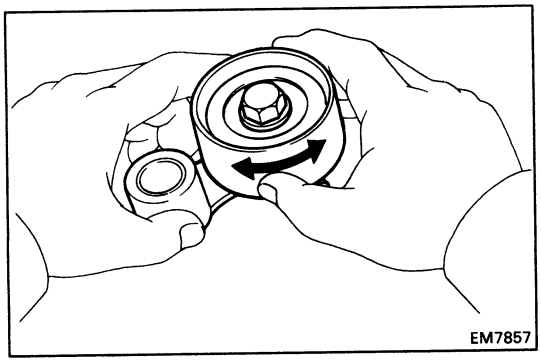
EM7857

2. INSPECT IDLER PULLEYS

Check the turning smoothness of the idler pulley.

If necessary, replace the idler pulley.

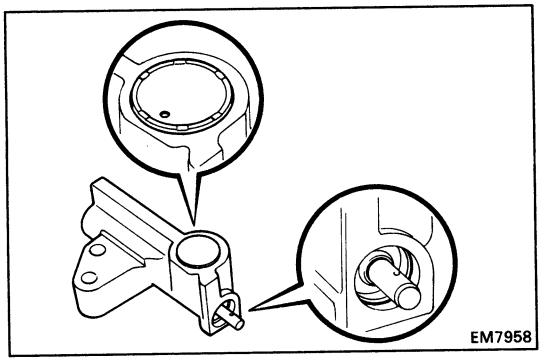
EM7958

3. INSPECT TIMING BELT TENSIONER

(a) Visually check tensioner for oil leakage.

HINT: If there is only a small trace of oil on the seal of the push rod, the tensioner is all right.

If leakage is found, replace the tensioner.

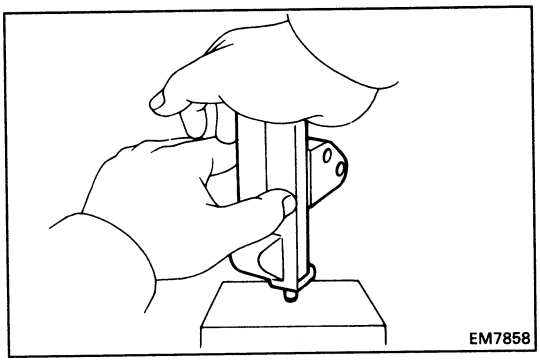
EM7858

(b) Hold the tensioner with both hands, and push the push rod strongly againt the floor or wall to check that it doesn't move.

If the push rod moves, replace the tensioner.

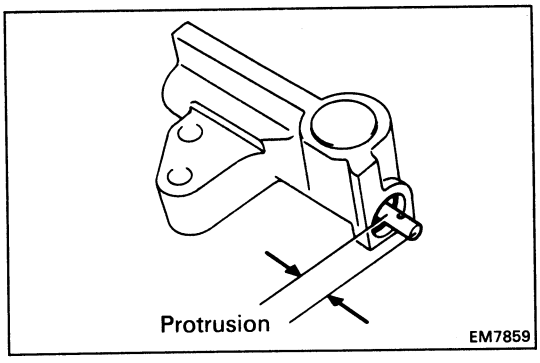

EM7859

(c) Measure the protrusion of the push rod from the housing end.

Protrusion: 8.5 – 9.5 mm (0.335 – 0.374 in.)

If the protrusion is not as specified, replace the tensioner.

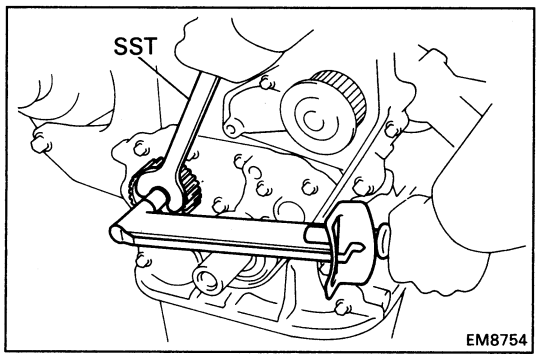

INSTALLATION OF TIMING BELT

(See page EM-26)

1. INSTALL OIL PUMP PULLEY

(a) Align the cutouts of the pulley and shaft, and slide the pulley.

(b) Using SST, install the nut.

SST 09616-30011

Torque: 355 kg-cm (26 ft-lb, 35 N·m)

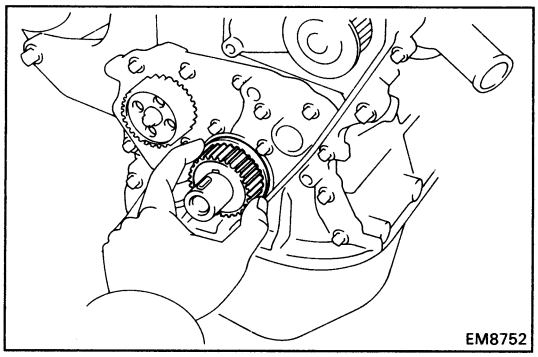

2. INSTALL CRANKSHAFT TIMING PULLEY

(a) Align the pulley set key with the key groove of the pulley.

(b) Slide on the timing pulley facing the flange side inward.

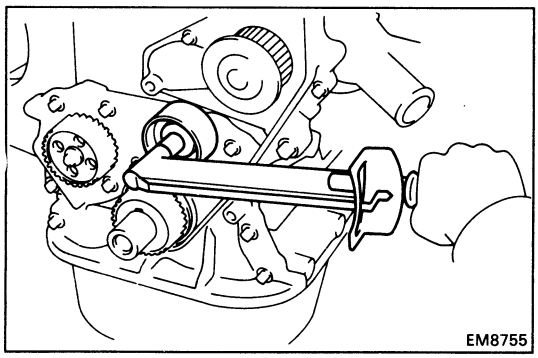

3. INSTALL NO.2 IDLER PULLEY

(a) Install the pulley with the bolt.

Torque: 440 kg-cm (32 ft-lb, 43 N·m)

(b) Check that the idler pulley moves smoothly.

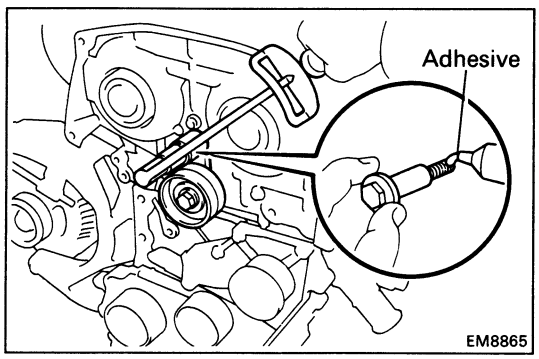

4. INSTALL NO.1 IDLER PULLEY

(a) Apply adhesive to two or three threads of the pivot bolt.

Adhesive: Part No. 08833-00080, THREE BOND 1344, LOCTITE 242 or equivalent

(b) Install the plate washer and pulley with the pivot bolt.

Torque: 440 kg-cm (32 ft-lb, 43 N·m)

(c) Check that the pulley bracket moves smoothly.

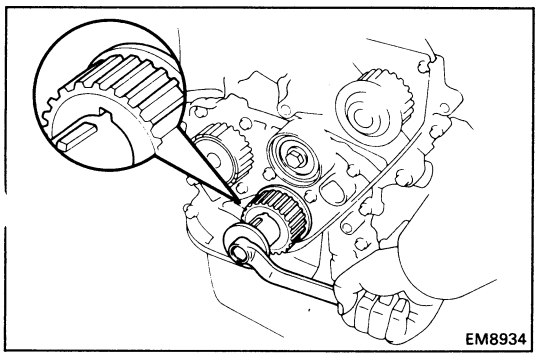

5. TEMPORARILY INSTALL TIMING BELT

NOTICE: The engine should be cold.

(a) Using the crankshaft pulley bolt, turn the crankshaft and position the key groove of the crankshaft timing pulley upward.

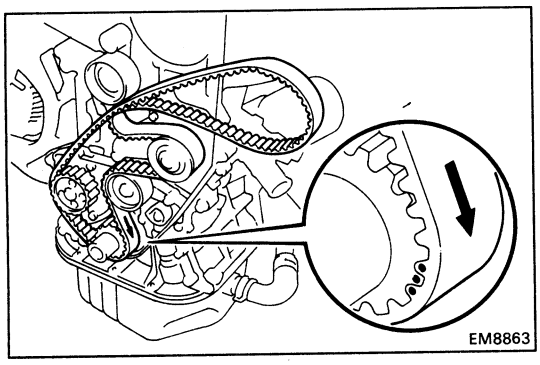

(b) Remove any oil or water on the crankshaft pulley, oil pump pulley, water pump pulley, No.1 idler pulley, No.2 idler pulley, and keep them clean.

(c) Install the timing belt on the crankshaft timing pulley, oil pump pulley, No.2 idler pulley, water pump pulley and No.1 idler pulley.

HINT (When re-using timing belt): Align the matchmarks of the camshaft timing pulley and timing belt, and install the belt with the arrow pointing in the direction of engine revolution.

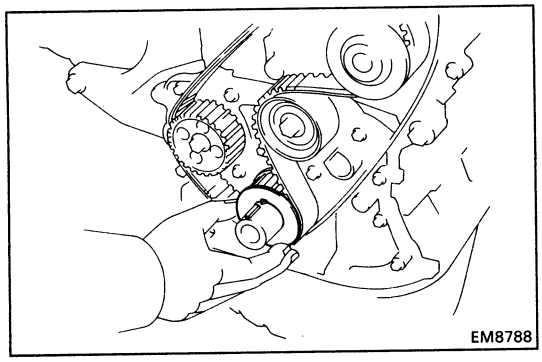

6. INSTALL TIMING BELT GUIDE

Install the guide, facing the cup side outward.

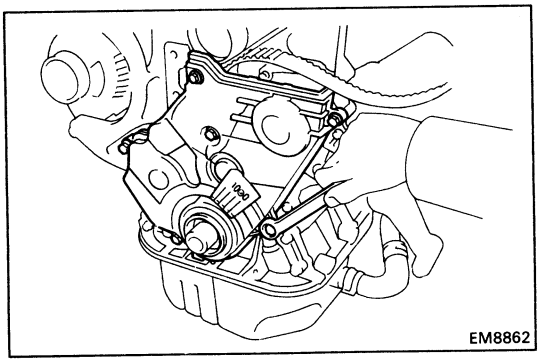

7. INSTALL NO.1 TIMING BELT COVER

(a) Install the gasket to the timing belt cover.

(b) Install the timing belt cover with the six bolts.

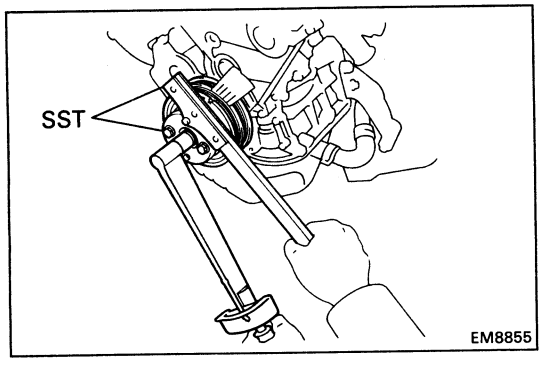

8. INSTALL CRANKSHAFT PULLEY

(a) Align the pulley set key with the key groove of the pulley, and slide on the pulley.

(b) Using SST, install and torque the bolt.

SST 09213-54015 (90119-08216) and 09330-00021

Torque: 1,100 kg-cm (80 ft-lb, 108 N·m)

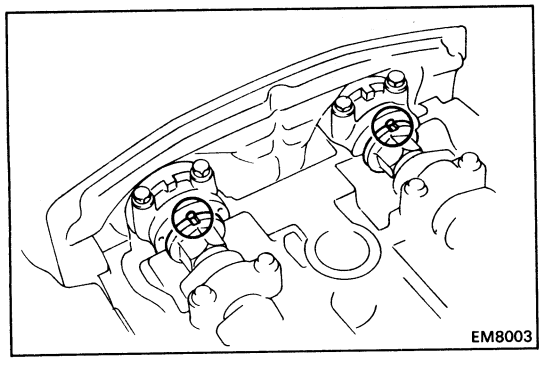

9. INSTALL CAMSHAFT TIMING PULLEYS

(a) Using a wrench, turn and align the groove of the camshaft with the drilled mark of the No.1 camshaft bearing cap.

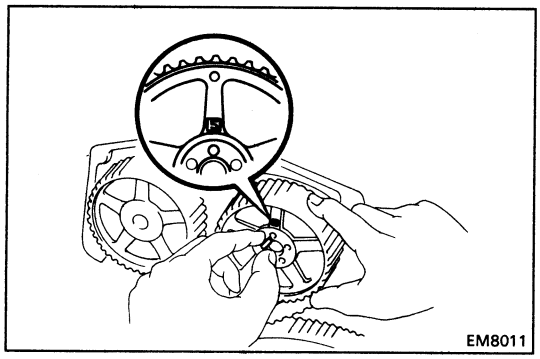

(b) Slide the timing pulley onto the camshaft, facing mark "S" upward.

(c) Align the pin holes of the camshaft and timing pulley, insert the knock pin.

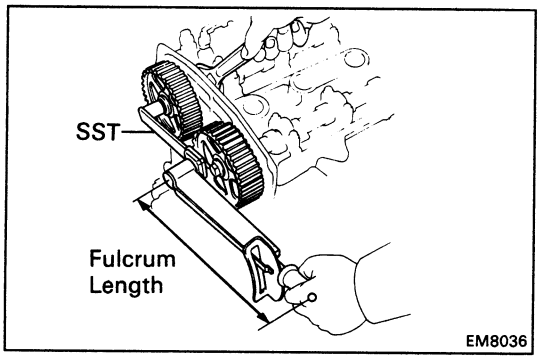

(d) Hold the hexagonal wrench head portion of the camshaft with a wrench, and tighten the bolts.

Torque: 600 kg-cm (43 ft-lb, 59 N·m)
420 kg-cm (30 ft-lb, 41 N·m) for SST

HINT (Intake camshaft timing pulley):
- Use SST.

SST 09249-63010

- Use a torque wrench with a fulcrum length of 340 mm (13.39 in.).

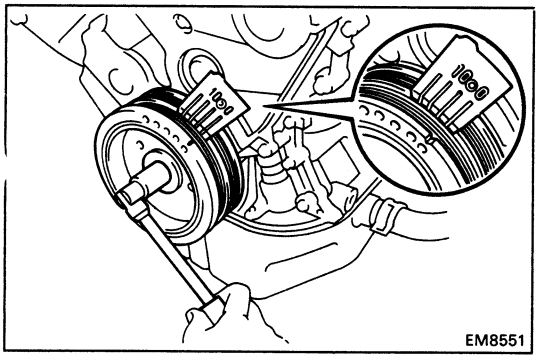

10. SET NO.1 CYLINDER TO TDC/COMPRESSION

(a) Turn the crankshaft pulley, and align its groove with timing mark "0" of the No.1 timing belt cover.

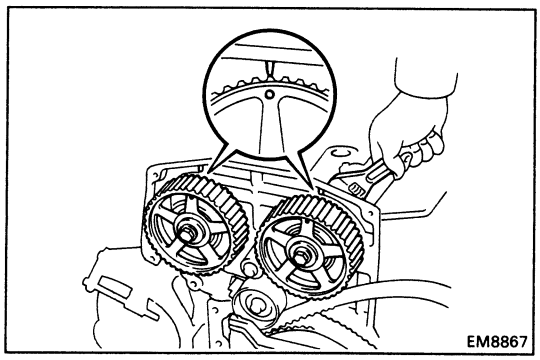

(b) Turn the camshaft, and align the timing marks of the camshaft timing pulleys and No.3 timing belt cover.

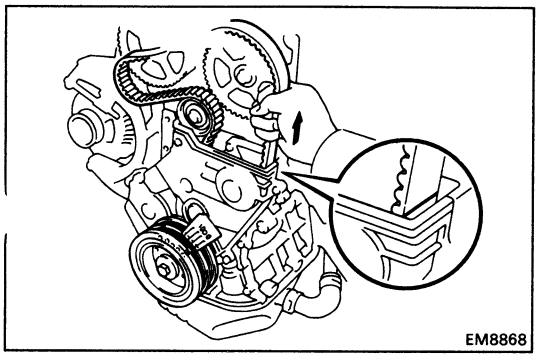

11. INSTALL TIMING BELT

HINT (When re-using timing belt):
- Check that the matchmark on the timing belt matches the end of the No.1 timing belt cover.

If the matchmark does not align, shift the meshing of the timing belt and crankshaft timing pulley until they align. (See page EM-23)

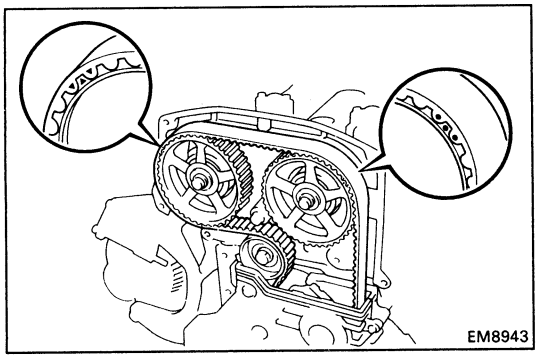

- Align the matchmarks of the timing belt and camshaft timing pulleys.

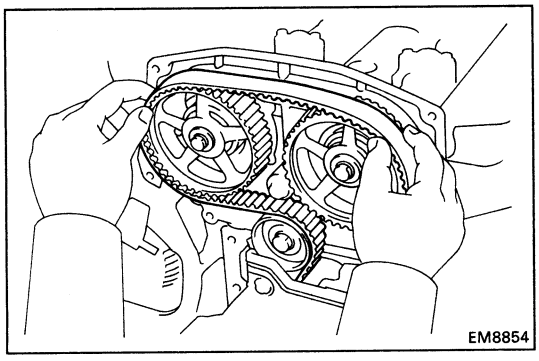

(a) Remove any oil or water on the camshaft timing pulley, and keep it clean.

(b) Install the timing belt, insure that there is tension between the crankshaft timing pulley and intake camshaft timing pulley.

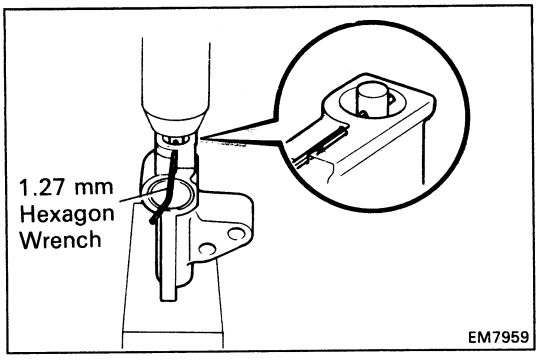

12. SET TIMING BELT TENSIONER

(a) Using a press, slowly press in the push rod using 100 – 1,000 kg (220 – 2,205 lb, 981 – 9,807 N) of pressure.

(b) Align the holes of the push rod and housing, pass a 1.27 mm hexagon wrench through the holes to keep the setting position of the push rod.

(c) Release the press.

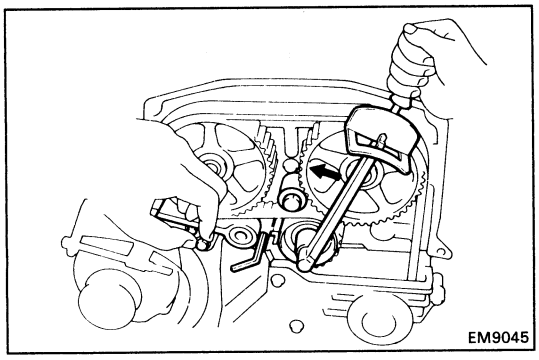

13. INSTALL TIMING BELT TENSIONER

(a) Turn the No.1 idler pulley bolt counterclockwise obtain the specified torque toward the left as far as No.1 idler pulley will go, and temporarily install the tensioner with the two bolts.

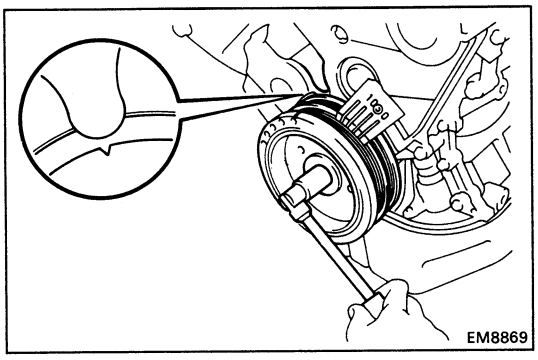

(b) Slowly turn the crankshaft pulley 5/6 revolution, and align its groove with the ATDC 60° mark of the No.1 timing belt cover.

NOTICE: Always turn the crankshaft clockwise.

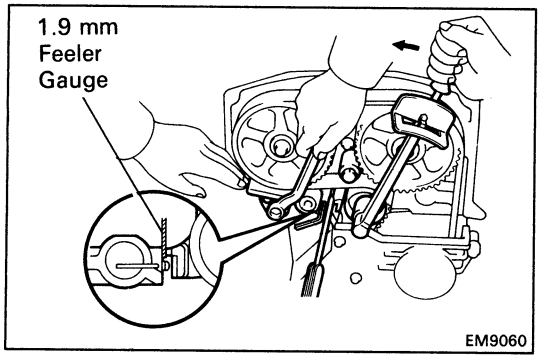

(c) Insert a 1.90 mm (0.075 in.) feeler gauge between the tensioner body and No.1 idler pulley stopper.

(d) Turn the No.1 idler pulley bolt counterclockwise to obtain the specified torque.

Torque: 180 kg-cm (13 ft-lb, 18 N·m)

NOTICE: To apply the correct torque, apply the torque wrench along the axis through the bolts of the No.1 idler pulley and exhaust camshaft timing pulley.

(e) While pushing the tensioner, alternately tighten the two bolts.

Torque: 210 kg-cm (15 ft-lb, 21 N·m)

(f) Remove the 1.27 mm hexagon wrench from the tensioner.

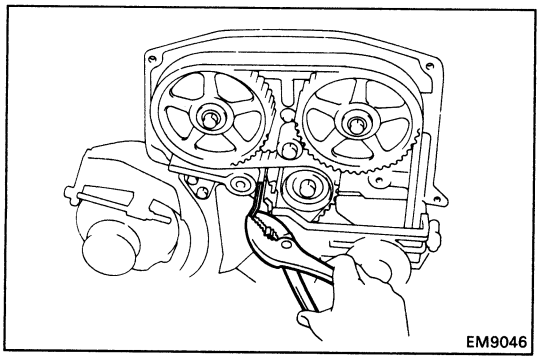

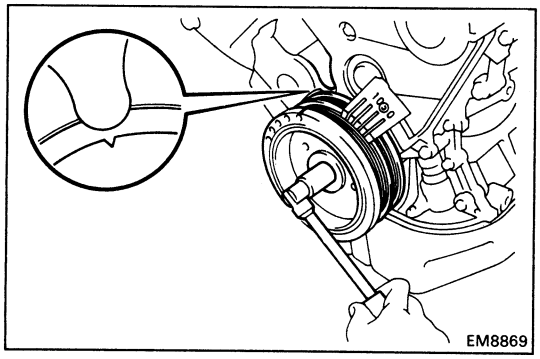

(g) Slowly turn the crankshaft pulley one revolution, and align its groove with the ATDC 60° mark of the No.1 timing belt cover.

NOTICE: Always turn the crankshaft clockwise.

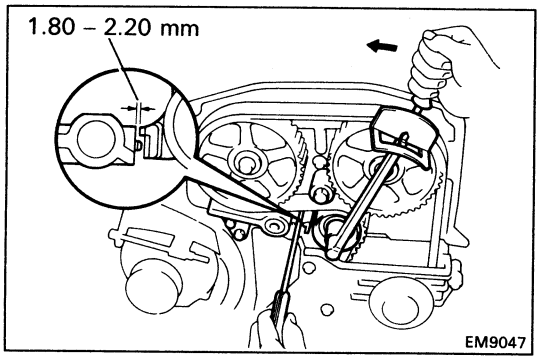

(h) Turn the No.1 idler pulley bolt counterclockwise to obtain the specified torque.

Torque: 180 kg-cm (13 ft-lb, 18 N·m)

NOTICE: To apply the correct torque, apply the torque wrench along the axis through the bolts of the No.1 idler pulley and exhaust camshaft timing pulley.

(i) Using a feeler gauge, check the specified clearance between the tensioner body and No.1 idler pulley stopper.

Clearance: 1.80 – 2.20 mm (0.071 – 0.087 in.)

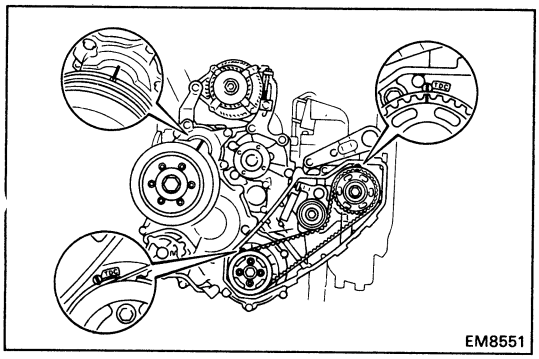

14. CHECK VALVE TIMING

(a) Slowly turn the crankshaft pulley two revolutions from TDC to TDC.

NOTICE: Always turn the crankshaft clockwise.

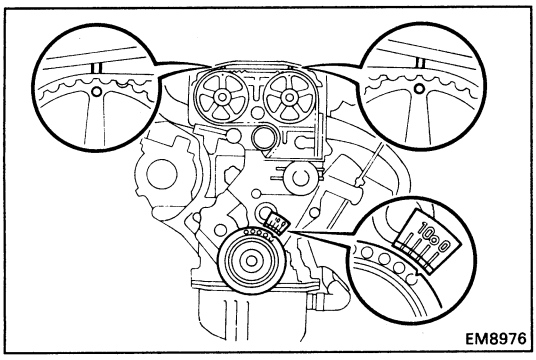

(b) Check that each pulley aligns with the timing marks as shown in the figure.

If the marks do not align, remove the timing belt and reinstall it.

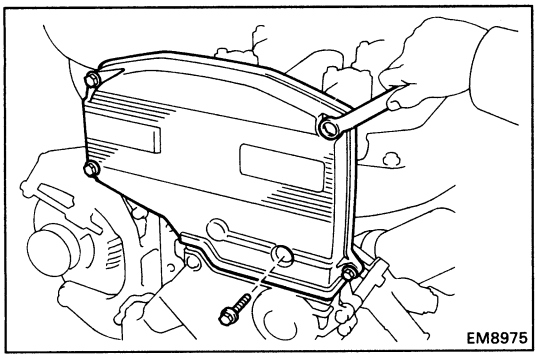

15. INSTALL NO.2 TIMING BELT COVER

(a) Install the gasket to the timing belt cover.

(b) Install the belt cover with the five bolts.

16. INSTALL SPARK PLUGS (See page IG-8)

Torque: 180 kg-cm (13 ft-lb, 18 N·m)

17. INSTALL HOSE CLAMP AND VTV CLAMP OF AIR BY-PASS VALVE
(See steps 13 and 14 on pages TC-19)

18. INSTALL CYLINDER HEAD COVER
(See step 7 on page EM-88)

19. INSTALL THROTTLE BODY
(See steps 2, 3 and 5 to 8 on pages FI-138 and 139)

20. INSTALL EGR VACUUM MODULATOR AND VSV
(See step 20 on page EM-92)

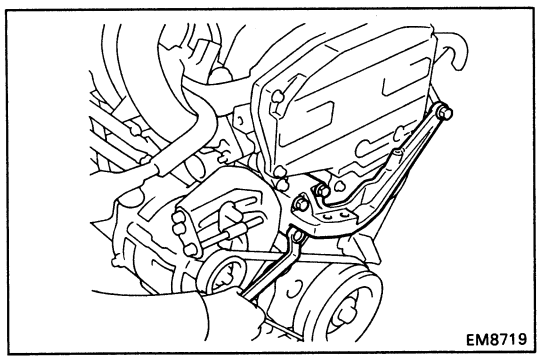

21. INSTALL RH ENGINE MOUNTING BRACKET

Install the mounting bracket with the three bolts.

Torque: 530 kg-cm (38 ft-lb, 52 N·m)

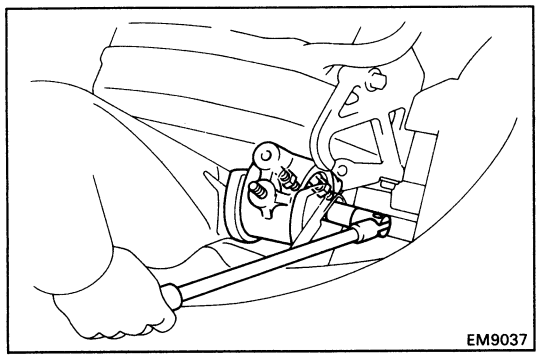

22. INSTALL RH ENGINE MOUNTING INSULATOR

Install the mounting insulator with the through bolt and two nuts.

Torque:

Nut	**530 kg-cm (38 ft-lb, 52 N·m)**
Through bolt	**800 kg-cm (58 ft-lb, 78 N·m)**

HINT: Lower the jack and perform the operation with the engine fully up.

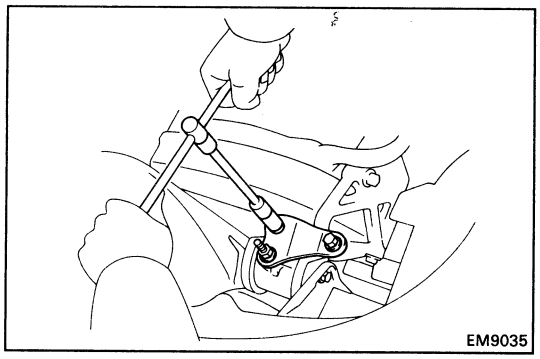
EM9035

23. INSTALL RH ENGINE MOUNTING STAY

Install the mounting stay with the two bolts and nut.

Torque: 740 kg-cm (54 ft-lb, 73 N·m)

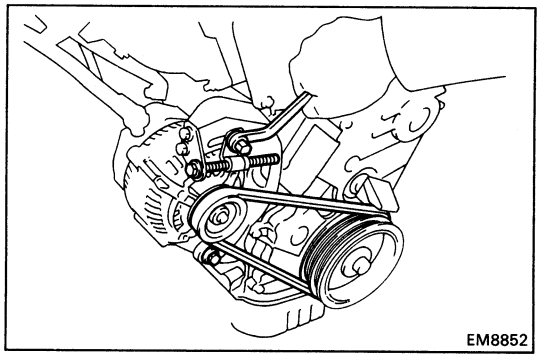
EM8852

24. INSTALL ALTERNATOR DRIVE BELT

Install the drive belt with the adjusting bolt, lock bolt and pivot bolt.

25. INSTALL RH FRONT WHEEL

26. INSTALL INTERCOOLER
(See steps 2 to 8, 10 and 11 on pages TC-23 to 25)

27. INSTALL CRUISE CONTROL ACTUATOR (w/ CRUISE CONTROL SYSTEM) AND ACCELERATOR LINKAGE
(See step 36 pages EM-178)

28. INSTALL SUSPENSION UPPER BRACE
(See step 41 pages EM-179)

29. INSTALL RH ENGINE HOOD SIDE PANEL

30. INSTALL ENGINE UNDER COVERS

31. CONNECT CABLE TO NEGATIVE TERMINAL OF BATTERY

32. CHECK AND ADJUST DRIVE BELTS

(a) Adjust the alternator drive belt.
(See page CH-3)

Drive belt tension: New belt 120 ± 20 lb
Used belt 104 ± 20 lb

(b) Adjust the A/C drive belt.

Drive belt tension: New belt 160 ± 20 lb
Used belt 100 ± 20 lb

ADJUSTMENT OF VALVE TIMING

1. **REMOVE NO.2 TIMING BELT COVER**
   (See steps 1 to 6 and 9 to 12 on pages EM-26 to 28)

2. **REMOVE SPARK PLUGS (See page IG-7)**

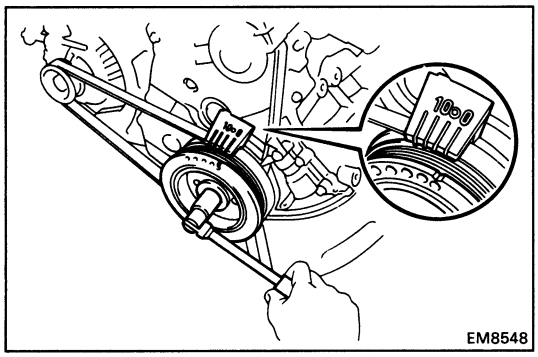

3. **CHECK CAMSHAFT TIMING PULLEY MARKS**

   (a) Turn the crankshaft pulley, and align its groove with timing mark "0" of the No.1 timing belt cover.

   NOTICE: Always turn the crankshaft clockwise.

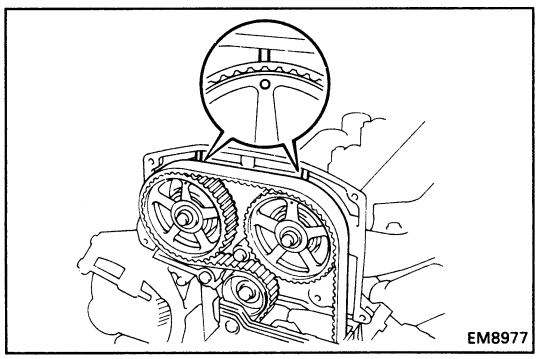

   (b) Check that the timing marks of the camshaft timing pulleys are aligned with the timing mark of the No.3 timing belt cover.

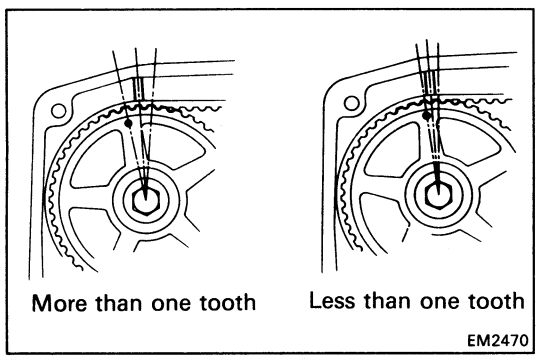

- If there is more than one timing pulley tooth between the timing marks, realign the timing marks in accordance with step 8.
- If the timing marks are aligned or the difference is less than one timing pulley tooth, proceed to step 9.

4. **REMOVE EGR VACUUM MODULATOR AND VSV**
   (See step 22 on page EM-66)

5. **REMOVE THROTTLE BODY**
   (See steps 5 to 8 and 9 to 11 on pages FI-135 and 136)

6. **REMOVE HOSE CLAMP AND VTV CLAMP OF AIR BY-PASS VALVE**
   (See steps 15 and 16 on page TC-9)

7. **REMOVE CYLINDER HEAD COVER**
   (See step 35 on page EM-70)

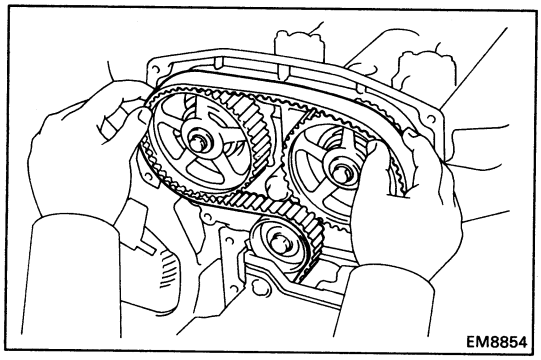

8. ADJUST CAMSHAFT TIMING PULLEY TIMING MARKS

(a) Remove the two bolts and timing belt tensioner.

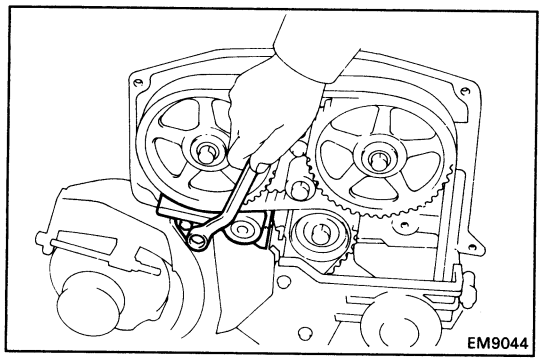

(b) Remove the timing belt from the camshaft timing pulleys.

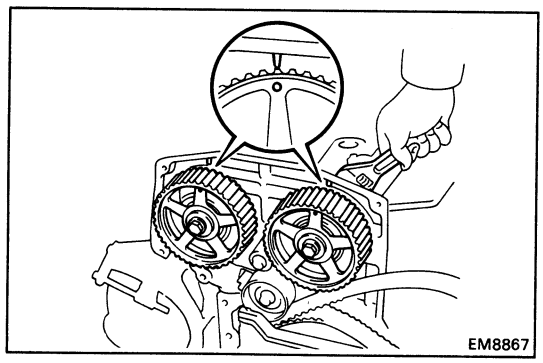

(c) Rotate the camshaft with a wrench and align the alignment marks of the camshaft timing pulley and No.3 timimg belt cover.

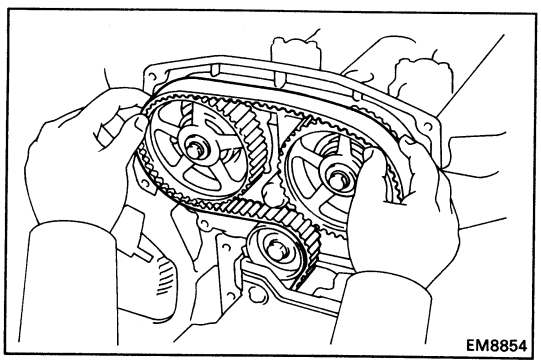

(d) Reinstall the timing belt, insure that there is tension between the crankshaft timing pulley and intake camshaft timing pulley.

NOTICE: Install the timing belt when the engine is cold.

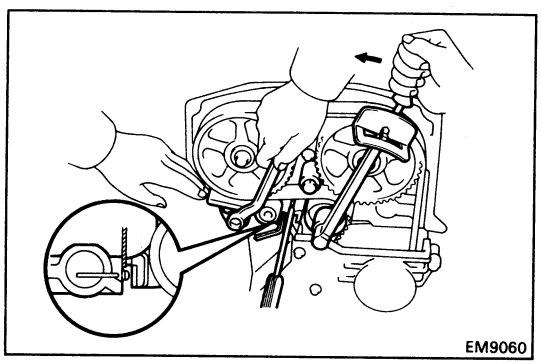

(e) Install the timing belt tensioner with the two bolts. (See steps 12 and 13 on pages EM-38 and 39)

Torque: 210 kg-cm (15 ft-lb, 21 N·m)

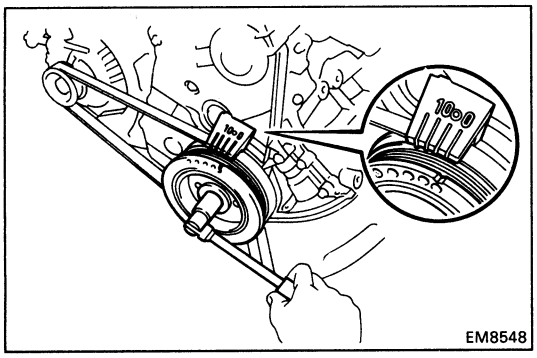

(f) Turn the crankshaft pulley two revolutions from TDC to TDC.

NOTICE: Always turn the crankshaft clockwise.

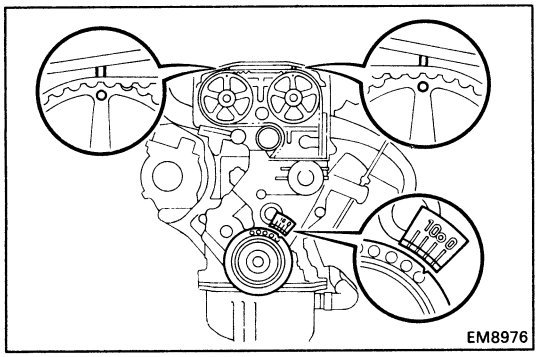

(g) Check that each pulley aligns with the timing marks as shown in the figure.

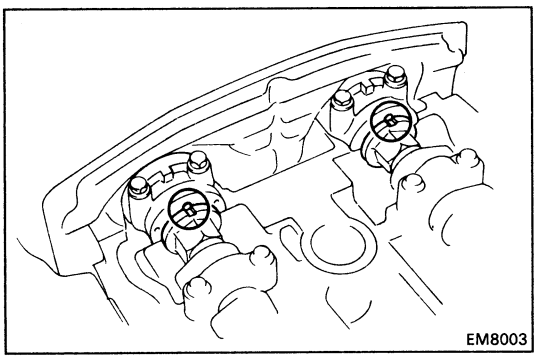

9. CHECK VALVE TIMING

(a) Using a wrench, turn and align the groove of the camshaft with the drilled mark of the No.1 camshaft bearing cap.

NOTICE: Always turn the crankshaft clockwise.

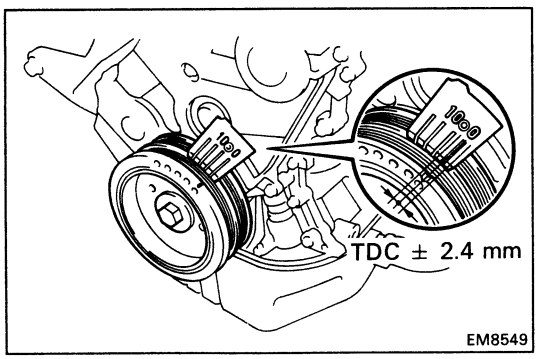

(b) Next make a note of the crankshaft pulley angle on the No.1 timing belt cover.

HINT: Perform this check separately for the intake and exhaust sides.

If the crankshaft pulley movement is within ± 2.4 mm (0.094 in.) of TDC, it is correct.

If it is greater than 2.4 mm (0.094 in.), go back to step 8.

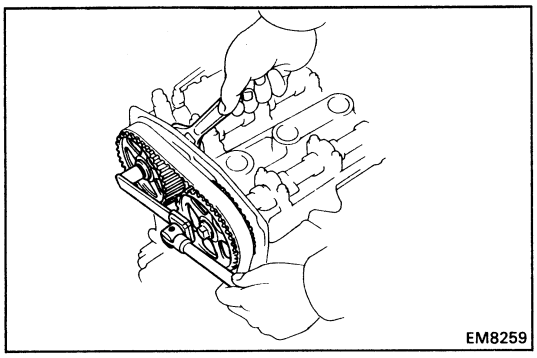

10. ADJUST VALVE TIMING

(a) Hold the hexagonal wrench head portion of the camshaft with a wrench, and remove the two camshaft timing pulley bolts.

HINT (Intake camshaft timing pulley): Use SST.

SST 09249-63010

NOTICE: Do not make use of the timing belt tension when loosening the pulley bolts.

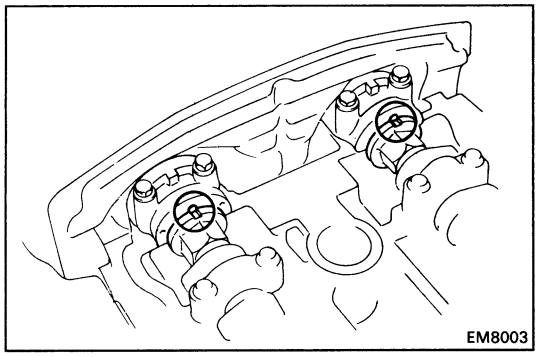
EM8003

(b) Check that the camshaft grooves are aligned with the drilled mark of the No.1 camshaft bearing cap.

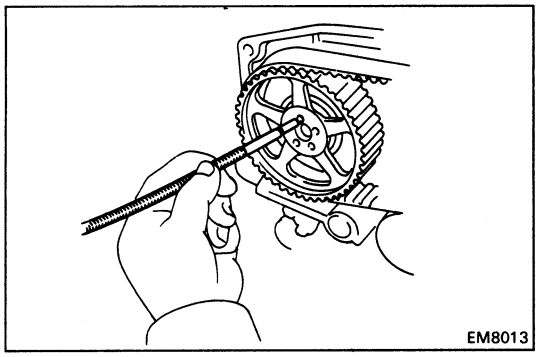
EM8013

(c) Using a magnetic finger, remove the knock pin from the pin hole of the camshaft timing pulley.

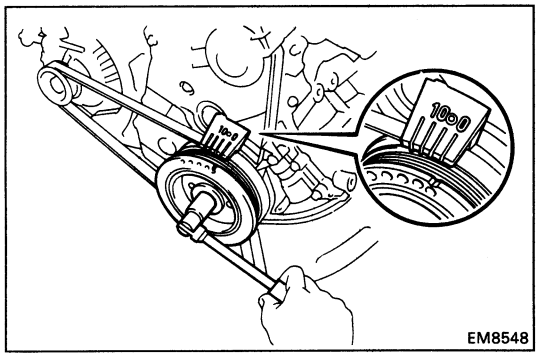
EM8548

(d) Turn the crankshaft pulley, and align its groove with timing mark "0" of the No.1 timing belt cover.

NOTICE: Always turn the crankshaft clockwise.

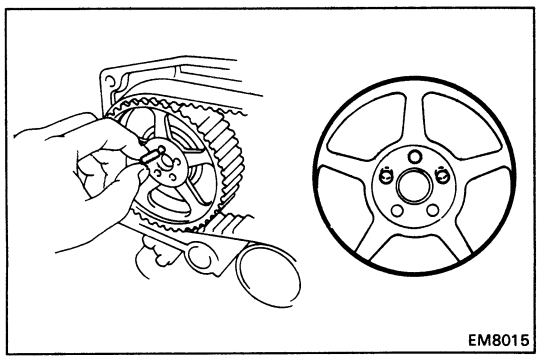
EM8015

(e) Select one overlapped hole of the camshaft and timing pulley, and insert the match pin into it.

HINT:

- If there is no overlapped hole, rotate the crankshaft a little and insert the pin into the nearly overlapped hole.
- By changing the pin hole to the next one, the crankshaft pulley angle can be adjusted by approx. 2°.
- By changing the pin hole to the next two, the crankshaft pulley angle can be adjusted by approx. 5°.

(f) Hold the hexagonal wrench head portion of the camshaft with a wrench, and install the pulley bolt.

Torque: 600 kg-cm (43 ft-lb, 59 N·m)
420 kg-cm (30 ft-lb, 41 N·m) for SST

HINT (Intake camshaft timing pulley):

- Use SST.

SST 09249-63010

- Use a torque wrench with a fulcrum length of 340 mm (13.39 in.).

NOTICE: Do not make use of the timing belt tension when tightening the bolt.

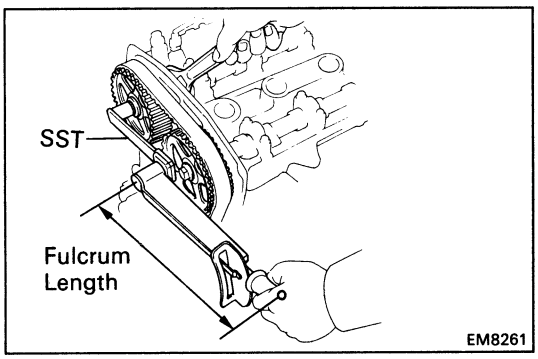

EM8261

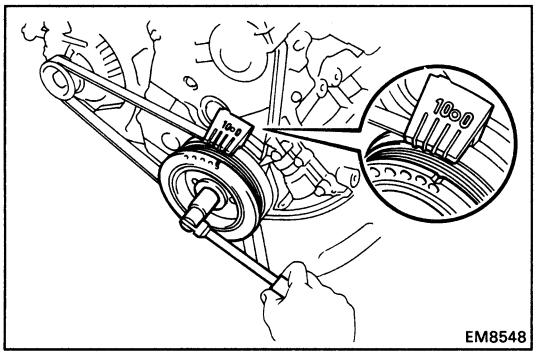

(g) Turn the crankshaft clockwise two revolutions from TDC to TDC.

(h) Recheck the valve timing.
(See step 9 on page EM-44)

11. REINSTALL CYLINDER HEAD COVER
(See step 7 on pages EM-88)

12. REINSTALL HOSE CLAMP AND VTV CLAMP OF AIR BY-PASS VALVE
(See steps 13 and 14 on page TC-19)

13. REINSTALL THROTTLE BODY
(See steps 2, 3 and 5 to 8 on pages FI-138 and 139)

14. REINSTALL EGR VACUUM MODULATOR AND VSV
(See step 20 on page EM-92)

15. REINSTALL SPARK PLUGS (See page IG-8)
Torque: 180 kg-cm (13 ft-lb, 18 N·m)

16. REINSTALL NO.2 TIMING BELT COVER
(See steps 15, 21 to 23 and 26 to 30 pages EM-40 and 41)

TIMING BELT (5S-FE)

COMPONENTS

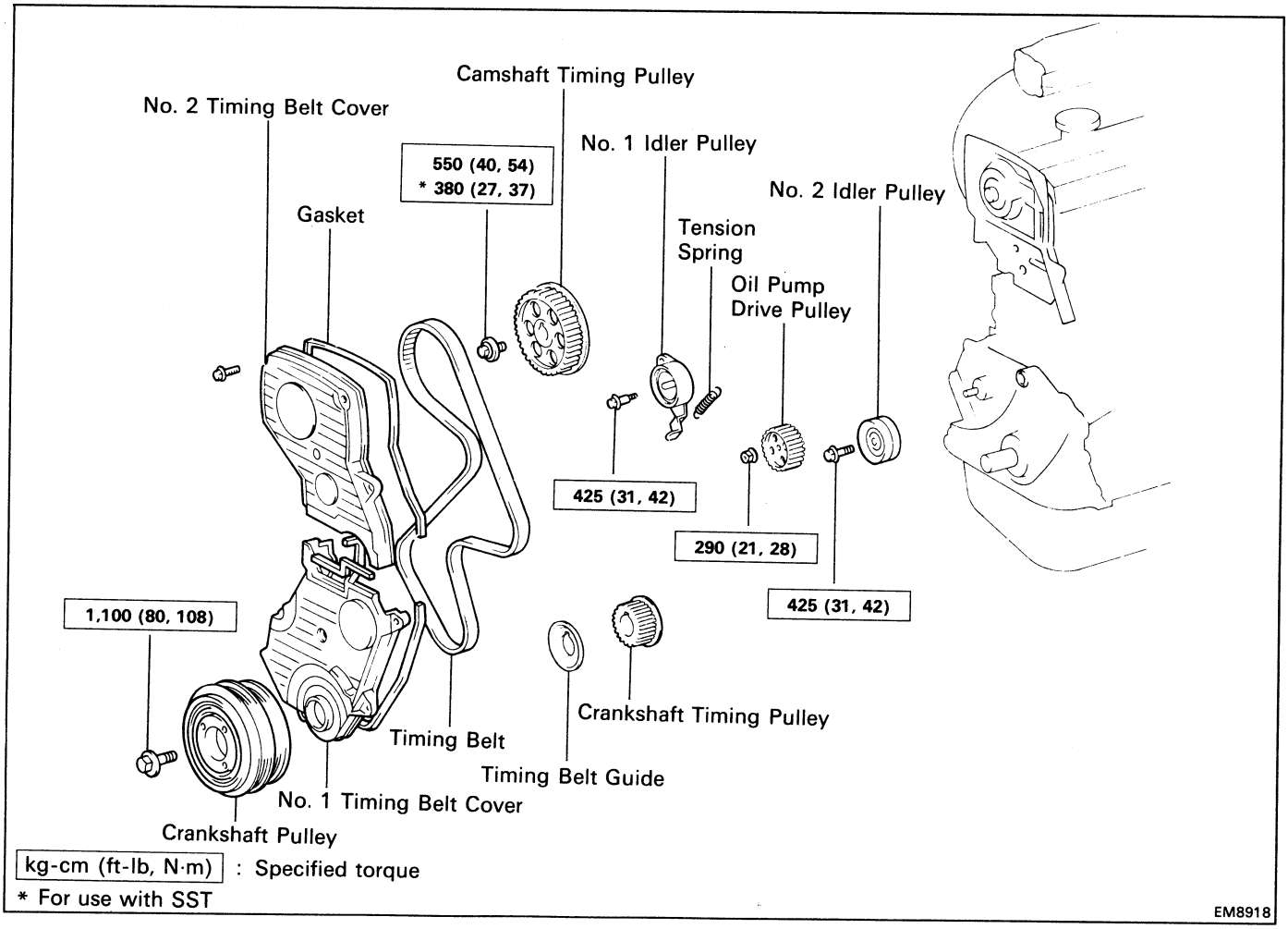

REMOVAL OF TIMING BELT

1. **DISCONNECT CABLE FROM NEGATIVE TERMINAL OF BATTERY**

   CAUTION: Work must be started after approx. 20 seconds or longer from the time the ignition switch is turned to the "LOCK" position and the negative (–) terminal cable is disconnected from the battery.

2. **REMOVE ENGINE UNDER COVERS**

3. **REMOVE RH ENGINE HOOD SIDE PANEL**

4. **REMOVE SUSPENSION UPPER BRACE**
   (See steps 8 on page EM-182)

5. **REMOVE CRUISE CONTROL ACTUATOR (w/ CRUISE CONTROL SYSTEM) AND ACCELERATOR LINKAGE**
   (See step 11 on page EM-182)

6. **REMOVE RH FRONT WHEEL**

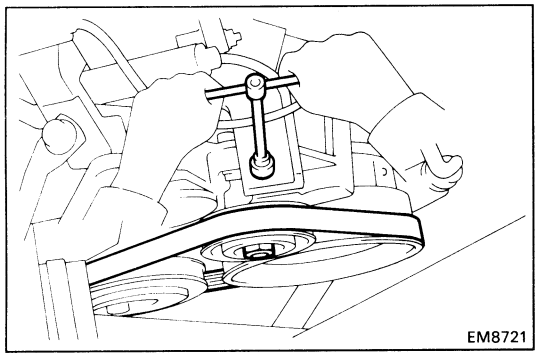

7. REMOVE A/C DRIVE BELT

Loosen the idler pulley bolt and adjusting bolt, and remove the drive belt.

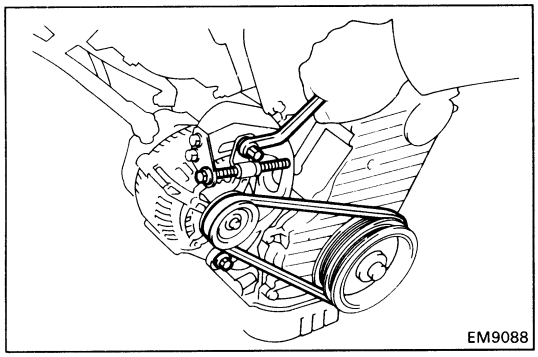

8. REMOVE ALTERNATOR DRIVE BELT

Loosen the pivot bolt, adjusting lock bolt and adjusting bolt, and remove the drive belt.

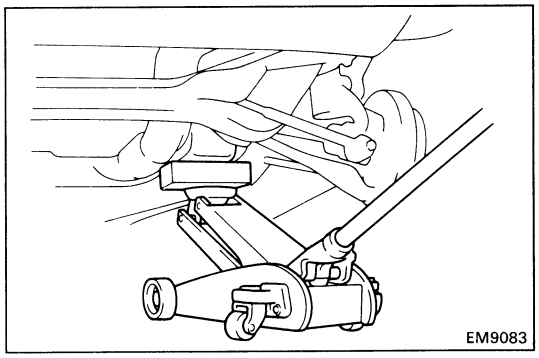

9. SLIGHTLY JACK UP ENGINE

Raise the engine enough to remove the weight from the engine mounting on the right side.

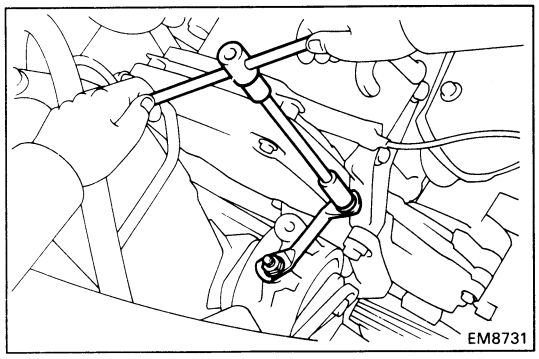

10. REMOVE RH ENGINE MOUNTING STAY

Remove the bolt, nut and mounting stay.

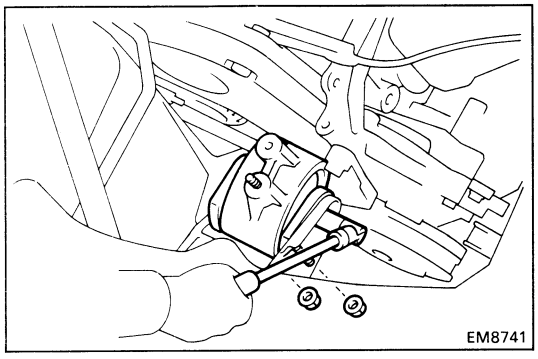

11. REMOVE RH ENGINE MOUNTING INSULATOR

Remove the through bolt, two nuts and mounting insulator.

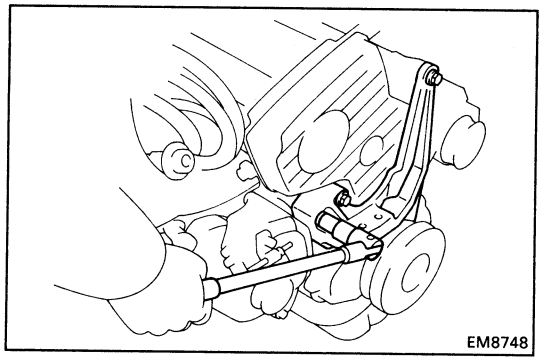

12. REMOVE RH ENGINE MOUNTING BRACKET

Remove the three bolts and mounting bracket.

HINT: Lower the jack and perform the operation with the engine fully up.

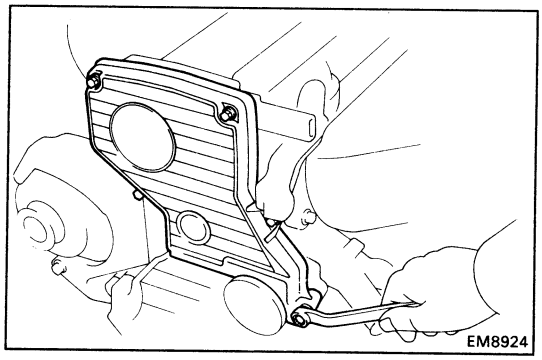

13. REMOVE NO.2 TIMING BELT COVER

Remove the five bolts, timing belt cover and two gaskets.

14. REMOVE SPARK PLUGS (See page IG-11)

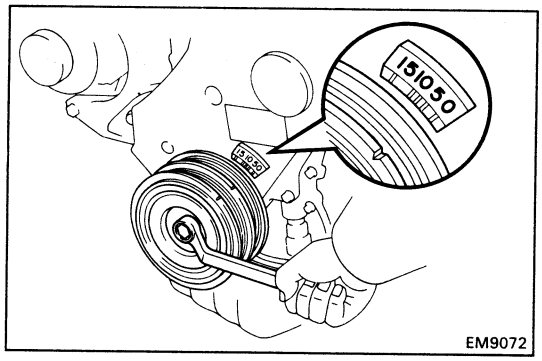

15. SET NO.1 CYLINDER TO TDC/COMPRESSION

(a) Turn the crankshaft pulley and align its groove with timing mark "0" of the No.1 timing belt cover.

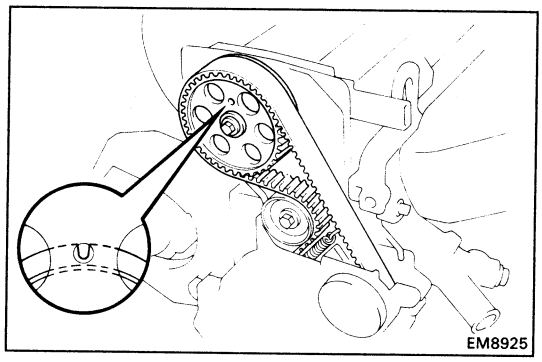

(b) Check that the hole of the camshaft timing pulley is aligned with the timing mark of the bearing cap.

If not, turn the crankshaft one revolution (360°).

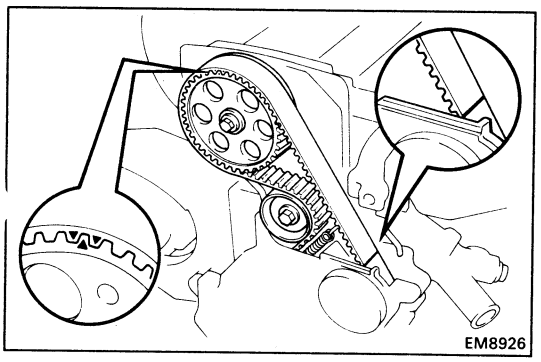

16. REMOVE TIMING BELT FROM CAMSHAFT TIMING PULLEY

HINT (When re-using timing belt): Place the match-marks on the timing belt and camshaft timing pulley, and place matchmark on the timing belt to match the end of the No.1 timing belt cover.

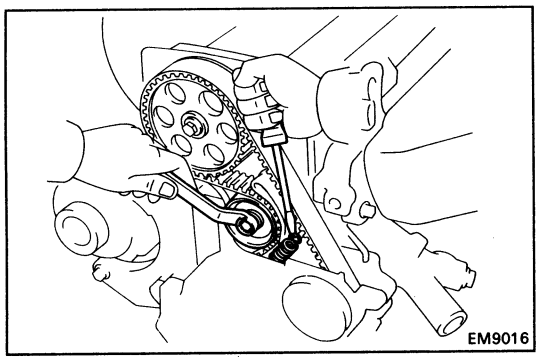

(a) Loosen the mount bolt of the No.1 idler pulley and shift the pulley toward the left as far as it will go, temporarily tighten it.

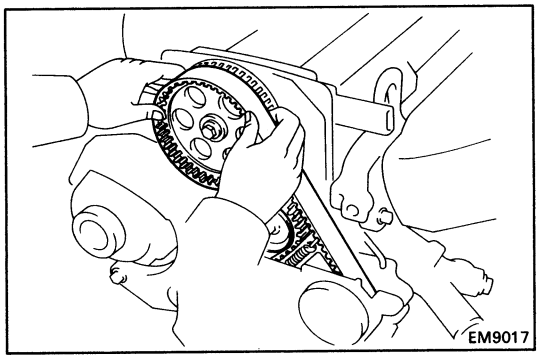

(b) Remove the timing belt from the camshaft timing pulley.

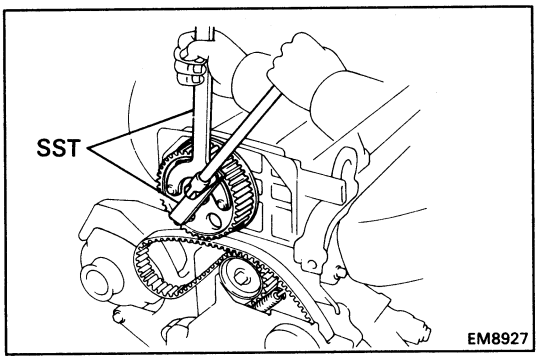

17. REMOVE CAMSHAFT TIMING PULLEY

Using SST, remove the bolt, plate washer and timing pulley.

SST 09249-63010 and 09278-54012

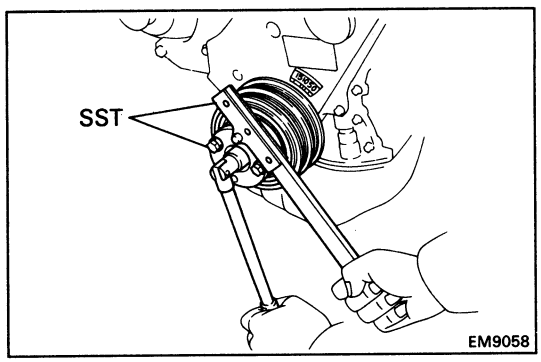

18. REMOVE CRANKSHAFT PULLEY

(a) Using SST, remove the pulley bolt.

SST 09213-54015 (09214-00030) and 09330-00021

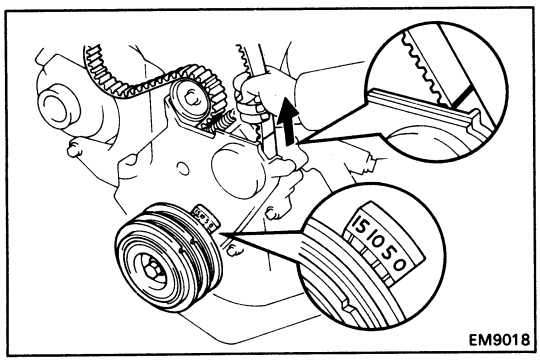

HINT (When re-using timing belt): After loosening the crankshaft pulley bolt, check that the timing belt matchmark aligns with the end of the No.1 timing belt cover when the crankshaft pulley groove is aligned with the timing mark "0" of the No.1 timing belt cover. If the matchmark does not align, align as follows:

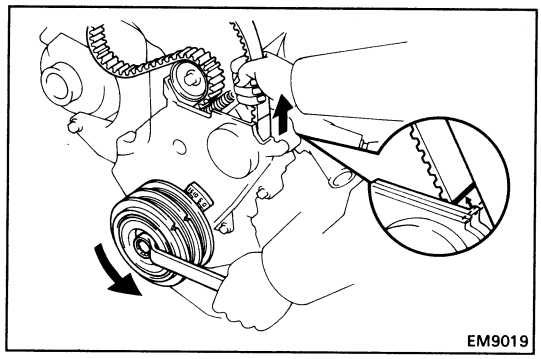

(When matchmark is out of alignment clockwise)

- Align the matchmark by pulling the timing belt up on the water pump pulley side while turning the crankshaft pulley counterclockwise.

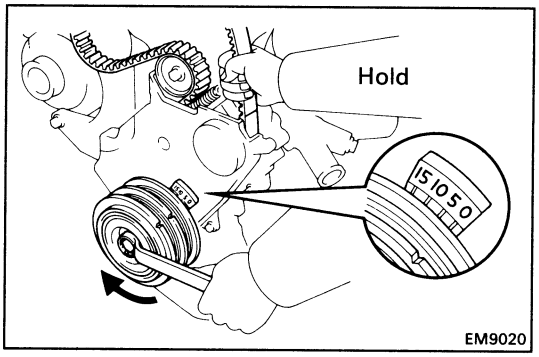

- After aligning the matchmark, hold the timing belt. And turn the crankshaft pulley clockwise, and align its groove with timing mark "0" of the No.1 timing belt cover.

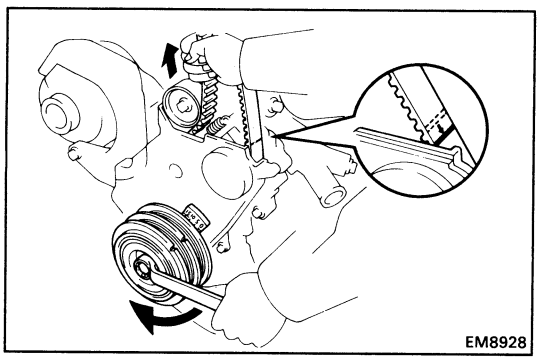

(When matchmark is out of alignment counter-clockwise)

- Align the matchmark by pulling the timing belt up on the No.1 idler pulley side while turning the crankshaft pulley clockwise.

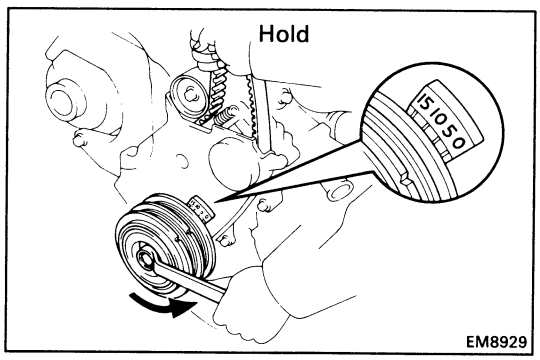

- After aligning the matchmark, hold the timing belt. And turn the crankshaft pulley counterclockwise, and align its groove with timing mark "0" of the No.1 timing belt cover.

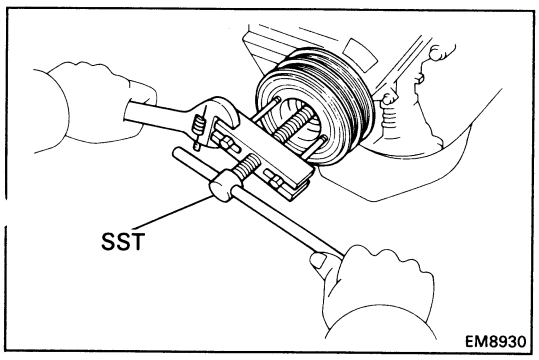

(b) Using SST, remove the pulley.

SST 09213-60017 (09213-00020, 09213-00030, 09213-00050)

HINT (When re-using timing belt): Remove the pulley without turning it.

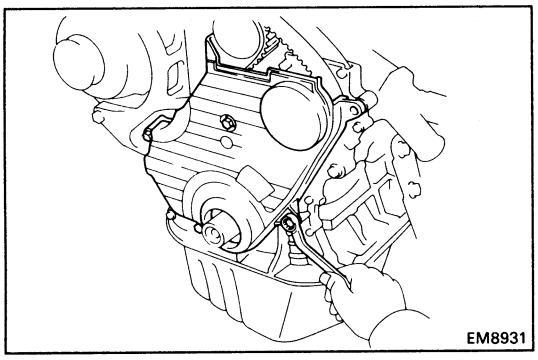

19. REMOVE NO.1 TIMING BELT COVER

Remove the four bolts, timing belt cover and gasket.

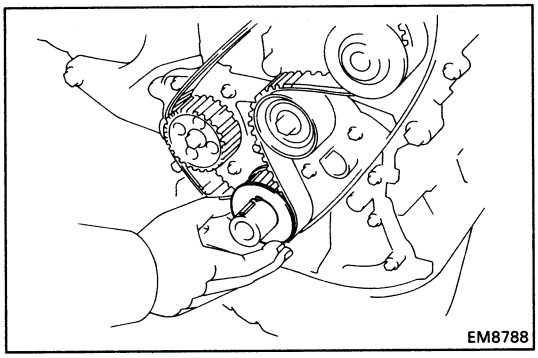

20. REMOVE TIMING BELT GUIDE

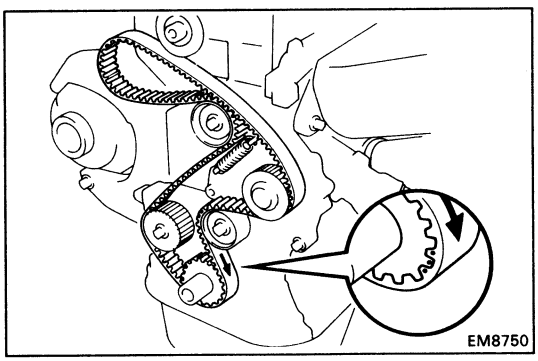

21. REMOVE TIMING BELT

HINT (When re-using timing belt): Draw a direction arrow on the timing belt (in direction of engine revolution), and place the matchmarks on the timing belt and crankshaft timing pulley.

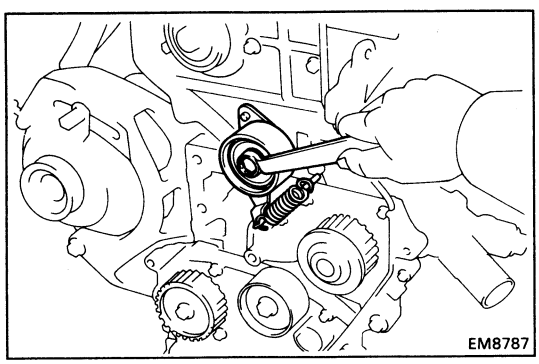

22. REMOVE NO.1 IDLER PULLEY AND TENSION SPRING

Remove the bolt, pulley and tension spring.

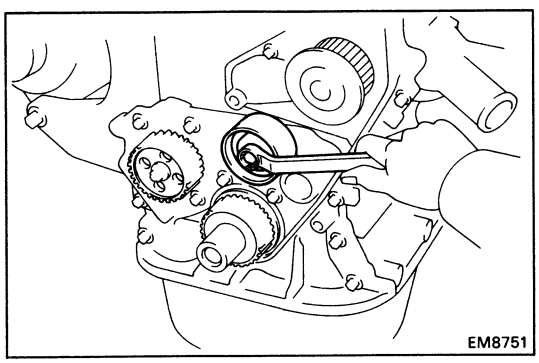

23. REMOVE NO.2 IDLER PULLEY

Remove the bolt and pulley.

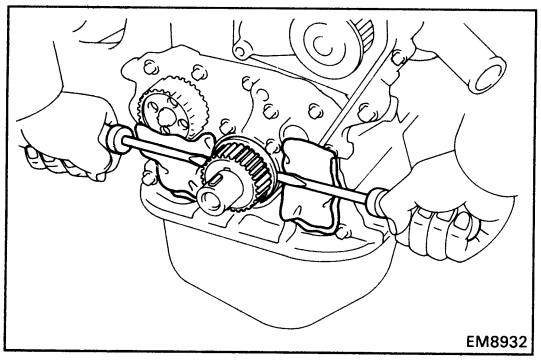

24. REMOVE CRANKSHAFT TIMING PULLEY

If the pulley cannot be removed by hand, use two screwdrivers.

HINT: Position shop rags as shown to prevent damage.

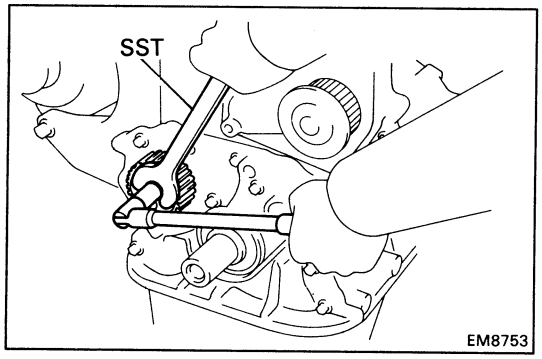

25. REMOVE OIL PUMP PULLEY

Using SST, remove the nut and pulley.

SST 09616-30011

INSPECTION OF TIMING BELT COMPONENTS

1. INSPECT TIMING BELT

NOTICE:

- **Do not bend, twist or turn the timing belt inside out.**
- **Do not allow the timing belt to come into contact with oil, water or steam.**
- **Do not utilize timing belt tension when installing or removing the mount bolt of the camshaft timing pulley.**

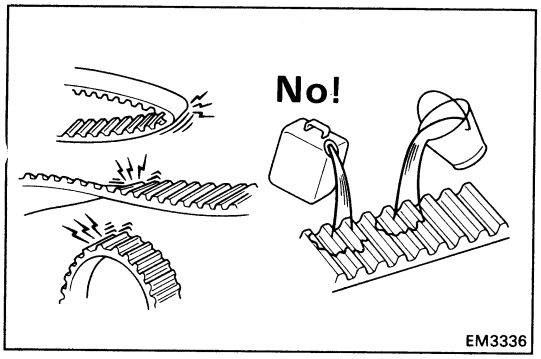

If there are any defects as shown in the illustrations, check the following points:

(a) Premature parting

- Check for proper installation.
- Check the timing cover gasket for damage and proper installation.

(b) If the belt teeth are cracked or damaged, check to see if either camshaft or water pump is locked.

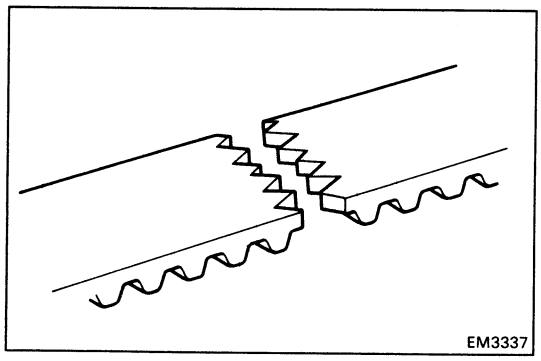

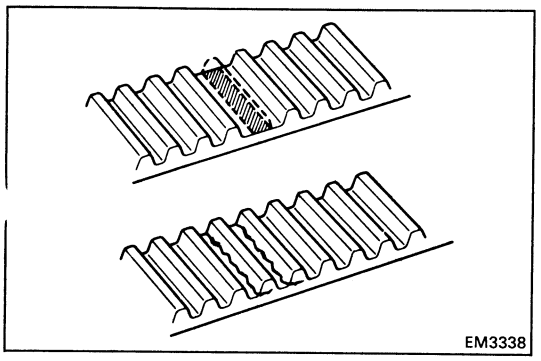

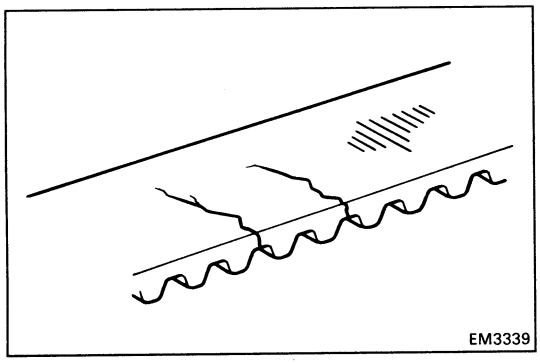

(c) If there is noticeable wear or cracks on the belt face, check to see if there are nicks on the side of the idler pulley lock.

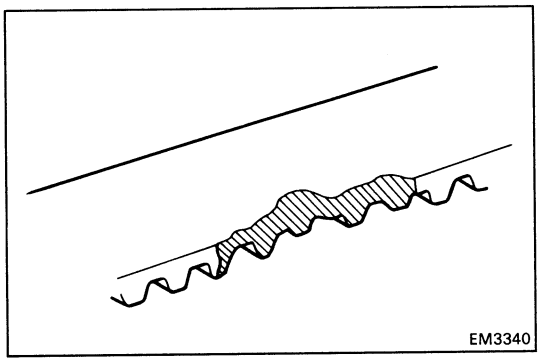

(d) If there is wear or damage on only one side of the belt, check the belt guide and the alignment of each pulley.

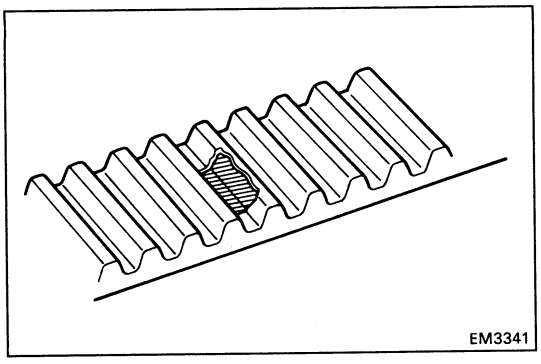

(e) If there is noticeable wear on the belt teeth, check the timing cover for damage, and correct gasket installation and the foreign material on the pulley teeth.

If necessary, replace the timing belt.

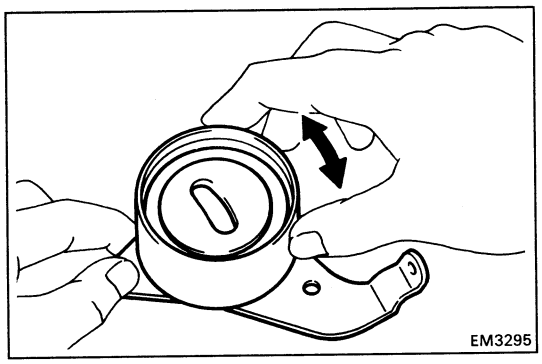

2. INSPECT IDLER PULLEYS

Check the turning smoothness of the idler pulley.

If necessary, replace the idler pulley.

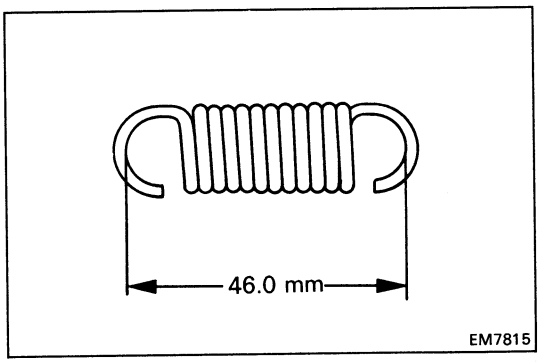

3. INSPECT TENSION SPRING

(a) Measure the free length of the tension spring.

Free length: 46.0 mm (1.811 in.)

If the free length is not as specified, replace the tension spring.

(b) Measure the tension of the tension spring at the specified installed length.

Installed tension:
4.75 – 5.25 kg (10.5 – 11.6 lb, 47 – 52 N·m)
at 50.5 mm (1.988 in.)

If the installed tension is not as specified, replace the tension spring.

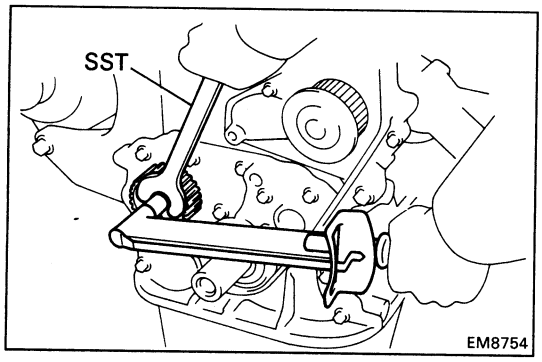

INSTALLATION OF TIMING BELT

(See page EM-47)

1. INSTALL OIL PUMP PULLEY

(a) Align the cutouts of the pulley and shaft, and slide on the pulley.

(b) Using SST, install the nut.

SST 09616-30011

Torque: 290 kg-cm (21 ft-lb, 28 N·m)

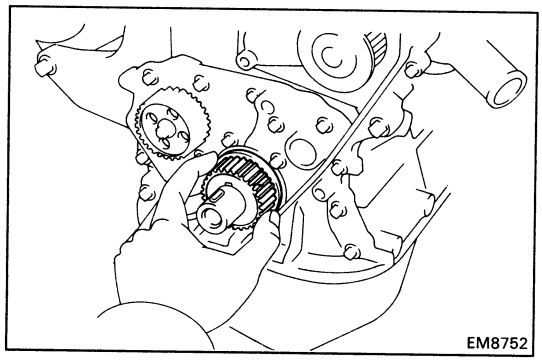

2. INSTALL CRANKSHAFT TIMING PULLEY

(a) Align the timing pulley set key with the key groove of the pulley.

(b) Slide on the timing pulley, facing the flange side inward.

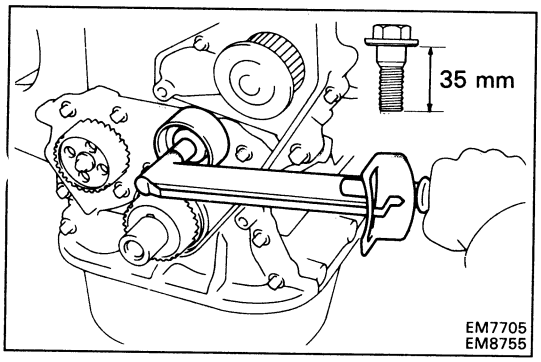

3. INSTALL NO.2 IDLER PULLEY

(a) Install the pulley with the bolt.

Torque: 425 kg-cm (31 ft-lb, 42 N·m)

HINT: Use bolt 35 mm (1.38 in.) in length.

(b) Check that the idler pulley moves smoothly.

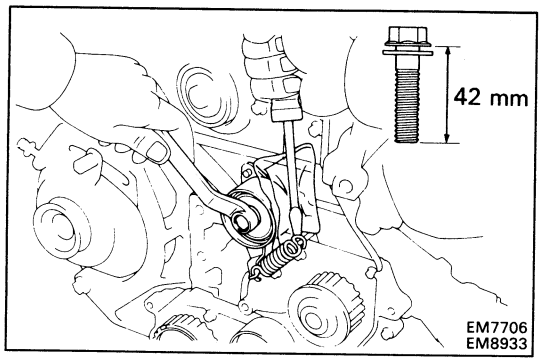

4. TEMPORARILY INSTALL NO.1 IDLER PULLEY AND TENSION SPRING

(a) Install the pulley with the bolt. Do not tighten the bolt yet.

HINT: Use bolt 42 mm (1.65 in.) in length.

(b) Install the tension spring.

(c) Pry the pulley toward the left as far as it will go and tighten the bolt.

(d) Check that the idler pulley moves smoothly.

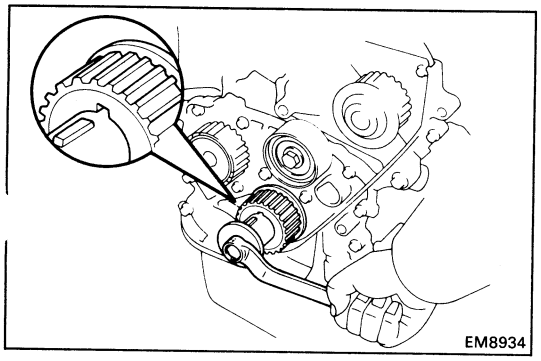

5. TEMPORARILY INSTALL TIMING BELT

NOTICE: The engine should be cold.

(a) Using the crankshaft pulley bolt, turn the crankshaft and position the key groove of the crankshaft timing pulley upward.

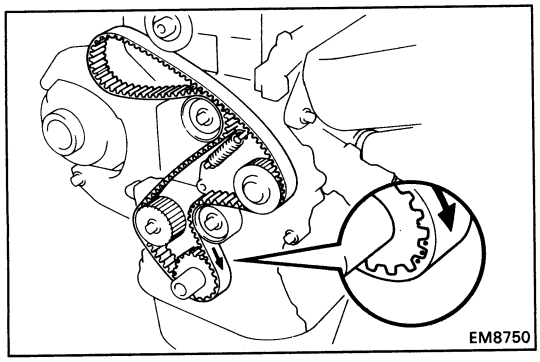

(b) Remove any oil or water on the crankshaft pulley, oil pump pulley, water pump pulley, No.1 idler pulley, No.2 idler pulley, and keep them clean.

(c) Install the timing belt on the crankshaft timing, oil pump pulley, No.2 idler pulley, water pump pulley and No.2 idler pulley.

HINT (When re-using timing belt): Align the match-marks of the camshaft timing pulley and timing belt, and install the belt with the arrow pointing in the direction of engine revolution.

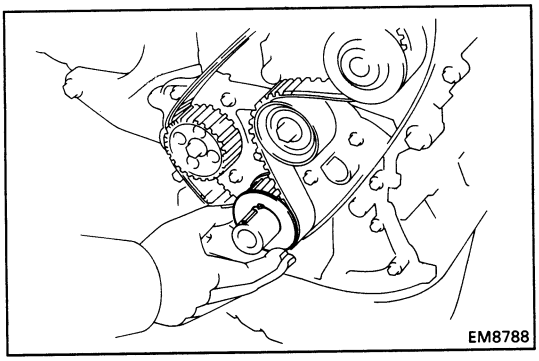

6. INSTALL TIMING BELT GUIDE

Install the guide, facing the cup side outward.

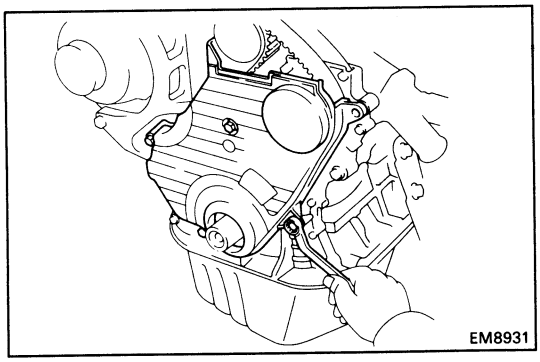

7. INSTALL NO.1 TIMING BELT COVER

(a) Install the gasket to the timing belt cover.

(b) Install the timing belt cover with the four bolts.

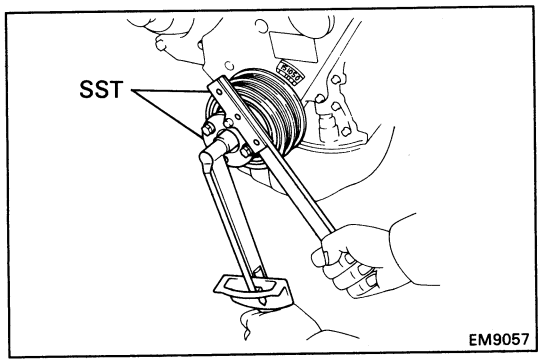

8. INSTALL CRANKSHAFT PULLEY

(a) Align the pulley set key with the key groove of the pulley, slide on the pulley.

(b) Using SST, install the pulley bolt.

SST 09213-54015 (09214-00030) and 09330-00021

Torque: 1,100 kg-cm (80 ft-lb, 108 N·m)

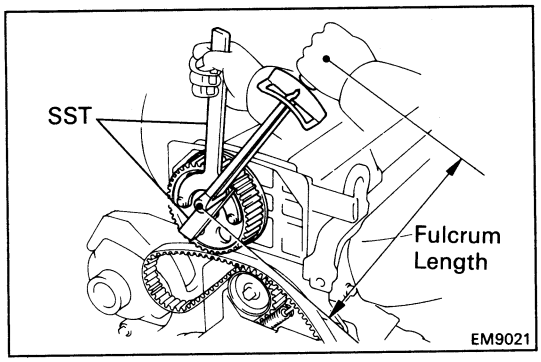

9. INSTALL CAMSHAFT TIMING PULLEY

(a) Align the camshaft knock pin with the knock pin groove of the pulley, and slide on the timing pulley.

(b) Using SST, install the plate washer and bolt.

SST 09249-63010 and 09278-54012

Torque: 380 kg-cm (27 ft-lb, 37 N·m)

HINT: Use a torque wrench with a fulcrum length of 340 mm (13.39 in.).

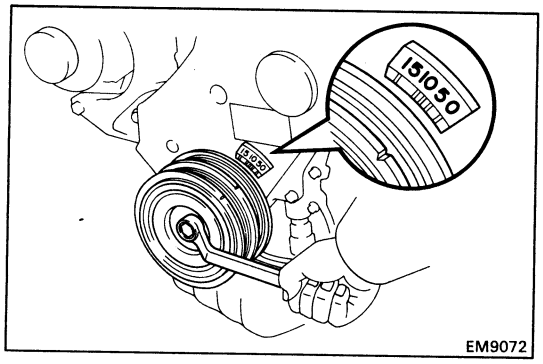

10. SET NO.1 CYLINDER TO TDC/COMPRESSION

(a) Turn the crankshaft pulley, and align its groove with timing mark "0" of the No.1 timing belt cover.

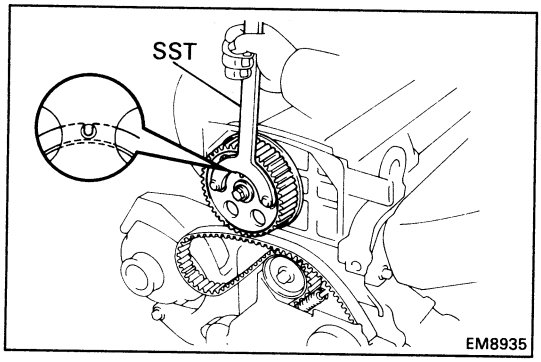

(b) Using SST, turn the camshaft, and align the hole of the camshaft timing pulley with the timing mark of the bearing cap.

SST 09278-54012

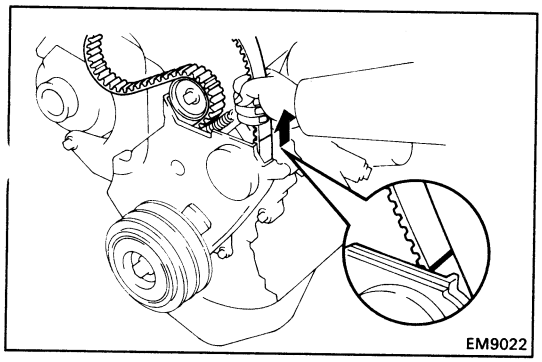

11. INSTALL TIMING BELT

HINT (When re-using timing belt):

- Check that the matchmark on the timing belt matches the end of the No.1 timing belt cover.

If the matchmark does not align, shift the meshing of the timing belt and crankshaft timing pulley until they align. (See page EM-51)

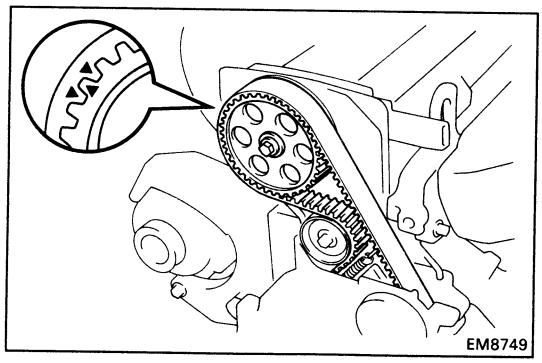

- Align the matchmarks of the timing belt and camshaft timing pulley.

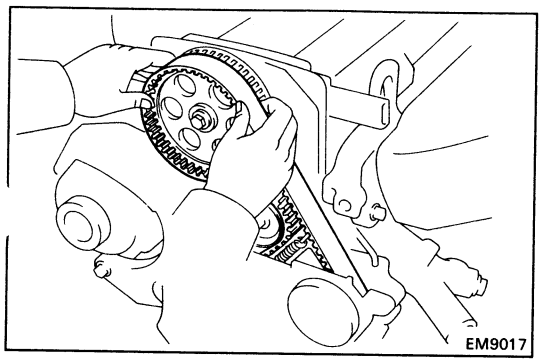

(a) Remove any oil or water on the camshaft timing pulley, and keep it clean.

(b) Install the timing belt, insure that there is tension between the crankshaft timing pulley and camshaft timing pulley.

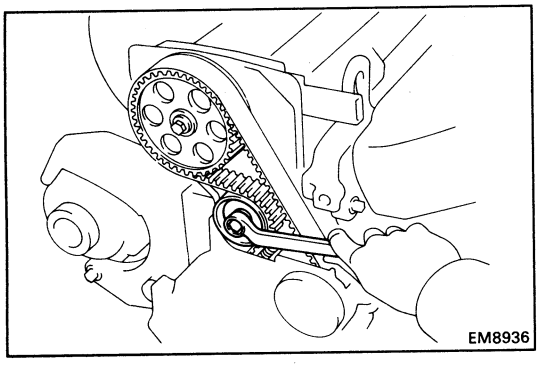
EM8936

12. CHECK VALVE TIMING

(a) Loosen the No.1 idler pulley bolt 1/2 turn.

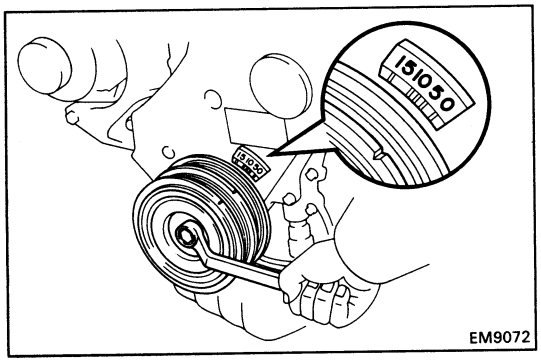

EM9072

(b) Turn the crankshaft pulley two revolutions from TDC to TDC.

NOTICE: Always turn the crankshaft clockwise.

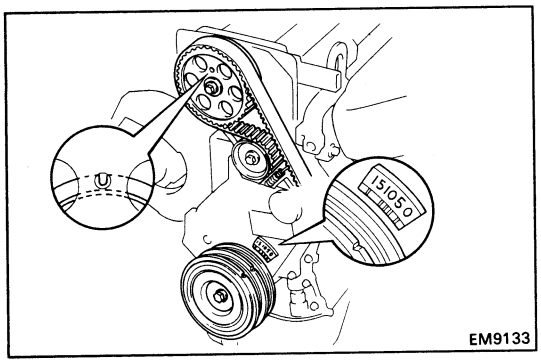

EM9133

(c) Check that each pulley aligns with the timing marks as shown in the figure.

If the timing marks do not align, remove the timing belt and reinstall it.

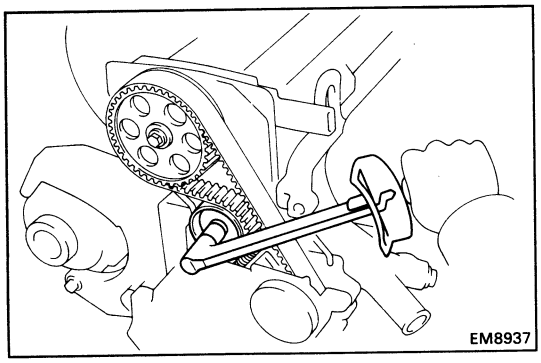
EM8937

(d) Torque the mount bolt of the No.1 idler pulley.

Torque: 425 kg-cm (31 ft-lb, 42 N·m)

13. INSTALL SPARK PLUGS (See page IG-12)

Torque: 180 kg-cm (13 ft-lb, 18 N·m)

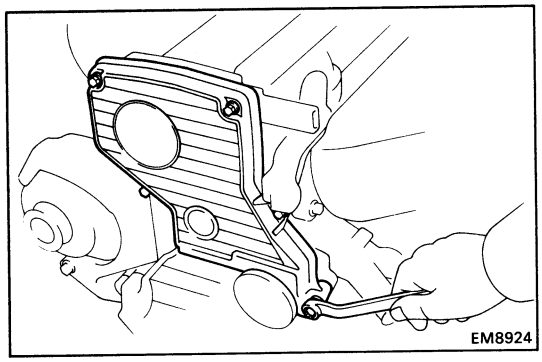
EM8924

14. INSTALL NO.2 TIMING BELT COVER

(a) Install the two gaskets to the No.1 and No.2 belt covers.

(b) Install the belt cover with the five bolts.

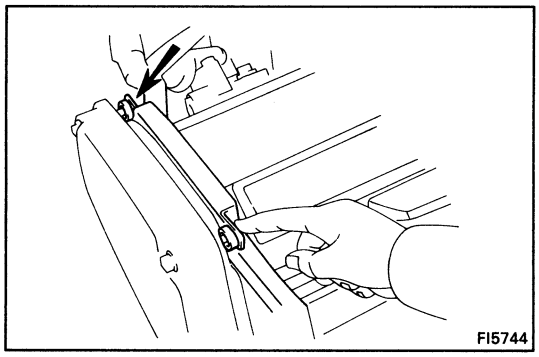

(c) Install the two clamps of the engine wire to each bolt.

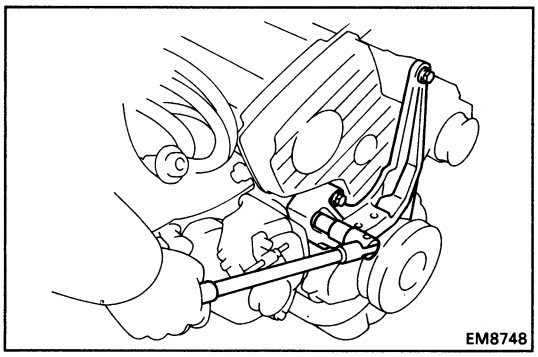

15. INSTALL RH ENGINE MOUNTING BRACKET

Install the bracket with the three bolts.

Torque: 530 kg-cm (38 ft-lb, 52 N·m)

HINT: Lower the jack and perform the operation with the engine fully up.

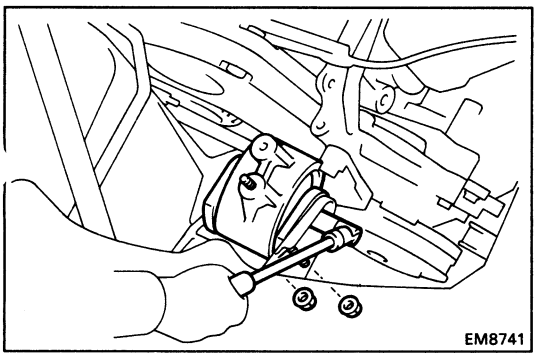

16. INSTALL RH ENGINE MOUNTING INSULATOR

Install the mounting insulator with the through bolt and two nuts.

Torque:

Nut	**530 kg-cm (38 ft-lb, 52 N·m)**
Through bolt	**800 kg-cm (58 ft-lb, 78 N·m)**

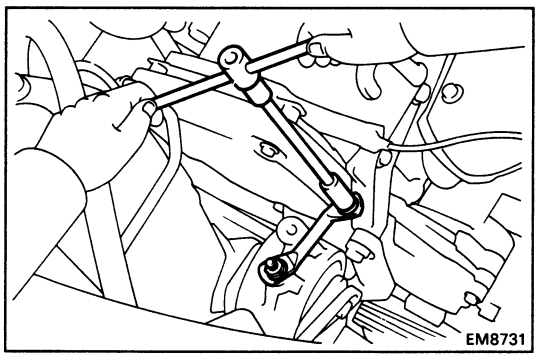

17. INSTALL RH ENGINE MOUNTING STAY

Install the mounting stay with the bolt and nut.

Torque: 740 kg-cm (54 ft-lb, 73 N·m)

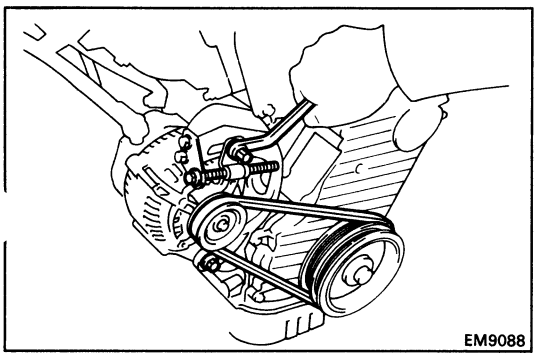

18. INSTALL ALTERNATOR DRIVE BELT

Install the drive belt with the adjusting bolt, lock bolt and pivot bolt.

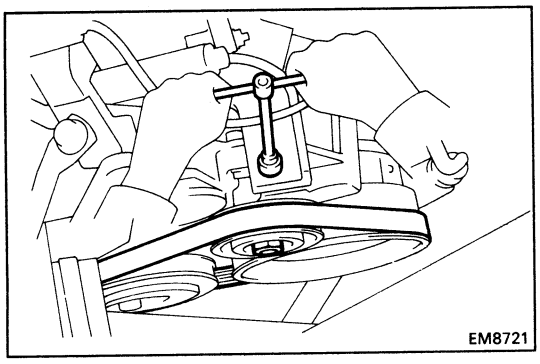

19. INSTALL A/C DRIVE BELT

Install the drive belt with the adjusting bolt and idler pulley bolt.

20. INSTALL RH FRONT WHEEL

21. INSTALL CRUISE CONTROL ACTUATOR (w/ CRUISE CONTROL SYSTEM) AND ACCELERATOR LINKAGE
(See step 33 pages EM-225)

22. CONNECT CABLE TO NEGATIVE TERMINAL OF BATTERY

23. CHECK AND ADJUST DRIVE BELTS

(a) Adjust the alternator drive belt.
(See page CH-3)

Drive belt tension: New belt 120 ± 20 lb
Used belt 104 ± 20 lb

(b) Adjust the A/C drive belt.

Drive belt tension: New belt 160 ± 20 lb
Used belt 100 ± 20 lb

24. INSTALL SUSPENSION UPPER BRACE
(See step 36 on page EM-226)

25. INSTALL RH ENGINE HOOD SIDE PANEL

26. INSTALL ENGINE UNDER COVERS

CYLINDER HEAD (3S-GTE)

COMPONENTS

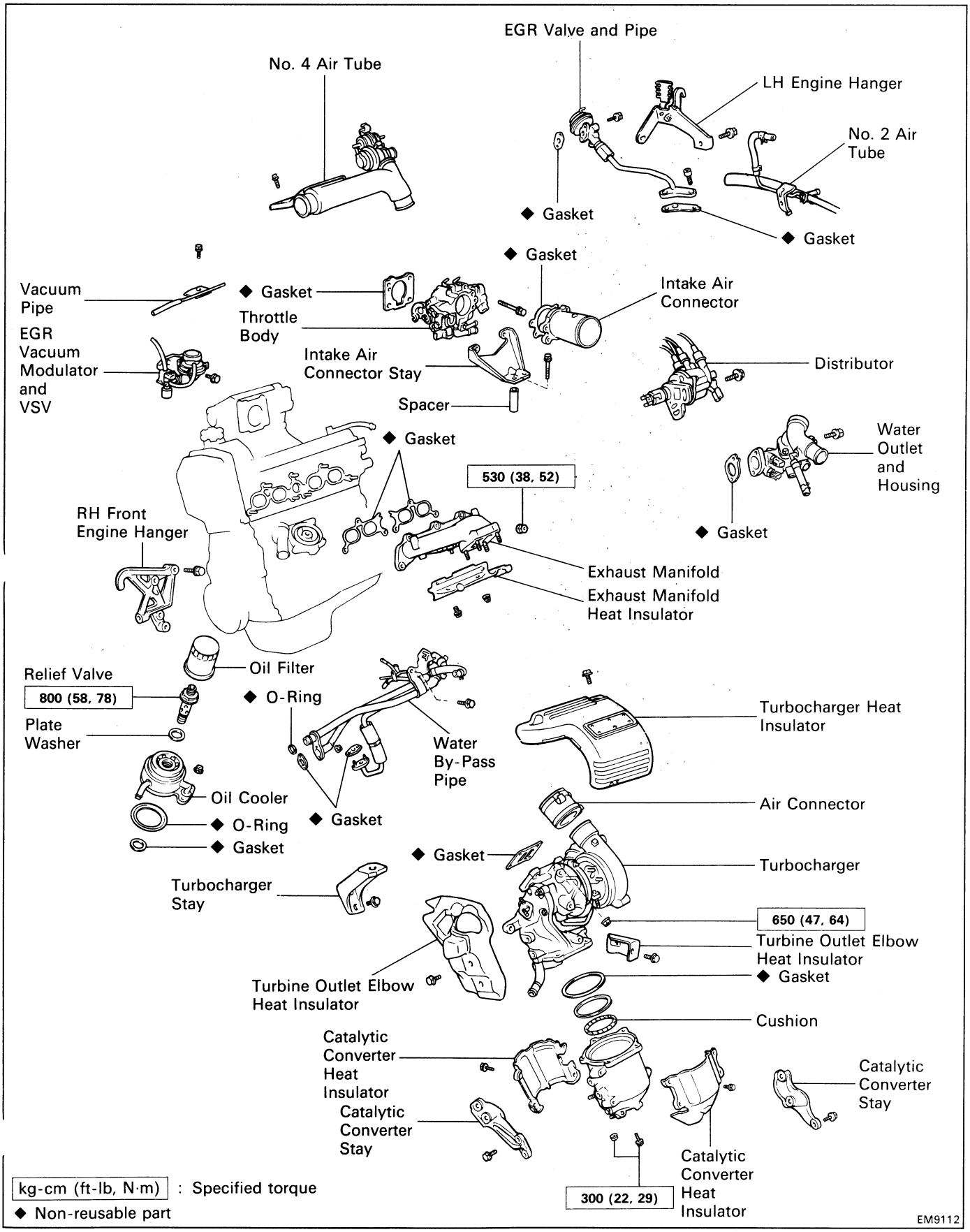

COMPONENTS (Cont'd)

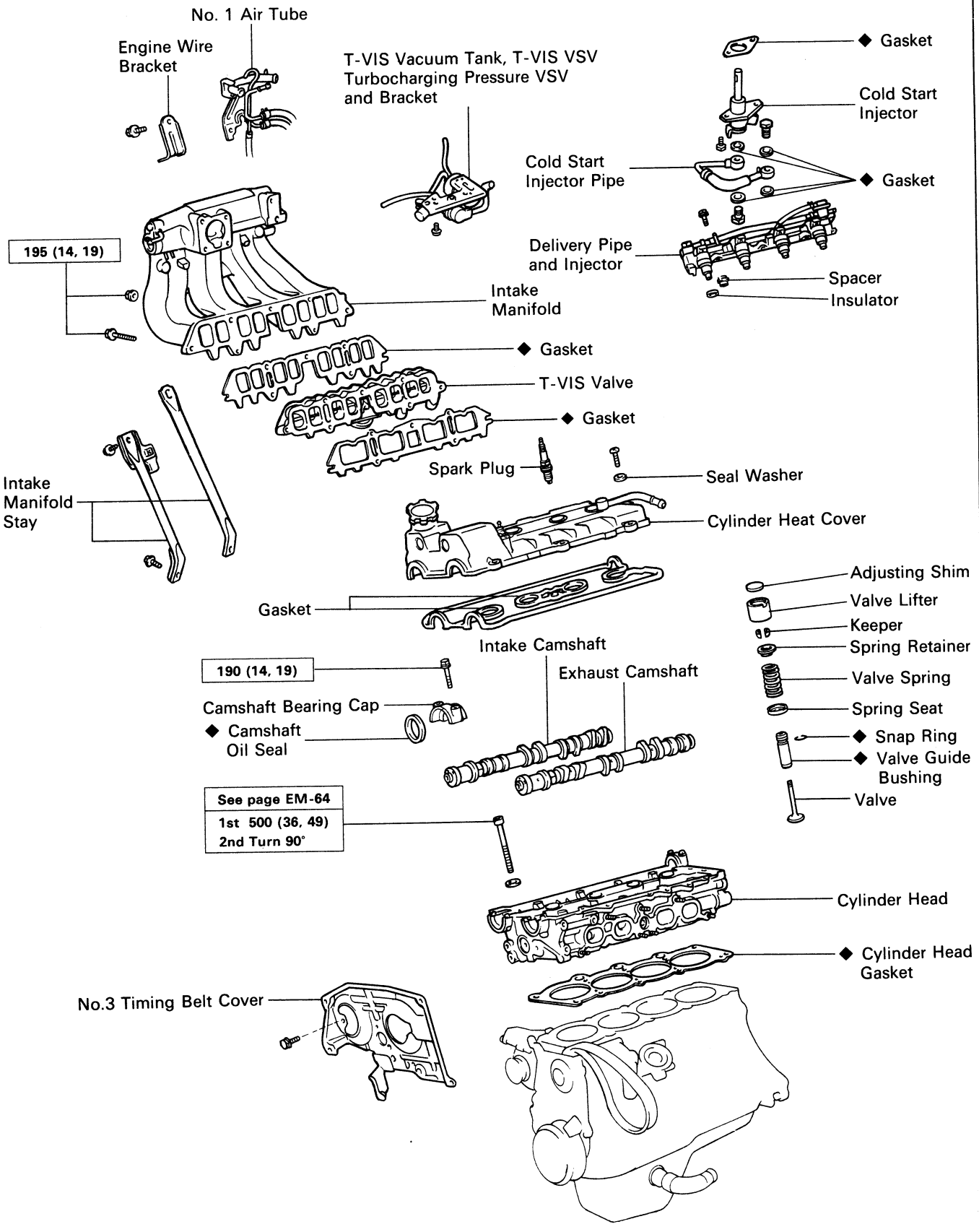

kg-cm (ft-lb, N·m) : Spedified torque

◆ Non-reusable part

EM9113

REMOVAL OF CYLINDER HEAD

(See pages EM-61 and 62)

1. DISCONNECT CABLE FROM NEGATIVE TERMINAL OF BATTERY

   CAUTION: Work must be started after approx. 20 seconds or longer from the time the ignition switch is turned to the "LOCK" position and the negative (–) terminal cable is disconnected from the battery.

2. DRAIN ENGINE COOLANT (See page CO-6)

3. REMOVE ENGINE UNDER COVERS

4. REMOVE ENGINE HOOD SIDE PANELS

5. REMOVE SUSPENSION UPPER BRACE (See step 8 on page EM-134)

6. DISCONNECT ACCELERATOR CABLE FROM THROTTLE BODY

7. REMOVE CRUISE CONTROL ACTUATOR (w/ CRUISE CONTROL SYSTEM) AND ACCELERATOR LINKAGE (See step 13 on page EM-135)

8. REMOVE AIR CLEANER CAP (See step 9 on page EM-134)

9. DISCONNECT GROUND STRAP CONNECTOR

10. DISCONNECT HOSES

    (a) Brake booster vacuum hose from intake manifold

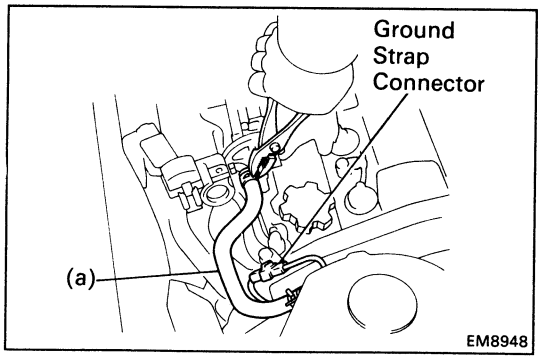

    (b) Turbocharging pressure sensor hose from intake manifold

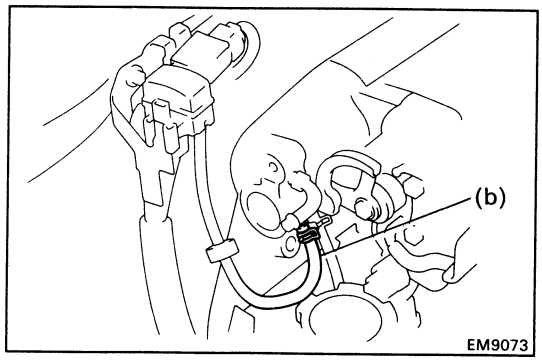

    (c) A/C VSV vacuum hose from intake manifold

    (d) A/C VSV air hose from No.2 air tube

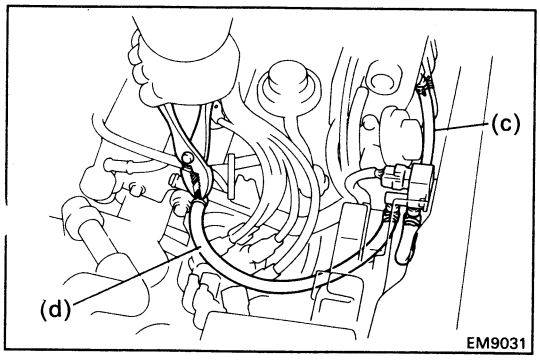

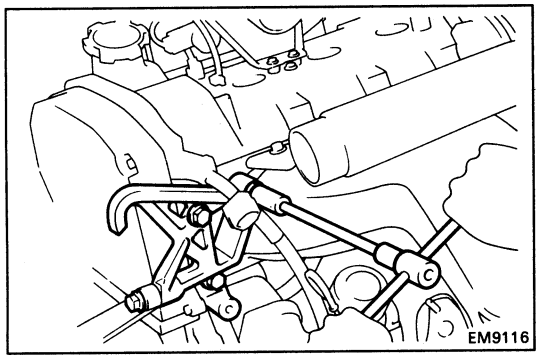

11. REMOVE RH FRONT ENGINE HANGER

Remove the three bolts and engine hanger.

12. REMOVE INTERCOOLER

(See steps 4, 5, 7, 8 and 10 to 13 on pages TC-20 to 22)

13. REMOVE FRONT EXHAUST PIPE

(See step 30 and 31 on pages EM-138 and 139)

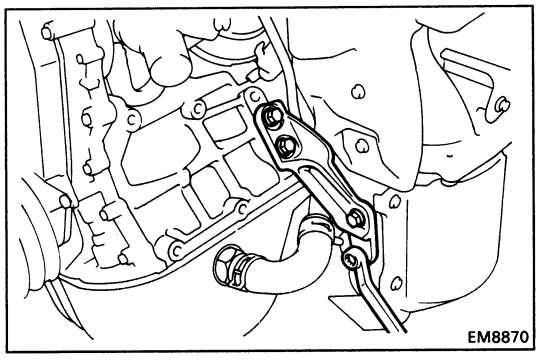

14. REMOVE CATALYTIC CONVERTER

(a) Remove the four bolts and RH converter stay.

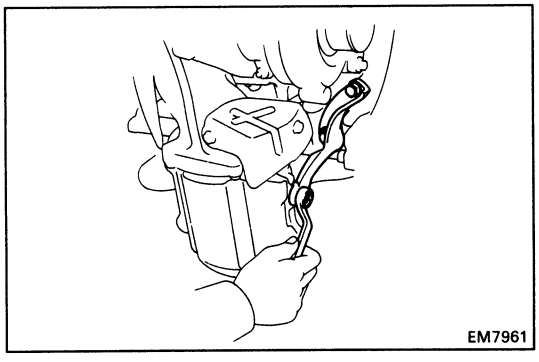

(b) Remove the three bolts and LH converter stay.

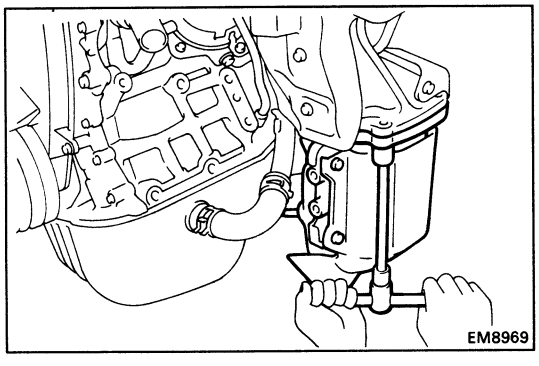

(c) Remove the three bolts, two nuts and catalytic converter. Remove the gasket, retainer and cushion.

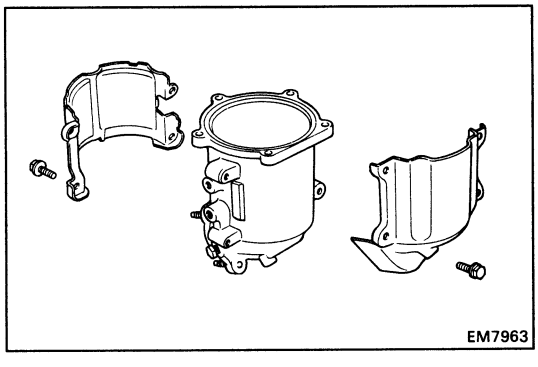

(d) Remove the five bolts and front heat insulator.

(e) Remove the four bolts and rear heat insulator.

15. **REMOVE TURBOCHARGER**
(See steps 8, 11, 12 and 18 to 24 on pages TC-9 and 12)

16. **REMOVE THROTTLE BODY**
(See steps 5 to 8, 10 and 11 on pages FI-135 and 136)

17. **REMOVE COLD START INJECTOR**
(See steps 2 to 4 on pages FI-99 and 100)

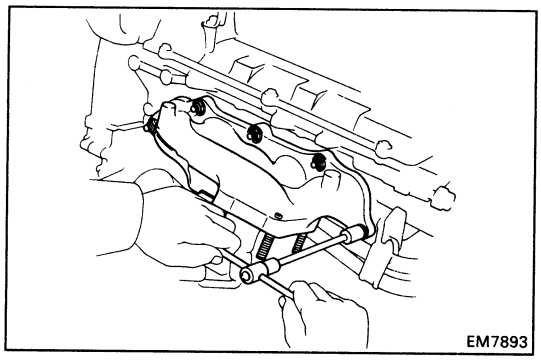

18. **REMOVE EXHAUST MANIFOLD**
(a) Remove the seven nuts, exhaust manifold and gasket.

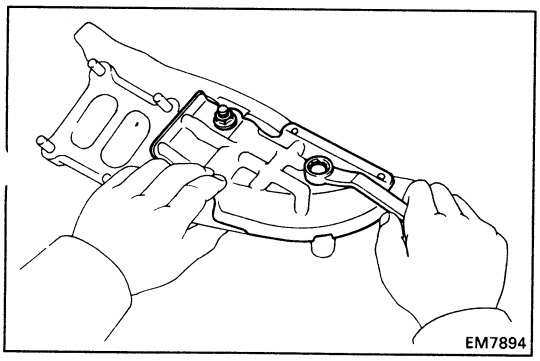

(b) Remove the bolt, nut and heat insulator.

19. **REMOVE DISTRIBUTOR (See pages IG-14 and 15)**

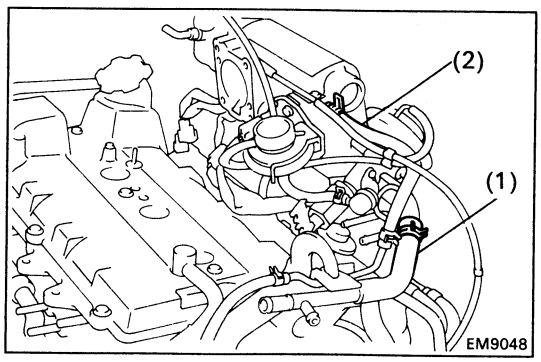

20. **REMOVE NO.2 AIR TUBE**
(a) Disconnect the following hose:
(1) Air hose from No.1 air tube
(2) Air hose from intake manifold

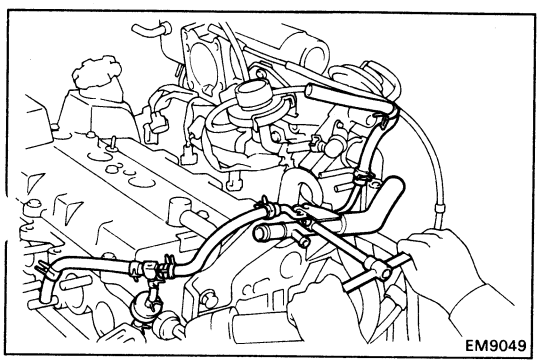

(b) Remove the bolt and No.2 air tube.

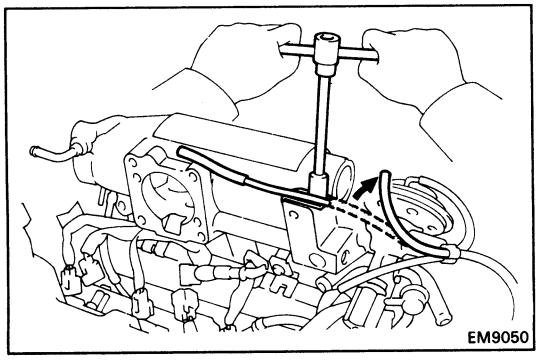

21. REMOVE LH ENGINE HANGER

Remove the two bolts and engine hanger.

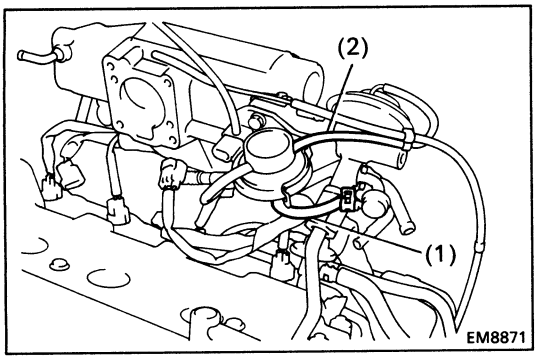

22. REMOVE EGR VACUUM MODULATOR AND VSV

(a) Disconnect the EGR VSV connector.

(b) Disconnect the following hoses:

(1) Vacuum hose from EGR valve

(2) Vacuum hose from EGR vacuum modulator

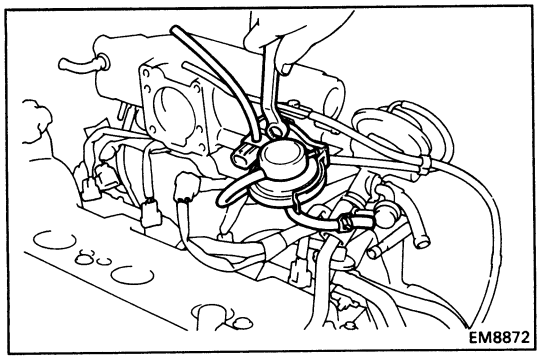

(c) Remove the bolt, vacuum modulator and VSV assembly.

23. REMOVE VACUUM PIPE

(a) Disconnect the vacuum hose from the vacuum pipe.

(b) Remove the bolt and vacuum pipe.

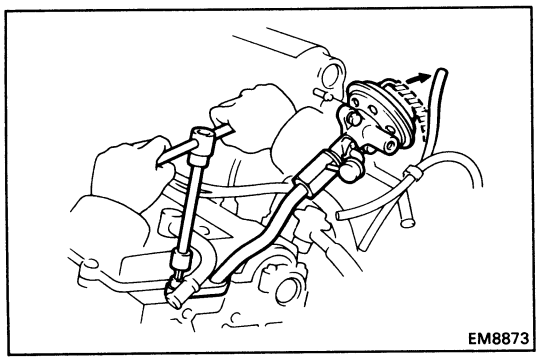

24. REMOVE EGR VALVE AND PIPE

(a) Disconnect the vacuum hose from the EGR valve.

(b) Remove the four bolts, the EGR valve, pipe assembly and two gaskets.

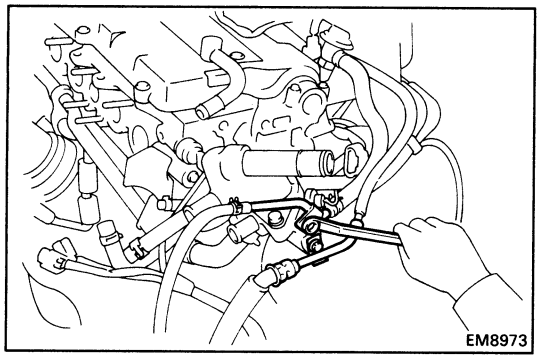

25. REMOVE WATER OUTLET AND HOUSING

(a) Disconnect the following connectors:
- Water temperature sender gauge connector
- Water temperature sensor
- Cold start injector time switch connector

(b) Remove the bolt, and disconnect the fuel inlet hose.

(c) Remove the bolt, and disconnect the fuel return hose.

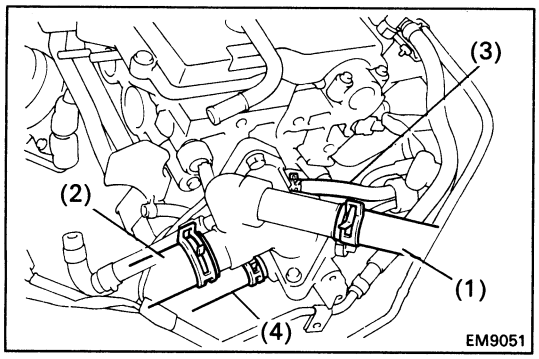

(d) Disconnect the following hoses:
(1) Water filler hose
(2) Radiator hose
(3) Water by-pass pipe hose from ISC valve
(4) Heater water hose

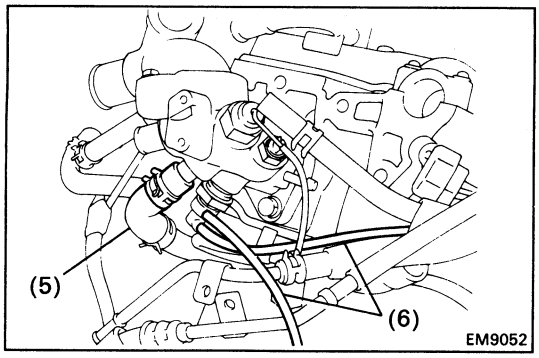

(5) Water by-pass hose from water by-pass pipe
(6) Two EVAP VSV vacuum hoses

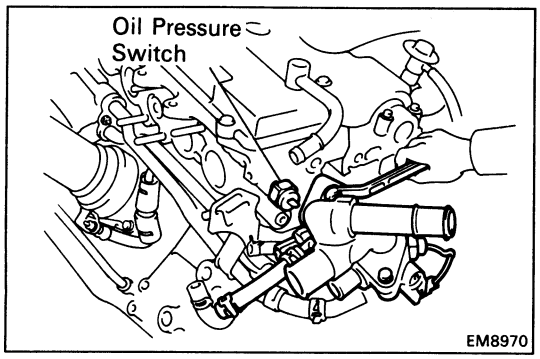

(e) Remove the two bolts, the water outlet, housing assembly and gasket.

26. REMOVE OIL PRESSURE SWITCH

27. REMOVE OIL COOLER
(See steps 7 to 10 on pages LU-18 and 19)

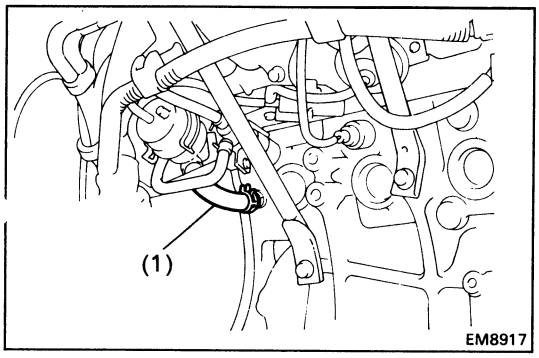

28. REMOVE WATER BY-PASS PIPE

(a) Disconnect the following hoses:
(1) Water by-pass hose from cylinder block

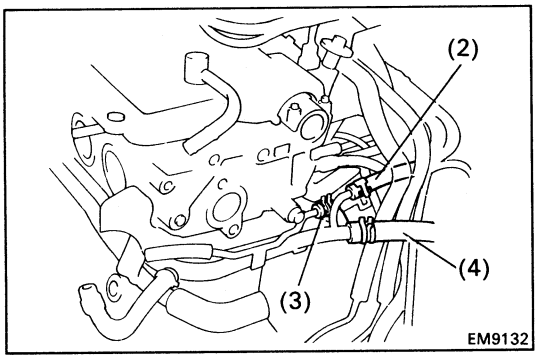

(2) Water by-pass hoses from No.1 air tube
(3) Vacuum hose from turbocharging pressure VSV
(4) Heater water hose

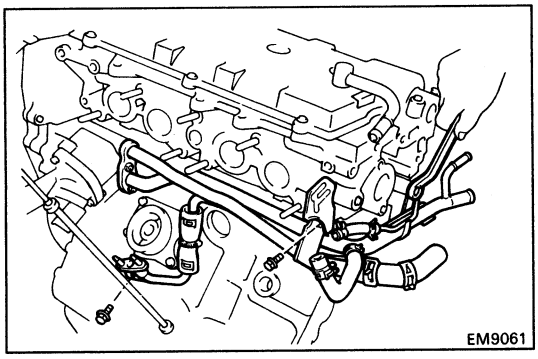

(b) Remove the two bolts, two nuts, water by-pass pipe, gasket and O-ring.

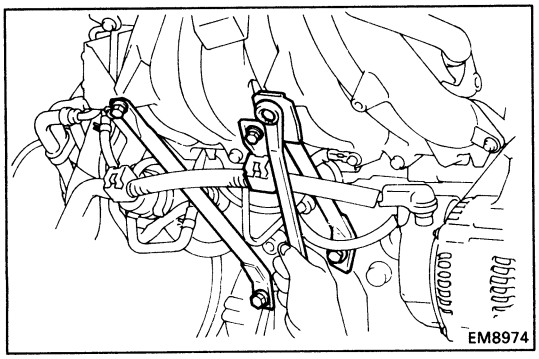

29. REMOVE INTAKE MANIFOLD STAYS

(a) Disconnect the alternator wire clamp from the wire bracket.
(b) Remove the two bolts and manifold stay. Remove the two manifold stays

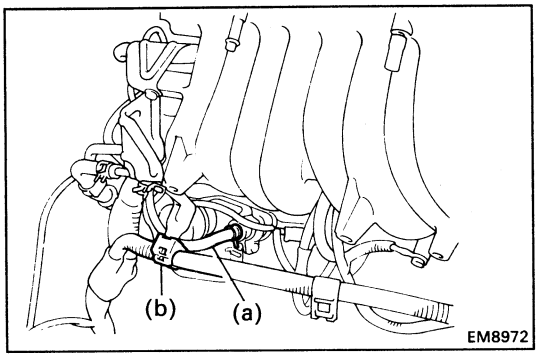

30. REMOVE NO.1 AIR TUBE

(a) Disconnect the Vacuum hose from the turbocharging pressure VSV.
(b) Disconnect the alternator wire clamp from the wire bracket.

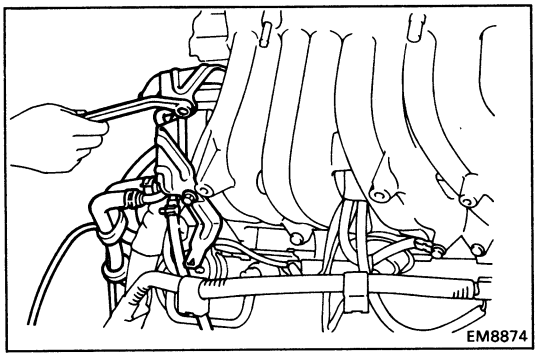

(c) Remove the two bolts, wire bracket and air tube.

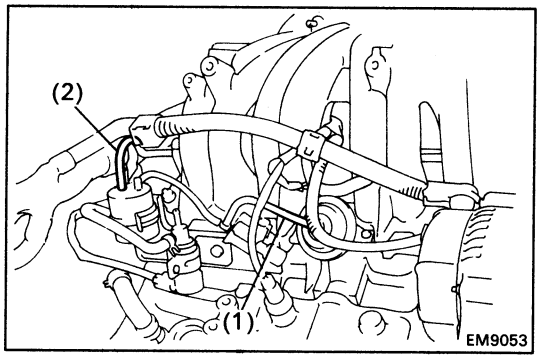

31. REMOVE T-VIS VACUUM TANK, T-VIS VSV, TURBOCHARGING PRESSURE VSV AND BRACKET

(a) Disconnect the following connectors:
- T-VIS VSV connector
- Turbocharging pressure VSV connector

(b) Disconnect the following hoses:
(1) Vacuum hose (from T-VIS VSV) from T-VIS actuator
(2) Vacuum hose (from T-VIS vacuum tank) from intake manifold

(c) Remove the two bolts, the T-VIS vacuum tank, T-VIS VSV, turbocharging pressure VSV and bracket assembly.

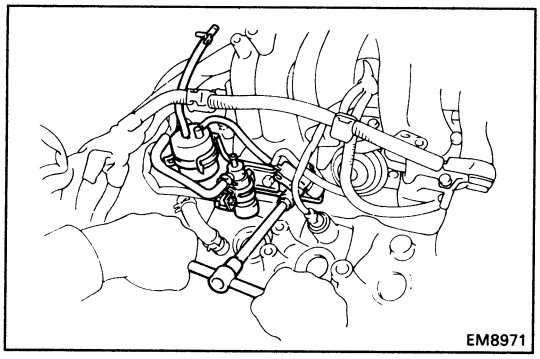

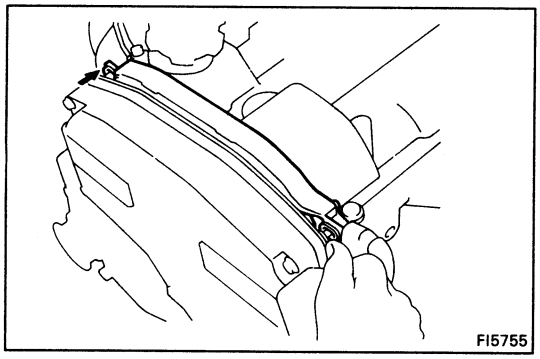

32. DISCONNECT ENGINE WIRE FROM INTAKE MANIFOLD

(a) Disconnect the two engine wire clamps from the mount bolts on the No.2 timing belt covers.

(b) Disconnect the injector connector.

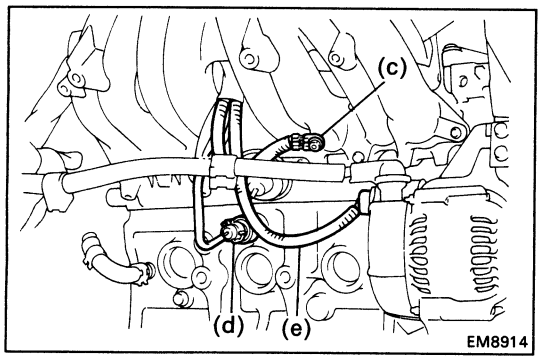

(c) Remove the bolt, and disconnect the ground strap.

(d) Disconnect the knock sensor connector.

(e) Disconnect the alternator connector.

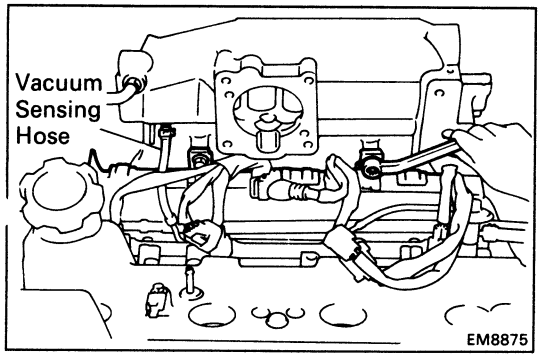

(f) Disconnect the vacuum sensing hose from the intake manifold.

(g) Remove the two bolts, and disconnect the engine wire from the intake manifold.

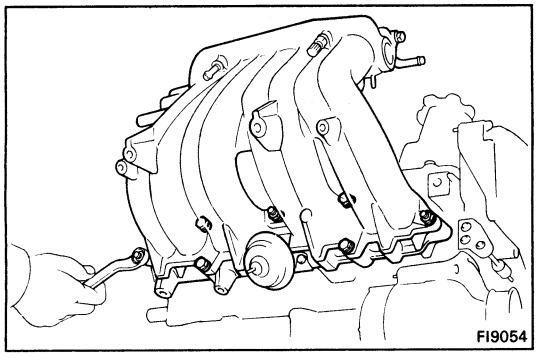

33. REMOVE INTAKE MANIFOLD AND T-VIS VALVE

Remove the four bolts, three nuts, intake manifold, T-VIS VSV and two gaskets.

34. REMOVE DELIVERY PIPE AND INJECTORS
(See steps 9, 13 to 15 on pages FI-111 and 112)

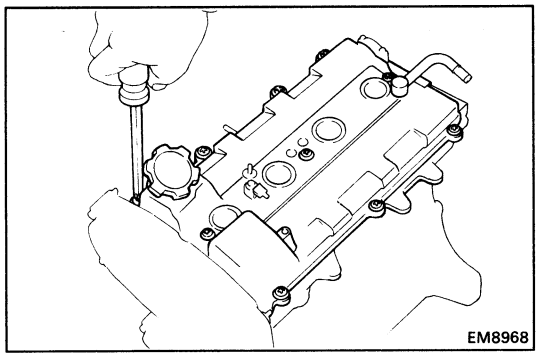

35. REMOVE CYLINDER HEAD COVER

Remove the ten screws, seal washers, head cover and two gaskets.

36. REMOVE CAMSHAFT TIMING PULLEYS
(See steps 9 to 21 on pages EM-27 to 29)

37. REMOVE NO.1 IDLER PULLEY
(See step 26 on page EM-31)

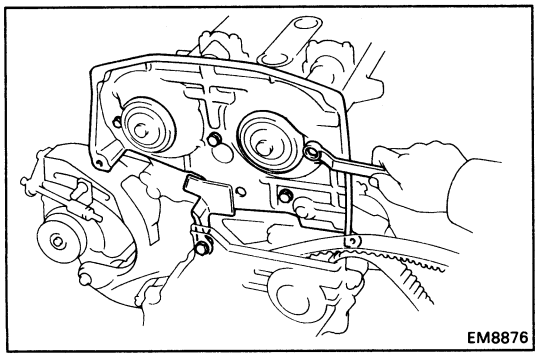

38. REMOVE NO.3 TIMING BELT COVER

Remove the five bolts and timing belt cover.

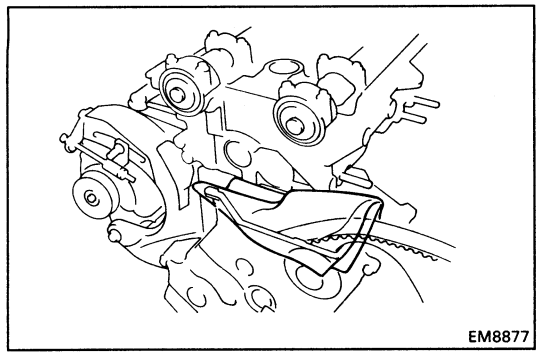

HINT:

- Support the timing belt, so that the meshing of the crankshaft timing pulley and timing belt does not shift.
- Be careful not to drop anything inside the timing belt cover.
- Do not allow the timing belt to come into contact with oil, water or dust.

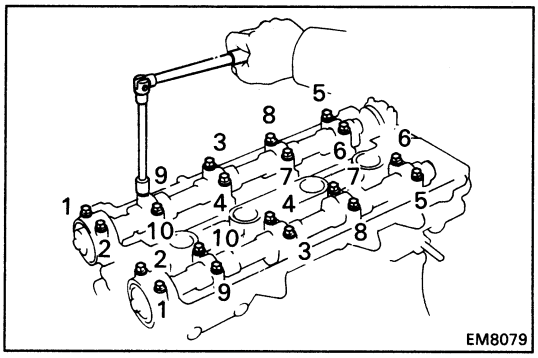

39. REMOVE CAMSHAFTS

Uniformly loosen and remove the ten bearing cap bolts in several passes in the sequence shown, and remove the five bearing caps, oil seal and camshaft. Remove the intake and exhaust camshafts.

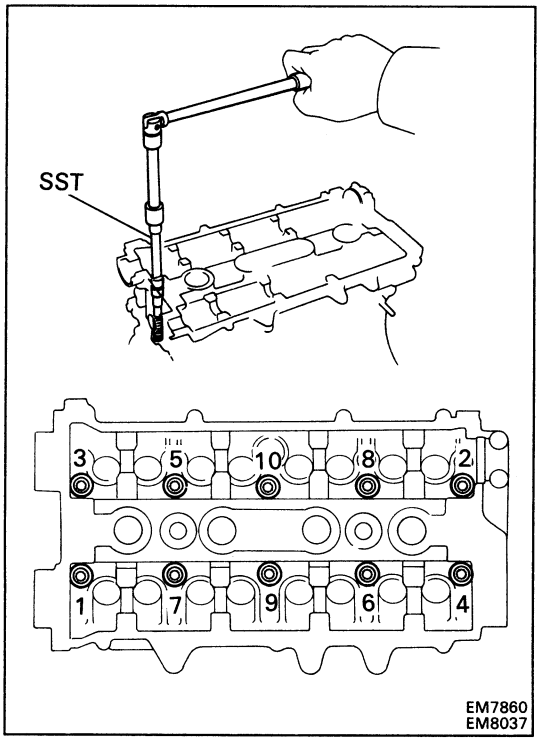

40. REMOVE CYLINDER HEAD

(a) Using SST, uniformly loosen and remove the ten cylinder head bolts in several passes in the sequence shown.

SST 09043-38100

HINT: Cylinder head warpage or cracking could result from removing in the incorrect order.

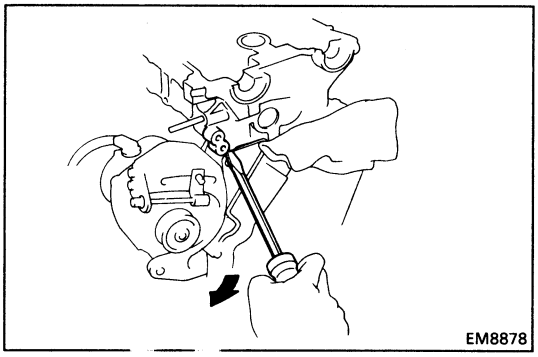

(b) Lift the cylinder head from the dowels on the cylinder block, and place the cylinder head on wooden blocks on a bench.

HINT: If the cylinder head is difficult to lift off, pry between the cylinder head and cylinder block with a screwdriver.

NOTICE: Be carefull not to damage the contact surfaces of the cylinder head and cylinder block.

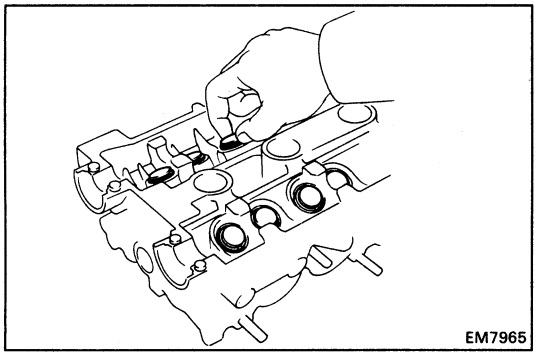
EM7965

DISASSEMBLY OF CYLINDER HEAD

(See pages EM-61 and 62)

1. REMOVE VALVE LIFTERS AND SHIMS

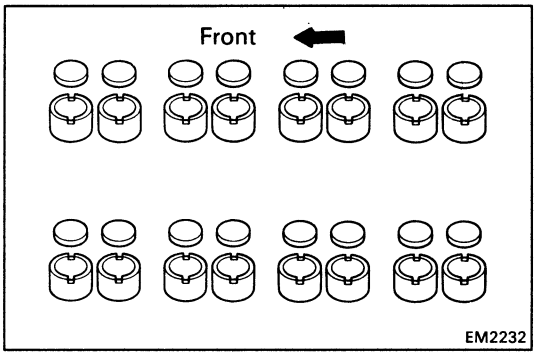

EM2232

HINT: Arrange the valve lifters and shims in correct order.

2. REMOVE VALVES

(a) Using SST, compress the valve spring and remove the two keepers.

SST 09202-70010

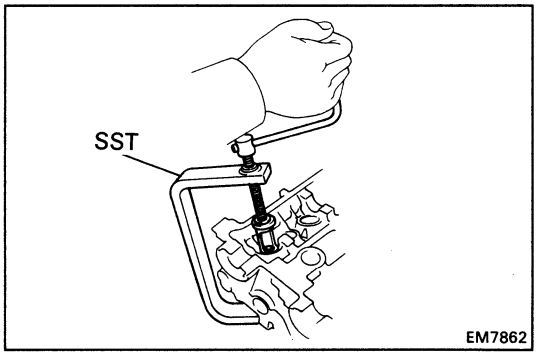

EM7862

(b) Remove the spring retainer, valve spring, valve and spring seat.

HINT: Arrange the valves, valve springs, spring seats and spring retainers in correct order.

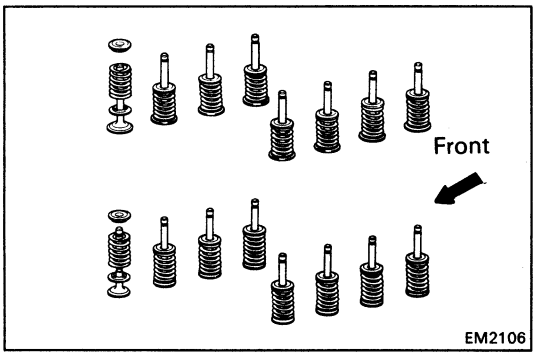

EM2106

(c) Using needle-nose pliers, remove the oil seal.

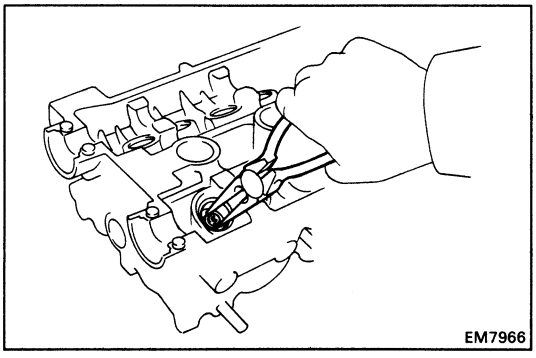
EM7966

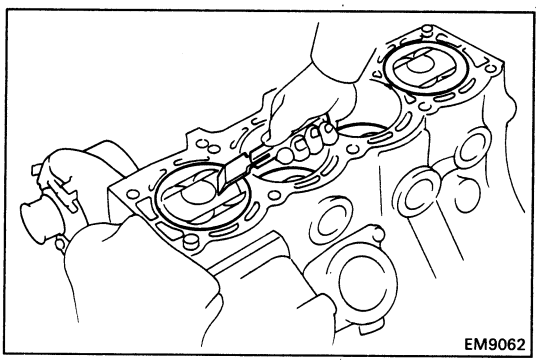
EM9062

INSPECTION, CLEANING AND REPAIR OF CYLINDER HEAD COMPONENTS

1. CLEAN TOP SURFACES OF PISTONS AND CYLINDER BLOCK

(a) Turn the crankshaft, and bring each piston to top dead center (TDC). Using a gasket scraper, remove all the carbon from the piston top surface.

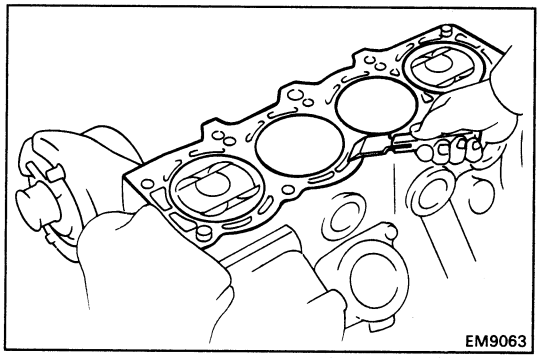
EM9063

(b) Using a gasket scraper, remove all the gasket material from the top surface of the cylinder block.

(c) Using compressed air, blow carbon and oil from the bolt holes.

CAUTION: Protect your eyes when using high-compressed air.

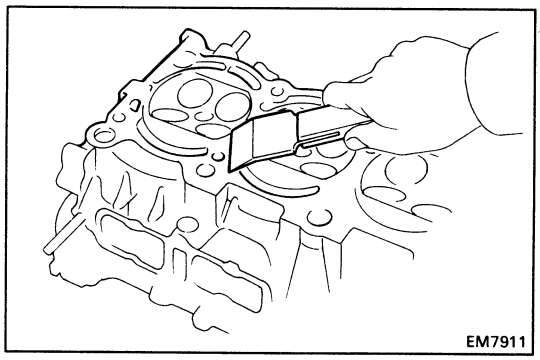
EM7911

2. CLEAN CYLINDER HEAD

A. Remove gasket material

Using a gasket scraper, remove all the gasket material from the cylinder block surface.

NOTICE: Be careful not to scratch the cylinder block contact surface.

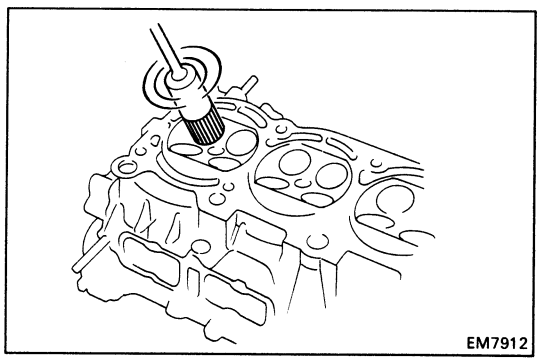
EM7912

B. Clean combustion chambers

Using a wire brush, remove all the carbon from the combustion chambers.

NOTICE: Be careful not to scratch the cylinder block contact surface.

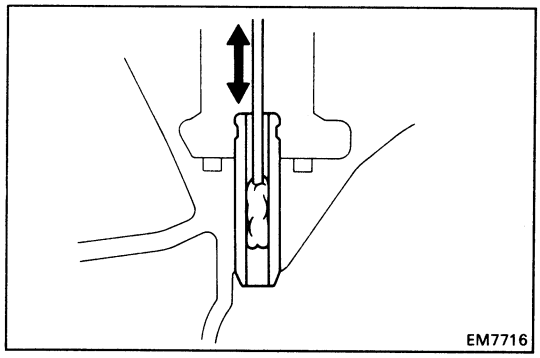
EM7716

C. Clean valve guide bushings

Using a valve guide bushing brush and solvent, clean all the guide bushings.

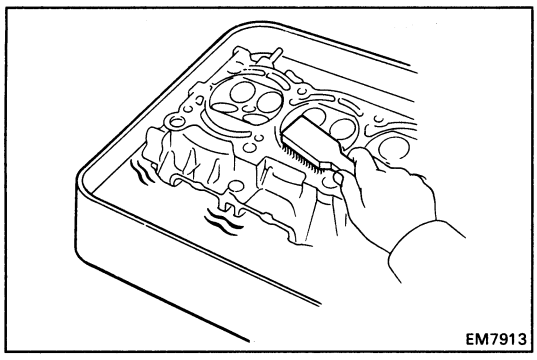
EM7913

D. Clean cylinder head

Using a soft brush and solvent, thoroughly clean the cylinder head.

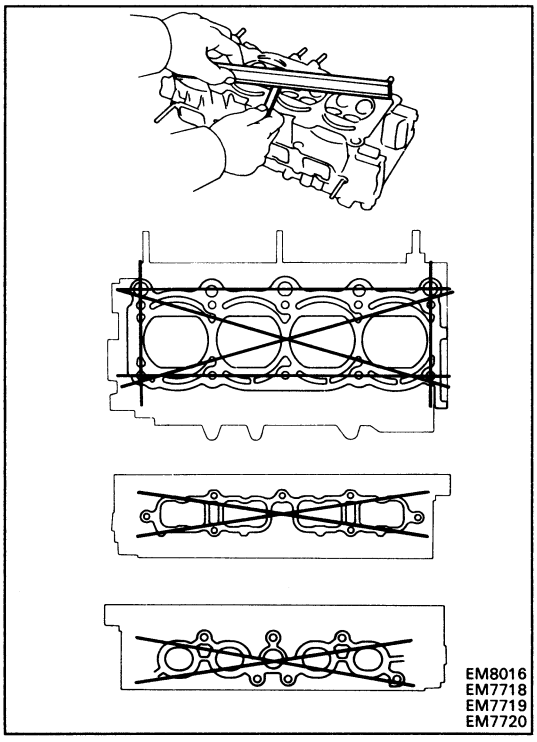
EM8016
EM7718
EM7719
EM7720

3. INSPECT CYLINDER HEAD

A. Inspect for flatness

Using precision straight edge and feeler gauge, measure the surfaces contacting the cylinder block, T-VIS valve and exhaust manifold for warpage.

Maximum warpage:

Cylinder block side	**0.20 mm (0.0079 in.)**
T-VIS valve side	**0.20 mm (0.0079 in.)**
Exhaust manifold side	**0.30 mm (0.0118 in.)**

If warpage is greater than maximum, replace the cylinder head.

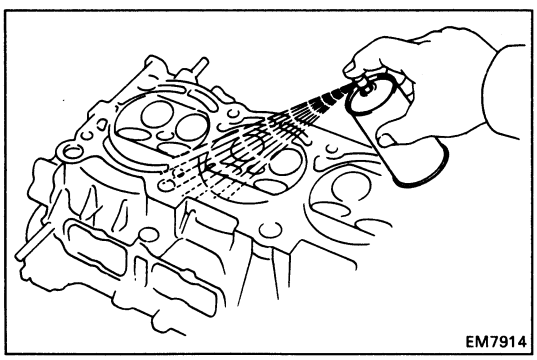
EM7914

B. Inspect for cracks

Using a dye penetrant, check the combustion chamber, intake ports, exhaust ports and cylinder block surface for cracks.

If cracked, replace the cylinder head.

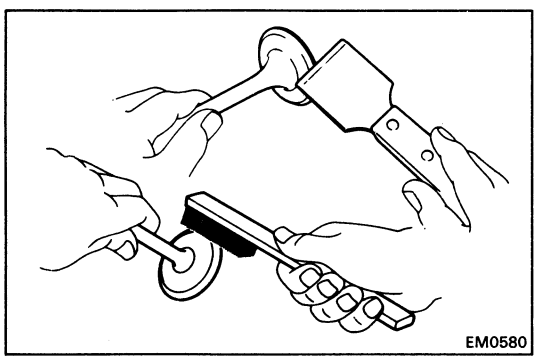
EM0580

4. CLEAN VALVES

(a) Using a gasket scraper, chip off any carbon from the valve head.

(b) Using a wire brush, thoroughly clean the valve.

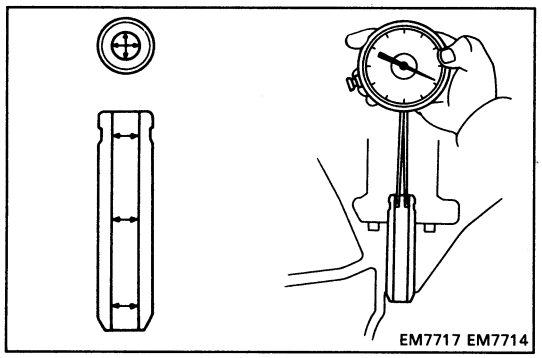

5. INSPECT VALVE STEMS AND GUIDE BUSHINGS

(a) Using a caliper gauge, measure the inside diameter of the guide bushing.

Bushing inside diameter:
6.000 – 6.018 mm (0.2362 – 0.2369 in.)

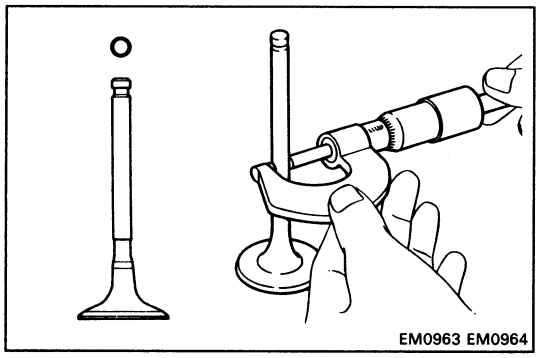

(b) Using a micrometer, measure the diameter of the valve stem.

Valve stem diameter:

Intake	**5.960 – 5.975 mm (0.2346 – 0.2352 in.)**
Exhaust	**5.955 – 5.970 mm (0.2344 – 0.2350 in.)**

(c) Subtract the valve stem diameter measurement from the guide bushing inside diameter measurement.

Standard oil clearance:

Intake	**0.025 – 0.058 mm (0.0010 – 0.0023 in.)**
Exhaust	**0.030 – 0.063 mm (0.0012 – 0.0025 in.)**

Maximum oil clearance:

Intake	**0.08 mm (0.0031 in.)**
Exhaust	**0.10 mm (0.0039 in.)**

If the clearance is greater than maximum, replace the valve and guide bushing.

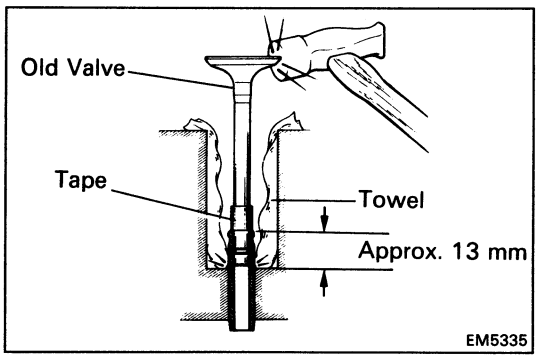

6. IF NECESSARY, REPLACE VALVE GUIDE BUSHINGS

(a) (w/ Snap Ring)
Insert an old valve wrapped with tape into the valve guide bushing, and break off the valve guide bushing by hitting it with a hammer. Remove the snap ring.

HINT: Wrap the tape approx. 13 mm (0.51 in.) from the valve stem end.

NOTICE: Be careful not to damage the valve lifter hole.

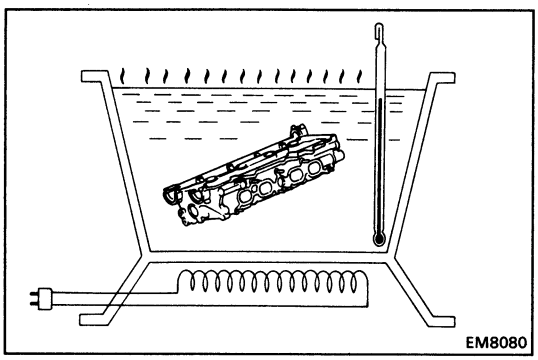

(b) Gradually heat the cylinder head to 80 – 100°C (176 – 212°F).

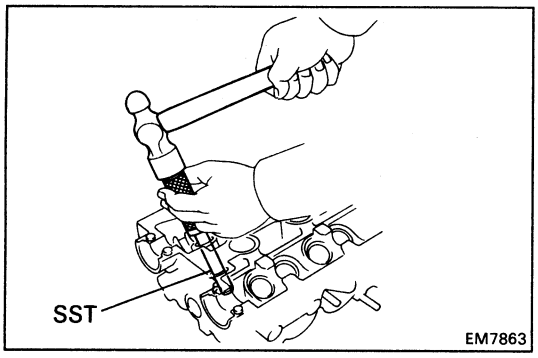

(c) Using SST and a hammer, tap out the guide bushing.

SST 09201-70010

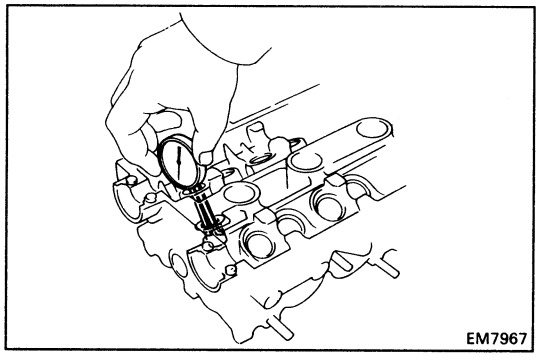

(d) Using a caliper gauge, measure the bushing bore diameter of the cylinder head.

Both intake and exhaust

Bushing bore diameter mm(in.)	Bushing size
10.988 – 11.006 (0.4326 – 0.4333)	Use STD
11.038 – 11.056 (0.4346 – 0.4353)	Use O/S 0.05

(e) Select a new guide bushing (STD size or O/S 0.05).

If the bushing bore diameter of the cylinder head is greater than 11.006 mm (0.4333 in.), machine the bushing bore to the following dimension:

11.038 – 11.056 mm (0.4346 – 0.4353 in.)

If the bushing bore diameter of the cylinder head is greater than 11.056 mm (0.4353 in.), replace the cylinder head.

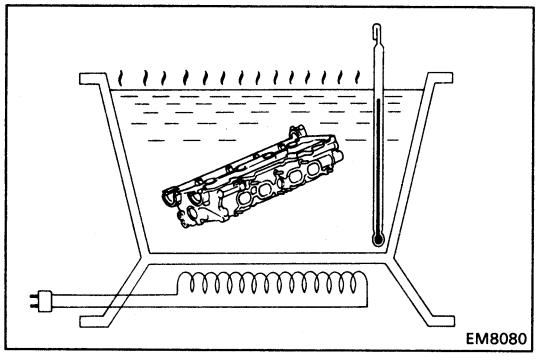

(f) Gradually heat the cylinder head to 80 – 100°C (176 – 212°F).

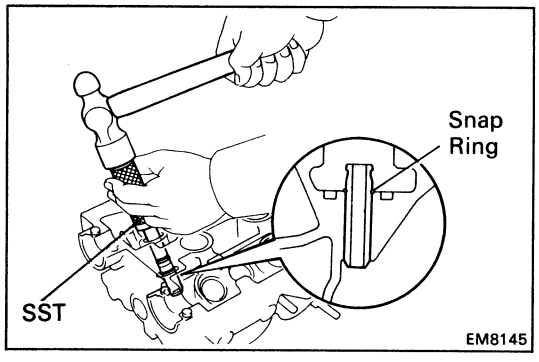

(g) Using SST and a hammer, tap in a new guide bushing until the snap ring makes contact with the cylinder head.

SST 09201-70010

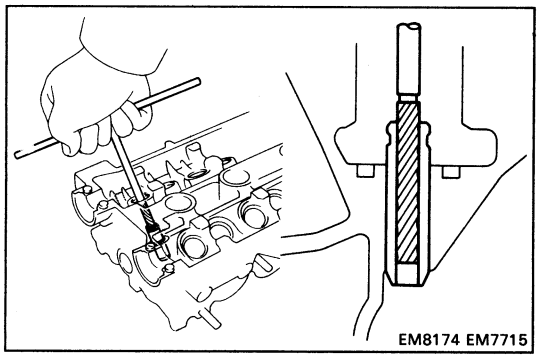

(h) Using a sharp 6 mm reamer, ream the guide bushing to obtain the standard specified clearance (See page EM-75) between the guide bushing and valve stem.

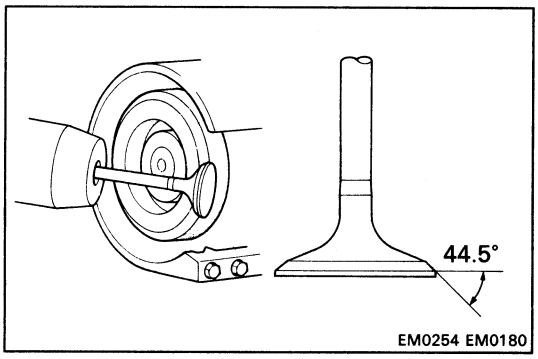

7. INSPECT AND GRIND VALVES

(a) Grind the valve enough to remove pits and carbon.

(b) Check that the valve is ground to the correct valve face angle.

Valve face angle: 44.5°

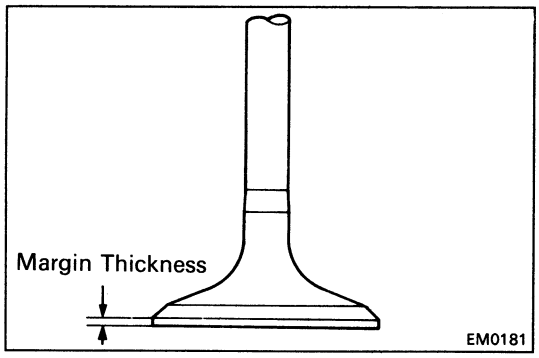

(c) Check the valve head margin thickness.

Standard margin thickness: 0.8 – 1.2 mm (0.031 – 0.047 in.)

Minimum margin thickness: 0.5 mm (0.020 in.)

If the margin thickness is less than minimum, replace the valve.

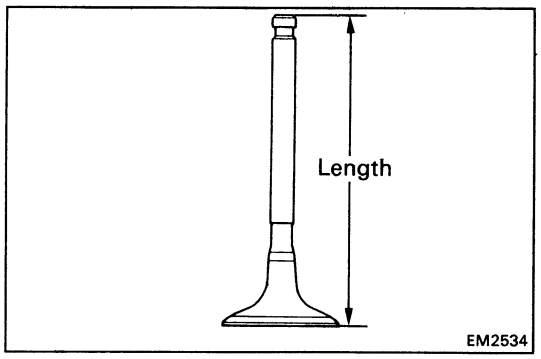

(d) Check the valve overall length.

Standard overall length:
Intake 105.50 mm (4.1535 in.)
Exhaust 99.55 mm (3.9193 in.)

Minimum overall length:
Intake 104.80 mm (4.1260 in.)
Exhaust 98.85 mm (3.8917 in.)

If the overall length is less than minimum, replace the valve.

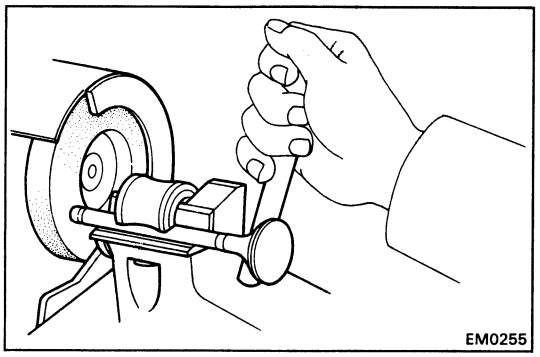

(e) Check the surface of the valve stem tip for wear.

If the valve stem tip is worn, resurface the tip with a grinder or replace the valve.

NOTICE: Do not grind off more than the minimum.

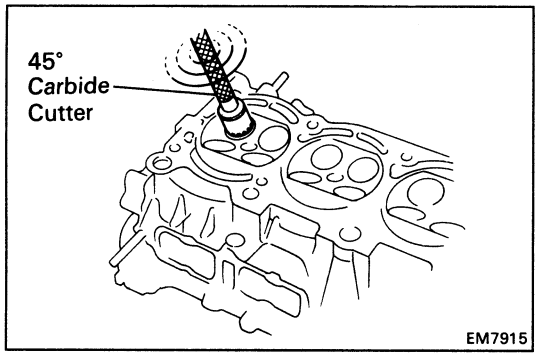

8. INSPECT AND CLEAN VALVE SEATS

(a) Using a 45° carbide cutter, resurface the valve seats.

Remove only enough metal to clean the seats.

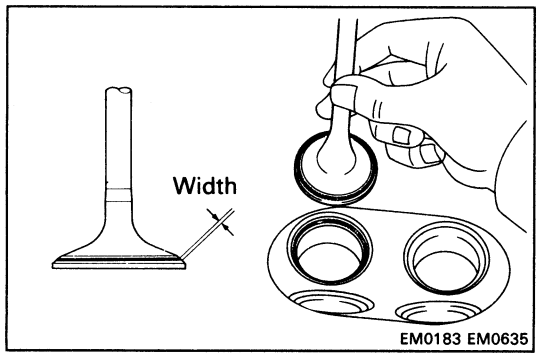

(b) Check the valve seating position.

Apply a thin coat of prussion blue (or white lead) to the valve face. Lightly press the valve against the seat. Do not rotate the valve.

(c) Check the valve face and seat for the following:

- If blue appears 360° around the face, the valve is concentric. If not, replace the valve.
- If blue appears 360° around the valve seat, the guide and face are concentric. If not, resurface the seat.
- Check that the seat contact is in the middle of the valve face with the following width:

1.0 – 1.4 mm (0.039 – 0.055 in.)

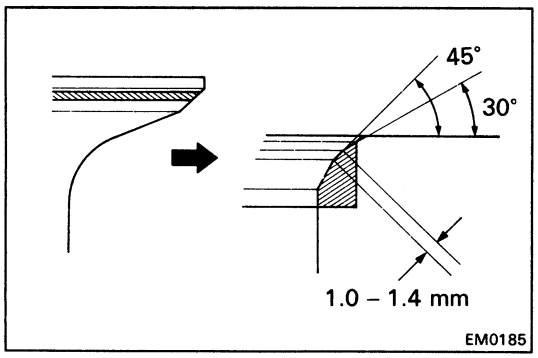

If not, correct the valve seats as follows:

(1) If the seating is too high on the valve face, use 30° and 45° cutters to correct the seat.

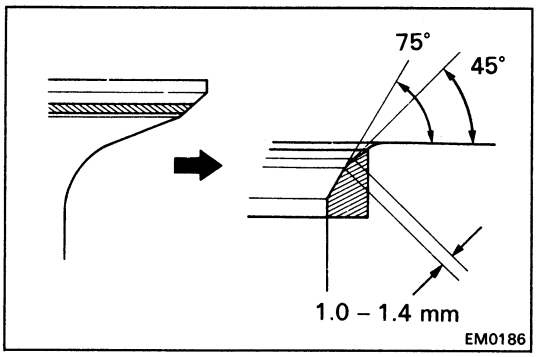

(2) If the seating is too low on the valve face, use 75° and 45° cutters to correct the seat.

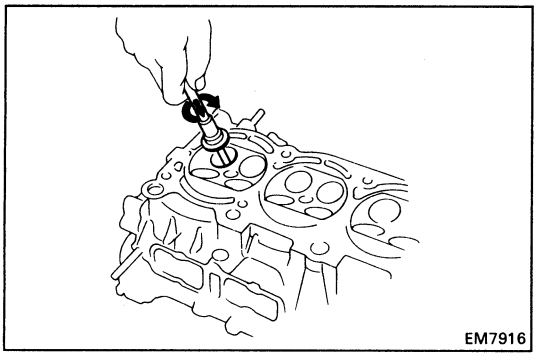
EM7916

(d) Hand-lap the valve and valve seat with an abrasive compound.

(e) After hand-lapping, clean the valve and valve seat.

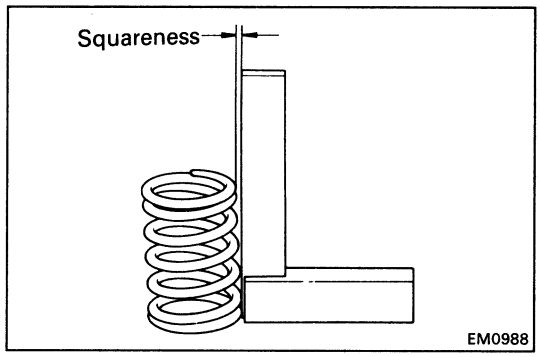

EM0988

9. INSPECT VALVE SPRINGS

(a) Using a steel square, measure the squareness of the valve spring.

Maximum squareness: 2.0 mm (0.079 in.)

If squareness is greater than maximum, replace the valve spring.

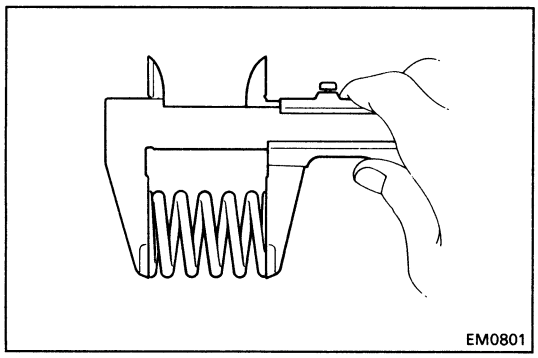
EM0801

(b) Using vernier calipers, measure the free length of the valve spring.

Free length: 44.43 mm (1.7492 in.)

If the free length is not as specified, replace the valve spring.

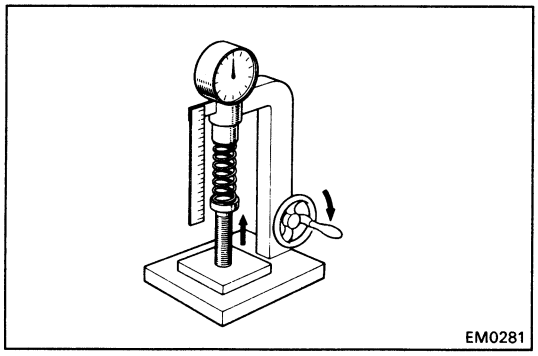
EM0281

(c) Using a spring tester, measure the tension of the valve spring at the specified installed length.

Installed tension:
20.5 – 24.1 kg (45.2 – 53.1 lb, 201 – 236 N)
at 34.4 mm (1.354 in.)

If the installed tension is not as specified, replace the valve spring.

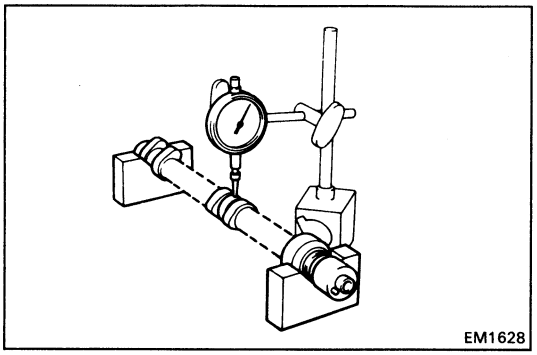
EM1628

10. INSPECT CAMSHAFTS AND BEARINGS

A. Inspect camshaft for runout

(a) Place the camshaft on V-blocks.

(b) Using a dial indicator, measure the circle runout at the center journal.

Maximum circle runout: 0.06 mm (0.0024 in.)

If the circle runout is greater than maximum, replace the camshaft.

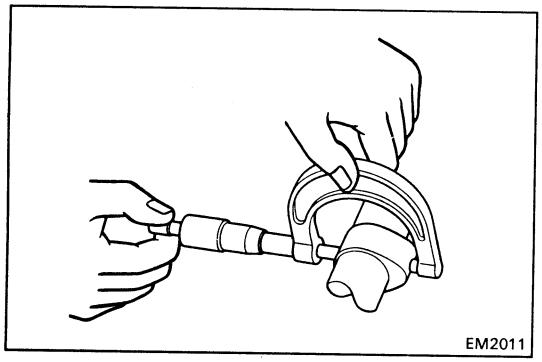
EM2011

B. Inspect cam lobes

Using a micrometer, measure the cam lobe height.

Standard cam lobe height: 41.010 – 41.110 mm (1.6146 – 1.6185 in.)

Minimum cam lobe height: 39.90 mm (1.5709 in.)

If the cam lobe height is greater than minimum, replace the camshaft.

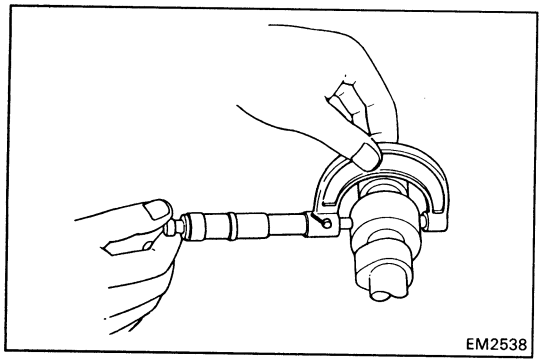
EM2538

C. Inspect camshaft journals

Using a micrometer, measure the journal diameter.

Journal diameter: 26.959 – 26.975 mm (1.0614 – 1.0620 in.)

If the journal diameter is not as specified, check the oil clearance.

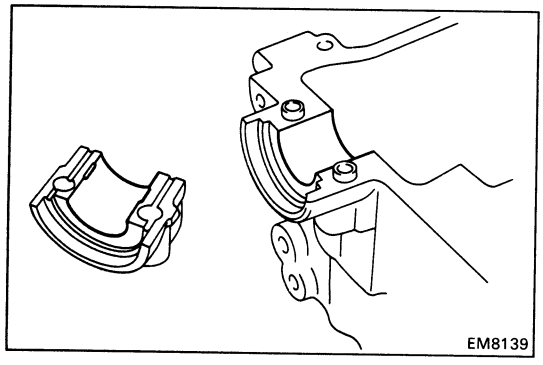
EM8139

D. Inspect camshaft bearings

Check the bearings for flaking and scoring.

If the bearings are damaged, replace the bearing caps and cylinder head as a set.

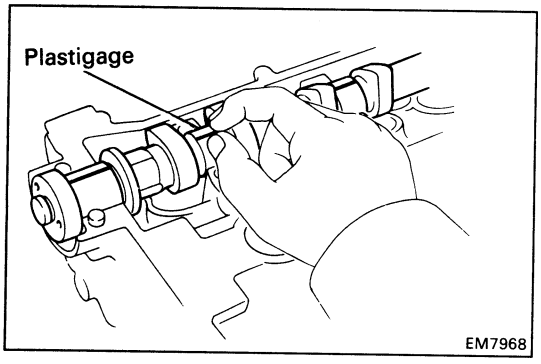

EM7968

E. Inspect camshaft journal oil clearance

(a) Clean the bearing caps and camshaft journals.

(b) Place the camshafts on the cylinder head.

(c) Lay a strip of Plastigage across each of the camshaft journals.

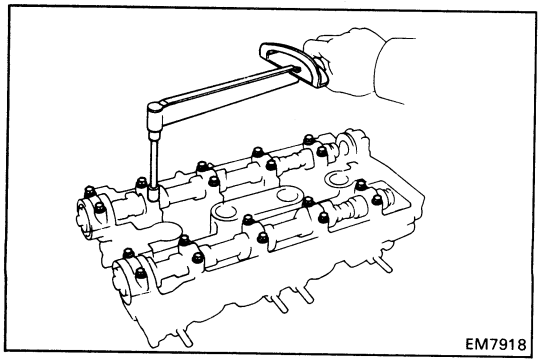
EM7918

(d) Install the bearing caps.
(See step 2 on page EM-87)

Torque: 190 kg-cm (14 ft-lb, 19 N·m)

NOTICE: Do not turn the camshaft.

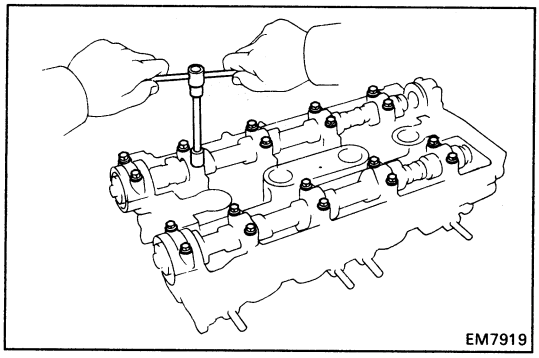
EM7919

(e) Remove the bearing caps.

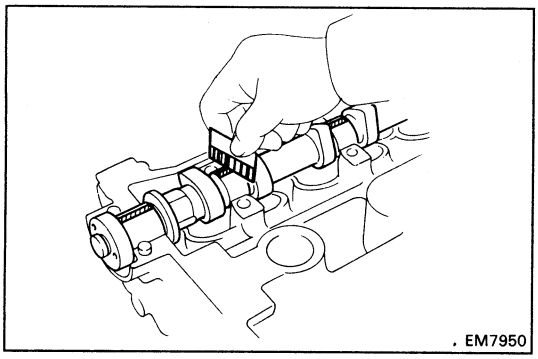
EM7950

(f) Measure the Plastigage at its widest point.

Standard oil clearance: 0.025 – 0.062 mm (0.0010 – 0.0024 in.)

Maximum oil clearance: 0.08 mm (0.0031 in.)

If the oil clearance is greater than maximum, replace the camshaft. If necessary, replace the bearing caps and cylinder head as a set.

(g) Completely remove the Plastigage.

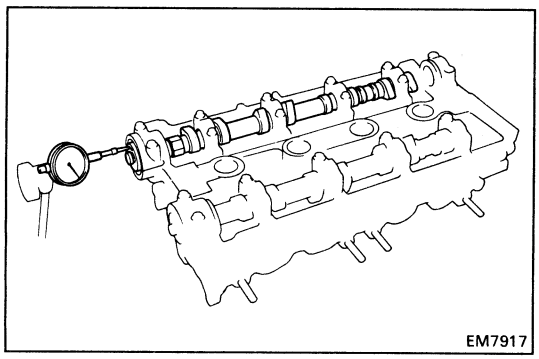
EM7917

F. Inspect camshaft thrust clearance

(a) Install the camshafts.
(See step 2 on page EM-87)

(b) Using a dial indicator, measure the thrust clearance while moving the camshaft back and forth.

Standard thrust clearance: 0.120 – 0.240 mm (0.0047 – 0.0094 in.)

Maximum thrust clearance: 0.30 mm (0.0118 in.)

If the thrust clearance is greater than maximum, replace the camshaft. If necessary, replace the bearing caps and cylinder head as a set.

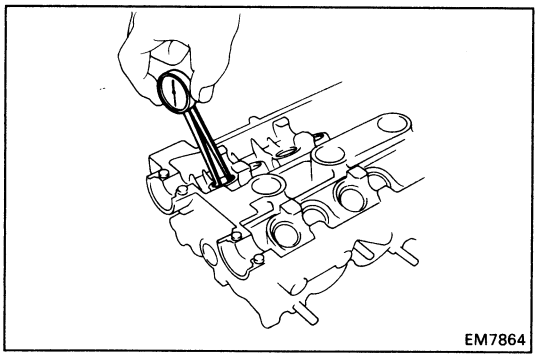
EM7864

11. INSPECT VALVE LIFTERS AND LIFTER BORES

(a) Using a caliper gauge, measure the lifter bore diameter of the cylinder head.

Lifter bore diameter: 28.000 – 28.021 mm (1.1024 – 1.1032 in.)

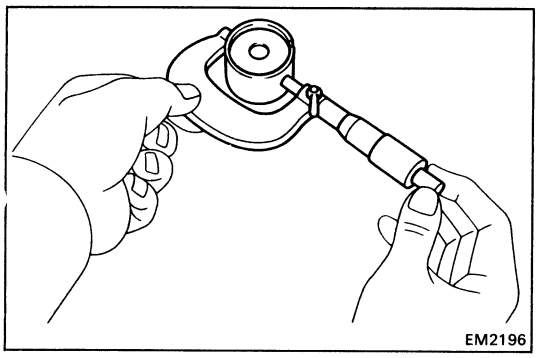
EM2196

(b) Using a micrometer, measure the lifter diameter.

Lifter diameter: 27.975 – 27.985 mm (1.1014 – 1.1018 in.)

(c) Subtract the lifter diameter measurement from the lifter bore diameter measurement.

Standard oil clearance: 0.015 – 0.046 mm (0.0005 – 0.0018 in.)

Maximum oil clearance: 0.07 mm (0.0028 in.)

If the oil clearance is greater than maximum, replace the lifter. If necessary, replace the cylinder head.

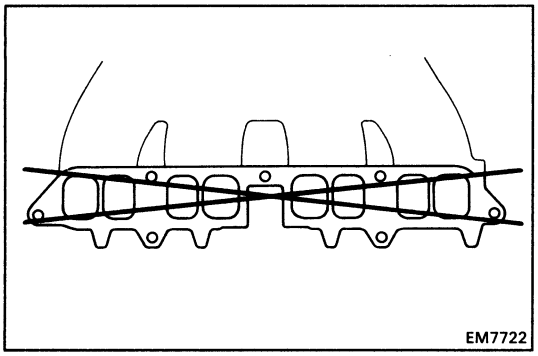
EM7722

12. INSPECT INTAKE AND EXHAUST MANIFOLDS

(Intake manifold)

Using precision straight edge and feeler gauge, measure the surface contacting the T-VIS valve for warpage.

Maximum warpage: 0.20 mm (0.0079 in.)

If warpage is greater than maximum, replace the intake manifold.

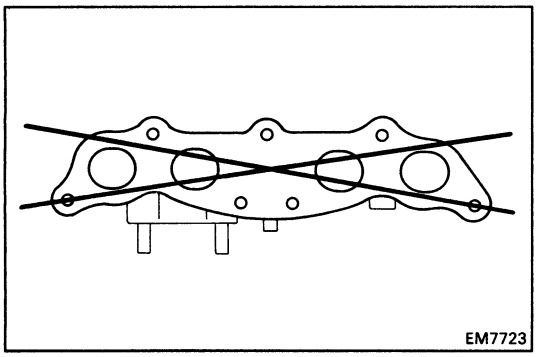
EM7723

(Exhaust manifold)

Using precision straight edge and feeler gauge, measure the surface contacting the cylinder head for warpage.

Maximum warpage: 0.20 mm (0.0079 in.)

If warpage is greater than maximum, replace the exhaust manifold.

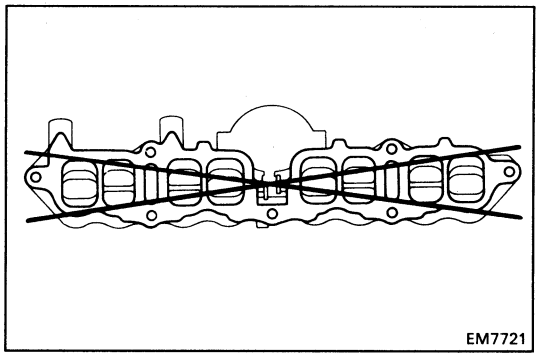
EM7721

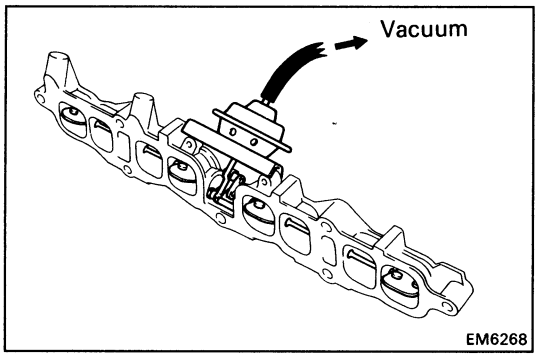

EM6268

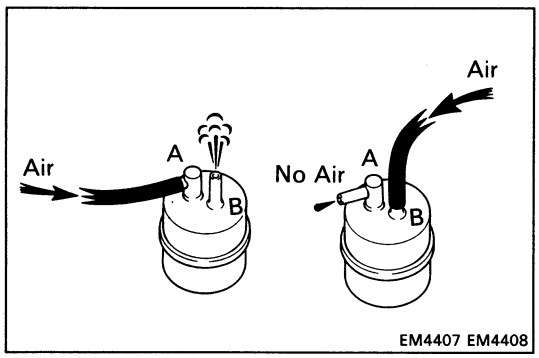

EM4407 EM4408

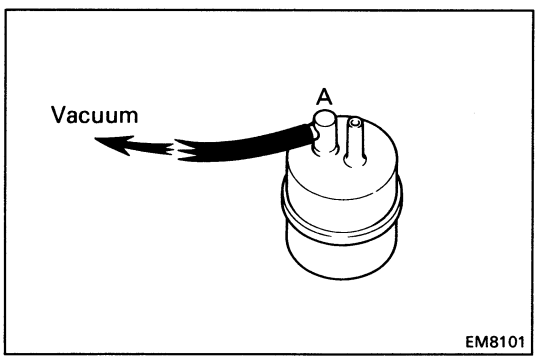

EM8101

INSPECTION OF TOYOTA – VARIABLE INDUCTION SYSTEM (T- VIS) COMPONENTS

1. INSPECT T-VIS VALVE

A. Inspect for flatness

Using precision straight edge and feeler gauge, measure the surfaces contacting the cylinder head and intake manifold for warpage.

Maximum warpage: 0.20 mm (0.0079 in.)

If warpage is greater than maximum, replace the T-VIS valve.

B. Inspect for operation

(a) With 400 mmhg (15.75 in.Hg, 53.3 kPa) of vacuum applied to the actuator, check that the control valve moves smoothly to the fully closed position.

(b) With the vacuum released, check that the control valve fully opens quickly.

If operation is not as specified, replace the T-VIS valve.

2. INSPECT VACUUM TANK

(a) Check that air flows from ports A to B.

(b) Check that air does not flow from ports B to A.

(c) Apply 500 mmHg (19.69 ib.Hg, 66.7 kPa) of vacuum to port A, and check hat there is no change in vacuum after one minuite.

If operation is not as specified, replace the vacuum tank.

3. INSPECT T-VIS VSV (See page FI-163)

ASSEMBLY OF CYLINDER HEAD

(See pages EM-61 and 62)

HINT:

- Thoroughly clean all parts to be assembled.
- Before installing the parts, apply new engine oil to all sliding and rotating surfaces.
- Replace all gaskets and oil seals with new ones.

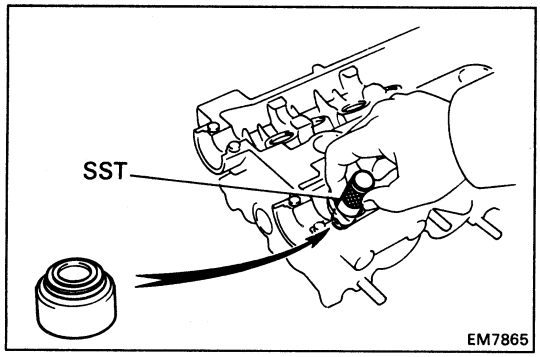

1. INSTALL VALVES

(a) Using SST, push in a new oil seal.

SST 09201-41020

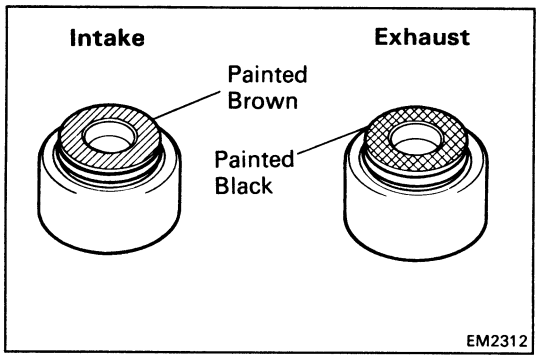

HINT: The intake valve oil seal is brown and the exhaust valve oil seal is black.

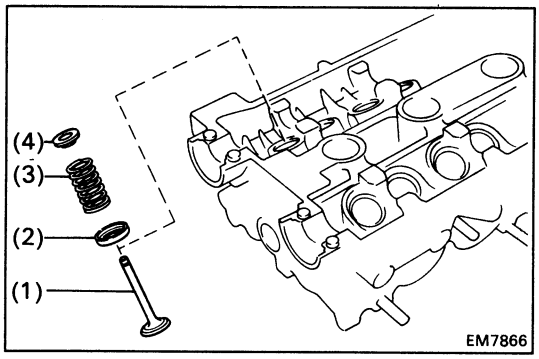

(b) Install the following parts:

(1) Valve
(2) Spring seat
(3) Valve spring
(4) Spring retainer

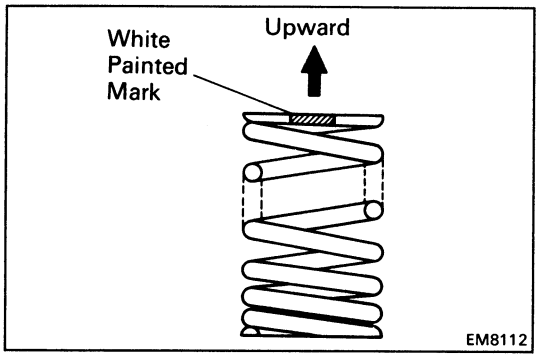

HINT: Install the valve spring, facing the white painted mark upward.

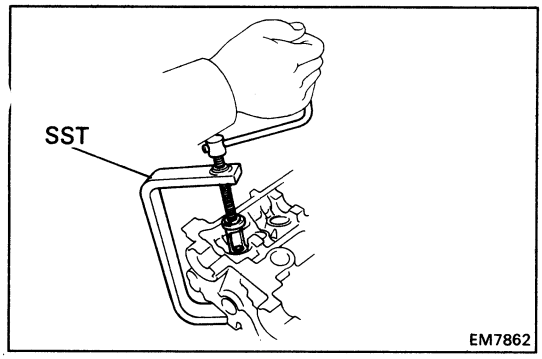

(c) Using SST, compress the valve spring and place the two keepers around the valve stem.

SST 09202-70010

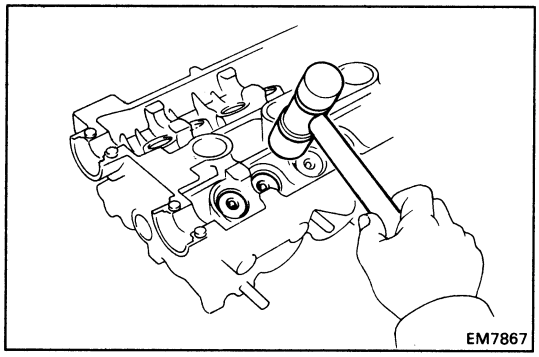

(d) Using a plastic-faced hammer, lightly tap the valve stem tip to assure proper fit.

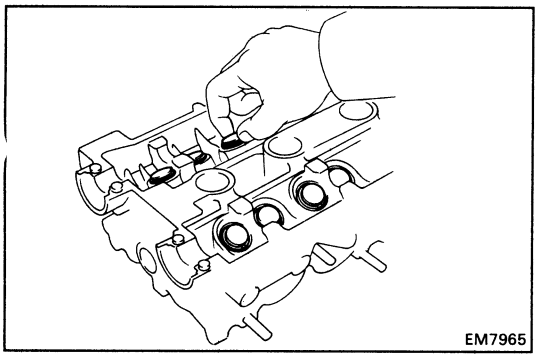

2. INSTALL VALVE LIFTERS AND SHIMS

(a) Install the valve lifter and shim.

(b) Check that the valve lifter rotates smoothly by hand.

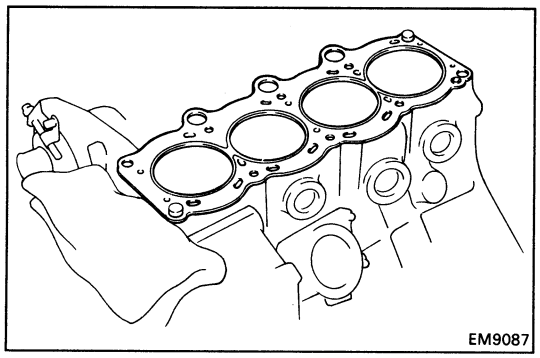
EM9087

INSTALLATION OF CYLINDER HEAD

(See pages EM-61 and 62)

1. INSTALL CYLINDER HEAD

A. Place cylinder head on cylinder block

(a) Place a new cylinder head gasket in position on the cylinder block.

NOTICE: Be careful of the installation direction.

(b) Place the cylinder head in position on the cylinder head gasket.

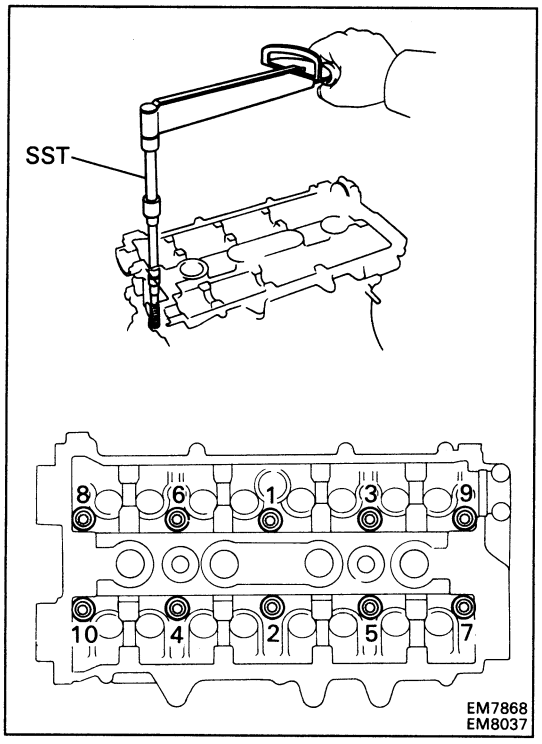

EM7868
EM8037

B. Install cylinder head bolts

HINT:

- The cylinder head bolts are tightened in two progressive steps (steps (b) and (d)).
- If any cylinder head bolt is broken or deformed, replace it.

(a) Apply a light coat of engine oil on the threads and under the heads of the cylinder head bolts.

(b) Using SST, install and uniformly tighten the ten cylinder head bolts in several passes in the sequence shown.

SST 09043-38100

Torque: 500 kg-cm (36 ft-lb, 49 N·m)

If any one of the cylinder head bolts does not meet the torque specification, replace the cylinder head bolt.

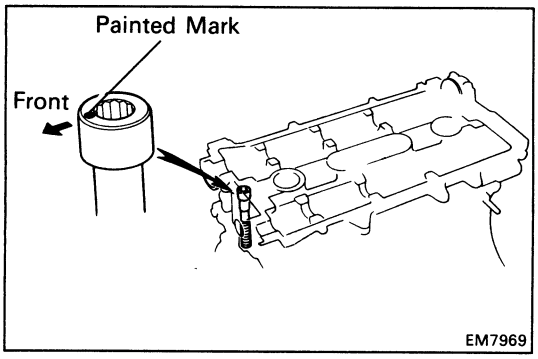

EM7969

(c) Mark the front of the cylinder head bolt head with paint.

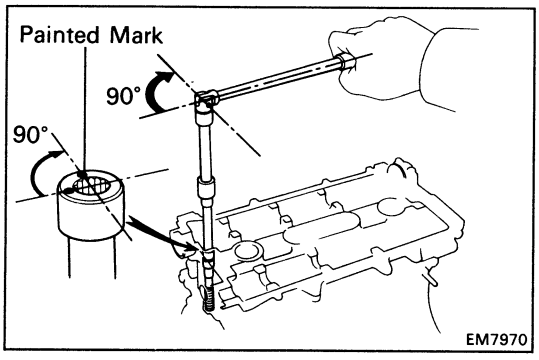

EM7970

(d) Retighten the cylinder head bolts 90° in the numerical order shown.

(e) Check that the painted mark is now at a 90° angle to front.

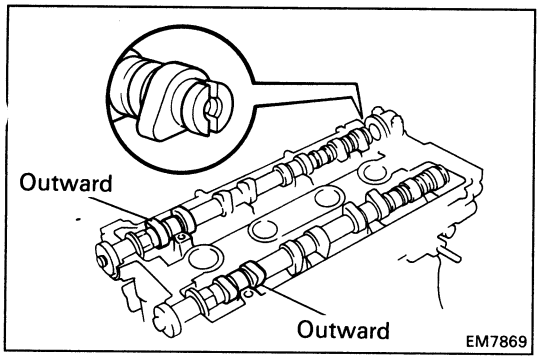

2. **INSTALL CAMSHAFTS**

(a) Place the camshaft on the cylinder head with the No.1 cam lobe facing outward as shown.

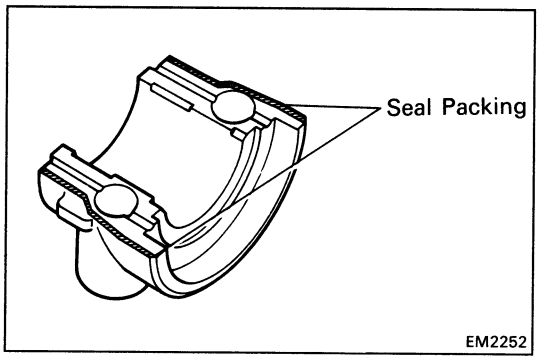

(b) Apply seal packing to the No.1 bearing cap as shown.

Seal packing: Part No. 08826-00080 or equivalent

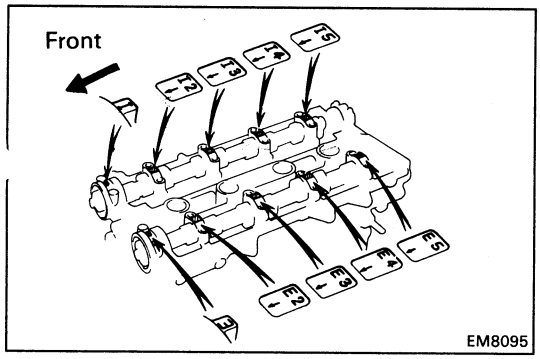

(c) Install the bearing caps in their proper locations.

HINT: Each bearing cap has a number and front mark.

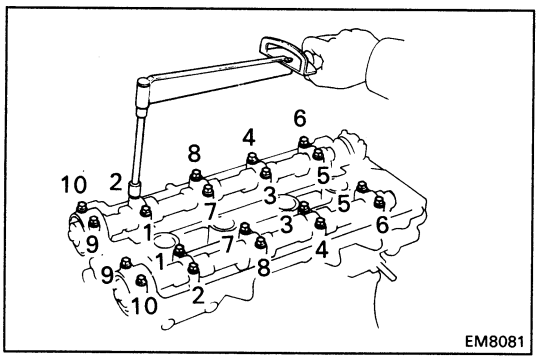

(d) Apply a light coat of engine oil on the threads and under the heads of the bearing cap bolts.

(e) Install and uniformly tighten the ten bearing cap bolts on one side in several passes in the sequence shown.

Torque: 190 kg-cm (14 ft-lb, 19 N·m)

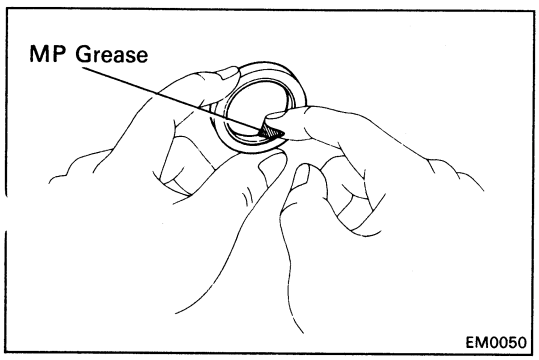

(f) Apply MP grease to a new oil seal lip.

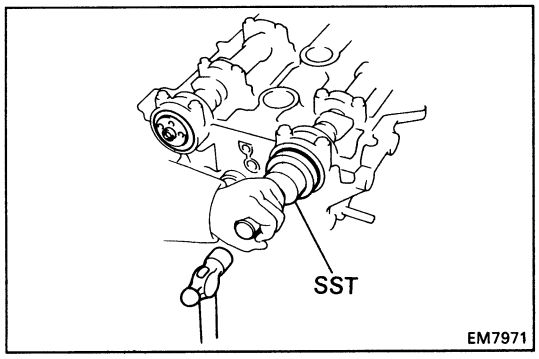

(g) Using SST, tap in the two camshaft oil seals.
SST 09223-50010

3. **ADJUST VALVE CLEARANCE (See page EM-11)**

Turn the camshaft and position the cam lobe upward, check and adjust the valve clearance.

Valve clearance (Cold):
Intake 0.15 – 0.25 mm (0.006 – 0.010 in.)
Exhaust 0.20 – 0.30 mm (0.008 – 0.012 in.)

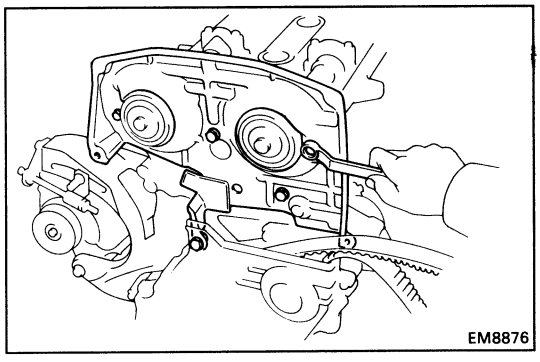

4. **INSTALL NO.3 TIMING BELT COVER**

Install the No.3 belt cover with the five bolts.

Torque: 90 kg-cm (78 in.-lb, 8.8 N·m)

5. **INSTALL NO.1 IDLER PULLEY**
(See step 4 on page EM-35)

6. **INSTALL CAMSHAFT TIMING PULLEYS**
(See steps 9 to 23 on pages EM-36 to 41)

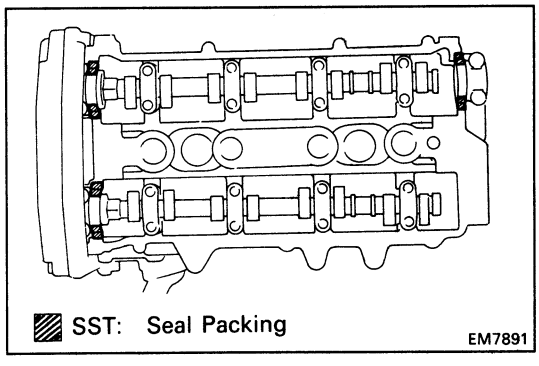

7. **INSTALL CYLINDER HEAD COVER**

(a) Apply seal packing to the cylinder head as shown in the figure.

Seal packing: Part No. 08826-00080 or equivalent

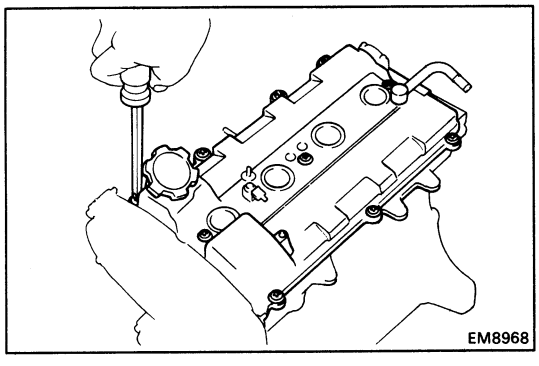

(b) Install the two gaskets to the head cover.

(c) Install the head cover with the twelve seal washers and screws. Uniformly tighten the screw in several passes.

Torque: 25 kg-cm (21 in.-lb, 2.5 N·m)

8. **INSTALL DELIVERY PIPE AND INJECTORS**
(See steps 2 to 5 on pages FI-117 and 118)

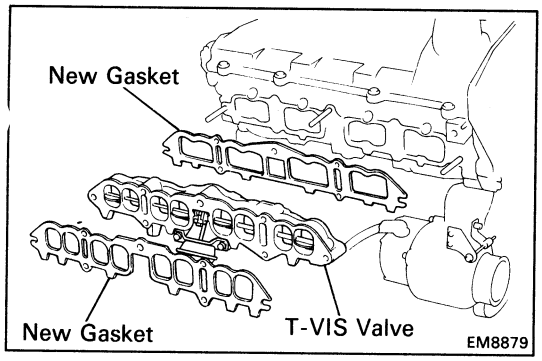

9. INSTALL T-VIS VALVE AND INTAKE MANIFOLD

(a) Place a new gasket, the T-VIS valve and the other new gasket on the cylinder head.

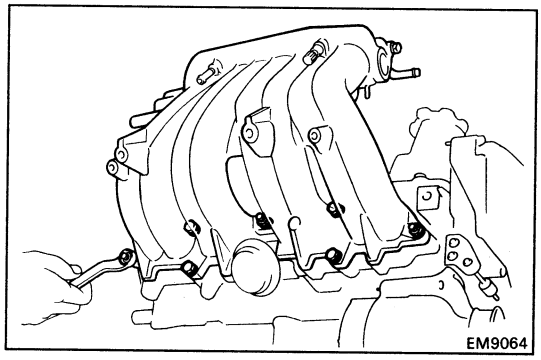

(b) Install the intake manifold with the four bolts and three nuts. Uniformly tighten the bolts and nuts in several passes.

Torque: 195 kg-cm (14 ft-lb, 19 N·m)

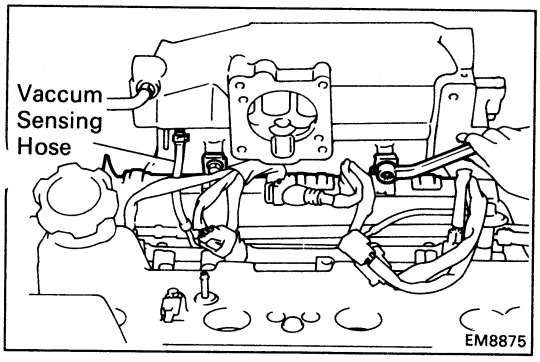

10. INSTALL ENGINE WIRE TO INTAKE MANIFOLD

(a) Install the engine wire clamp to the intake manifold with the two bolts.

(b) Connect the vacuum sensing hose to the intake manifold.

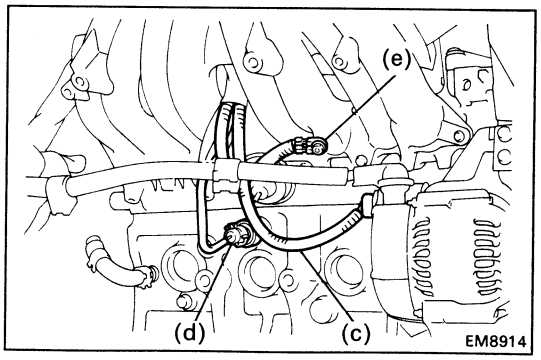

(c) Connect the alternator connector.

(d) Connect the knock sensor connector.

(e) Connect the ground strap with the bolt.

(f) Connect the injector connectors.
(See step 6 on page FI-119)

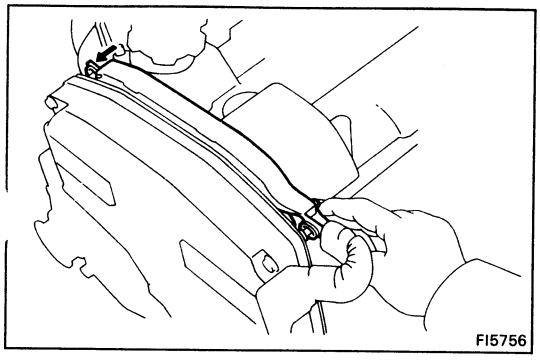

(g) Install the two wire clamps to the mount bolts of the No.2 timing belt cover.

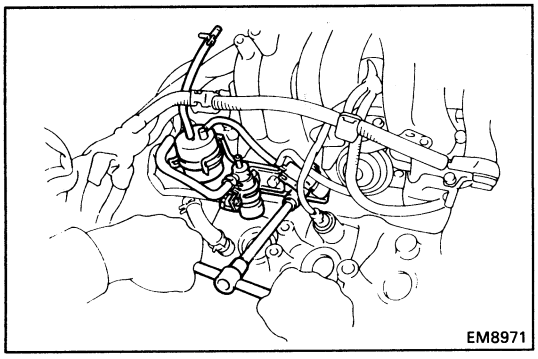

11. INSTALL T-VIS VACUUM TANK, T-VIS VSV, TURBOCHARGING PRESSURE VSV AND BRACKET

(a) Install the T-VIS vacuum tank, T-VIS VSV, turbocharging pressure VSV and bracket assembly with the two bolts.

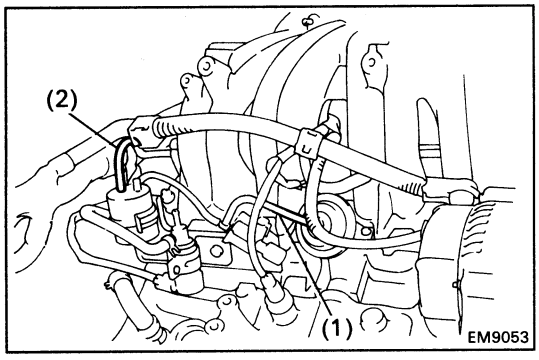

(b) Connect the following hoses:
  (1) Vacuum hose (from T-VIS VSV) from T-VIS actuator
  (2) Vacuum hose (from T-VIS vacuum tank) from intake manifold

(c) Connect the following connectors:
- T-VIS VSV connector
- Turbocharging pressure VSV connector

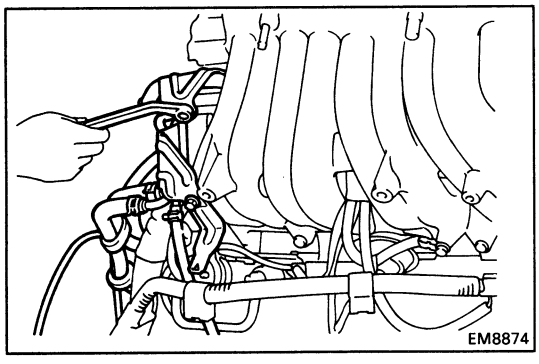

12. INSTALL NO.1 AIR TUBE

(a) Install the air tube and wire bracket with the two bolts.

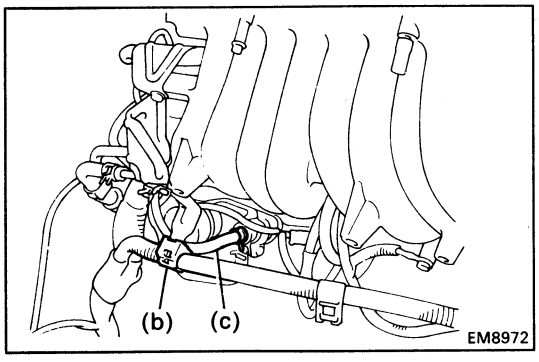

(b) Install the alternator wire clamp to the wire bracket.

(c) Connect the vacuum hose to turbocharging pressure VSV

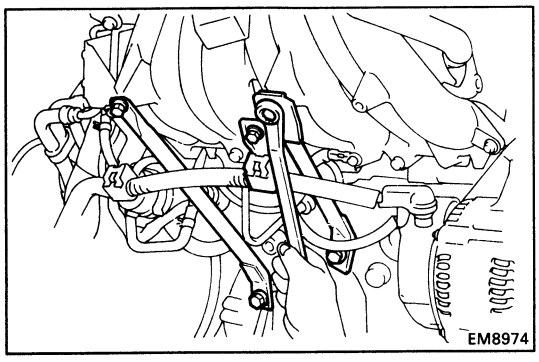

13. INSTALL INTAKE MANIFOLD STAYS

(a) Install the manifold stay with the two bolts. Install the two manifold stays

Torque: 260 kg-cm (19 ft-lb, 25 N·m)

(b) Install the alternator wire clamp to the wire bracket.

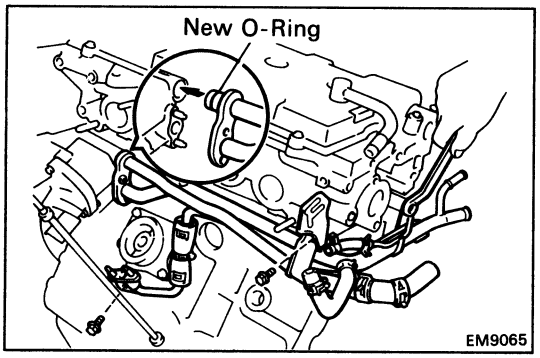

14. INSTALL WATER BY-PASS PIPE

(a) Install a new O-ring to the pipe.

(b) Apply soapy water on the O-ring.

(c) Install a new gasket to the water pump.

(d) Install the water by-pass pipe with the two nuts and two bolts.

Torque (Nuts): 80 kg-cm (69 in.-lb, 7.8 N·m)

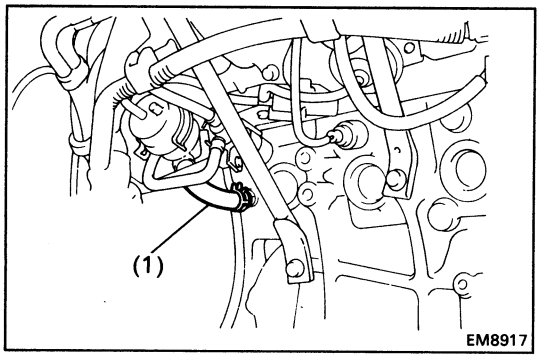

(e) Connect the following hoses:

(1) Water by-pass hose from cylinder block

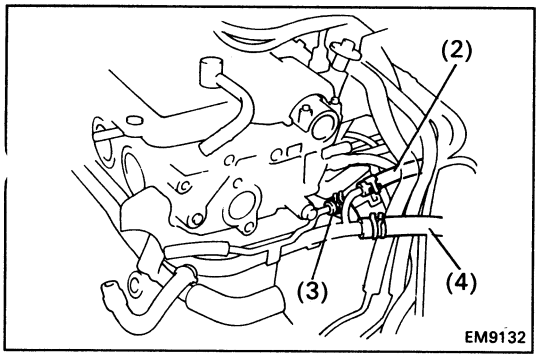

(2) Water by-pass hoses from No.1 air tube

(3) Vacuum hose from turbocharging pressure VSV

(4) Heater water hose

15. INSTALL OIL COOLER
(See steps 2 to 4 on pages LU-21 and 22)

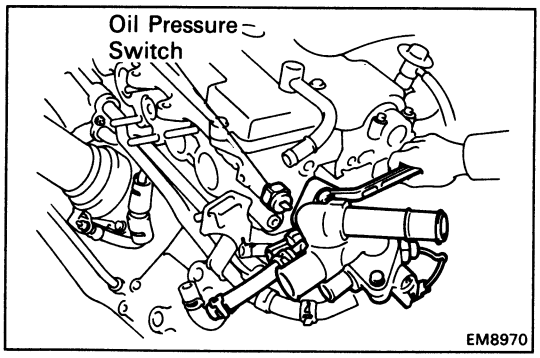

16. INSTALL OIL PRESSURE SWITCH

Apply adhesive to two or three threads.

Adhesive: Part No. 08833-00080, THREE BOND 1324 or equivalent

17. INSTALL WATER OUTLET AND HOUSING

(a) Install a new gasket and the water outlet and housing assembly with the two bolts.

Torque: 400 kg-cm (29 ft-lb, 39 N·m)

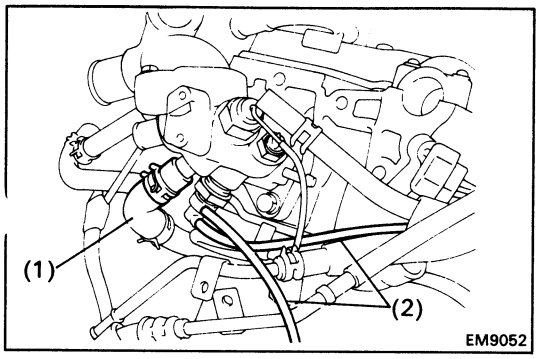

(b) Connect the following hoses:

(1) Water by-pass hose from water by-pass pipe

(2) Two EVAP VSV vacuum hoses

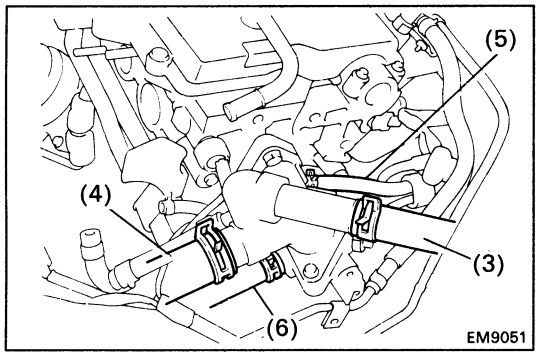

(3) Water filler hose
(4) Radiator hose
(5) Water by-pass pipe hose from ISC valve
(6) Heater water hose

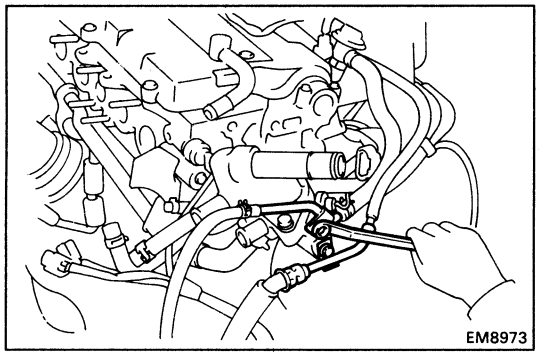

(c) Install the fuel inlet hose with the bolt.
(d) Install the fuel return hose with the bolt.
(e) Connect the following connectors:
- Water temperature sender gauge connector
- Water temperature sensor
- Cold start injector time switch connector

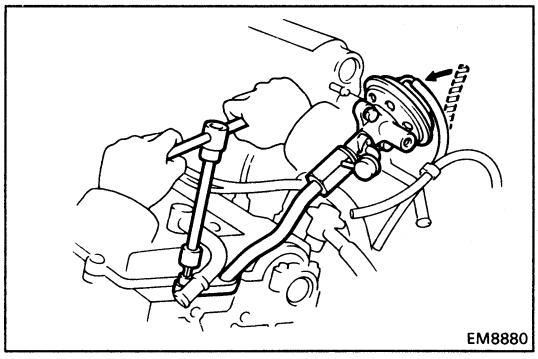

18. INSTALL EGR VALVE AND PIPE

(a) Install two new gaskets, the EGR valve and pipe assembly with the four bolts.

Torque:
Intake manifold side
195 kg-cm (14 ft-lb, 19 N·m)
Cylinder head side
260 kg-cm (19 ft-lb, 25 N·m)

(b) Connect the vacuum hose to the EGR valve.

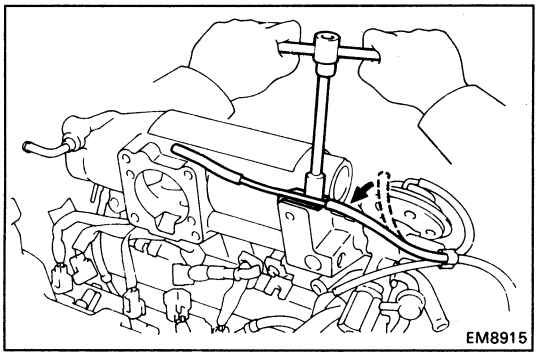

19. INSTALL VACUUM PIPE

(a) Install the vacuum pipe with the bolt.
(b) Connect the vacuum hose to the vacuum pipe.

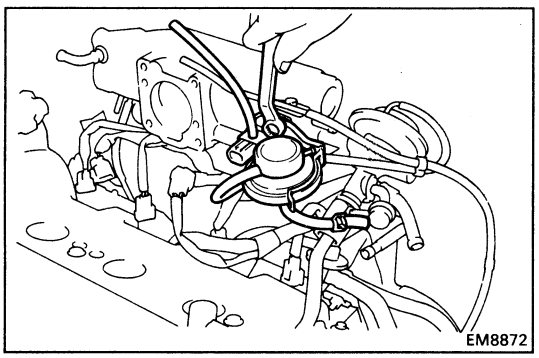

20. INSTALL EGR VACUUM MODULATOR AND VSV

(a) Install the EGR vacuum modulator and VSV assembly with the bolt.

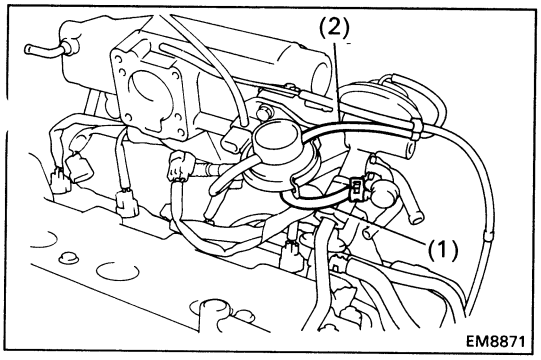

(b) Connect the following hoses:
(1) Vacuum hose from EGR valve
(2) Vacuum hose from EGR vacuum modulator
(c) Connect the EGR VSV connector.

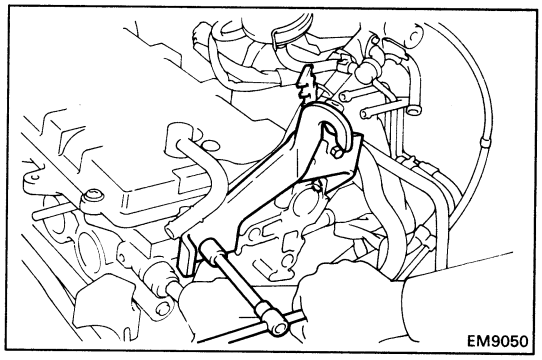

21. INSTALL LH ENGINE HANGER

Install the LH engine hanger with the two bolts.

Torque:

12 mm head bolt	**130 kg-cm (9 ft-lb, 13 N·m)**
14 mm head bolt	**195 kg-cm (14 ft-lb, 19 N·m)**

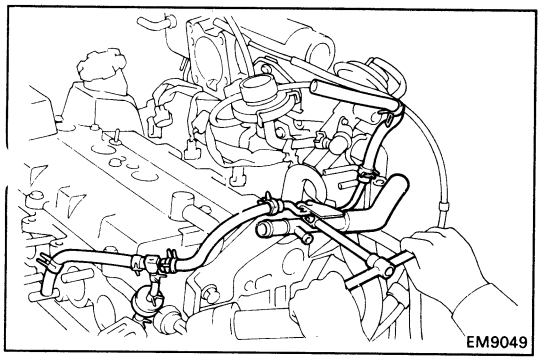

22. INSTALL NO.2 AIR TUBE

(a) Install the No.2 air tube with the bolt.

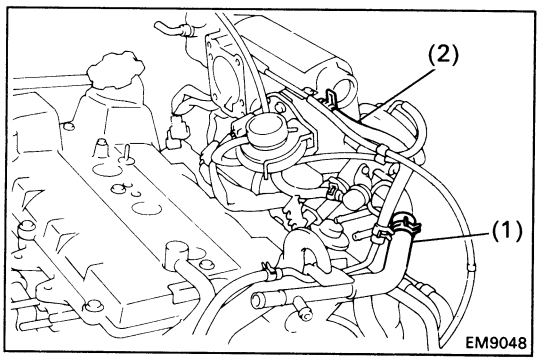

(b) Connect the following hoses:
(1) Air hose from No.1 air tube
(2) Air hose from intake manifold

23. INSTALL DISTRIBUTOR

(See steps 1 to 7 on pages IG-16 and 17)

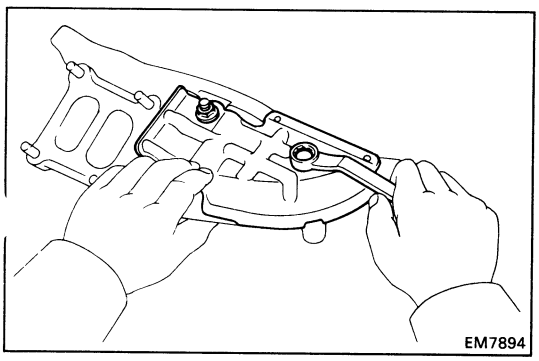

24. INSTALL EXHAUST MANIFOLD

(a) Install the heat insulator with the bolt and nut.

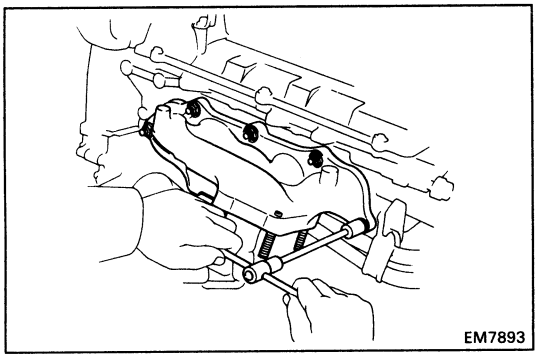

(b) Install a new gasket and the exhaust manifold with the seven nuts. Uniformly tighten the nuts in several passes.

Torque: 530 kg-cm (38 ft-lb, 52 N·m)

25. INSTALL COLD START INJECTOR
(See steps 1 to 3 on page FI-101)

26. INSTALL THROTTLE BODY
(See steps 2, 3 and 4 to 8 on pages FI-138 and 139)

27. INSTALL TURBOCHARGER
(See steps 5 to 11, 17, 18 and 21 on pages TC-16 to 19)

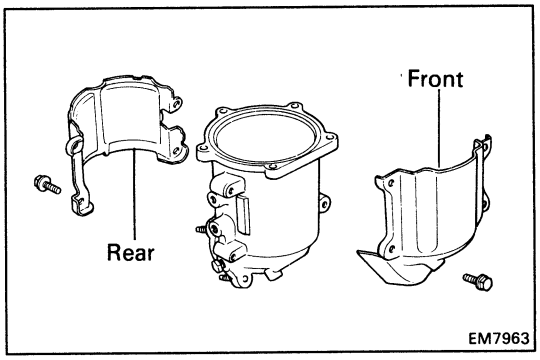

28. INSTALL CATALYTIC CONVERTER

(a) Install the front heat insulator with the five bolts.

(b) Install the rear heat insulator with the four bolts.

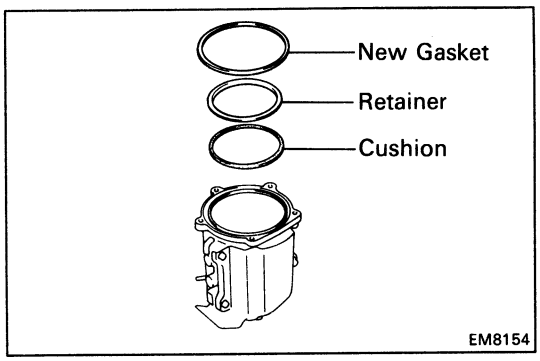

(c) Place the cushion, retainer and a new gasket on the catalytic converter.

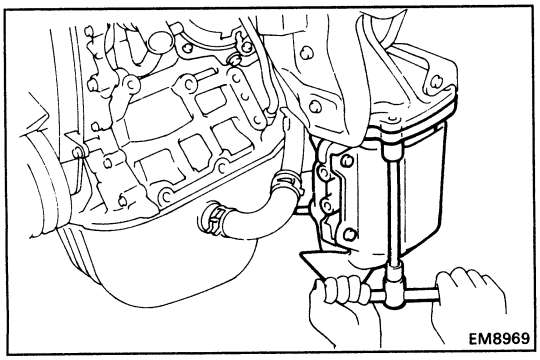

(d) Install the catalytic converter with the three bolts and two nuts.

Torque: 300 kg-cm (22 ft-lb, 29 N·m)

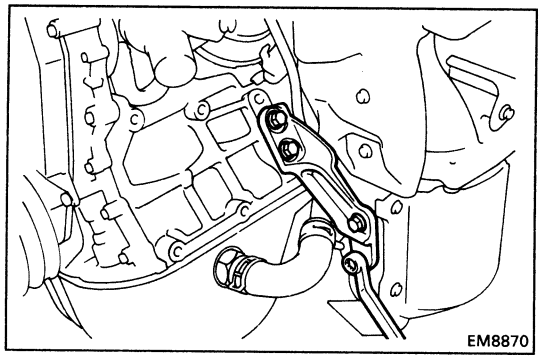

(e) Install the RH converter stay with the four bolts.
Torque: 600 kg-cm (43 ft-lb, 59 N·m)

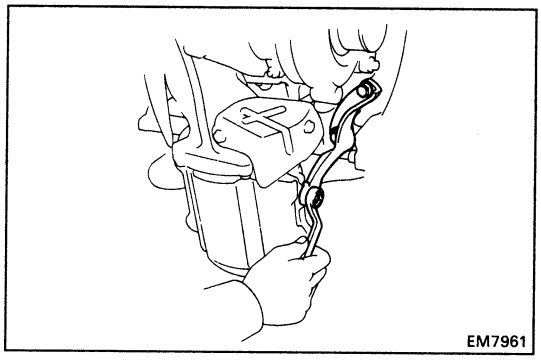

(f) Install the LH converter stay with the three bolts.
Torque: 600 kg-cm (43 ft-lb, 59 N·m)

29. INSTALL FRONT EXHAUST PIPE
(See steps 18 and 19 on pages EM-174 and 175)

30. INSTALL INTERCOOLER
(See steps 2 to 5, 7, 8, 10 and 11 on pages TC-23 to 25)

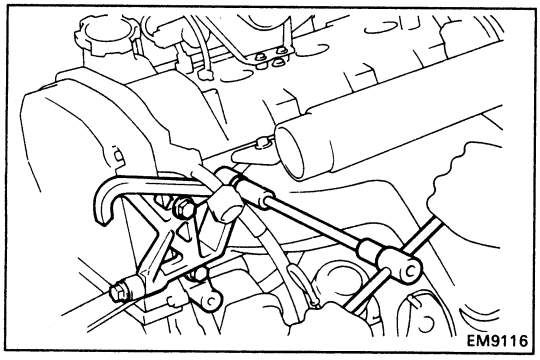

31. INSTALL RH FRONT ENGINE HANGER
Install the engine hanger with the three bolts.
Torque: 400 kg-cm (29 ft-lb, 39 N·m)

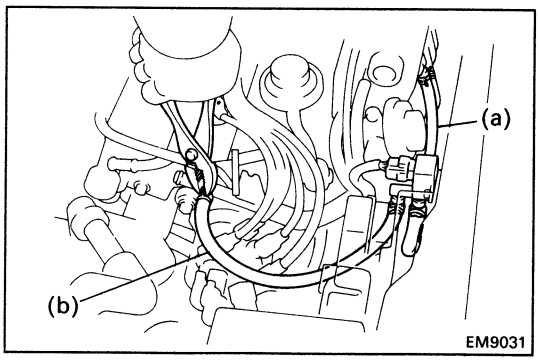

32. CONNECT HOSES
(a) A/C VSV vacuum hose from intake manifold
(b) A/C VSV air hose from No.2 air tube

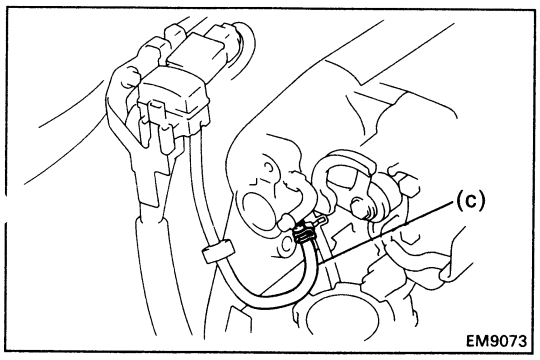

(c) Turbocharging pressure sensor hose from intake manifold

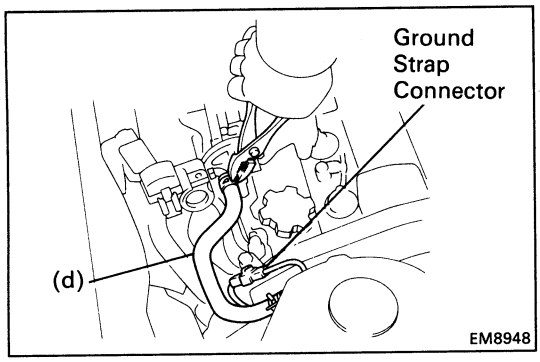

(d) Brake booster vacuum hose from intake manifold

33. **CONNECT GROUND STRAP CONNECTOR**

34. **INSTALL AIR CLEANER CAP**
(See step 40 on pages EM-179)

35. **INSTALL CRUISE CONTROL ACTUATOR (w/ CRUISE CONTROL SYSTEM) AND ACCELERATOR LINKAGE**
(See step 36 on pages EM-178)

36. **INSTALL ACCELERATOR CABLE, AND ADJUST IT**

37. **INSTALL SUSPENSION UPPER BRACE**
(See step 41 on page EM-179)

38. **FILL ENGINE WITH COOLANT (See page CO-7)**
Capacity (w/ Heater):
13.6 liters (14.4 US qts, 12.0 Imp. qts)

39. **START ENGINE AND CHECK FOR LEAKS**

40. **ADJUST IGNITION TIMING**
(See steps 9 to 13 on pages IG-17 and 18)
Ignition timing:
10° BTDC] idle
(w/ Terminals TE1 and E1 connected)

41. **INSTALL ENGINE HOOD SIDE PANELS**

42. **INSTALL ENGINE UNDER COVERS**

43. **PERFORM ROAD TEST**
Check for abnormal noise, shock, slippage, correct shift points and smooth operation.

44. **RECHECK ENGINE COOLANT AND OIL LEVELS**

CYLINDER HEAD (5S-FE)

COMPONENTS

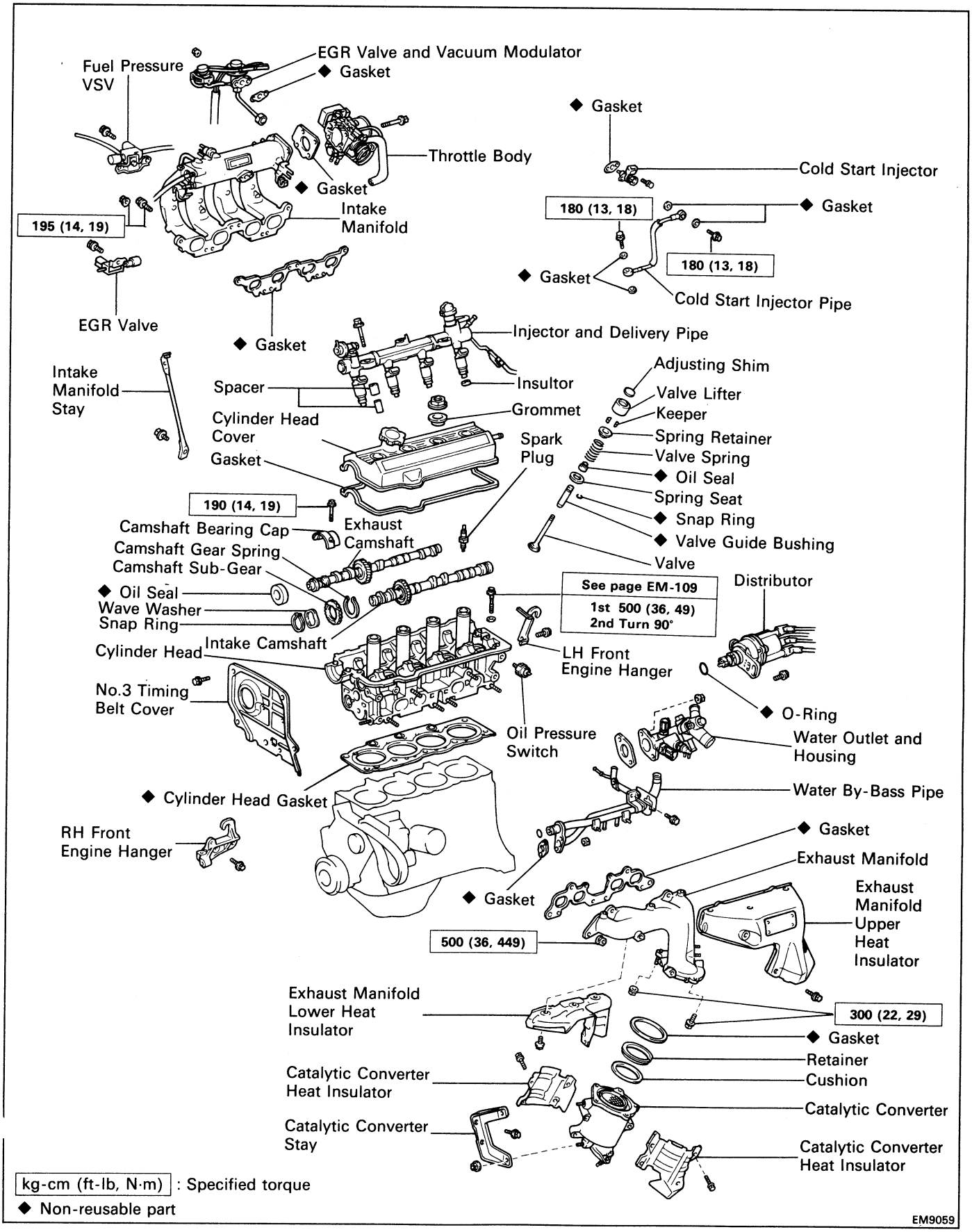

kg-cm (ft-lb, N·m) : Specified torque

◆ Non-reusable part

EM9059

REMOVAL OF CYLINDER HEAD

(See page EM-97)

1. DISCONNECT CABLE FROM NEGATIVE TERMINAL OF BATTERY

   CAUTION: Work must be started after approx. 20 seconds or longer from the time the ignition switch is turned to the "LOCK" position and the negative (–) terminal cable is disconnected from the battery.

2. DRAIN ENGINE COOLANT (See page CO-6)

3. REMOVE ENGINE UNDER COVERS

4. REMOVE ENGINE HOOD SIDE PANELS

5. REMOVE SUSPENSION UPPER BRACE

6. (A/T)
   DISCONNECT THROTTLE CABLE FROM THROTTLE BODY

7. DISCONNECT ACCELERATOR CABLE FROM THROTTLE BODY

8. REMOVE CRUISE CONTROL ACTUATOR (w/ CRUISE CONTROL SYSTEM) AND ACCELERATOR LINKAGE (See step 11 on page EM-182)

9. REMOVE AIR CLEANER CAP
   (See step 9 on page EM-182)

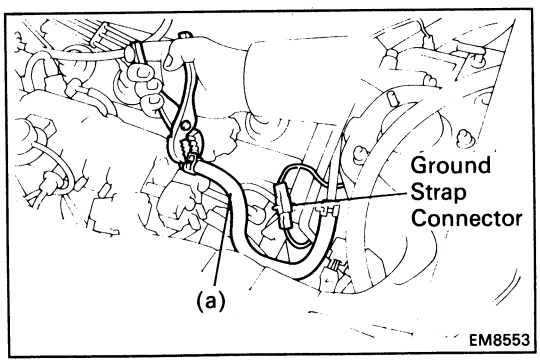

10. DISCONNECT GROUND STRAP CONNECTOR

11. DISCONNECT VACUUM HOSES

    (a) Brake booster vacuum hose from intake manifold

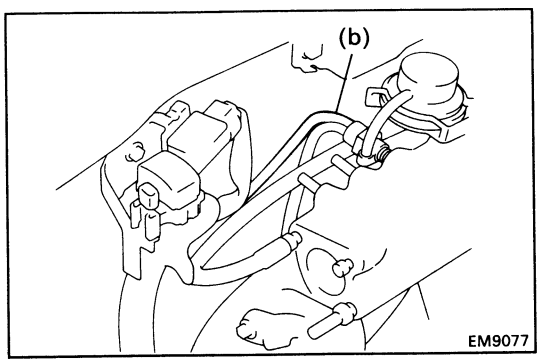

(b) Vacuum sensor hose from intake manifold

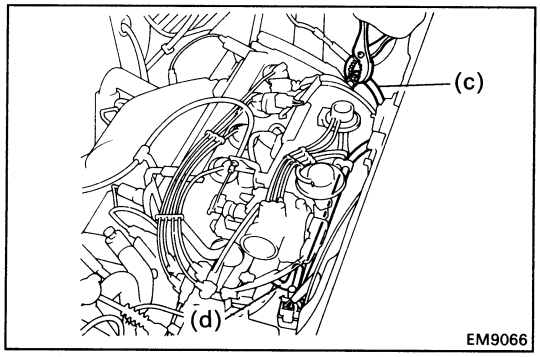

(c) A/C VSV vacuum hose from intake manifold
(d) A/C VSV air hose from ISC valve

12. REMOVE DISTRIBUTOR (See pages IG-19 and 20)

13. REMOVE FRONT EXHAUST PIPE (See step 29 on page EM-187)

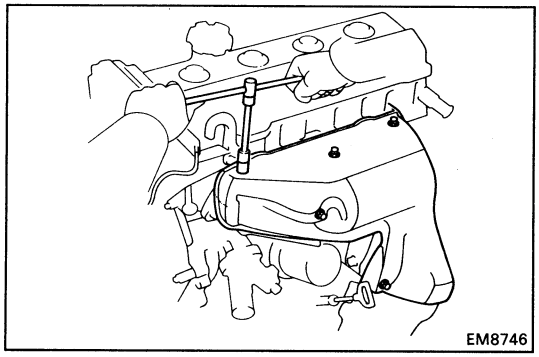

14. REMOVE EXHAUST MANIFOLD AND CATALYTIC CONVERTER ASSEMBLY

(a) Disconnect the oxygen sensor (main) connector.
(b) (CALIF. only)
Disconnect the sub-oxygen sensor connector.
(c) Remove the six bolts and manifold upper heat insulator.

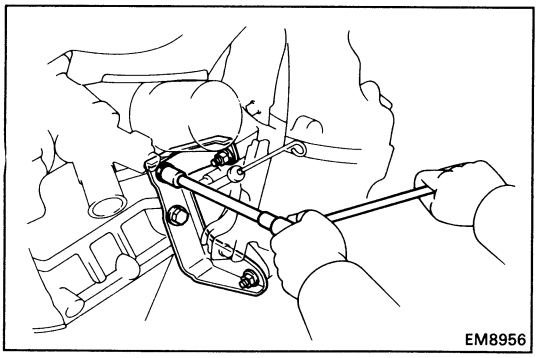

(d) Remove the two bolts, two nuts and catalytic converter stay.

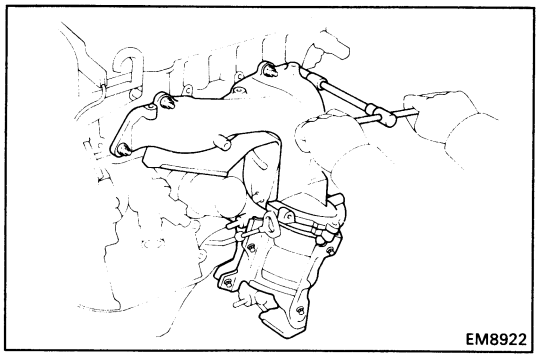

(e) Remove the six nuts, the exhaust manifold and catalytic converter assembly.

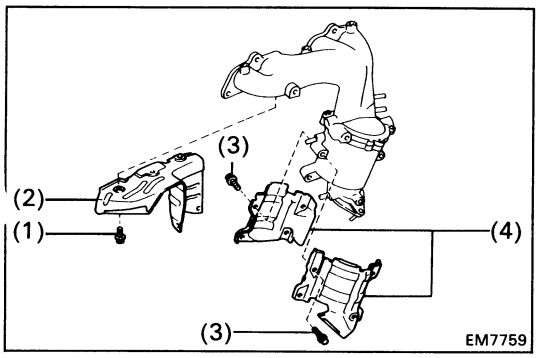

15. SEPARATE EXHAUST MANIFOLD AND CATALYTIC CONVERTER

Remove the following parts:

(1) Five bolts
(2) Manifold lower heat insulator
(3) Eight bolts
(4) Two catalytic converter heat insulators

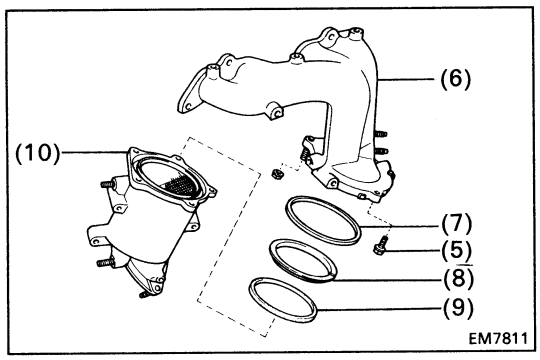

(5) Three bolts and two nuts
(6) Exhaust manifold
(7) Gasket
(8) Retainer
(9) Cushion
(10) Catalytic converter

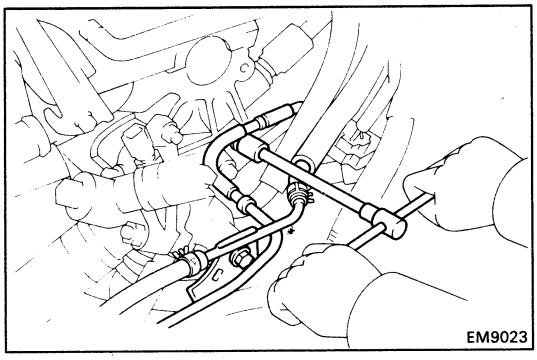

16. REMOVE WATER OUTLET AND HOUSING

(a) Disconnect the following connectors:
- Water temperature sender gauge connector
- Water temperature sensor connector
- Cold start injector time switch connector

(b) Remove the two bolts, and disconnect the fuel inlet hose (with the fuel return tube) from the water outlet and cylinder head.

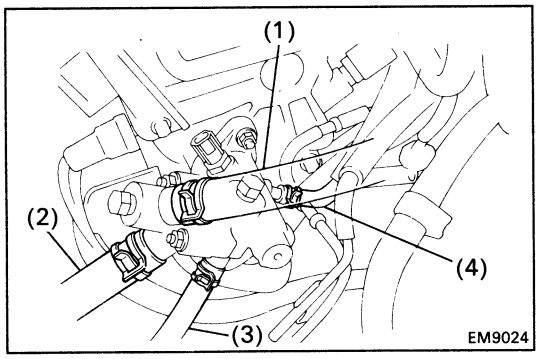

(c) Disconnect the following hoses:
(1) Water filler hose
(2) Radiator hose
(3) Heater water hose
(4) ISC water by-pass hose

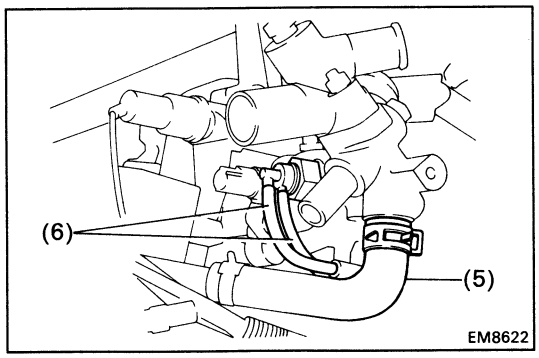

(5) Water by-pass pipe hose
(6) Two EVAP BVSV vacuum hoses

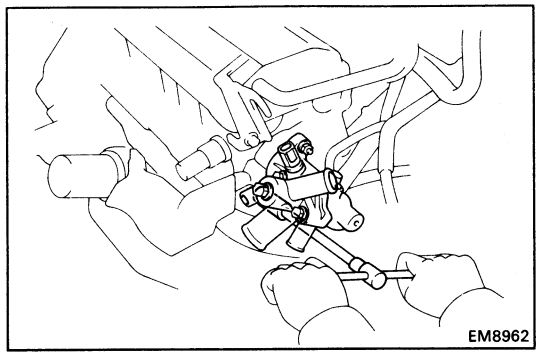

(d) Remove the two bolts, the water outlet, housing assembly and gasket.

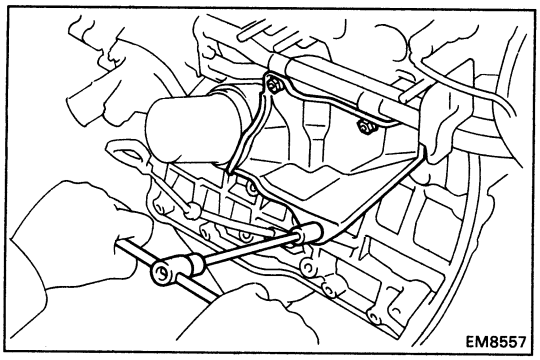

17. REMOVE WATER BY-PASS PIPE

(a) Remove the bolt, two nut and oil cooler heat protector

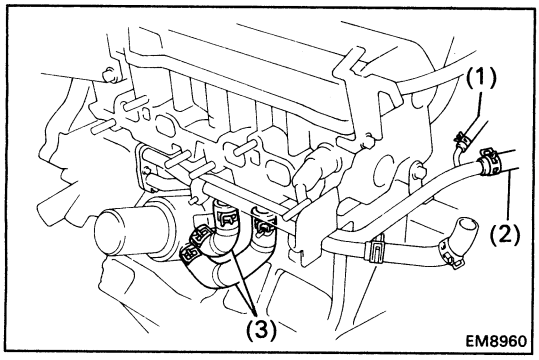

(b) Disconnect the following hoses:
(1) ISC water by-pass hose
(2) Heater water hose
(3) Two oil cooler water by-pass hoses

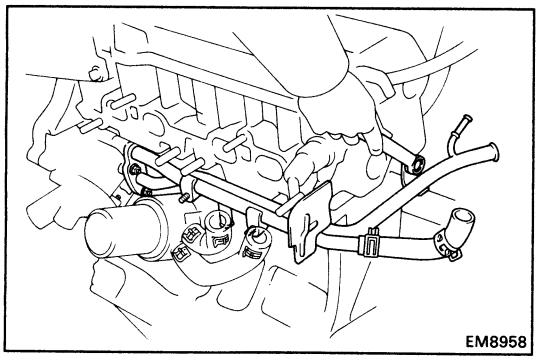

(c) Remove the two bolts, two nuts, water by-pass pipe and gasket.
(d) Remove the O-ring from the water by-pass hose.

18. REMOVE THROTTLE BODY
(See steps 7 to 10 on page FI-143)

19. REMOVE COLD START INJECTOR PIPE
(See step 3 on page FI-102)

20. REMOVE COLD START INJECTOR
(See steps 2 and 4 on pages FI-102 and 103)

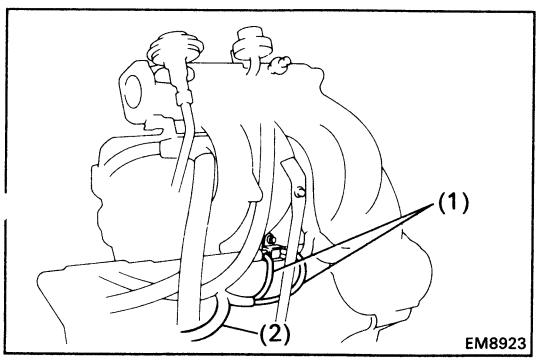

21. REMOVE EGR VALVE AND VACUUM MODULATOR

(a) (CALIF. only)
Disconnect EGR gas temperature sensor connector.
(b) Remove the following hoses:
(1) Two vacuum hoses from EGR VSV
(2) Vacuum hose from charcoal canister

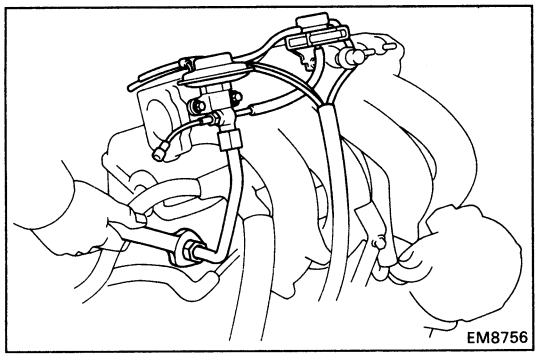

(c) Loosen the union nut of the EGR pipe, and remove two bolts, the EGR valve, vacuum modulator, vacuum hoses assembly and gasket.

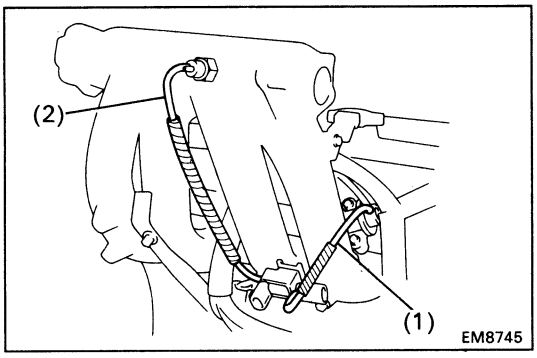

22. REMOVE FUEL PRESSURE VSV

(a) Disconnect the VSV connector.

(b) Disconnect the following hoses:

(1) Vacuum hose from fuel pressure regulator

(2) Vacuum hose from intake manifold

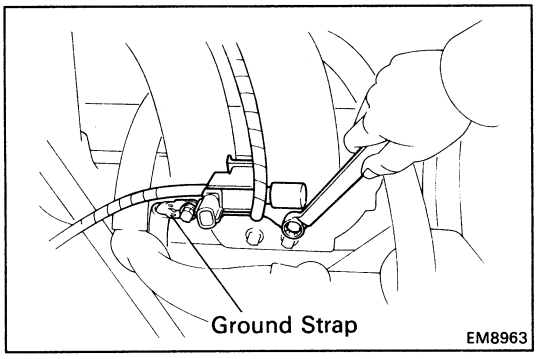

(c) Remove the two bolts and VSV. Disconnect the ground strap.

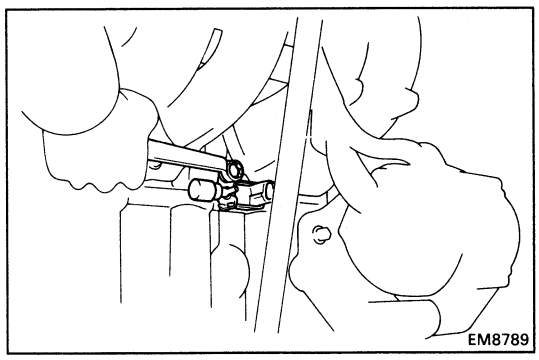

23. REMOVE EGR VSV

(a) Disconnect the VSV connector.

(b) Remove the bolt and VSV.

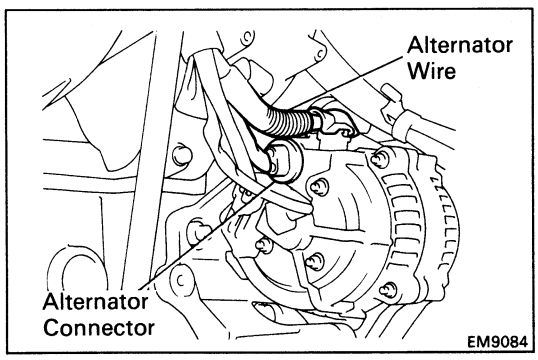

24. REMOVE INTAKE MANIFOLD

(a) Disconnect the alternator connector and wire.

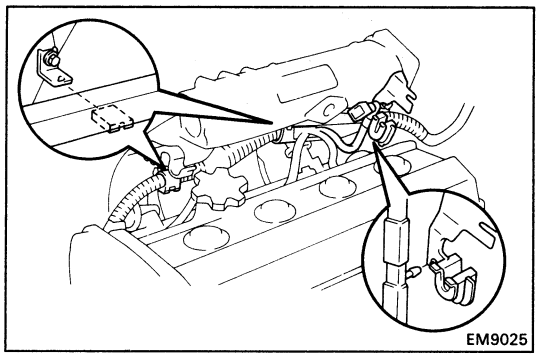

(b) Disconnect the two wire clamps from the wire brackets.

(c) Disconnect the clip of the engine wire from the LH accelerator bracket.

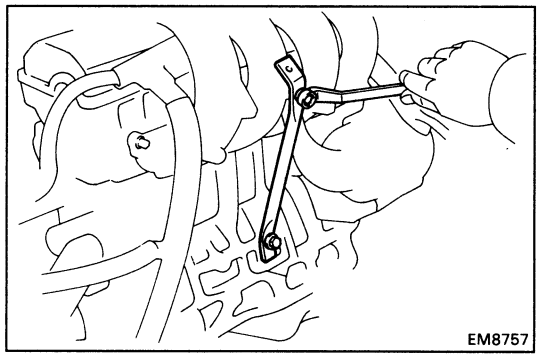

(d) Remove the two bolts and manifold stay.

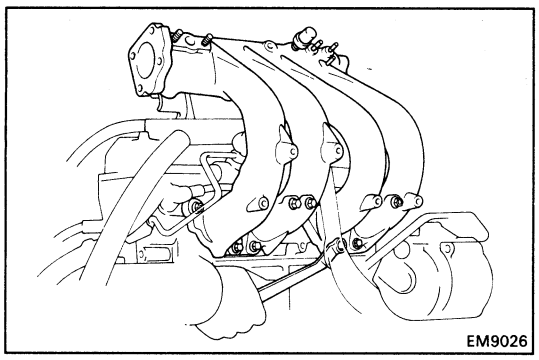

(e) Remove the six bolts, two nuts, intake manifold and gasket.

25. REMOVE DELIVERY PIPE AND INJECTORS
(See steps 7 to 10 and 12 on pages FI-122 and 123)

26. REMOVE CAMSHAFT TIMING PULLEY
(See steps 9 to 17 on pages EM-48 to 50)

27. REMOVE NO.1 IDLER PULLEY AND TENSION SPRING
(See step 22 on page EM-52)

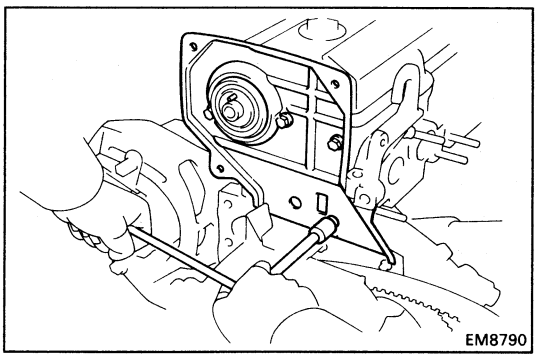

28. REMOVE NO.3 TIMING BELT COVER

Remove the four bolts and timing belt cover.

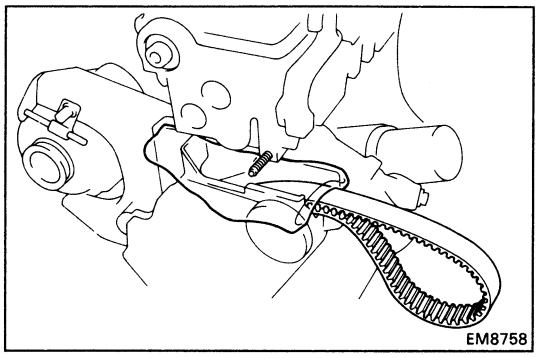

NOTICE:

- **Support the timing belt, so the meshing of the crankshaft timing pulley and timing belt does not shift.**
- **Be careful not to drop anything inside the timing belt cover.**
- **Do not allow the belt to come into contact with oil, water or dust.**

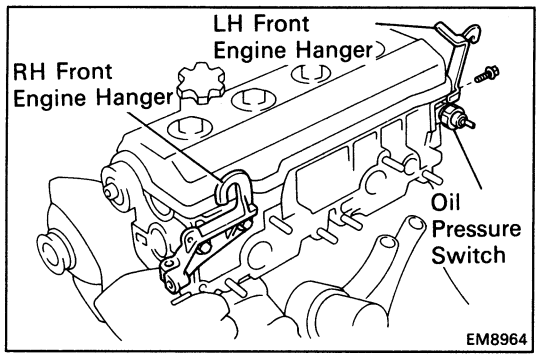

29. REMOVE RH FRONT ENGINE HANGER

Remove the two bolts and engine hanger.

30. REMOVE LH FRONT ENGINE HANGER

Remove the bolt and engine hanger.

31. REMOVE OIL PRESSURE SWITCH

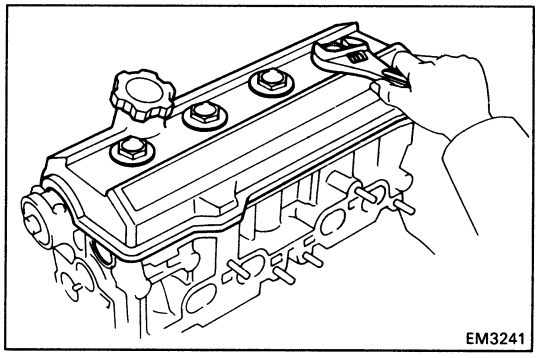

32. REMOVE CYLINDER HEAD COVER

Remove the four nuts, grommets, head cover and gasket.

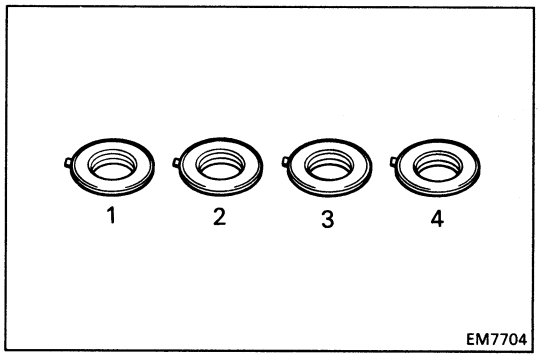

HINT: Arrange the grommets in correct order so that they can be reinstalled into their original positions. This minimizes any possibility of oil leakage from reuse grommets.

33. REMOVE CAMSHAFTS

NOTICE: Since the thrust clearance of the camshaft is small, the camshaft must be kept level while it is being removed. If the camshaft is not kept level, the portion of the cylinder head receiving the shaft thrust may crack or be damaged, causing the camshaft to seize or break. To avoid this, the following steps should be carried out.

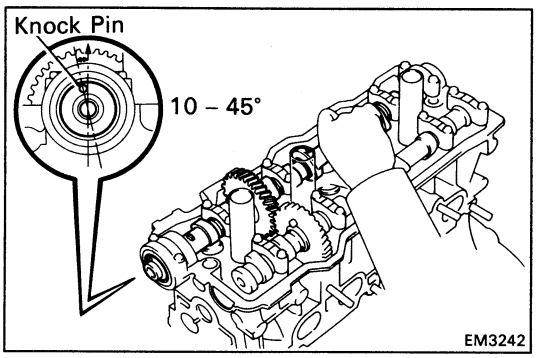

A. Remove exhaust camshaft

(a) Set the knock pin of the intake camshaft at 10 – 45° BTDC of camshaft angle.

HINT: The above angle allows No.2 and No.4 cylinder cam lobes of the exhaust camshaft to push their valve lifters evenly.

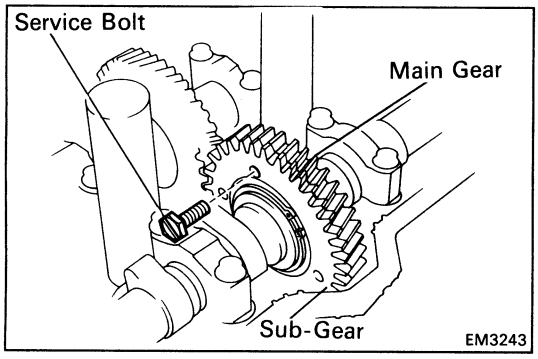

(b) Secure the exhaust camshaft sub-gear to drive gear with a service bolt.

Recommended service bolt:

Thread diameter	6 mm
Thread pitch	1.0 mm
Bolt length	16 – 20 mm (0.63 – 0.79 in.)

HINT: When removing the camshaft, make certain that the torsional spring force of the sub-gear has been eliminated by the above operation.

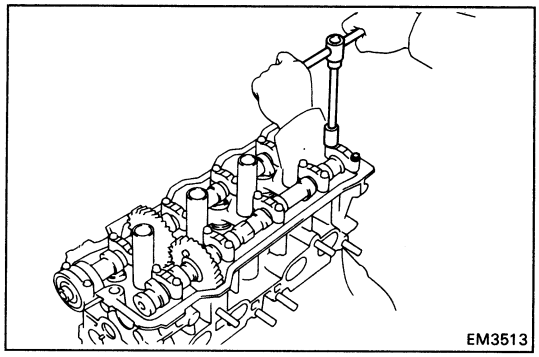

(c) Remove the two bolts and rear bearing cap.

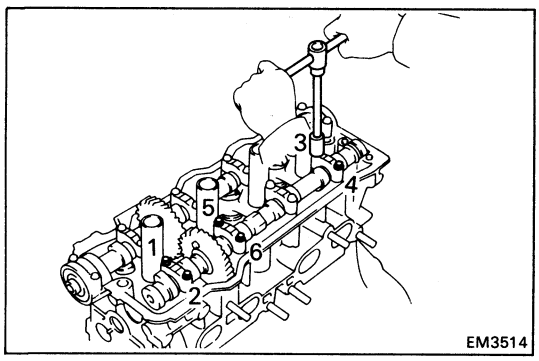

(d) Uniformly loosen and remove the six bolts on the No.1, No.2 and No.4 bearing cap in several passes in the sequence shown.

NOTICE: Do not remove the No.3 bearing cap bolts at this stage.

(e) Remove the No.1, No.2 and No.4 bearing caps.

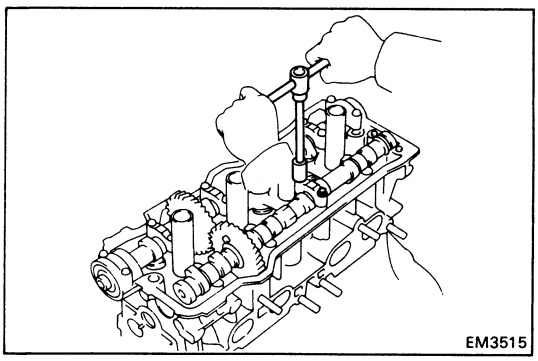

(f) Alternately loosen and remove the two bolts on the No.3 bearing cap.

HINT:

- As two No.3 bearing cap bolts are loosened, check that the camshaft is being lifted out straight and level.
- If the camshaft is not being lifted out straight and level, retighten the two No.3 bearing cap bolts. Then reverse the order of above steps from (f) to (a) and reset the knock pin of the intake camshaft at 10 – 45° BTDC, and repeat steps from (b) to (f) once again.

NOTICE: Do not pry on or attempt to force the camshaft with a tool or other objects.

(g) Remove the No.3 bearing cap and exhaust camshaft.

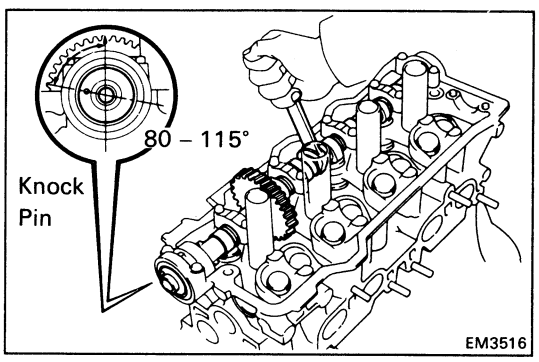

B. Remove intake camshaft

(a) Set the knock pin of the intake camshaft at 80 – 115° BTDC of camshaft angle.

HINT: The above angle allows the No.1 and No.3 cylinder cam lobes of intake camshaft to push their valve lifters evenly.

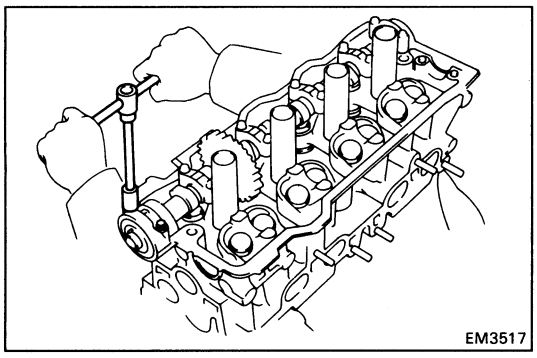
EM3517

(b) Remove the two bolts, front bearing cap and oil seal.

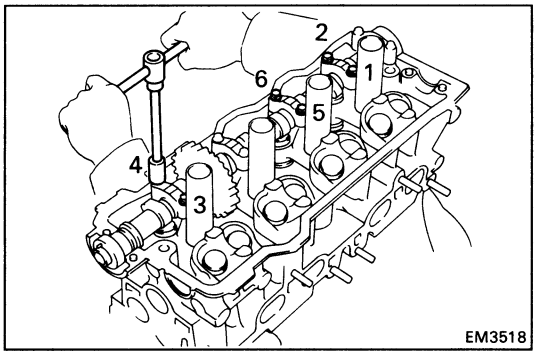

EM3518

(c) Uniformly loosen and remove the bolts on the No.1, No.3 and No.4 bearing cap in several passes in the sequence shown.

NOTICE: Do not remove the No.2 bearing cap bolts at this stage.

(d) Remove the No.1, No.3 and No.4 bearing caps.

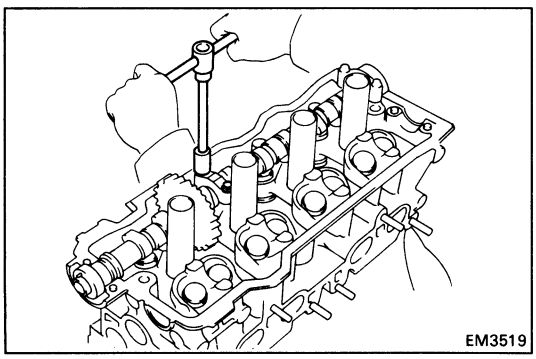
EM3519

(e) Alternately loosen and remove the two bolts on the No.2 bearing cap.

HINT:

- As two No.2 bearing cap bolts are loosened, check that the camshaft is being lifted out straight and level, after breaking the adhesion on the front bearing cap.
- If the camshaft is not being lifted out straight and level, retighten the two No.2 bearing cap bolts. Reverse the order of above steps from (e) to (a) and reset the knock pin of the intake camshaft at 80 – 115° BTDC, and repeat steps from (b) to (e) once again.

NOTICE: Do not pry on or attempt to force the camshaft with a tool or other objects.

(f) Remove the No.2 bearing cap and camshaft.

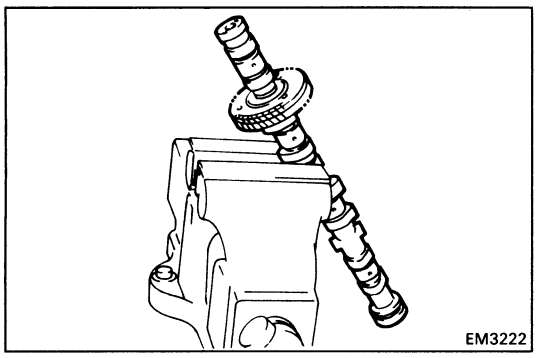
EM3222

34. DISASSEMBLE EXHAUST CAMSHAFT

(a) Mount the hexagonal wrench head portion of the camshaft in a vise.

NOTICE: Be careful not to damage the camshaft.

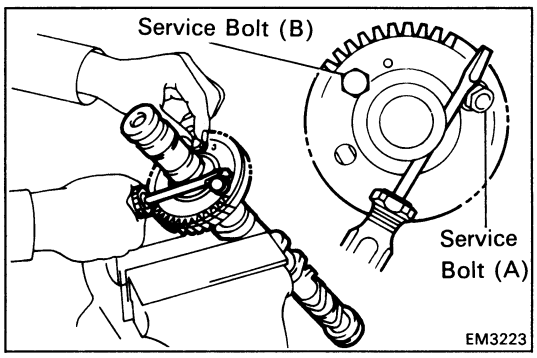

EM3223

(b) Insert a service bolt (A) into the service hole of the camshaft sub-gear.

(c) Using a screwdriver, turn the sub-gear clockwise, and remove the service bolt (B).

NOTICE: Be careful not to damage the camshaft.

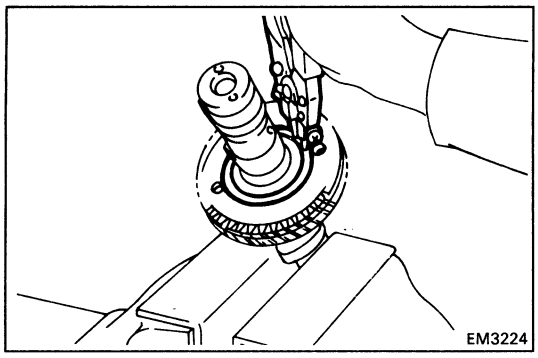

(d) Using snap ring pliers, remove the snap ring.

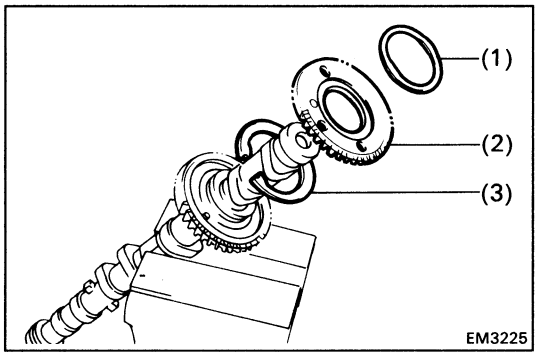

(e) Remove the following parts:
(1) Wave washer
(2) Camshaft sub-gear
(3) Camshaft gear spring

35. REMOVE CYLINDER HEAD

(a) Using SST, uniformly loosen and remove the ten cylinder head bolts in several passes in the sequence shown.

SST 09011-38121

NOTICE: Head warpage or cracking could result from removing bolts in the incorrect order.

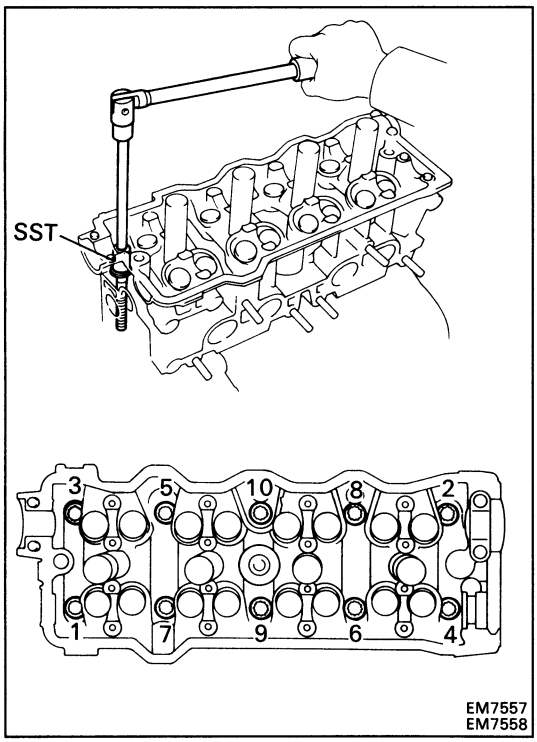

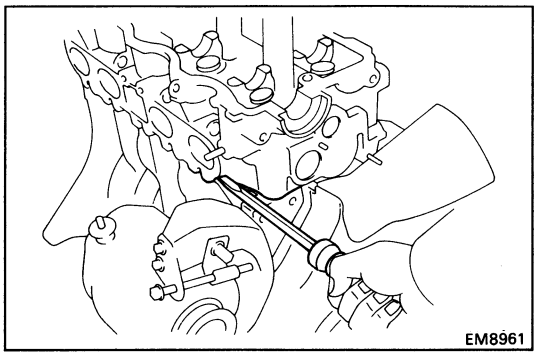

(b) Lift the cylinder head from the dowels on the cylinder block, and place the cylinder head on wooden blocks on a bench.

HINT: If the cylinder head is difficult to lift off, pry between the cylinder head and cylinder block with a screwdriver.

NOTICE: Be careful not to damage the cylinder head and cylinder block surfaces of the cylinder head.

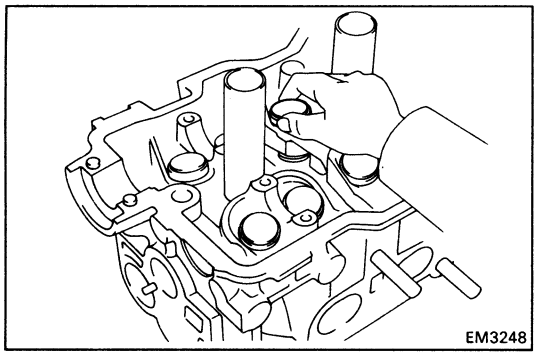

DISASSEMBLY OF CYLINDER HEAD

(See page EM-97)

1. REMOVE VALVE LIFTERS AND SHIMS

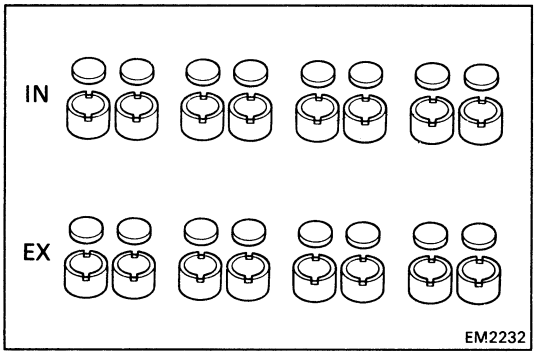

HINT: Arrange the valve lifters and shims in correct order.

2. REMOVE VALVES

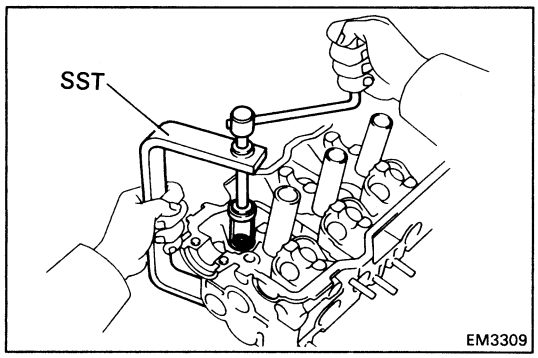

(a) Using SST, compress the valve spring and remove the two keepers.

SST 09202-70010

(b) Remove the spring retainer, valve spring, valve and spring seat.

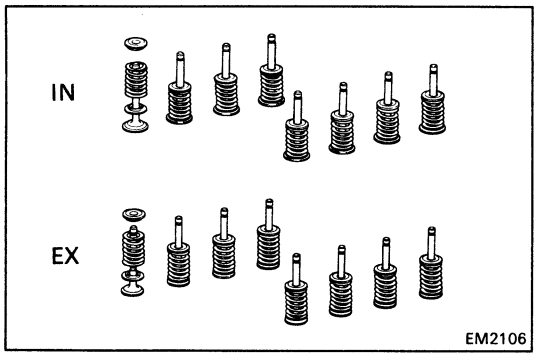

HINT: Arrange the valves, valve springs, spring seats and spring retainers in correct order.

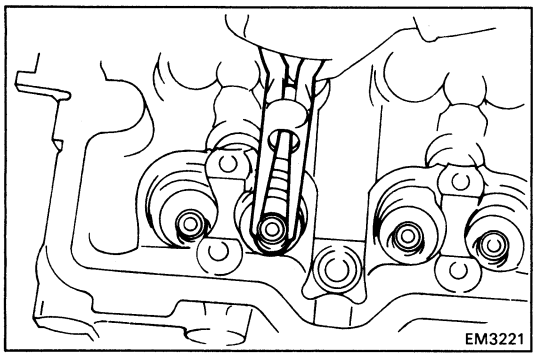

(c) Using needle-nose pliers, remove the oil seal.

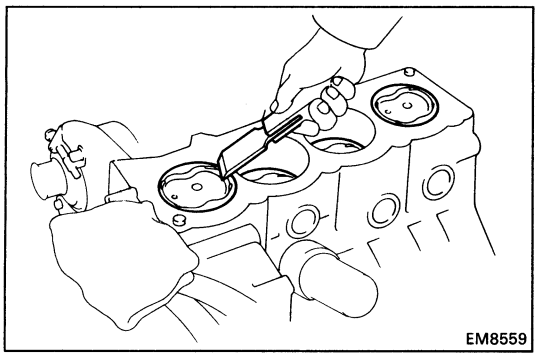

INSPECTION, CLEANING AND REPAIR OF CYLINDER HEAD COMPONENTS

1. CLEAN TOP SURFACES OF PISTONS AND CYLINDER BLOCK

(a) Turn the crankshaft, and bring each piston to top dead center (TDC). Using a gasket scraper, remove all the carbon from the piston top surface.

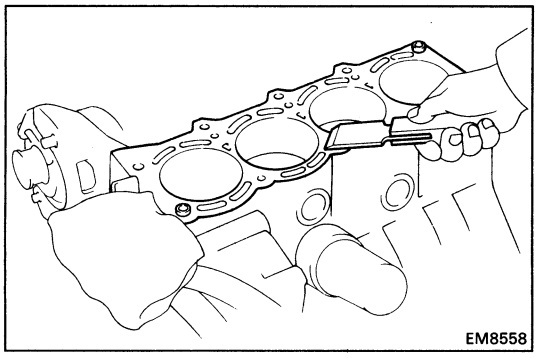

(b) Using a gasket scraper, remove all the gasket material from the top surface of the cylinder block.

(c) Using compressed air, blow carbon and oil from the bolt holes.

CAUTION: Protect your eyes when using high-com

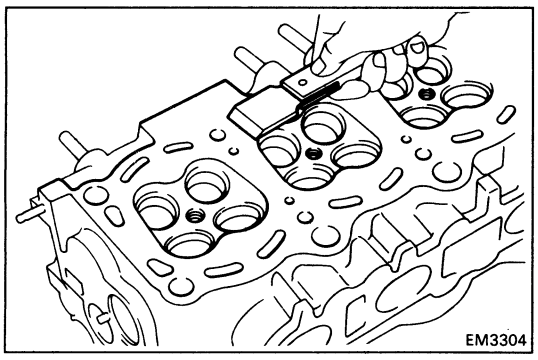

2. CLEAN CYLINDER HEAD

A. Remove gasket material

Using a gasket scraper, remove all the gasket material from the cylinder block surface.

NOTICE: Be careful not to scratch the cylinder block contact surface.

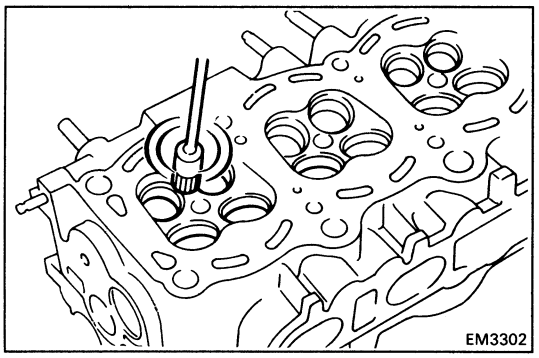

B. Clean combustion chambers

Using a wire brush, remove all the carbon from the combustion chambers.

NOTICE: Be careful not to scratch the cylinder block contact surface.

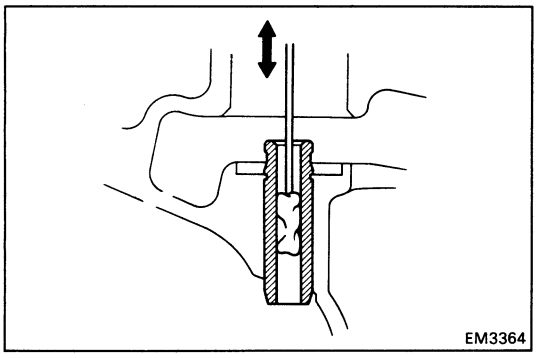

C. Clean valve guide bushings

Using a valve guide bushing brush and solvent, clean all the guide bushings.

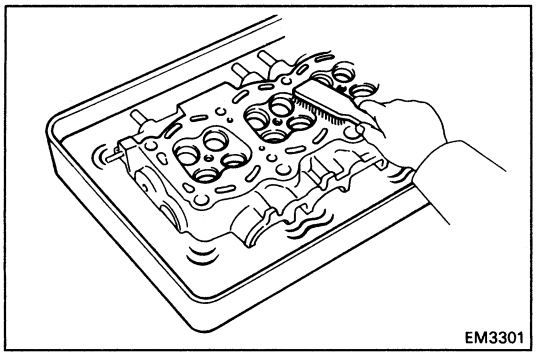

D. Clean cylinder head

Using a soft brush and solvent, thoroughly clean the cylinder head.

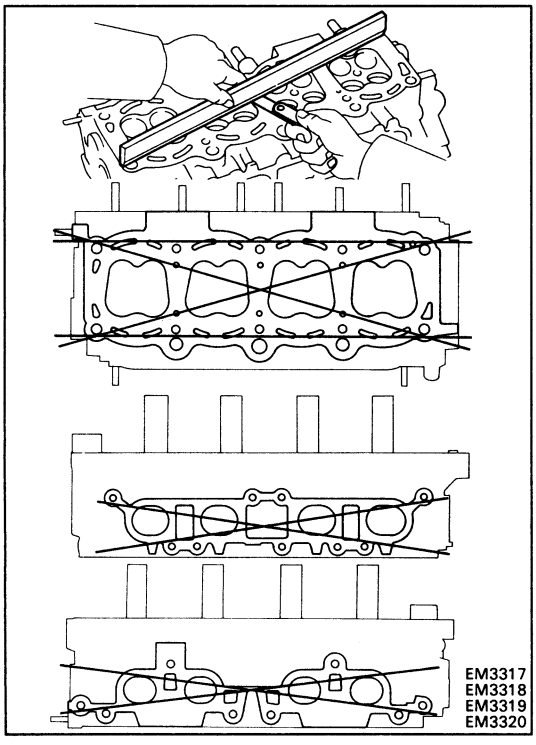

3. INSPECT CYLINDER HEAD

A. Inspect for flatness

Using precision straight edge and feeler gauge, measure the surfaces contacting the cylinder block manifolds for warpage.

Maximum warpage:

Cylinder block side	**0.05 mm (0.0020 in.)**
Manifold side	**0.08 mm (0.0031 in.)**

If warpage is greater than maximum, replace the cylinder head.

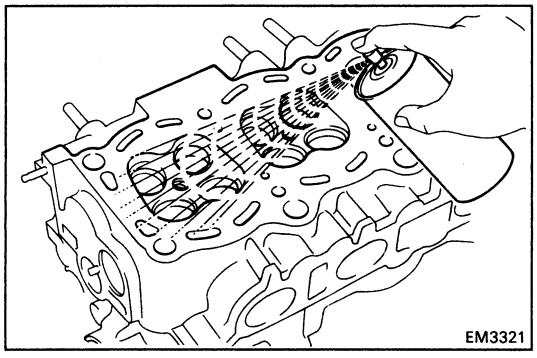

B. Inspect for cracks

Using a dye penetrant, check the combustion chamber, intake ports, exhaust ports and cylinder block surface for cracks.

If cracked, replace the cylinder head.

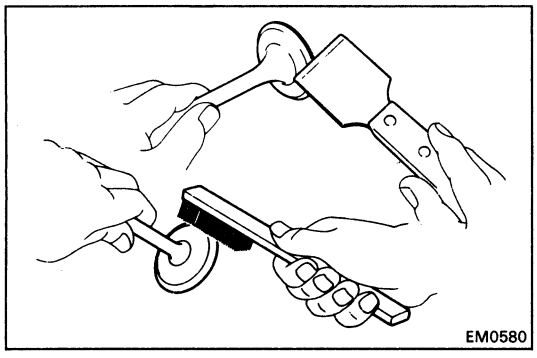

4. CLEAN VALVES

(a) Using a gasket scraper, chip off any carbon from the valve head.

(b) Using a wire brush, thoroughly clean the valve.

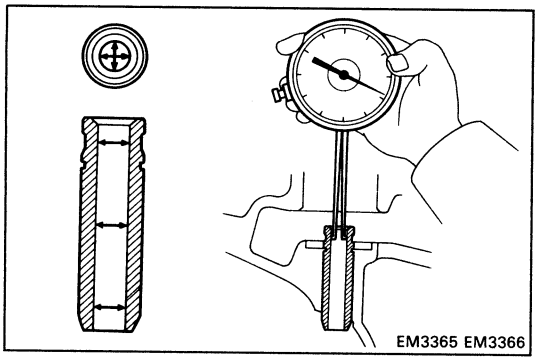

5. INSPECT VALVE STEMS AND GUIDE BUSHINGS

(a) Using a caliper gauge, measure the inside diameter of the guide bushing.

Bushing inside diameter:
6.010 – 6.030 mm (0.2366 – 0.2374 in.)

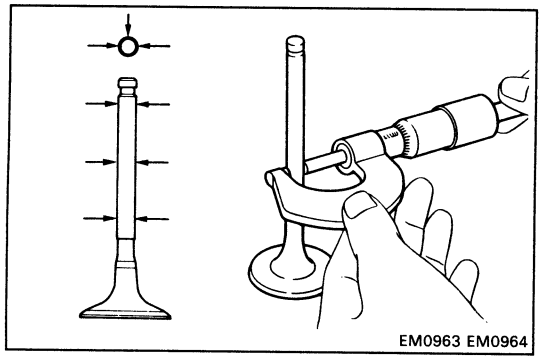

(b) Using a micrometer, measure the diameter of the valve stem.

Valve stem diameter:

Intake	**5.970 – 5.985 mm (0.2350 – 0.2356 in.)**
Exhaust	**5.965 – 5.980 mm (0.2348 – 0.2354 in.)**

(c) Subtract the valve stem diameter measurement from the guide bushing inside diameter measurement.

Standard oil clearance:

Intake	**0.025 – 0.060 mm (0.0010 – 0.0024 in.)**
Exhaust	**0.030 – 0.065 mm (0.0012 – 0.0026 in.)**

Maximum oil clearance:

Intake	**0.08 mm (0.0031 in.)**
Exhaust	**0.10 mm (0.0039 in.)**

If the clearance is greater than maximum, replace the valve and guide bushing.

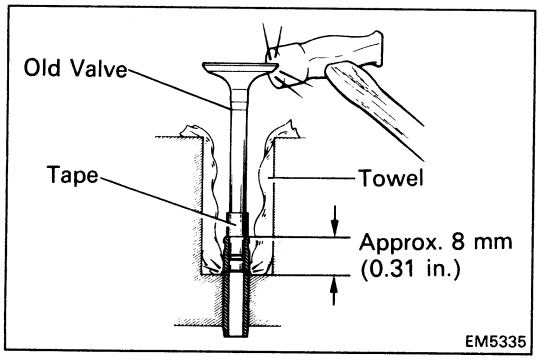

6. IF NECESSARY, REPLACE VALVE GUIDE BUSHINGS

(a) (w/ Snap Ring)
Insert an old valve wrapped with tape into the valve guide bushing, and break off the valve guide bushing by hitting it with a hammer. Remove the snap ring.

HINT: Wrap the tape approx. 8 mm (0.31 in.) from the valve stem end.

NOTICE: Be careful not damage to the valve lifter hole.

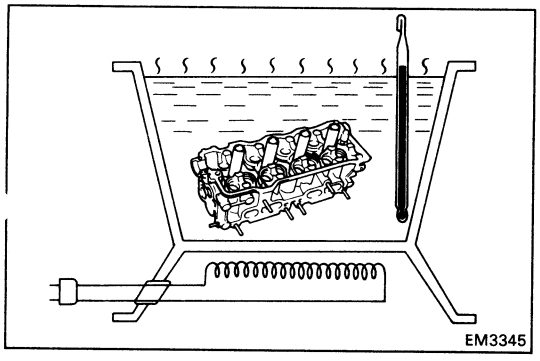

(b) Gradually heat the cylinder head to 80 – 100°C (176 – 212°F).

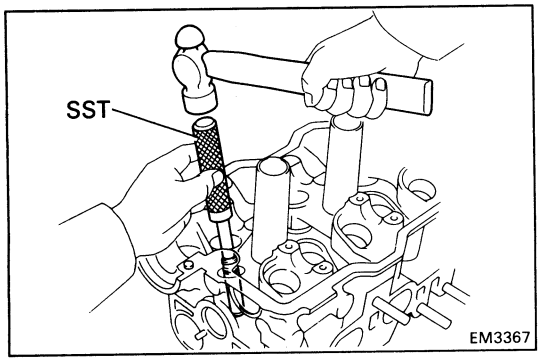

(c) Using SST and a hammer, tap out the guide bushing.

SST 09201-70010

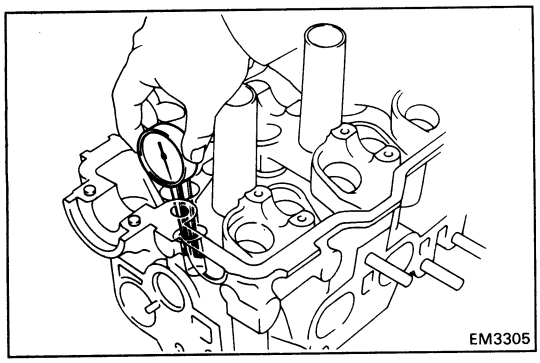

(d) Using a caliper gauge, measure the bushing bore diameter of the cylinder head.

Both intake and exhaust

Bushing bore diameter mm (in.)	Bushing size
11.000 – 11.027 (0.4331 – 0.4342)	Use STD
11.050 – 11.077 (0.4350 – 0.4361)	Use O/S 0.05

(e) Select a new guide bushing (STD size or O/S 0.05).

If the bushing bore diameter of the cylinder head is greater than 11.027 mm (0.4341 in.), machine the bushing bore to the following dimension:

11.050 – 11.077 mm (0.4350 – 0.4361 in.)

If the bushing bore diameter of the cylinder head is greater than 11.077 mm (0.4361 in.), replace the cylinder head.

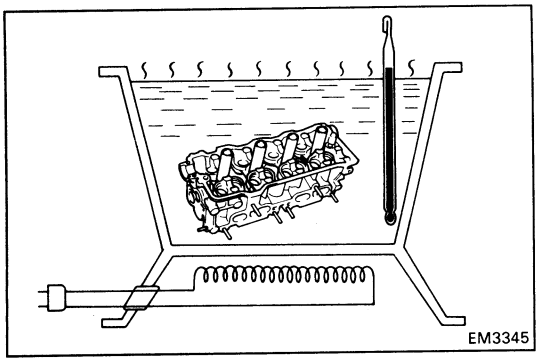

(f) Gradually heat the cylinder head to 80 – 100[C (176 – 212°F).

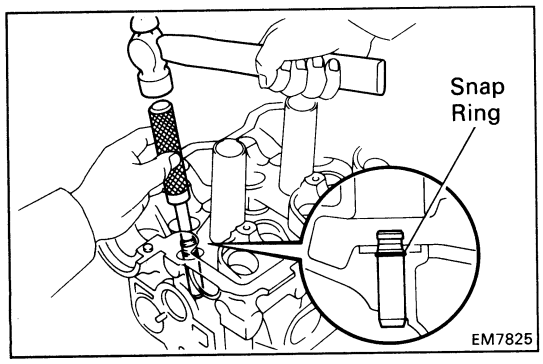

(g) Using SST and a hammer, tap in a new guide bushing until the snap ring makes contact with the cylinder head.

SST 09201-70010

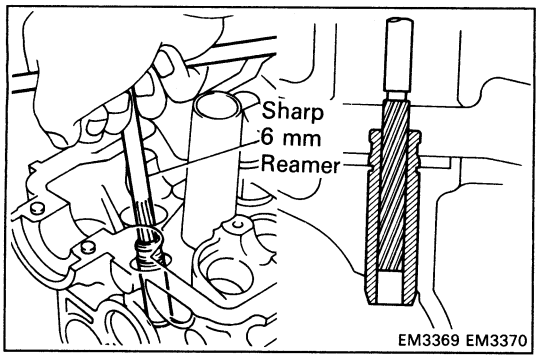

(h) Using a sharp 6 mm reamer, ream the guide bushing to obtain the standard specified clearance (See page EM-111) between the guide bushing and valve stem.

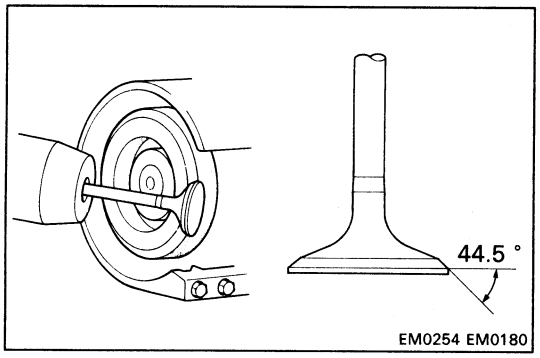

7. INSPECT AND GRIND VALVES

(a) Grind the valve enough to remove pits and carbon.

(b) Check that the valve is ground to the correct valve face angle.

Valve face angle: 44.5°

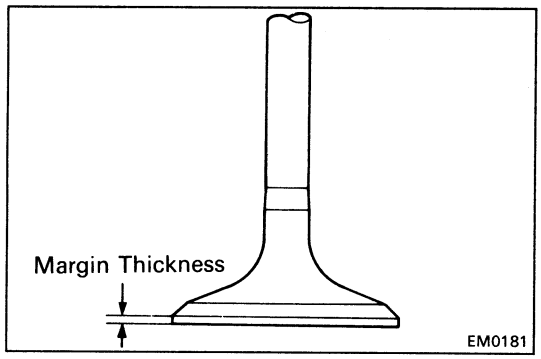

(c) Check the valve head margin thickness.

Standard margin thickness: 0.8 – 1.2 mm (0.031 – 0.047 in.)

Minimum margin thickness: 0.5 mm (0.020 in.)

If the margin thickness is less than minimum, replace the valve.

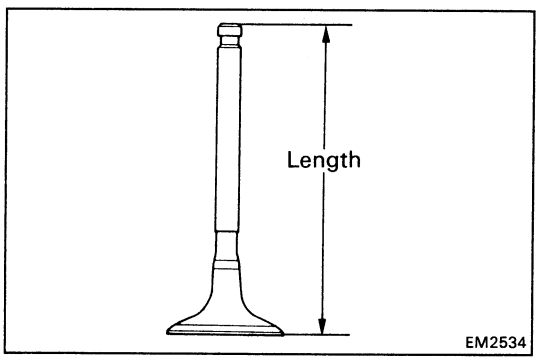

(d) Check the valve overall length.

Standard overall length:

Intake 100.60 mm (3.9606 in.)
Exhaust 100.45 mm (3.9547 in.)

Minimum overall length:

Intake 100.1 mm (3.941 in.)
Exhaust 100.0 mm (3.937 in.)

If the overall length is less than minimum, replace the valve.

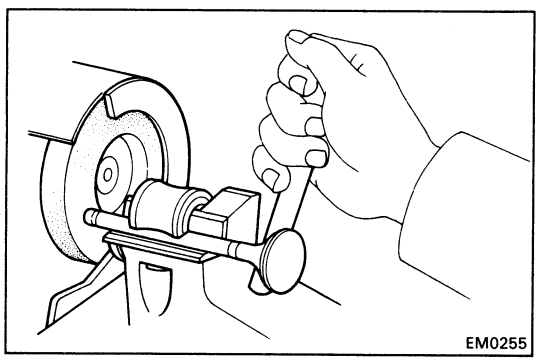

(e) Check the surface of the valve stem tip for wear.

If the valve stem tip is worn, resurface the tip with a grinder or replace the valve.

NOTICE: Do not grind off more than the minimum.

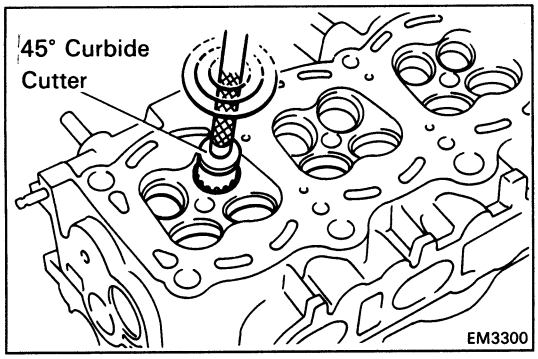

8. INSPECT AND CLEAN VALVE SEATS

(a) Using a 45° carbide cutter, resurface the valve seats. Remove only enough metal to clean the seats.

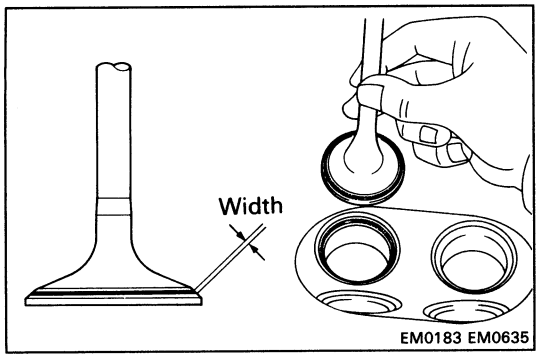

(b) Check the valve seating position.

Apply a thin coat of prussian blue (or white lead) to the valve face. Lightly press to the valve against the seat. Do not rotate the valve.

(c) Check the valve face and seat for the following:

- If blue appears 360° around the face, the valve is concentric. If not, replace the valve.
- If blue appears 360° around the valve seat, the guide and face are concentric. If not, resurface the seat.
- Check that the seat contact is in the middle of the valve face with the following width:

1.0 – 1.4 mm (0.039 – 0.055 in.)

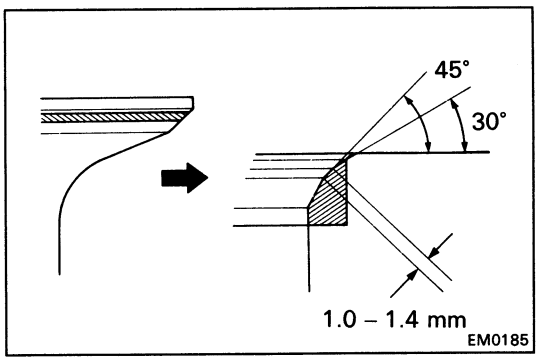

If not, correct the valve seats as follows:

(1) If the seating is too high on the valve face, use 30° and 45° cutters to correct the seat.

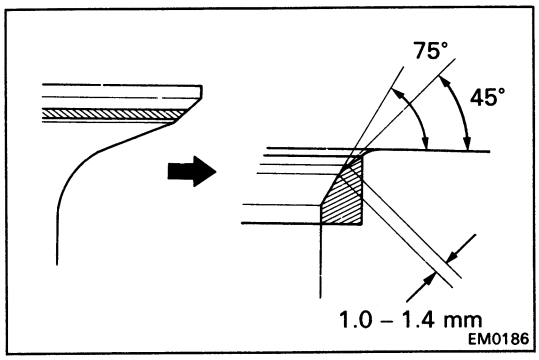

(2) If the seating is too low on the valve face, use 75° and 45° cutters to correct the seat.

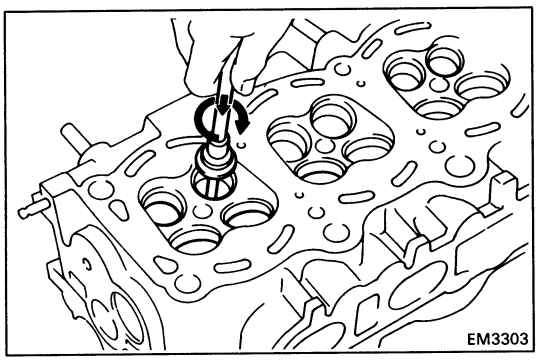

(d) Hand-lap the valve and valve seat with an abrasive compound.

(e) After hand-lapping, clean the valve and valve seat.

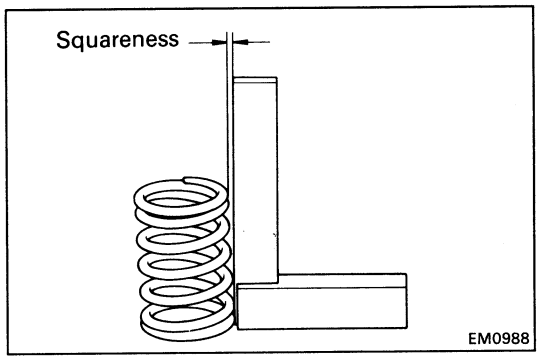

9. INSPECT VALVE SPRINGS

(a) Using a steel square, measure the squareness of the valve spring.

Maximum squareness: 2.0 mm (0.075 in.)

If squareness is greater than maximum, replace the valve spring.

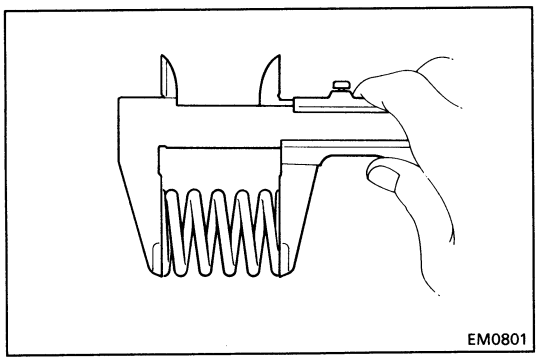

(b) Using vernier calipers, measure the free length of the valve spring.

Free length: 45.0 mm (1.772 in.)

If the free length is not as specified, replace the valve spring.

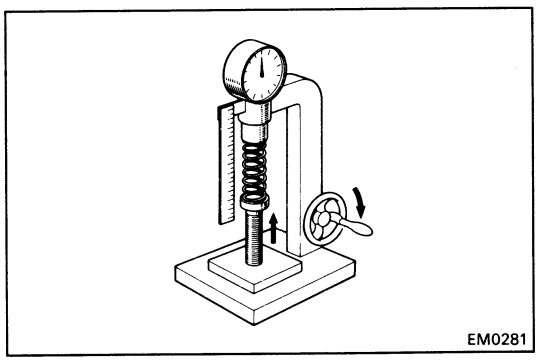

(c) Using a spring tester, measure the tension of the valve spring at the specified installed length.

Installed tension:
16.7 – 19.3 kg (36.8 – 42.5 lb, 164 – 189 N)
at 34.7 mm (0.000 in.)

If the installed tension is not as specified, replace the valve spring.

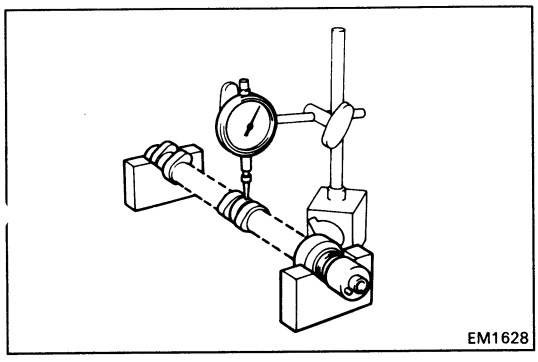

10. INSPECT CAMSHAFTS AND BEARINGS

A. Inspect camshaft for runout

(a) Place the camshaft on V-blocks.

(b) Using a dial indicator, measure the circle runout at the center journal.

Maximum circle runout: 0.04 mm (0.0016 in.)

If the circle runout is greater than maximum, replace the camshaft.

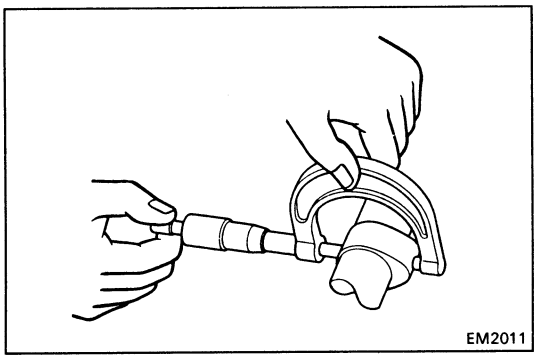

B. Inspect cam lobes

Using a micrometer, measure the cam lobe height.

Standard cam lobe height:

Intake	**35.310 – 35.410 mm (1.3902 – 1.3941 in.)**
Exhaust	**35.560 – 35.660 mm (1.4000 – 1.4039 in.)**

Minimum cam lobe height:

Intake	**35.20 mm (1.3858 in.)**
Exhaust	**35.45 mm (1.3957 in.)**

If the cam lobe height is greater than minimum, replace the camshaft.

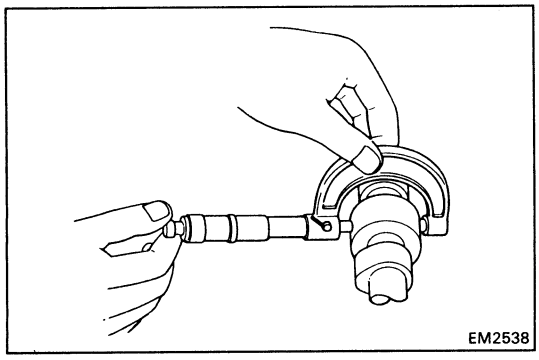

C. Inspect camshaft journals

Using a micrometer, measure the journal diameter.

Journal diameter: 26.959 – 26.975 mm (1.0614 – 1.0620 in.)

If the journal diameter is not as specified, check the oil clearance.

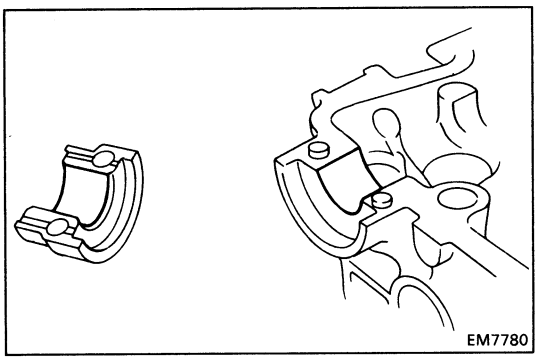

D. Inspect camshaft bearings

Check the bearings for flaking and scoring.

If the bearings are damaged, replace the bearing caps and cylinder head as a set.

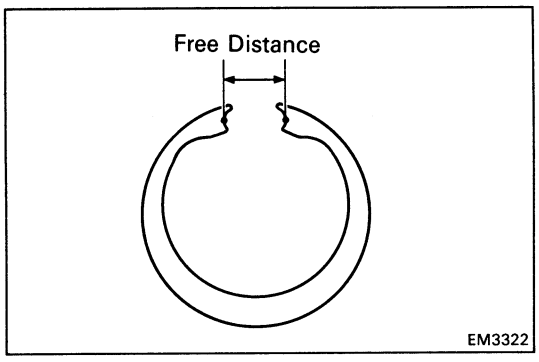

E. Inspect camshaft gear spring

Using vernier calipers, measure the free distance between the spring end.

Free distance: 22.5 – 22.9 mm (0.886 – 0.902 in.)

If the free distance is not as specified, replace the gear spring.

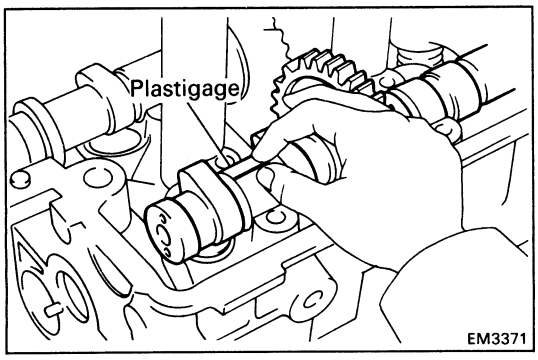

F. Inspect camshaft journal oil clearance

(a) Clean the bearing caps and camshaft journals.

(b) Place the camshafts on the cylinder head.

(c) Lay a strip of Plastigage across each of the camshaft journals.

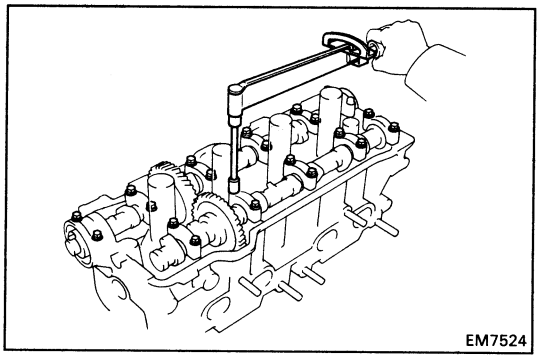

(d) Install the bearing caps.
(See step 4 on pages EM-123 to 125)

Torque: 190 kg-cm (14 ft-lb, 19 N·m)

NOTICE: Do not turn the camshaft.

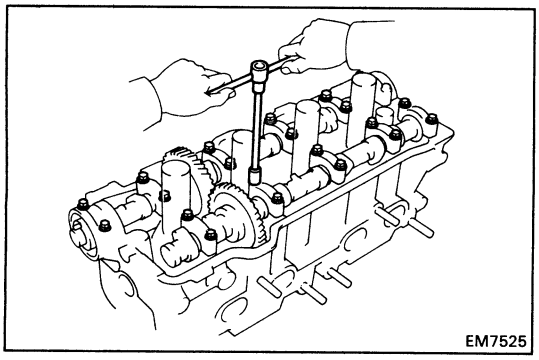

(e) Remove the bearing caps.

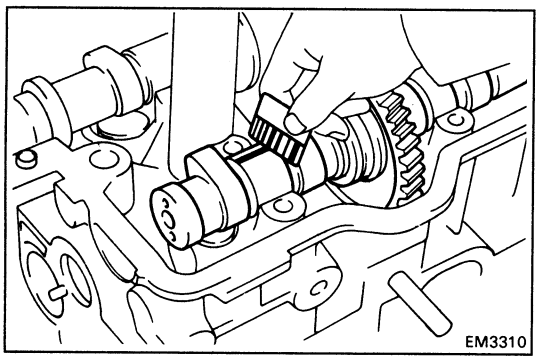

(f) Measure the Plastigage at its widest point.

Standard oil clearance: 0.025 – 0.062 mm (0.0010 – 0.0024 in.)

Maximum oil clearance: 0.10 mm (0.0039 in.)

If the oil clearance is greater than maximum, replace the camshaft. If necessary, replace the bearing caps and cylinder head as a set.

(g) Completely remove the Plastigage.

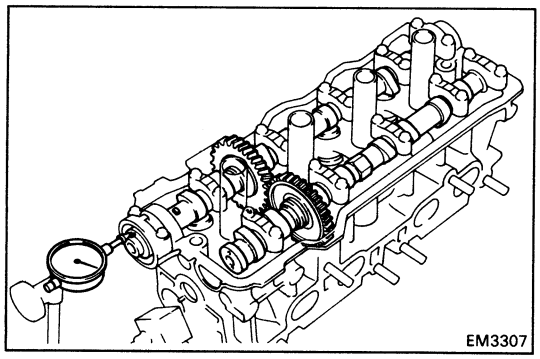

G. Inspect camshaft thrust clearance

(a) Install the camshafts.
(See step 4 on pages EM-123 to 125)

(b) Using a dial indicator, measure the thrust clearance while moving the camshaft back and forth.

Standard thrust clearance:

Intake	**0.045 – 0.100 mm (0.0018 – 0.0039 in.)**
Exhaust	**0.030 – 0.085 mm (0.0012 – 0.0033 in.)**

Maximum thrust clearance:

Intake	**0.12 mm (0.0047 in.)**
Exhaust	**0.10 mm (0.0039 in.)**

If the thrust clearance is greater than maximum, replace the camshaft. If necessary, replace the bearing caps and cylinder head as a set.

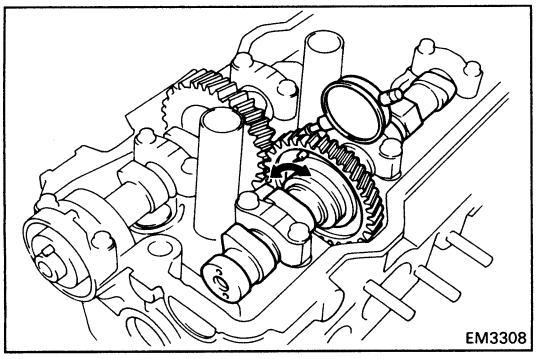
EM3308

H. Inspect camshaft gear backlash

(a) Install the camshafts without installing the exhaust cam sub-gear.
(See step 4 on page EM-123 to 125)

(b) Using a dial indicator, measure the backlash.

Standard backlash: 0.020 – 0.200 mm (0.0008 – 0.0079 in.)

Maximum backlash: 0.30 mm (0.0188 in.)

If the backlash is greater than maximum, replace the camshafts.

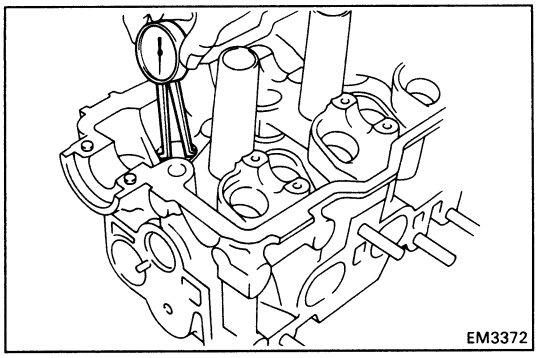
EM3372

11. INSPECT VALVE LIFTERS AND LIFTER BORES

(a) Using a caliper gauge, measure the lifter bore diameter of the cylinder head.

Lifter bore diameter: 28.000 – 28.021 mm (1.1024 – 1.1032 in.)

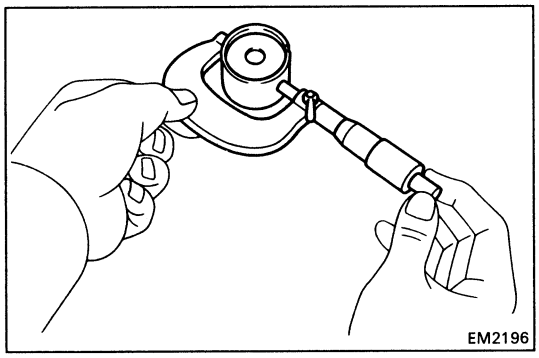
EM2196

(b) Using a micrometer, measure the lifter diameter.

Lifter diameter: 27.975 – 27.985 mm (1.1014 – 1.1018 in.)

(c) Subtract the lifter diameter measurement from the lifter bore diameter measurement.

Standard oil clearance: 0.015 – 0.046 mm (0.0005 – 0.0018 in.)

Maximum oil clearance: 0.07 mm (0.0028 in.)

If the oil clearance is greater than maximum, replace the lifter. If necessary, replace the cylinder head.

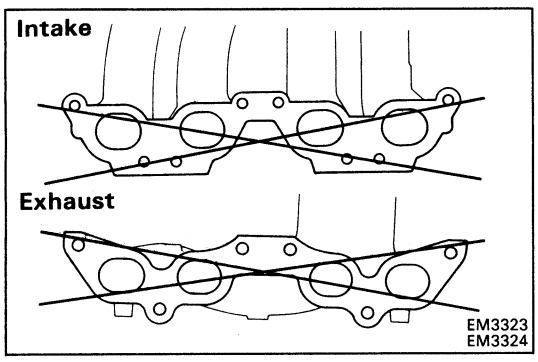

EM3323
EM3324

12. INSPECT INTAKE AND EXHAUST MANIFOLDS

Using precision straight edge and feeler gauge, measure the surface contacting the cylinder head for warpage.

Maximum warpage: 0.30 mm (0.0118 in.)

If warpage is greater than maximum, replace the manifold.

ASSEMBLY OF CYLINDER HEAD

(See page EM-97)

HINT:

- Thoroughly clean all parts to be assembled.
- Before installing the parts, apply new engine oil to all sliding and rotating surfaces.
- Replace all gaskets and oil seals with new ones.

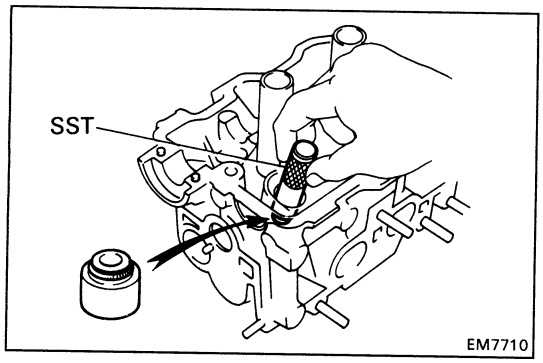

1. INSTALL VALVES

(a) Using SST, push in a new oil seal.

SST 09201-41020

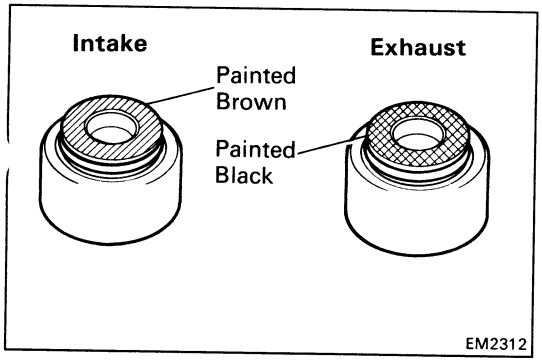

HINT: The intake valve oil seal is brown and the exhaust valve oil seal is black.

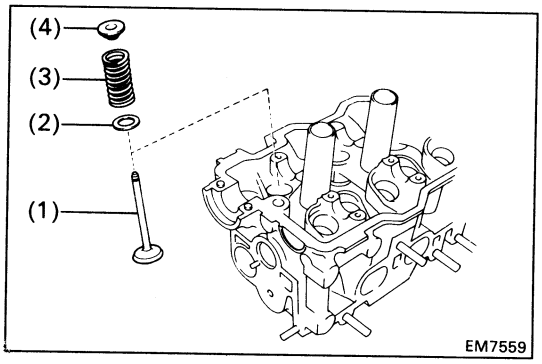

(b) Install the following parts:

(1) Valve
(2) Spring seat
(3) Valve spring
(4) Spring retainer

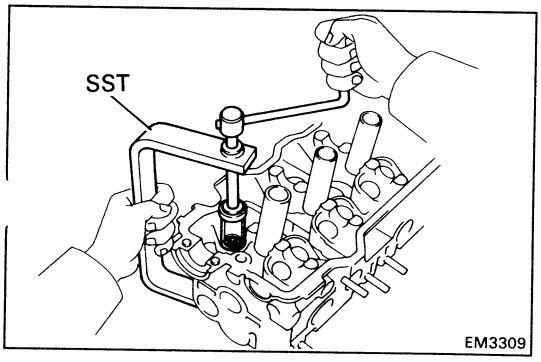

(c) Using SST, compress the valve spring and place the two keepers around the valve stem.

SST 09202-70010

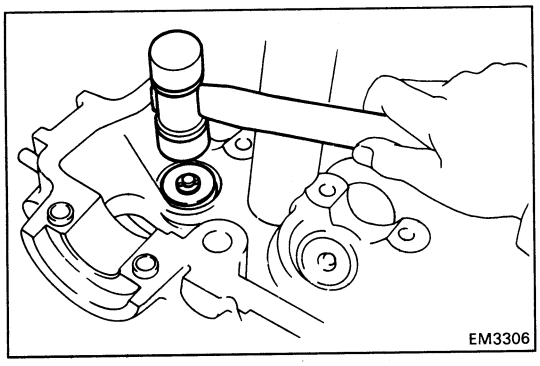

(d) Using a plastic-faced hammer, lightly tap the valve stem tip to assure proper fit.

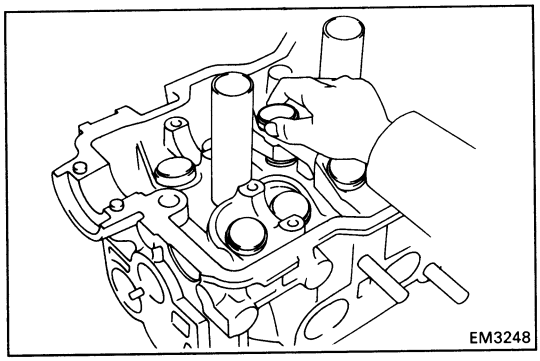

2. INSTALL VALVE LIFTERS AND SHIMS

(a) Install the valve lifter and shim.

(b) Check that the valve lifter rotates smoothly by hand.

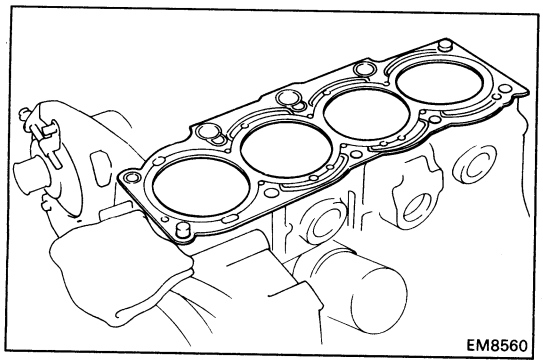

INSTALLATION OF CYLINDER HEAD

(See page EM-97)

1. INSTALL CYLINDER HEAD

A. Place cylinder head on cylinder block

(a) Place a new cylinder head gasket in position on the cylinder block.

NOTICE: Be careful of the installation direction.

(b) Place the cylinder head in position on the cylinder head gasket.

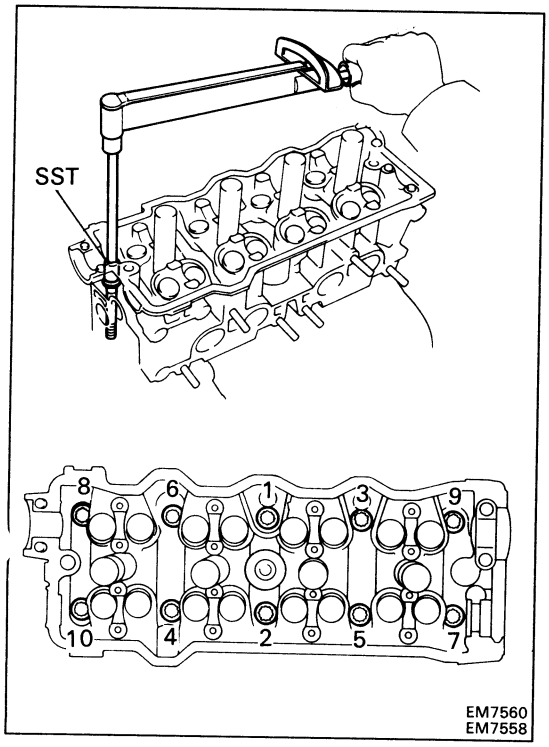

B. Install cylinder head bolts

HINT:

- The cylinder head bolts are tightened in two progressive steps (steps(b)and (d)).
- If any cylinder head bolt is broken or deformed, replace it.

(a) Apply a light coat of engine oil on the threads and under the heads of the cylinder head bolts.

(b) Using SST, install and uniformly tighten the ten cylinder head bolts in several passes in the sequence shown.

SST 09011-38121

Torque: 500 kg-cm (36 ft-lb, 47 N·m)

If any one of the cylinder head bolts does not meet the torque specification, replace the cylinder head bolt.

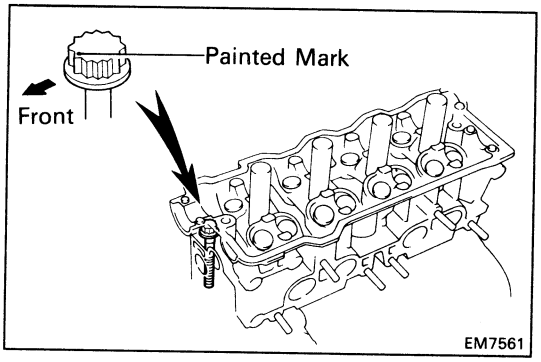

(c) Mark the front of the cylinder head bolt head with paint.

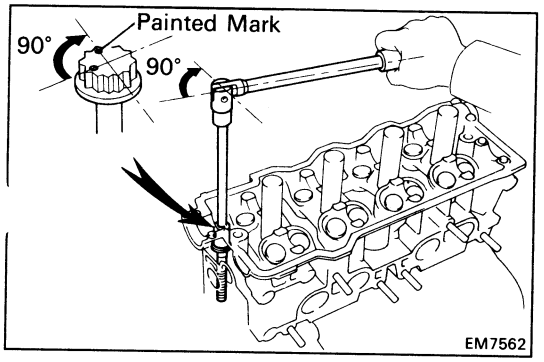

(d) Retighten the cylinder head bolts 90° in the numerical order shown.

(e) Check that the painted mark is now at a 90° angle to front.

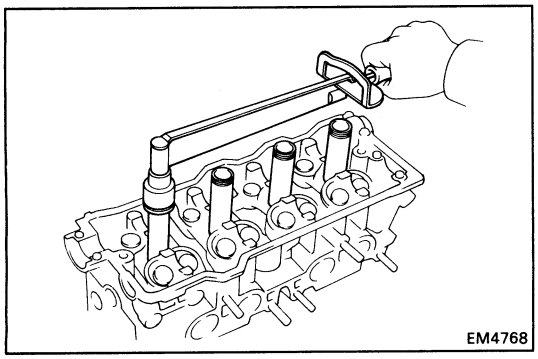

2. INSTALL SPARK PLUG TUBES

(a) Clean the cylinder head tube holes of any residual adhesive, oil or foreign particles. Remove any oil with kerosene or gasoline.

(b) Screw the threads of the spark plug tube coated with adhesive into the cylinder head.

(c) Using the spark plug tube nut and a 30 mm socket wrench, tighten the spark plug tubes.

Torque: 400 kg-cm (29 ft-lb, 39 N·m)

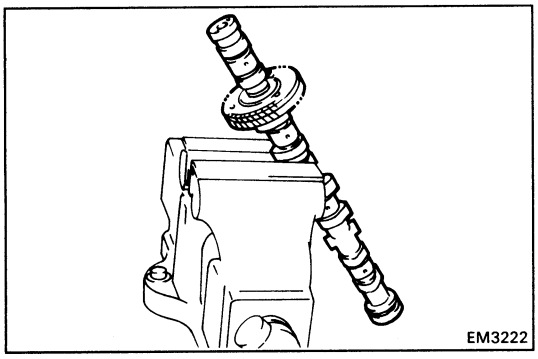

3. ASSEMBLE EXHAUST CAMSHAFT

(a) Mount the hexagonal wrench head portion of the camshaft in a vise.

NOTICE: Be careful not to damage the camshaft.

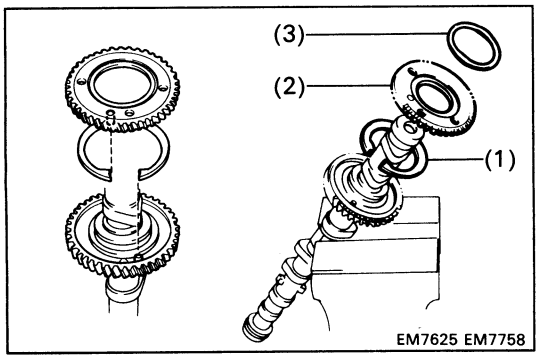

(b) Install the following parts:

(1) Camshaft gear spring

(2) Camshaft sub-gear

(3) Wave washer

HINT: Align the pins on the gears with the spring ends.

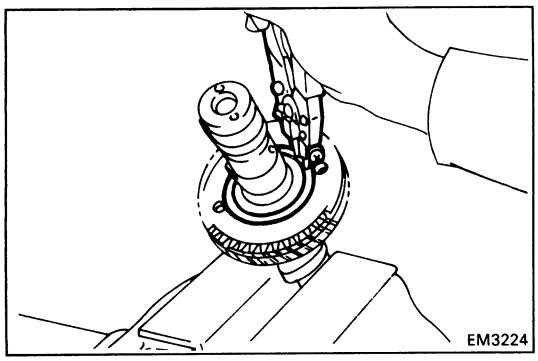

(c) Using snap ring pliers, install the snap ring.

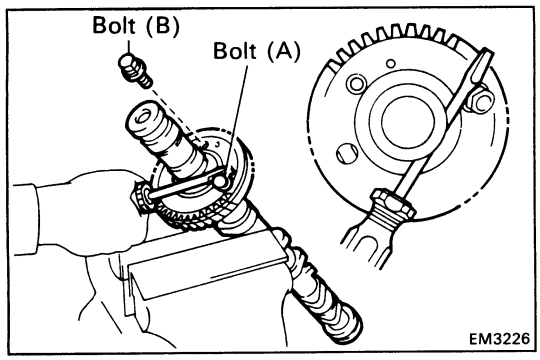

(d) Insert a service bolt (A) into the service hole of the camshaft sub-gear.

(e) Using a screwdriver, align the holes of the camshaft main gear and sub-gear by turning the camshaft sub-gear clockwise, and install a service bolt (B).

NOTICE: Be careful not to damage the camshaft.

4. INSTALL CAMSHAFTS

NOTICE: Since the thrust clearance of the camshaft is small, the camshaft must be kept level while it is being installed. If the camshaft is not kept level, the portion of the cylinder head receiving the shaft thrust may crack or be damaged, causing the camshaft to seize or break. To avoid this, the following steps should be carried out.

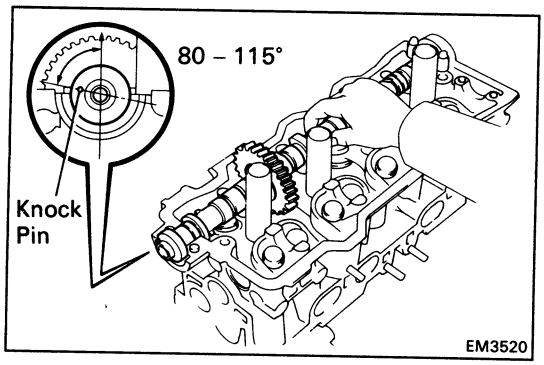

A. Install intake camshaft

(a) Apply MP grease to the thrust portion of the camshaft.

(b) Place the intake camshaft at 80 – 115° BTDC of camshaft angle on the cylinder head.

HINT: The above angle allows the No.1 and No.3 cylinder cam lobes of the intake camshaft to push their valve lifters evenly.

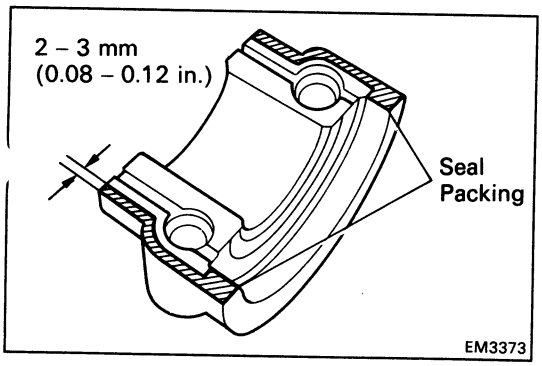

(c) Apply seal packing to the No.1 bearing cap as shown.

Seal packing: Part No. 08826-00080 or equivalent

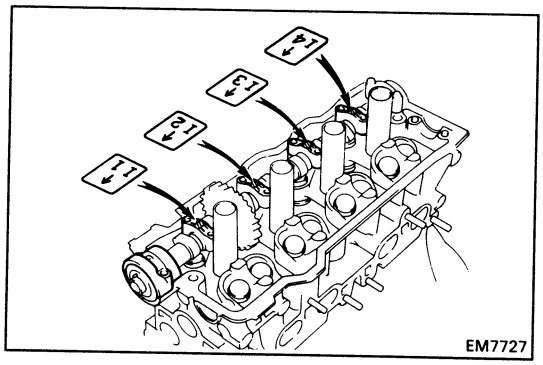

(d) Install the bearing caps in their proper locations.

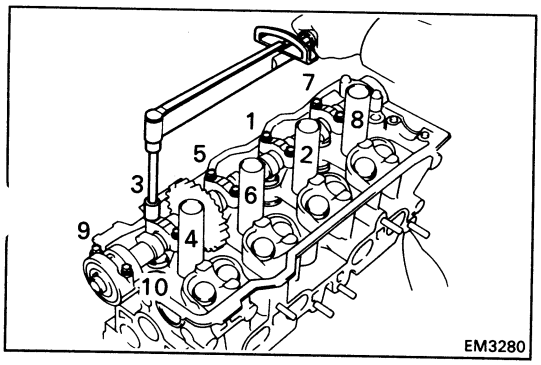

(e) Apply a light coat of engine oil on the threads and under the heads of the bearing cap bolts.

(f) Install and uniformly tighten the ten bearing cap bolts in several passes in the sequence shown.

Torque: 190 kg-cm (14 ft-lb, 19 N·m)

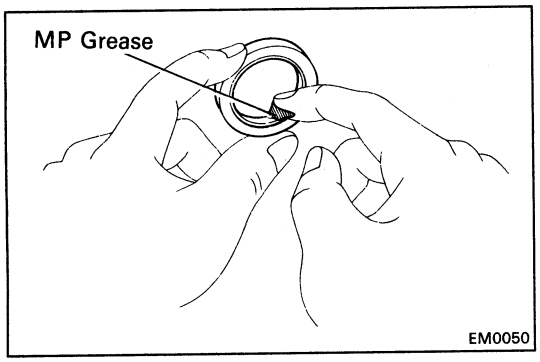

(g) Apply MP grease to a new oil seal lip.

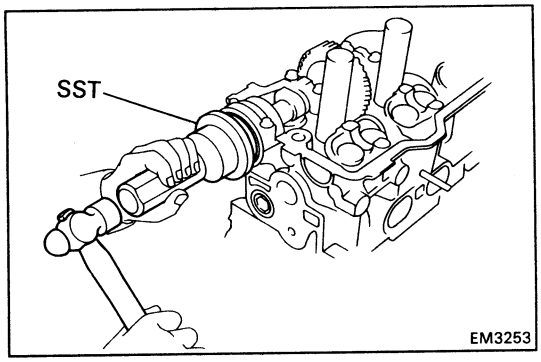

(h) Using SST, tap in the oil seal.

SST 09223-46011

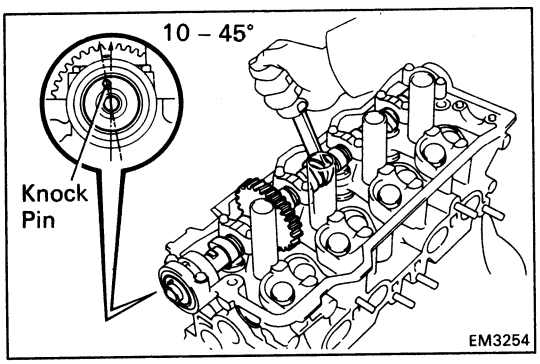

B. Install exhaust camshaft

(a) Set the knock pin of the intake camshaft at 10 – 45° BTDC of camshaft angle.

HINT: The above angle allows the No.2 and No.4 cylinder cam lobes of the exhaust camshaft to push their valve lifters evenly.

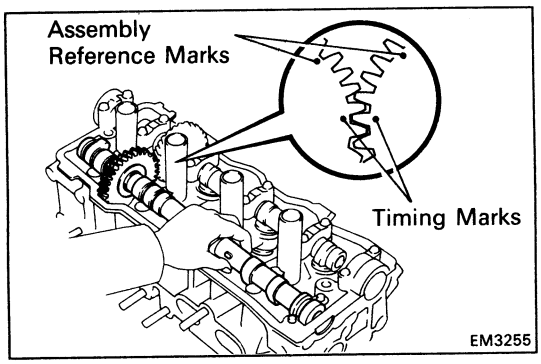

(b) Apply MP grease to the thrust portion of the camshaft.

(c) Engage the exhaust camshaft gear to the intake camshaft gear by matching the timing marks on each gear.

(d) Roll down the exhaust camshaft onto the bearing journals while engaging gears with each other.

NOTICE: There are also assembly reference marks on each gear as shown in the illustration. Do not use these marks.

(e) Turn the intake camshaft clockwise or counterclockwise little by little until the exhaust camshaft sits in the bearing journals evenly without rocking the camshaft on the bearing journals.

NOTICE: It is very important to replace the camshaft in the bearing journals evenly while tightening bearing caps in the subsequent steps.

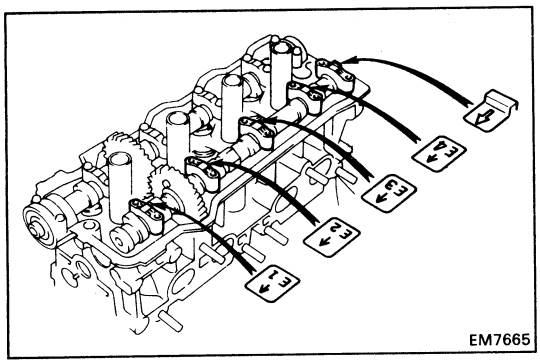

(f) Install the bearing caps in their proper location.

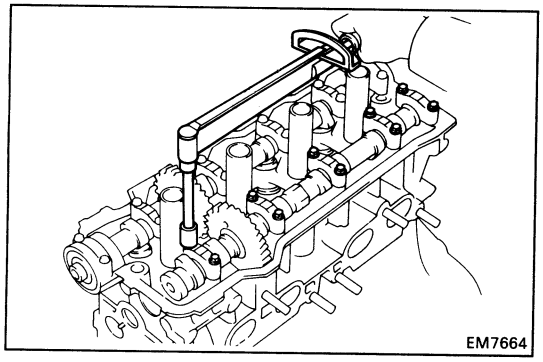

(g) Apply a light coat of engine oil on the threads and under the heads of bearing cap bolts.

(h) Install and uniformly tighten the ten bearing cap bolts in several passes, in the sequence shown.

Torque: 190 kg-cm (14 ft-lb, 19 N·m)

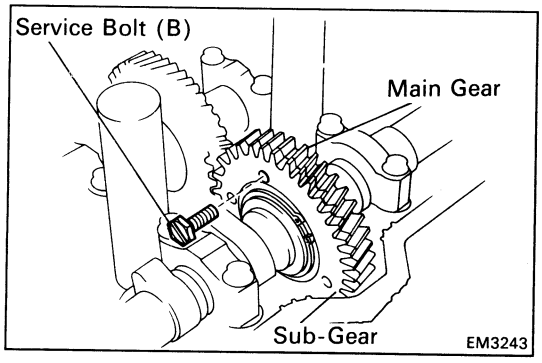

(i) Remove the service bolt (B).

5. CHECK AND ADJUST VALVE CLEARANCE
(See page EM-16)

Turn the camshaft and position the cam lobe upward, and check and adjust the valve clearance.

Valve clearance (Cold):

Intake	**0.19 – 0.29 mm (0.007 – 0.011 in.)**
Exhaust	**0.28 – 0.38 mm (0.011 – 0.015 in.)**

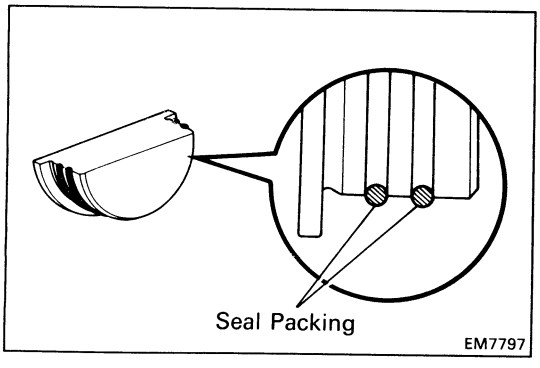

6. INSTALL SEMI-CIRCULAR PLUGS

(a) Remove any old packing (FIPG) material.

(b) Apply seal packing to the semi-circular plug grooves.

Seal packing: Part No. 08826-00080 or equivalent

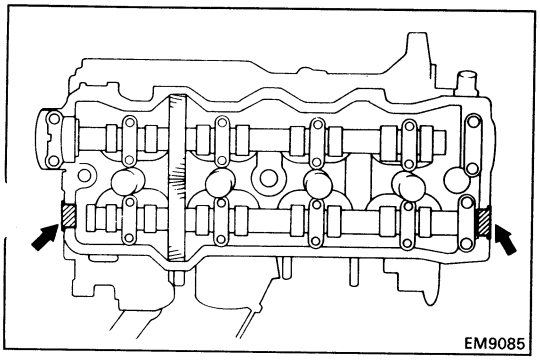

(c) Install the two semi-circular plugs to the cylinder head.

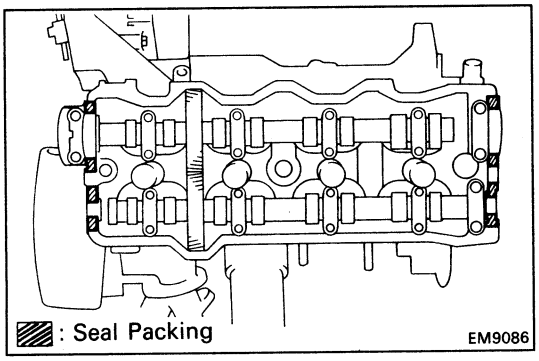

7. INSTALL CYLINDER HEAD COVER

(a) Remove any old packing (FIPG) material.

(b) Apply seal packing to the cylinder head as shown in the figure.

Seal packing: Part No. 08826-00080 or equivalent

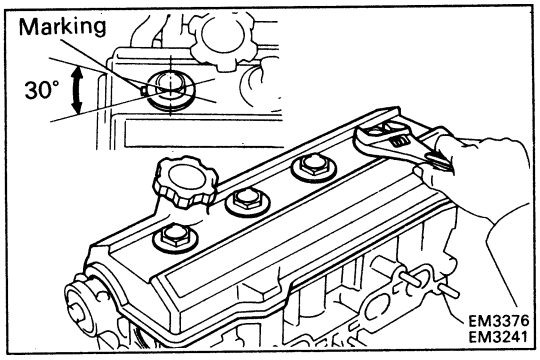

(c) Install the gasket to the head cover.

(d) Install the head cover with the four grommets and nuts.

Torque: 180 kg-cm (13 ft-lb, 18 N·m)

HINT: Install the grommets so that its markings are as shown in the illustration. Then install the grommet to its original position.

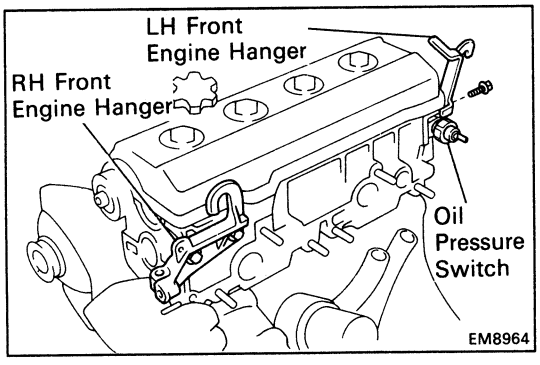

8. INSTALL OIL PRESSURE SWITCH

Apply adhesive to two or three threads.

Adhesive: Part No. 08833-00080, THREE BOND 1324 or equivalent

9. INSTALL RH FRONT ENGINE HANGER

Install the engine hanger with the two bolts.

Torque: 250 kg-cm (18 ft-lb, 25 N·m)

10. INSTALL LH FRONT ENGINE HANGER

Install the engine hanger with the bolt.

Torque: 250 kg-cm (18 ft-lb, 25 N·m)

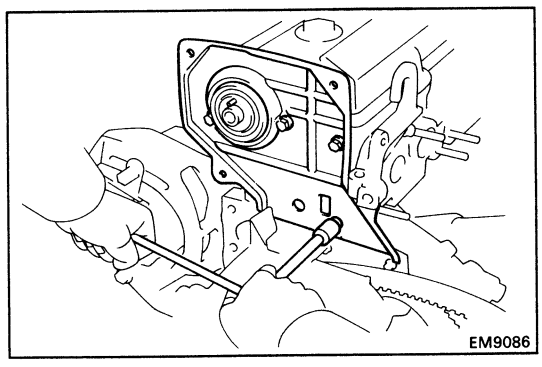

11. INSTALL NO.3 TIMING BELT COVER

Install the timing belt cover with the four bolts.

Torque: 80 kg-cm (69 in.-lb, 7.8 N·m)

12. INSTALL NO.1 IDLER PULLEY AND TENSION SPRING
(See step 4 on page EM-55)

13. INSTALL CAMSHAFT TIMING PULLEY
(See steps 9 to 17 on pages EM-56 to 59)

14. INSTALL INJECTOR AND DELIVERY PIPE
(See steps 1 and 3 to 6 on pages FI-125 to 127)

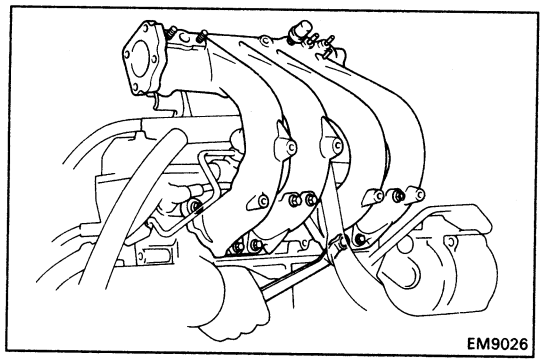

15. INSTALL INTAKE MANIFOLD

(a) Install a new gasket and the intake manifold with the six bolts and two nuts.

Torque: 195 kg-cm (14 ft-lb, 19 N·m)

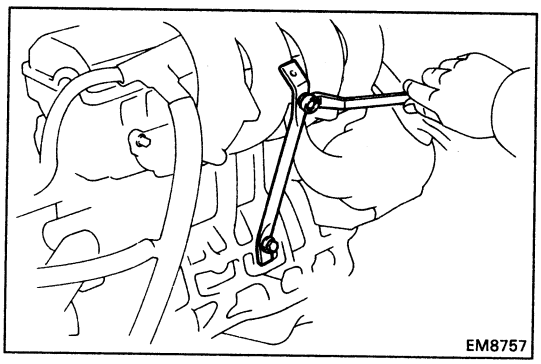

(b) Install the manifold stay with the two bolts.

Torque:

12 mm head bolt	**195 kg-cm (14 ft-lb, 19 N·m)**
14 mm head bolt	**425 kg-cm (31 ft-lb, 42 N·m)**

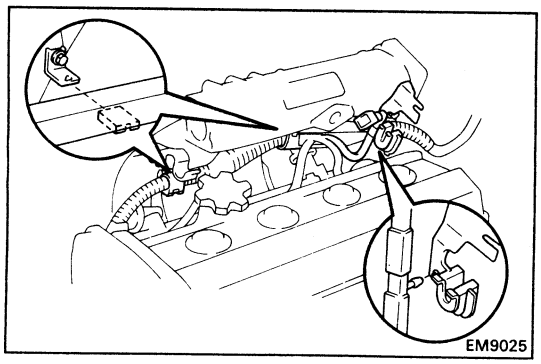

(c) Connect the two wire clamps to the wire bracket.

(d) Connect the wire clamp to the accelerator bracket.

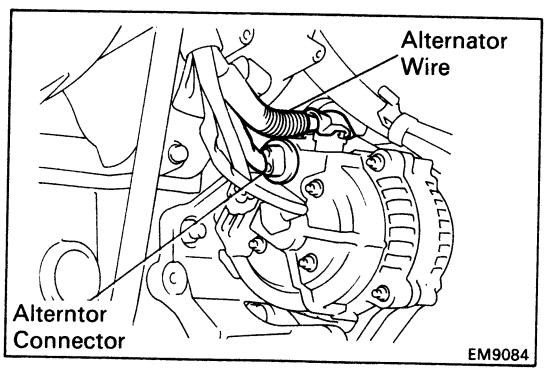

(e) Connect the alternator connector and wire.

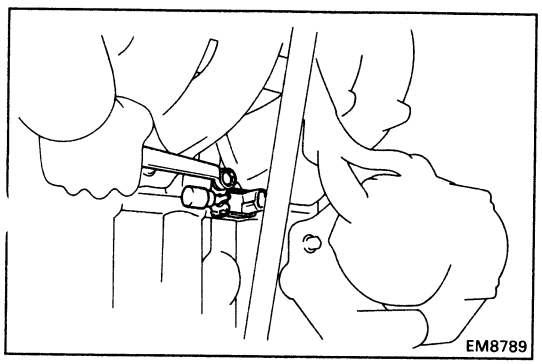

16. INSTALL EGR VSV

(a) Install the VSV with the bolt.

(b) Connect the VSV connector.

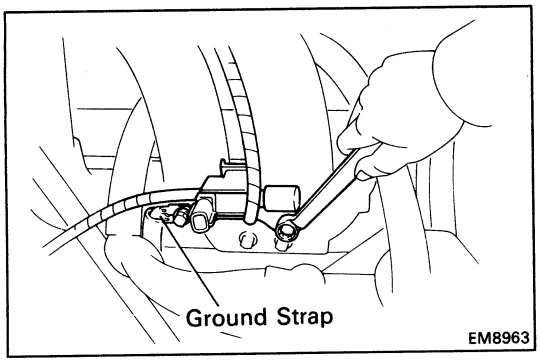

17. INSTALL FUEL PRESSURE VSV

(a) Install the VSV with the two bolts. Connect the ground strap.

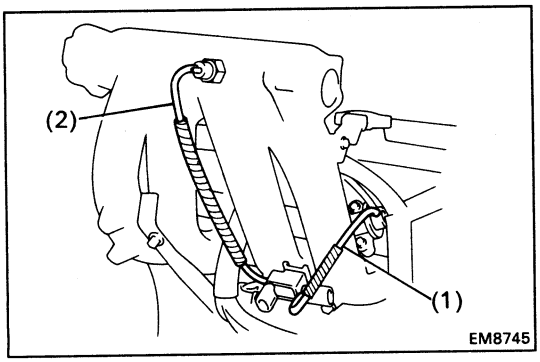

(b) Connect the following hoses:
  (1) Vacuum hose from fuel pressure regulator
  (2) Vacuum hose from intake manifold

(c) Connect the VSV connector.

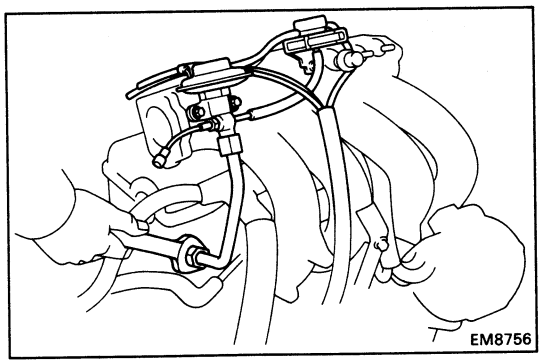

18. INSTALL EGR VALVE AND VACUUM MODULATOR

(a) Install a new gasket and the EGR valve with the union nut and two bolts.

Torque:

Union nut	**600 kg-cm (43 ft-lb, 59 N·m)**
Bolt	**130 kg-cm (9 ft-lb, 13 N·m)**

(b) Install the EGR modulator to the clamp.

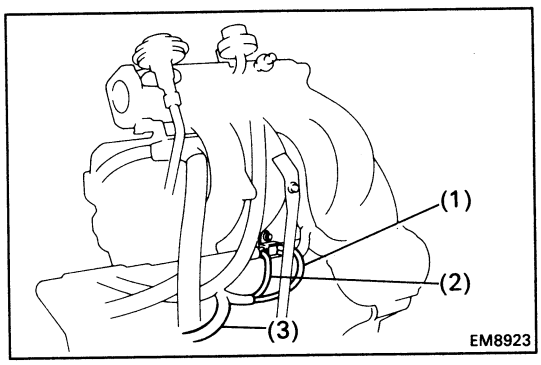

(c) Connect the following hoses:
  (1) Vacuum hose (from Q port of EGR vacuum modulator) to G port of EGR VSV
  (2) Vacuum hose (from EGR valve) to E port of EGR VSV
  (3) Vacuum hose to charcoal canister

(d) (CALIF. only)
Connect the EGR gas temperature sensor connector.

19. INSTALL COLD START INJECTOR
(See steps 1 and 3 on page FI-104)

20. INSTALL COLD START INJECTOR PIPE
(See step 2 on page FI-104)

21. INSTALL THROTTLE BODY
(See steps 2 to 5 on pages FI-146 and 147)

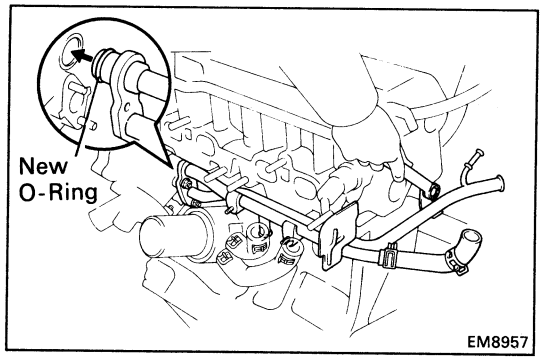

22. INSTALL WATER BY-PASS PIPE

(a) Install a new O-ring to the by-pass pipe.

(b) Apply soapy water on the O-ring.

(c) Install a new gasket and the by-pass pipe with the two nuts and two bolts.

Torque(Nut): 95 kg-cm (82 in.-lb, 9.3 N·m)

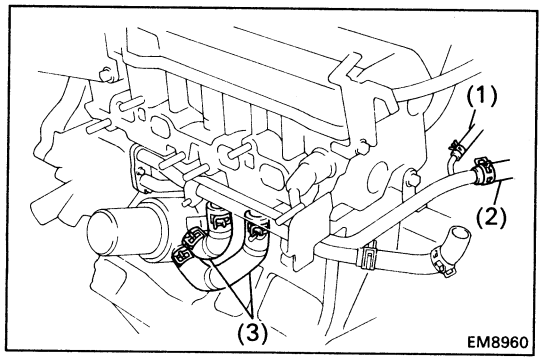

(d) Connect the following hoses:

(1) ISC water by-pass hose

(2) Heater water hose

(3) Two oil cooler water by-pass hoses

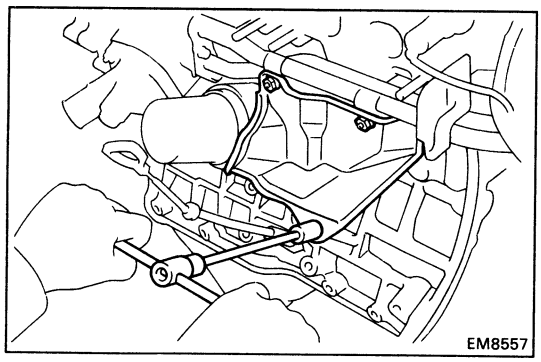

(e) Install the oil cooler heat protector with the bolt and two nuts.

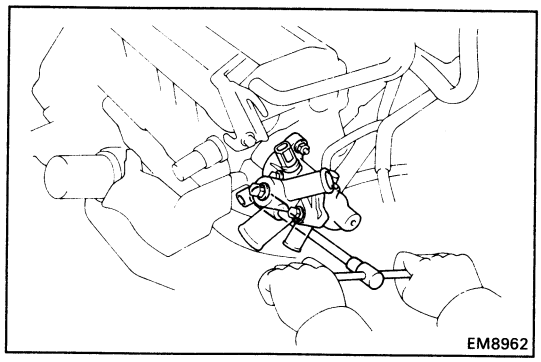

23. INSTALL WATER OUTLET AND HOUSING

(a) Install a new gasket, the water outlet and housing assembly with the two bolts.

Torque: 150 kg-cm (11 ft-lb, 15 N·m)

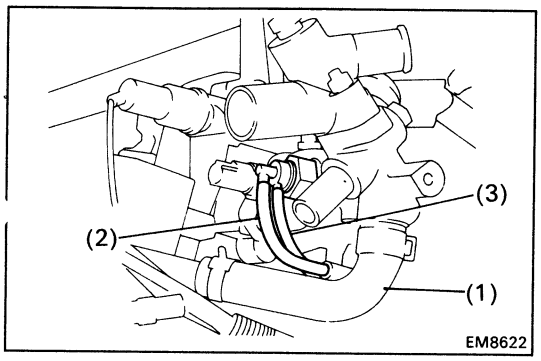

(b) Connect the following hoses:

(1) Water by-pass pipe hose

(2) EVAP BVSV vacuum hose (from P port of throttle body)

(3) EVAP BVSV vacuum hose (from charcoal canister)

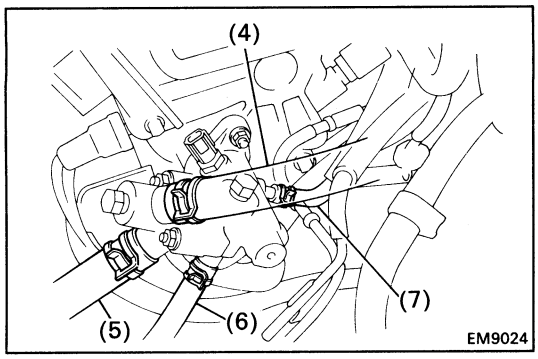

(4) Water filler hose
(5) Radiator hose
(6) Heater water hose
(7) ISC water by-pass hose

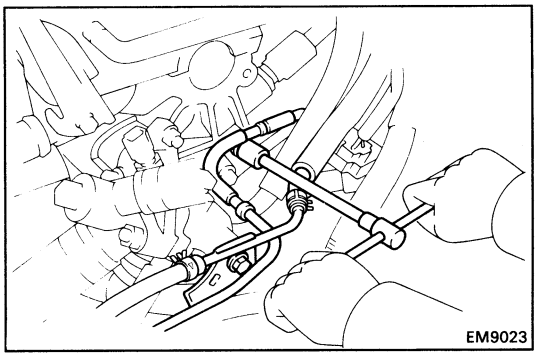

(c) Install the fuel inlet hose (with the return tube) from the water outlet and cylinder head.
(d) Connect the following connectors:
- Water temperature sender gauge connector
- Water temperature sensor connector
- Cold start injector time switch connector

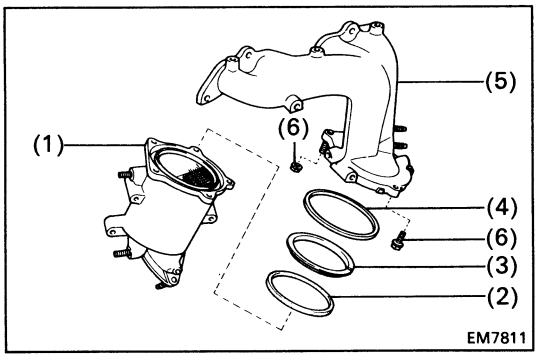

24. ASSEMBLE EXHAUST MANIFOLD AND CATALYTIC CONVERTER

Assemble the following parts:

(1) Catalytic converter
(2) Cushion
(3) Retainer
(4) Gasket
(5) Exhaust manifold
(6) Three bolts and two nuts

Torque: 300 kg-cm (22 ft-lb, 29 N·m)

(7) Two converter heat insulators
(8) Eight bolts
(9) Manifold lower heat insulator
(10) Five bolts

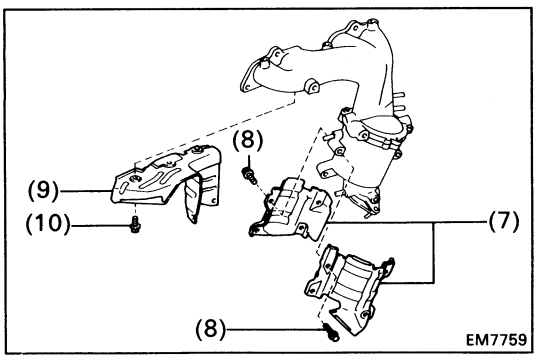

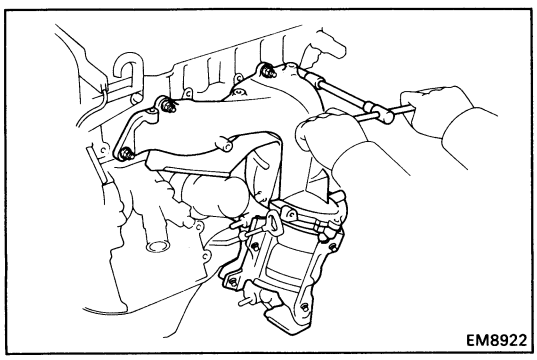

25. INSTALL EXHAUST MANIFOLD AND CATALYTIC CONVERTER ASSEMBLY

(a) Install a new gasket, the exhaust manifold and catalytic converter assembly with the new six nuts.

Torque: 500 kg-cm (36 ft-lb, 49 N·m)

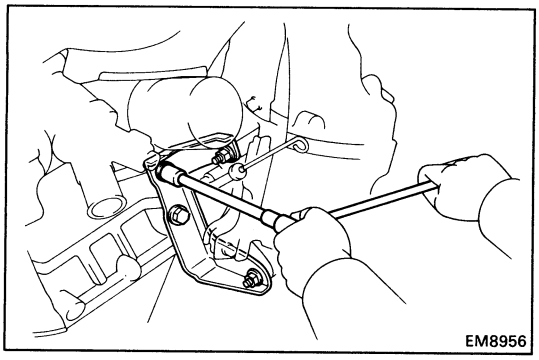

(b) Install the catalytic converter stay with the two bolts and two new nuts.

Torque: 425 kg-cm (31 ft-lb, 42 N·m)

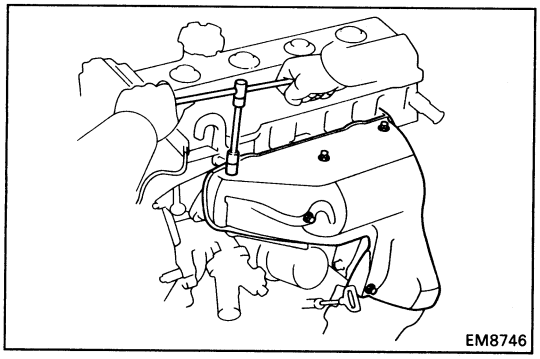

(c) Install the manifold upper heat insulator with the six bolts.

(d) Connect the oxygen sensor (main) connector.

(e) (CALIF. only)
Connect the sub-oxygen sensor connector.

26. INSTALL FRONT EXHAUST PIPE
(See step 15 on page EM-197)

27. INSTALL DISTRIBUTOR
(See steps 1 to 4 on page IG-21 and 22)

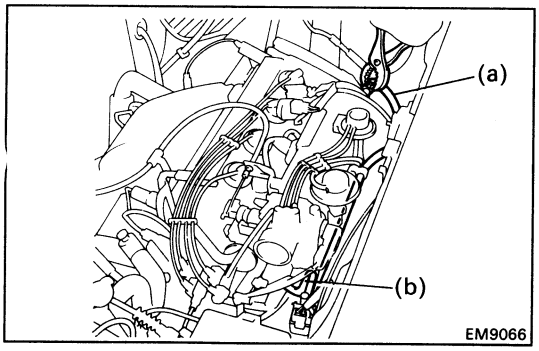

28. CONNECT VACUUM HOSES

(a) A/C VSV vacuum hose from intake manifold

(b) A/C VSV air hose from ISC valve

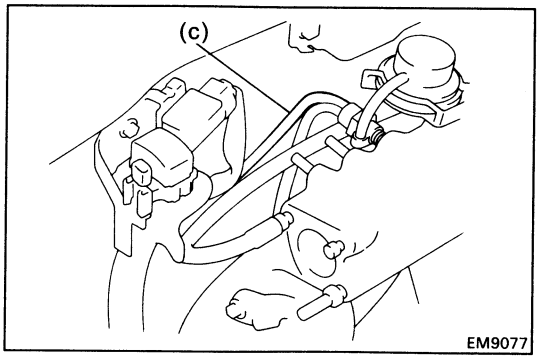

(c) Vacuum sensor hose from intake manifold

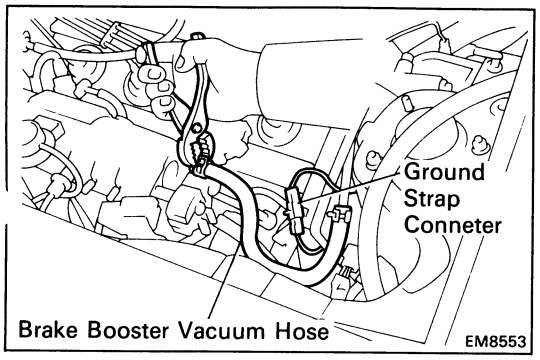

(d) Brake booster vacuum hose from intake manifold

29. CONNECT GROUND STRAP CONNECTOR

30. INSTALL AIR CLEANER CAP
(See page 35 on page EM-226)

31. INSTALL CRUISE CONTROL ACTUATOR (w/ CRUISE CONTROL SYSTEM) AND ACCELERATOR LINKAGE
(See step 33 on page EM-225)

32. INSTALL ACCELERATOR CABLE, AND ADJUST IT

33. (A/T)
CONNECT THROTTLE CABLE, AND ADJUST IT

34. INSTALL SUSPENSION UPPER BRACE
(See step 36 on page EM-226)

35. CONNECT CABLE TO NEGATIVE TERMINAL OF BATTERY

36. FILL WITH ENGINE COOLANT (See page CO-7)

Capacity (w/ Heater):
13.0 liters (13.7 US qts, 11.4 Imp. qts)

37. START ENGINE AND CHECK FOR LEAKS

38. ADJUST IGNITION TIMING
(See steps 9 to 13 on pages IG-21 and 22)

Ignition timing:
10°BTDC @ idle
(w/ Terminals TE1 and E1 connected)

39. INSTALL ENGINE HOOD SIDE PANELS

40. INSTALL ENGINE UNDER COVER

41. PERFORM ROAD TEST

Check for abnormal noise, shock, slippage, correct shift points and smooth operation.

42. RECHECK ENGINE COOLANT LEVEL AND OIL LEVEL

CYLINDER BLOCK (3S-GTE)

COMPONENTS

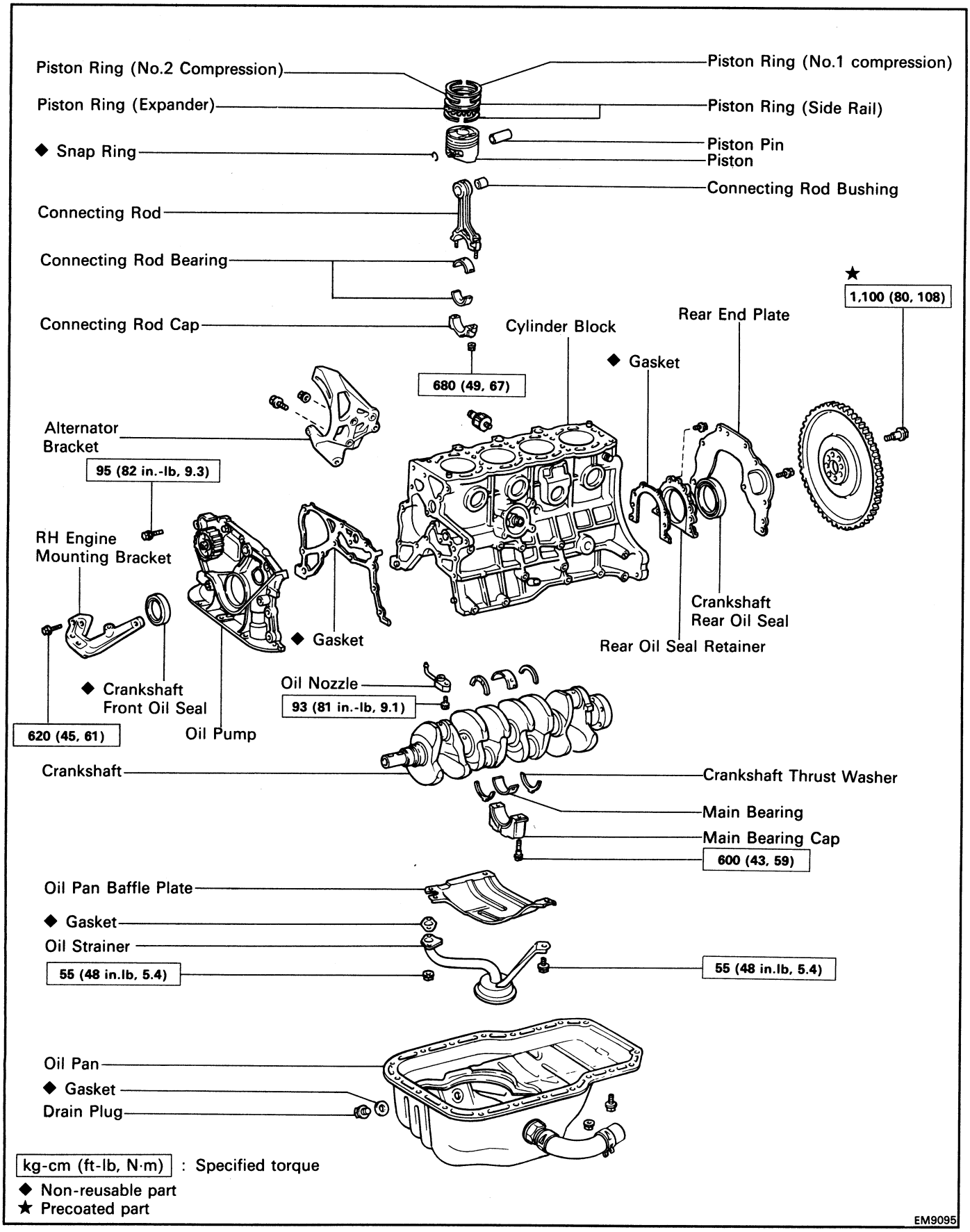

kg-cm (ft-lb, N·m) : Specified torque

◆ Non-reusable part

★ Precoated part

EM9095

REMOVAL OF ENGINE

1. **DISCONNECT CABLE FROM NEGATIVE TERMINAL OF BATTERY**

   CAUTION: Work must be started after approx. 20 seconds or longer from the time the ignition switch is turned to the "LOCK" position and the negative (–) terminal cable is disconnected from the battery.

2. **REMOVE ENGINE HOOD**

3. **REMOVE ENGINE HOOD SIDE PANELS**

4. **REMOVE ENGINE UNDER COVERS**

5. **DRAIN ENGINE COOLANT (See page CO-6)**

6. **DRAIN ENGINE OIL (See page LU-7)**

7. **DRAIN TRANSAXLE OIL**

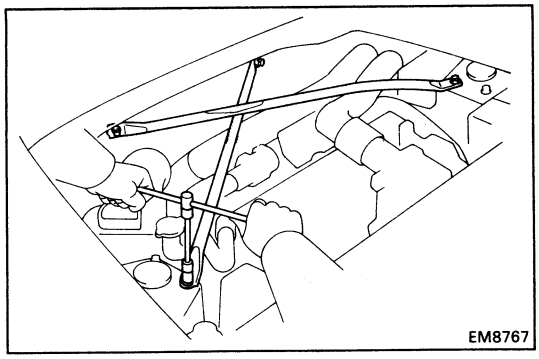

8. **REMOVE SUSPENSION UPPER BRACE**

   Remove the two bolts, two nuts and upper brace.

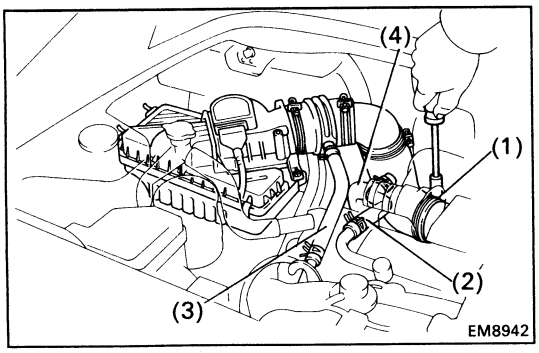

9. **REMOVE AIR CLEANER**
   (a) Disconnect the air flow meter connector.
   (b) Disconnect the four air cleaner cap clips.
   (c) Disconnect the following hoses:
      (1) Air cleaner hose from turbocharger
      (2) PCV hose from cylinder head cover
      (3) Air hose from No.2 air tube
      (4) Air hose from air by-pass valve
   (d) Remove the air cleaner cap, air flow meter assembly and element.
   (e) Remove the three bolts and air cleaner case.

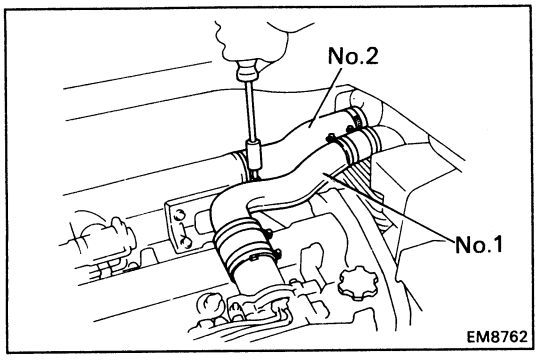

10. **REMOVE NO.1 AIR INTAKE CONNECTOR**

11. **REMOVE NO.2 AIR INTAKE CONNECTOR**

12. **DISCONNECT ACCELERATOR CABLE FROM THROTTLE BODY**

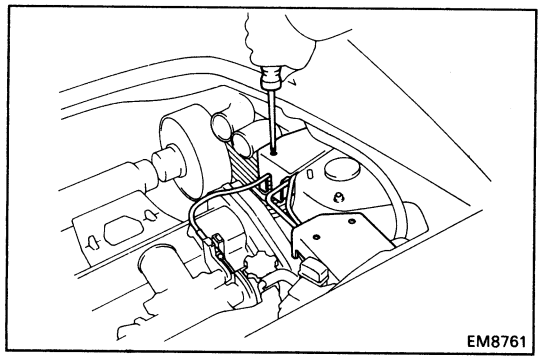

13. REMOVE CRUISE CONTROL ACTUATOR (w/ CRUISE CONTROL SYSTEM) AND LINKAGE

(a) Remove the two screws and actuator cover.
(b) Remove the screw and accelerator linkage cover.
(c) Remove the three bolts and actuator.
(d) Disconnect the actuator connector
(e) Remove the three bolts and accelerator linkage.
(f) Disconnect the cable from the accelerator linkage.

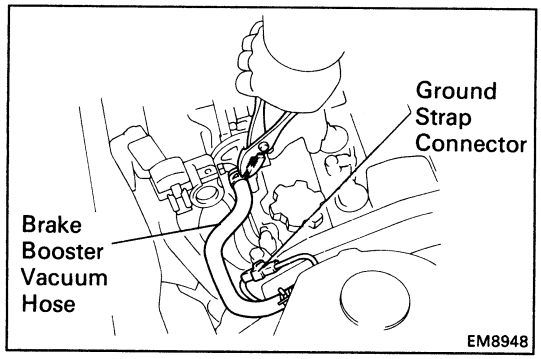

14. DISCONNECT BRAKE BOOSTER VACUUM HOSE

15. DISCONNECT GROUND STRAP CONNECTOR

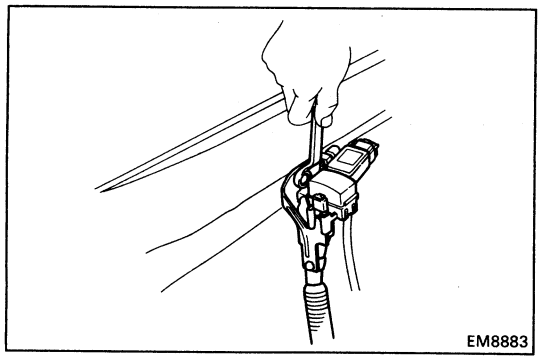

16. REMOVE CHECK CONNECTOR AND TURBOCHARGING PRESSURE SENSOR

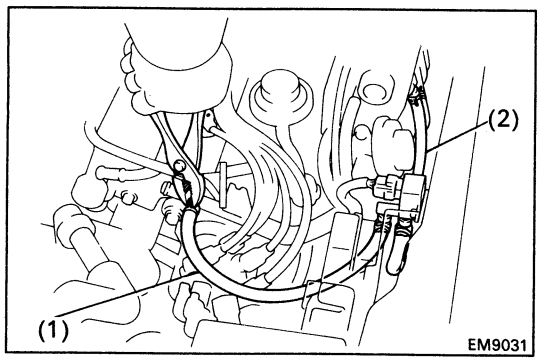

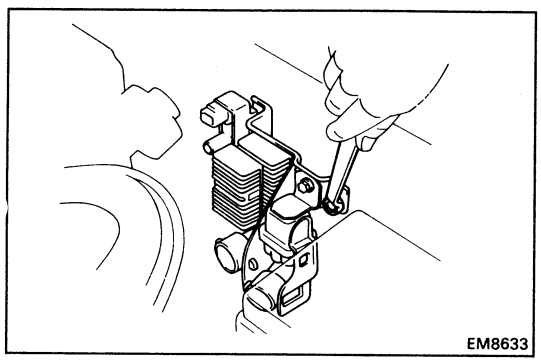

17. REMOVE INJECTOR SOLENOID RESISTOR, FUEL PUMP RELAY, FUEL PUMP RESISTOR AND A/C VSV

(a) Disconnect the following connectors:
- Solenoid resistor connector
- Fuel pump relay connector
- Fuel pump resistor connector
- A/C VSV connector

(b) Disconnect the following hoses:
(1) A/C VSV air hose from No.2 air tube
(2) A/C VSV vacuum hose from intake manifold

(c) Remove the two bolts, A/C VSV, the solenoid resistor and fuel pump relay, fuel pump resistor assembly.

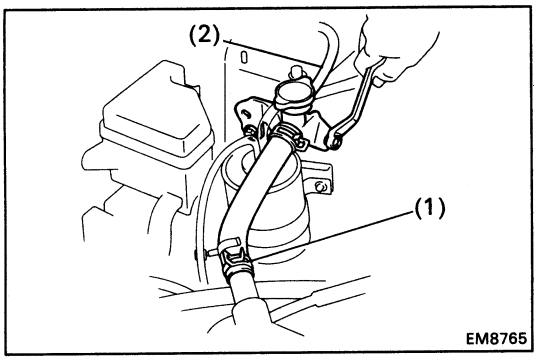

18. REMOVE WATER FILLER

(a) Disconnect the following hose:
  (1) Water filler hose
  (2) Coolant reservoir hose

(b) Remove the two bolts and water filler.

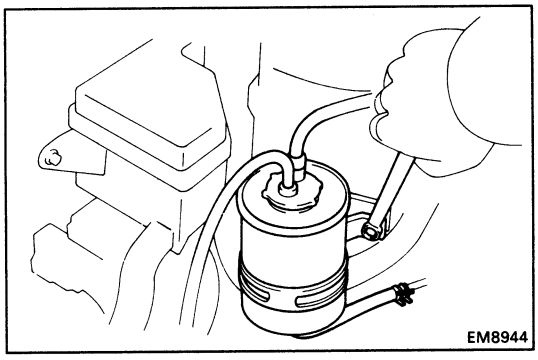

19. REMOVE CHARCOAL CANISTER

(a) Disconnect the three vacuum hoses.

(b) Remove the two bolts and charcoal canister.

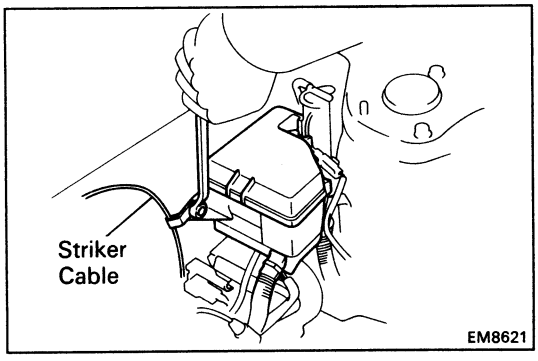

20. REMOVE ENGINE RELAY BOX, AND DISCONNECT ENGINE WIRE

(a) Remove the two bolts and relay box. Disconnect the luggage compartment striker cable

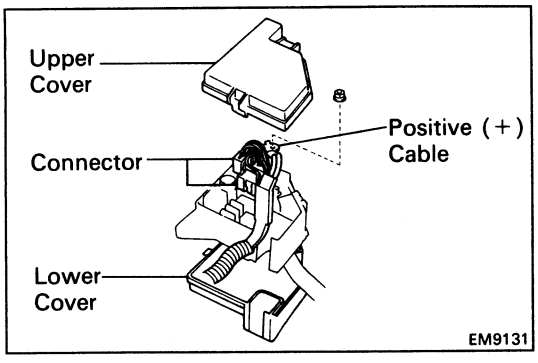

(b) Remove the upper and lower covers from the relay box.

(c) Disconnect the positive (+) cable and two connectors of the engine wire from the relay box.

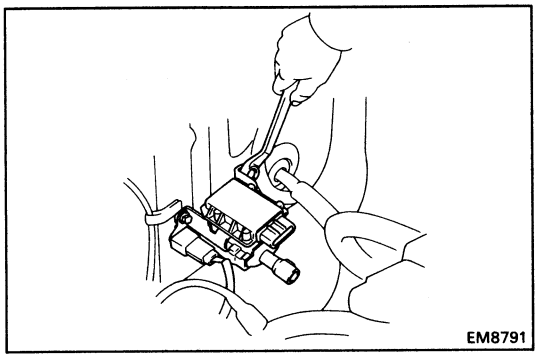

21. REMOVE IGNITION COIL AND IGNITER

(a) Disconnect the ignition coil connector.

(b) Disconnect the igniter connector.

(c) Disconnect the high-tension cord.

(d) Remove the two bolts, the ignition coil and igniter assembly. Disconnect the noise filter.

22. DISCONNECT ENGINE WIRE FROM LUGGAGE COMPARTMENT

(a) Disconnect the following connectors:

(1) Two engine ECU connectors

(2) Starter relay connector

(3) Engine compartment cooling fan relay connector

(4) Engine compartment wire connector

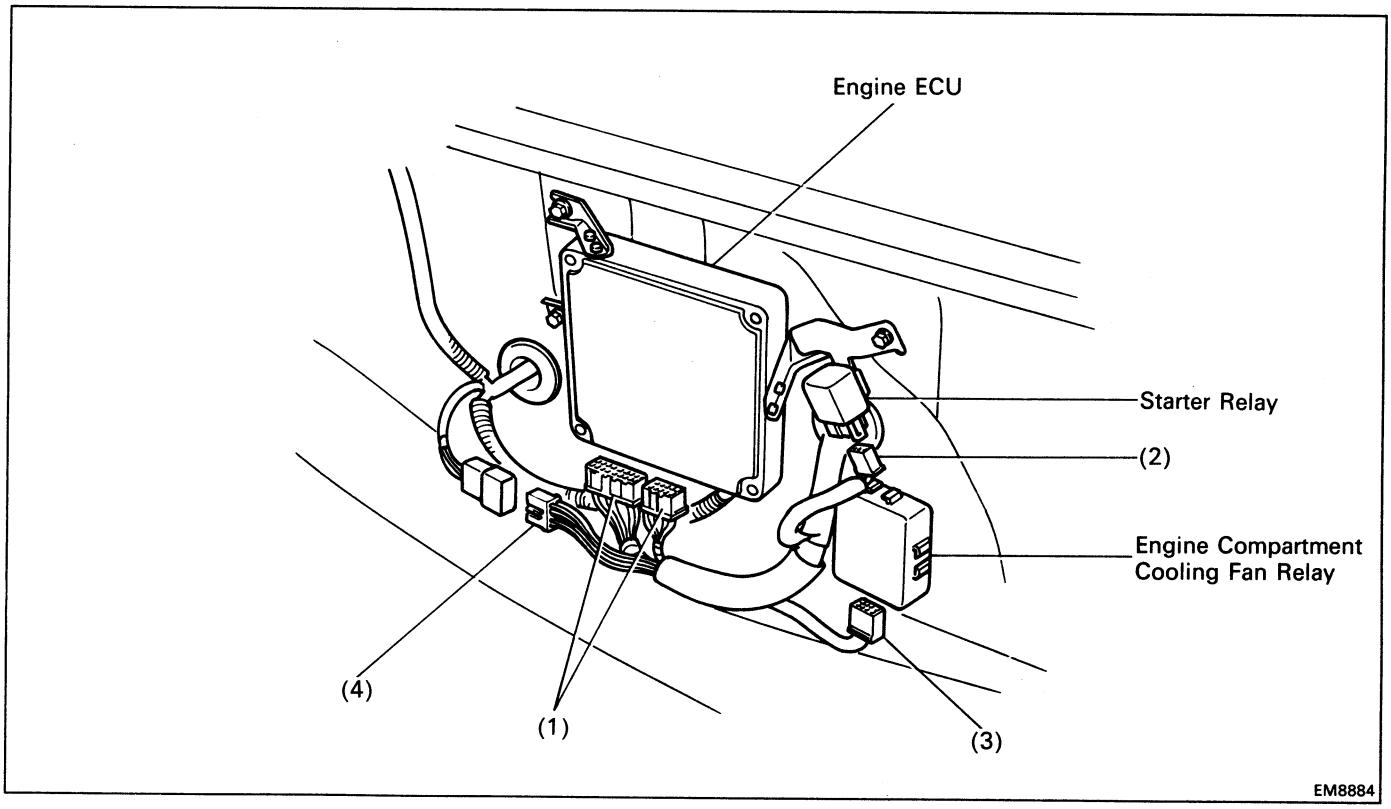

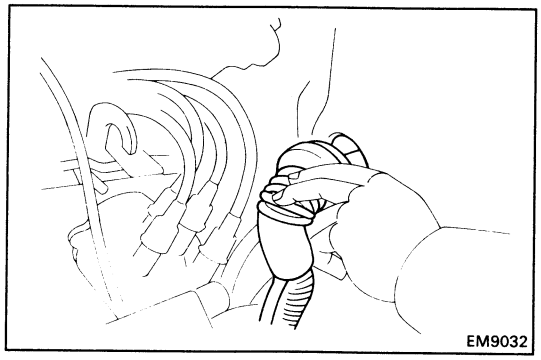

(b) Pull out the engine wire from the luggage compartment.

23. DISCONNECT STARTER CABLE

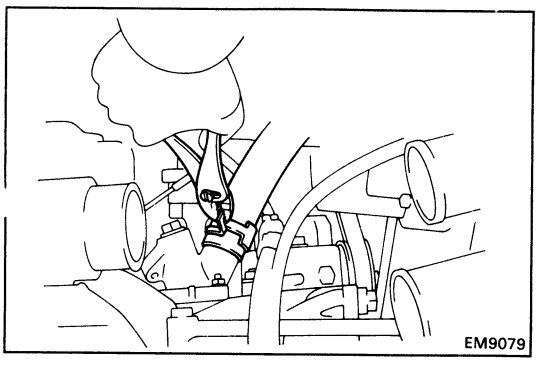

24. DISCONNECT RADIATOR HOSE FROM WATER INLET

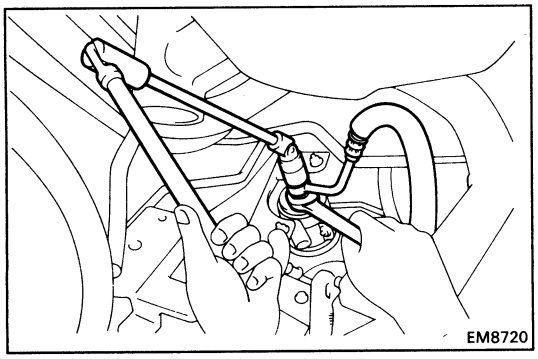

25. DISCONNECT FUEL INLET HOSE

CAUTION: Catch leaking fuel in a container.

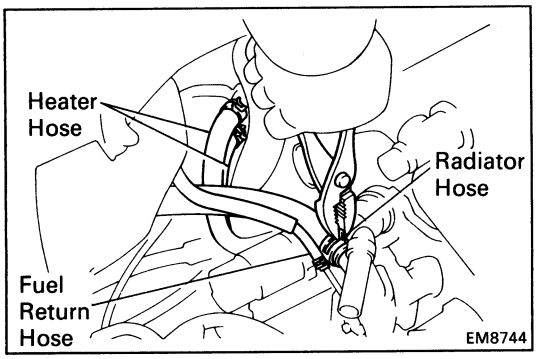

26. DISCONNECT FUEL RETURN HOSE

CAUTION: Catch leaking fuel in a container.

27. DISCONNECT RADIATOR HOSE FROM WATER OUTLET HOUSING

28. DISCONNECT HEATER HOSES

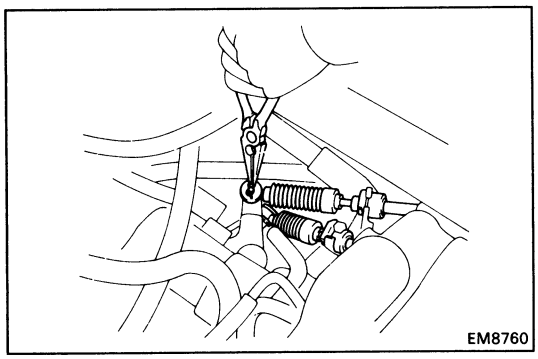

29. DISCONNECT TRANSAXLE CONTROL CABLES FROM TRANSAXLE

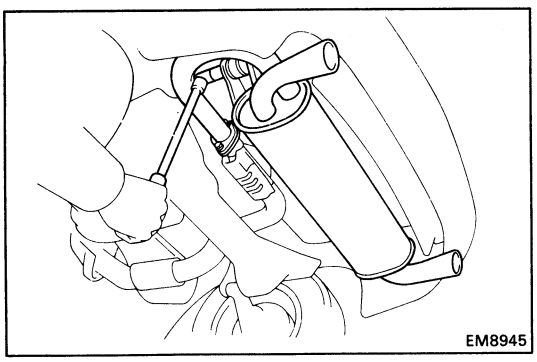

30. REMOVE TAILPIPE

(a) Remove the two bolts holding the front exhaust pipe to the tailpipe stopper bracket.

(b) Remove the two bolts holding the front exhaust pipe to the tailpipe. Remove the gasket.

(c) Remove the two through bolts holding the tailpipe to the tailpipe bracket.

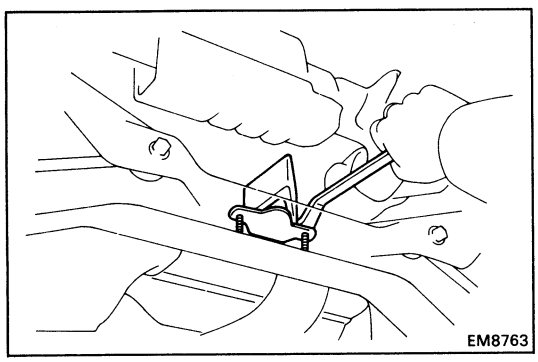

31. REMOVE FRONT EXHAUST PIPE

(a) Remove the two bolts and damper.

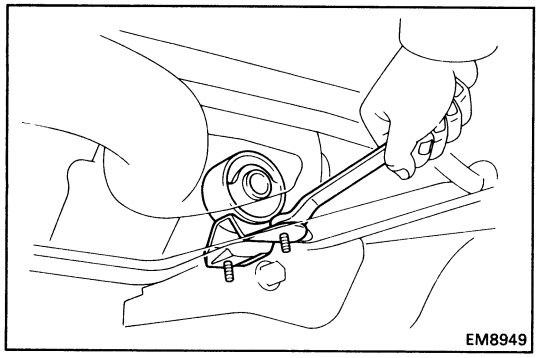

(b) Remove the two bolts and support bracket.

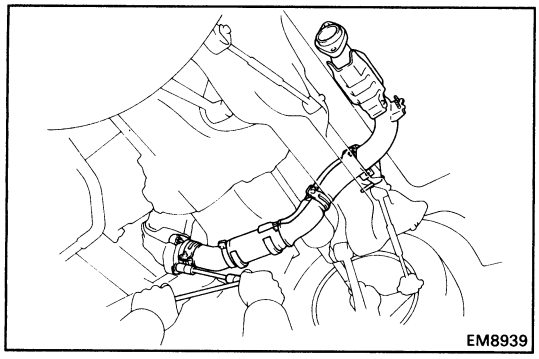

(c) Using a 14 mm deep socket wrench, remove the three nuts, exhaust pipe and gasket.

HINT: Passing the exhaust pipe rear side between the body and suspension crossmember is not easy, so follow the method shown in the illustration.

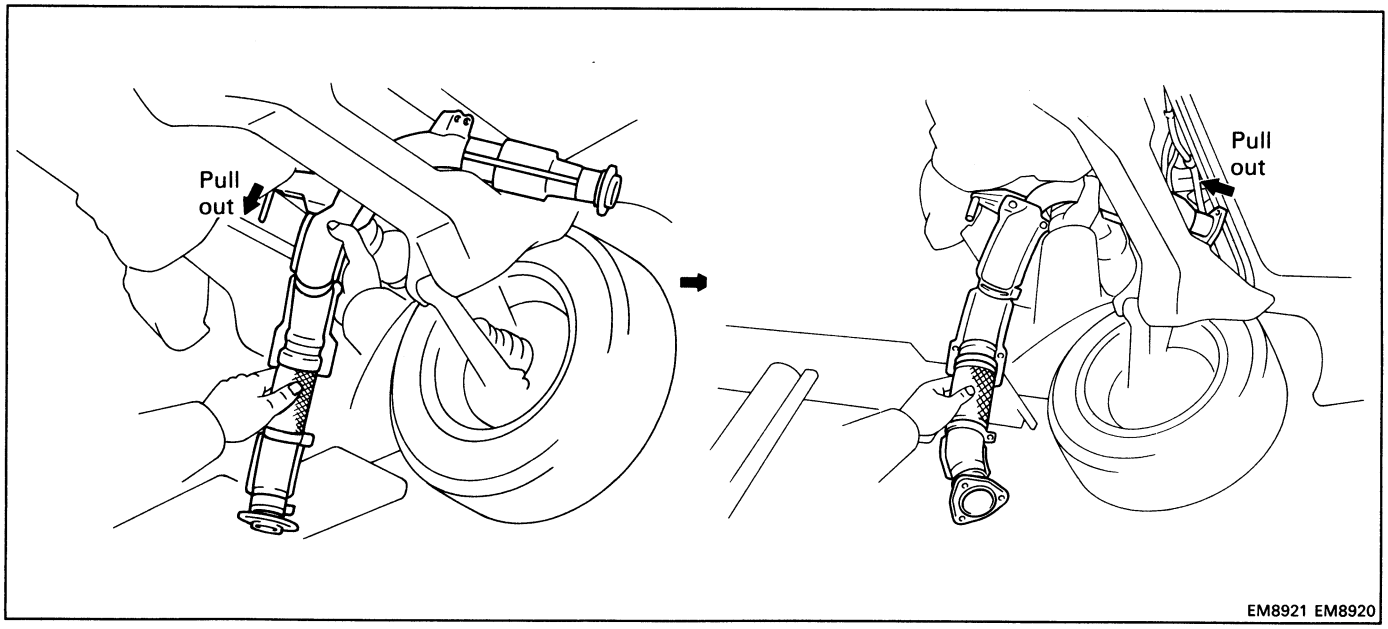

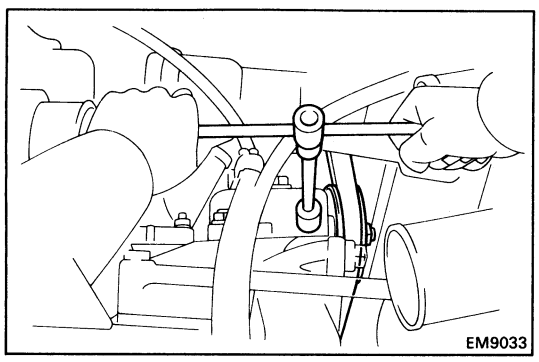

32. REMOVE ENGINE COMPARTMENT COOLING FAN (See steps 4 and 5 on page CO-34)

33. REMOVE IDLER PULLEY BRACKET AND A/C COMPRESSOR WITHOUT DISCONNECTING HOSES

(a) Disconnect the idler pulley bolt and adjusting bolt, and remove the drive belt.

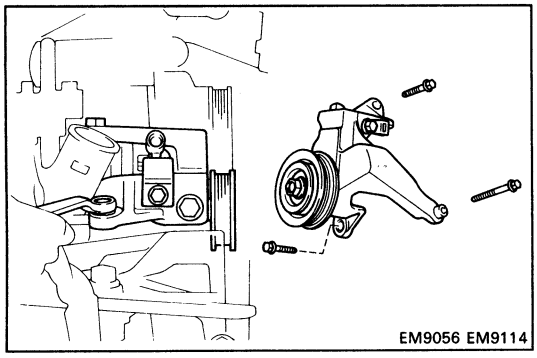

(b) Disconnect the A/C compressor connector.

(c) Remove the bolt and the wire clamp of the A/C compressor.

(d) Remove the three bolts and idler pulley bracket.

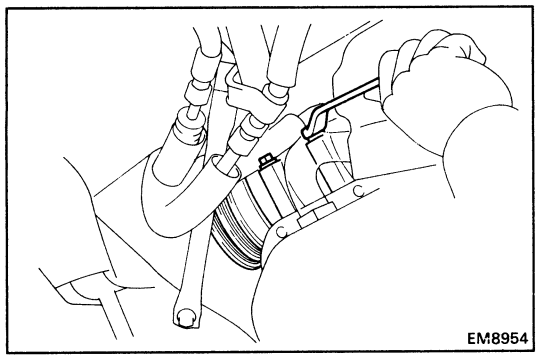

(e) Remove the two bolts, and disconnect the A/C compressor from the engine.

HINT: Put aside the compressor, and suspend it to the radiator support with a string.

34. REMOVE INTERCOOLER

(See steps 8 to 12 (a) and 13 on pages TC-21 and 22)

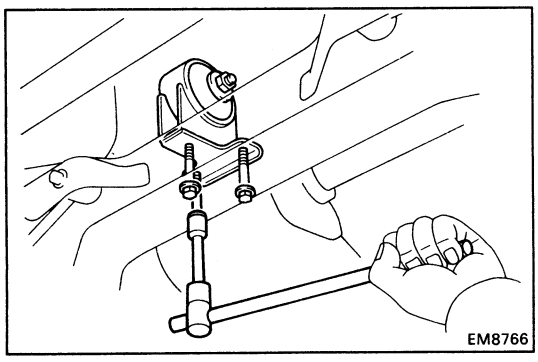

35. REMOVE REAR ENGINE MOUNTING INSULATOR

(a) Remove the through bolt holding the mounting insulator to the mounting bracket.

(b) Remove the three bolts and mounting insulator.

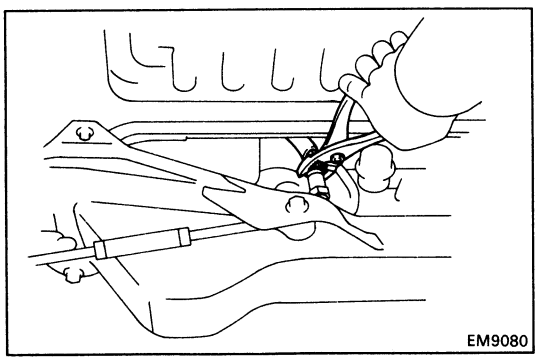

36. DISCONNECT SPEEDOMETER CABLE

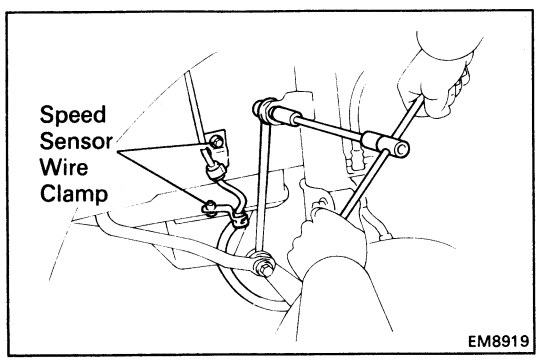

37. REMOVE REAR SUSPENSION CROSSMEMBER

(a) Remove the nut, and disconnect the stabilizer link from the shock absorber.

(b) Remove the bolt, and disconnect the wire clamp of the ABS speed sensor from the body.

(c) Remove the lower suspension arms.
(See page SA-76)

(d) Remove the drive shafts.
(See page SA-53 and 54)

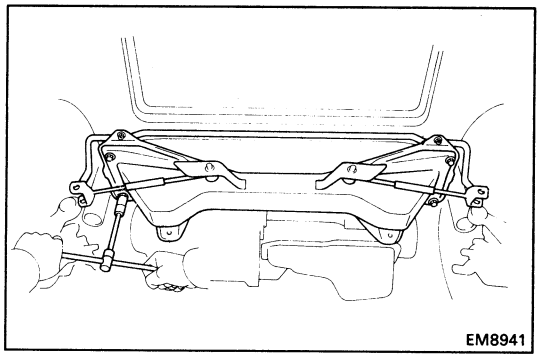

(e) Remove the four bolts and lower crossmember.

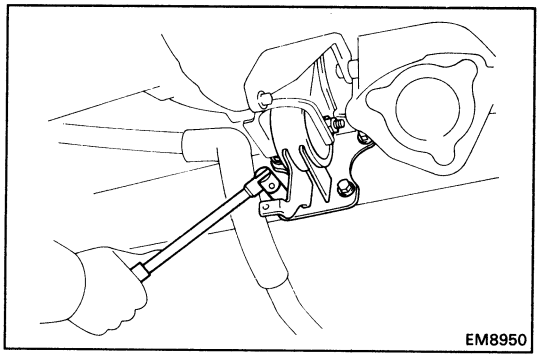

38. REMOVE FRONT ENGINE MOUNTING INSULATOR

(a) Remove the through bolt and nut holding the mounting insulator to the mounting bracket.

(b) Remove the four bolts and mounting insulator.

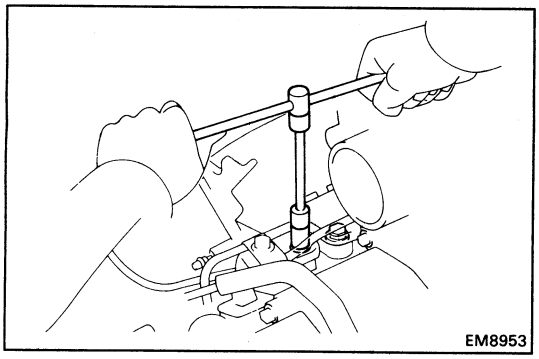

39. REMOVE FRONT ENGINE MOUNTING BRACKET AND CLUTCH RELEASE CYLINDER

(a) Remove the bolt and nut holding the clutch release cylinder to the transaxle.

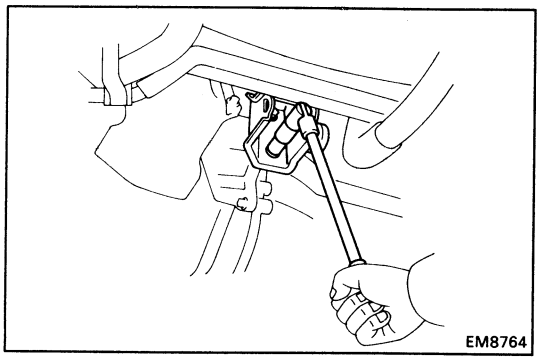

(b) Remove the two bolts and mounting bracket.

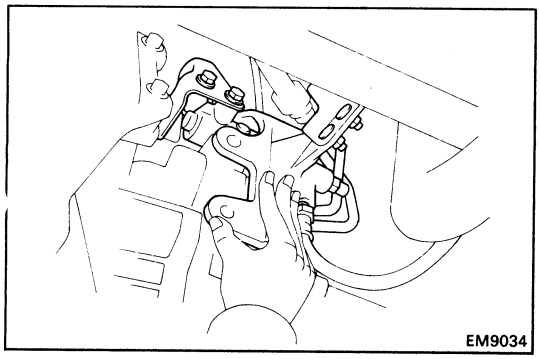

(c) Disconnect the clutch release cylinder without disconnecting the tubes.

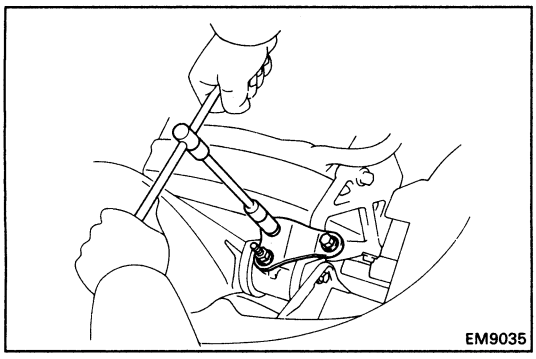

40. REMOVE RH ENGINE MOUNTING STAY

Remove the two bolts, nut and mounting stay.

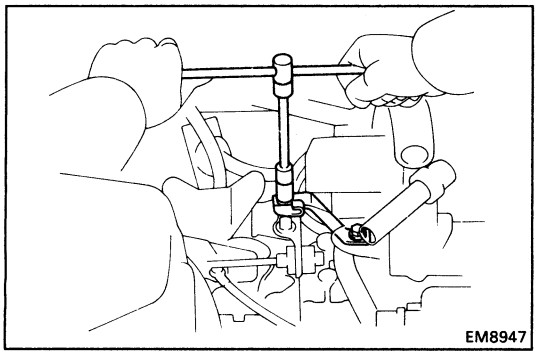

41. REMOVE LH ENGINE MOUNTING STAY

Remove the two bolts speedometer cable clamp and mounting stay.

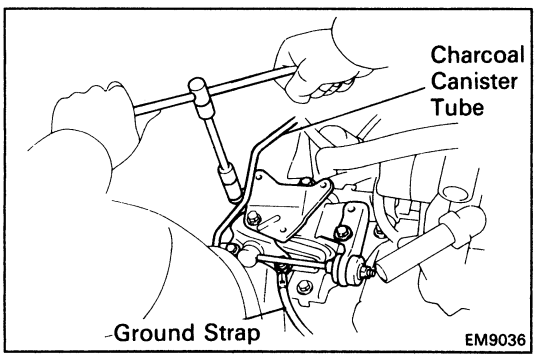

42. REMOVE LATERAL CONTROL ROD AND AIR CLEANER CASE BRACKET

Remove the five bolts, the control rod and case bracket. Disconnect the charcoal canister tube and ground strap (from the transaxle).

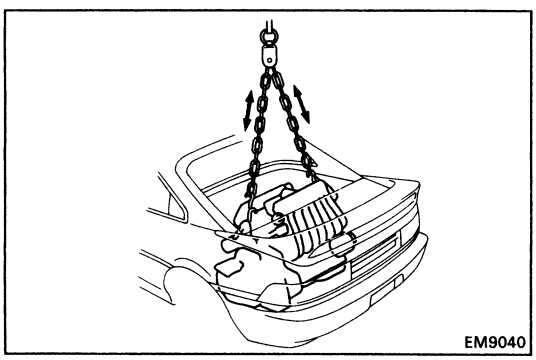

43. REMOVE ENGINE AND TRANSAXLE ASSEMBLY FROM VEHICLE

(a) Attach the engine chain hoist to the engine hangers.

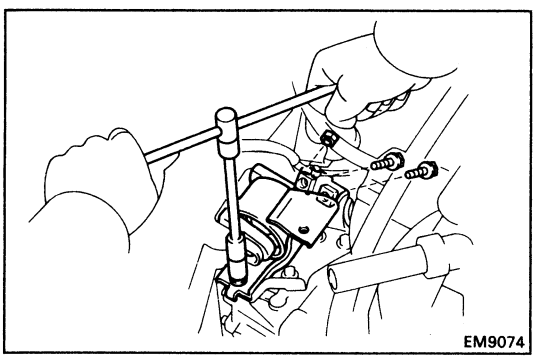

(b) Remove the through bolt, nut, three bolts and LH mounting insulator.

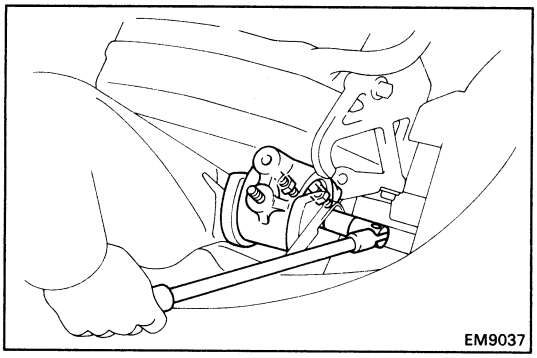

(c) Remove the through bolt, two nuts and RH mounting insulator.

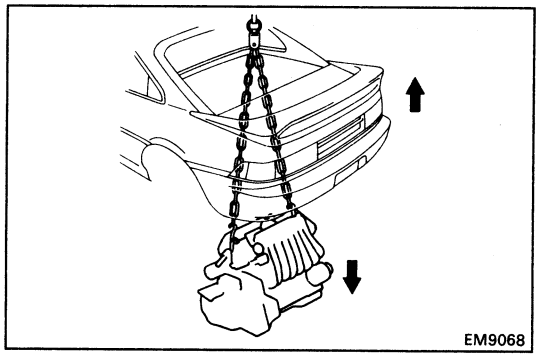

(d) Lower the engine out of the vehicle slowly and carefully, and raise the engine.

HINT: Make sure the engine is clear of all wiring, hoses and cables.

(e) Place the engine and transaxle assembly onto the stand.

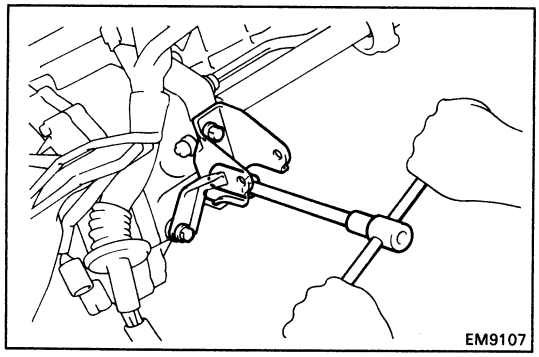

44. REMOVE ENGINE REAR ENGINE MOUNTING BRACKET

Remove the six bolts and mounting bracket.

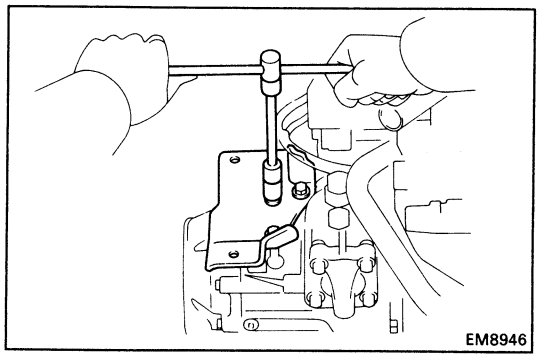

45. REMOVE LH ENGINE MOUNTING BRACKET

Remove the three bolts and mounting bracket.

46. REMOVE STARTER (See page ST-4)

47. SEPARATE ENGINE AND TRANSAXLE (See pages MT-5 and 6)

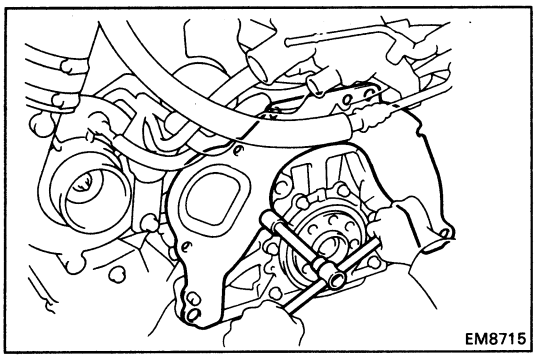

PREPARATION FOR DISASSEMBLY

1. **REMOVE CLUTCH COVER AND DISC**
2. **REMOVE FLYWHEEL**
3. **REMOVE REAR END PLATE**
   Remove the bolt and end plate.
4. **INSTALL ENGINE TO ENGINE STAND FOR DISASSEMBLY**

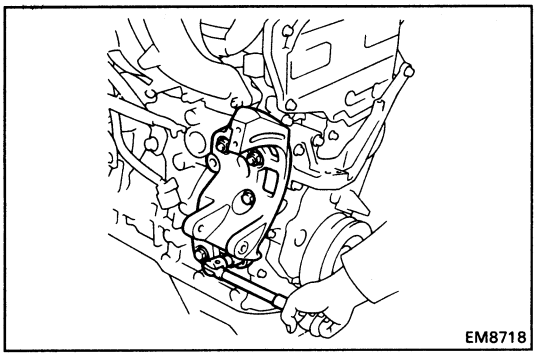

5. **REMOVE ALTERNATOR (See page CH-6)**
6. **REMOVE ALTERNATOR BRACKET**
   Remove the three bolts, two nuts and mounting bracket.

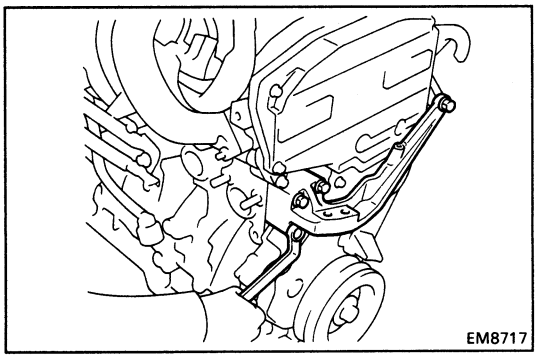

7. **REMOVE RH ENGINE MOUNTING BRACKET**
   Remove the four bolts and mounting bracket.
8. **REMOVE TIMING BELT AND PULLEYS (See pages EM-28 to 32)**
9. **REMOVE TURBOCHARGER (See pages TC-9 to 12)**
10. **REMOVE CYLINDER HEAD (See pages EM-63 to 71)**
11. **REMOVE WATER PUMP (See page CO-11)**
12. **REMOVE OIL PAN AND OIL PUMP (See pages LU-11 and 12)**
13. **REMOVE OIL FILTER (See page LU-7)**
14. **REMOVE OIL COOLER (See page LU-19)**

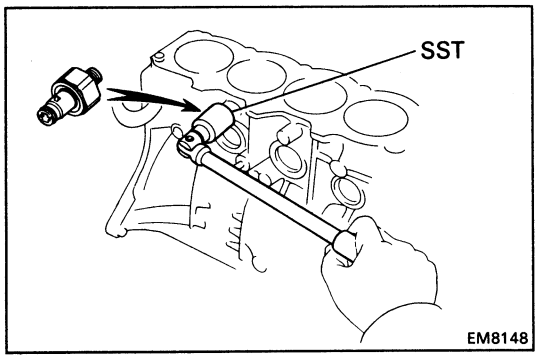

15. **REMOVE KNOCK SENSOR**
    Using SST, remove the knock sensor.
    SST 09816-30010

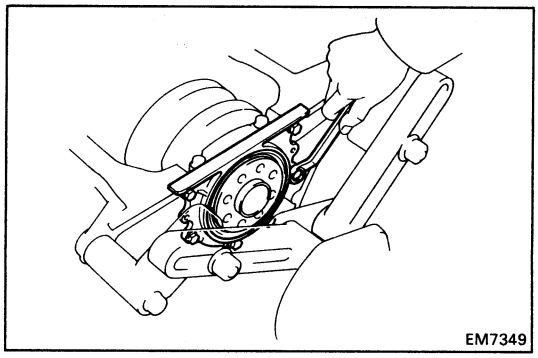

DISASSEMBLY OF CYLINDER BLOCK

(See page EM-133)

1. **REMOVE REAR OIL SEAL RETAINER**

Remove the six bolts, retainer and gasket.

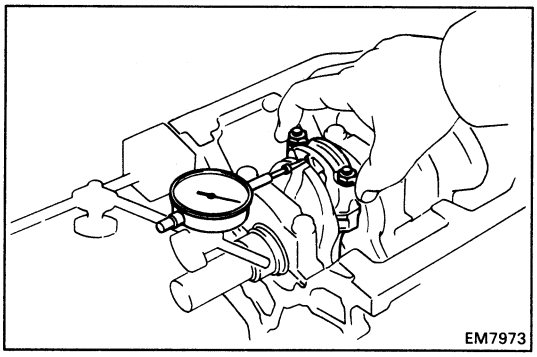

2. **CHECK CONNECTING ROD THRUST CLEARANCE**

Using a dial indicator, measure the thrust clearance while moving the connecting rod back and forth.

Standard thrust clearance: **0.160 – 0.312 mm (0.0063 – 0.0123 in.)**

Maximum thrust clearance: **0.35 mm (0.0138 in.)**

If the thrust clearance is greater than maximum, replace the connecting rod assembly. If necessary, replace the crankshaft.

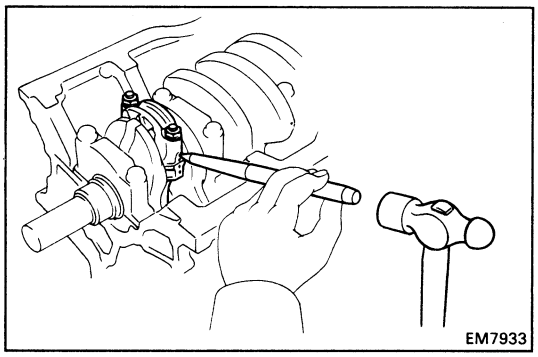

3. **REMOVE CONNECTING ROD CAPS AND CHECK OIL CLEARANCE**

(a) Using a punch or numbering stamp, place the matchmarks on the connecting rod and cap to ensure correct reassembly.

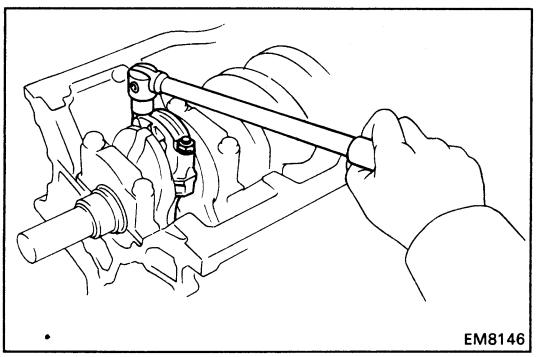

(b) Remove the connecting rod cap nuts.

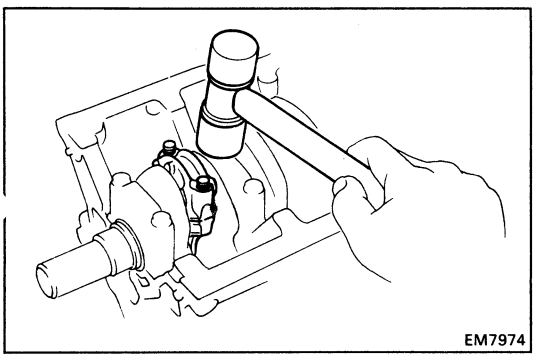

(c) Using a plastic-faced hammer, lightly tap the connecting rod bolts and lift off the connecting rod cap.

HINT: Keep the lower bearing inserted with the connecting cap.

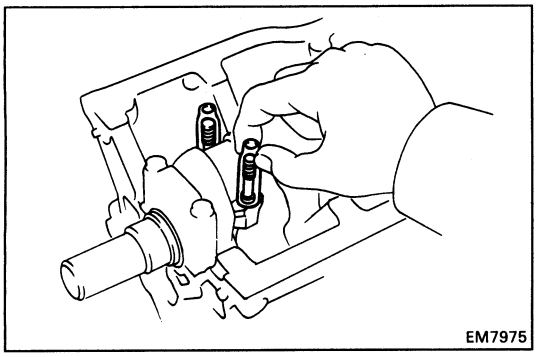

(d) Cover the connecting rod bolts with a short piece of hose to protect the crankshaft from damage.

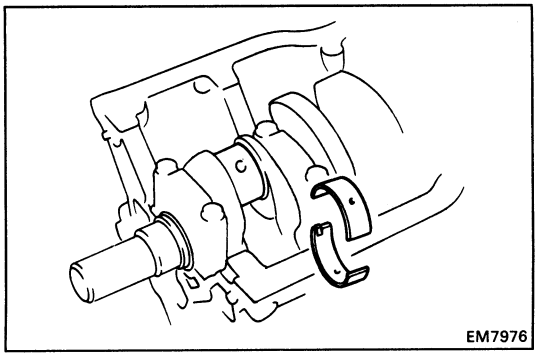

(e) Clean crank pin and bearing.

(f) Check the crank pin and bearing for pitting and scratches.

If the crank pin or bearing is damaged, replace the bearings. If necessary, grind or replace the crankshaft.

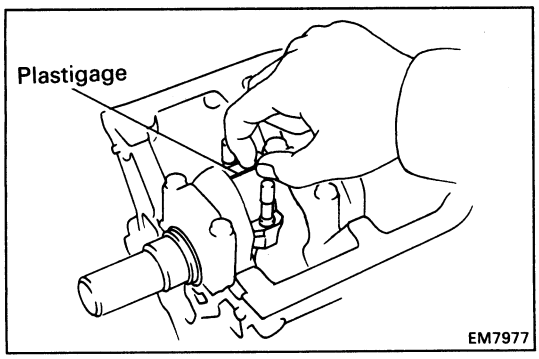

(g) Lay a strip of Plastigage across the crank pin.

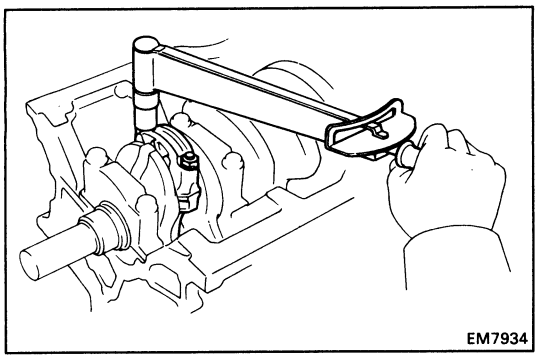

(h) Install the connecting rod cap.
(See step 7 on page EM-166)

Torque: 680 kg-cm (49 ft-lb, 67 N·m)

NOTICE: Do not turn the crankshaft.

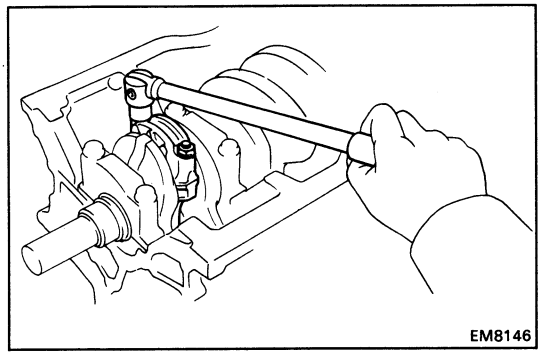

(i) Remove the connecting rod cap.
(See procedures (b) and (c) above)

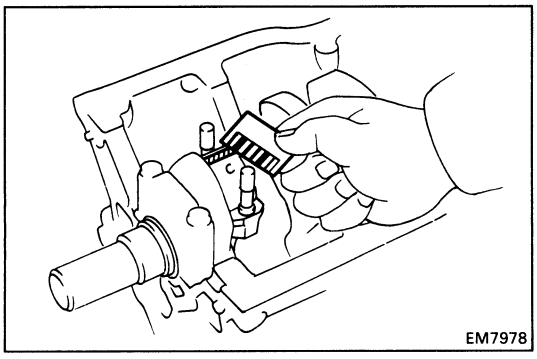
EM7978

(j) Measure the Plastigage at its widest point.

Standard oil clearance:

STD	**0.024 – 0.055 mm (0.0009 – 0.0022 in.)**
U/S 0.25	**0.023 – 0.069 mm (0.0009 – 0.0027 in.)**

Maximum oil clearance: 0.08 mm (0.0031 in.)

If the oil clearance is greater than maximum, replace the bearings. If necessary, grind or replace the crankshaft.

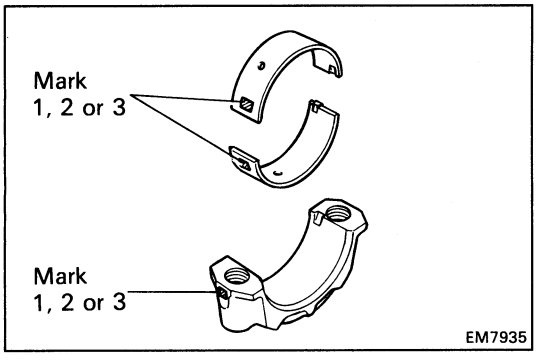

EM7935

HINT: If using a standard bearing, replace it with one having the same number marked on the connecting rod cap. There are three sizes of standard bearings, marked "1", "2" and "3" accordingly.

Standard sized bearing center wall thickness:

Mark "1"	**1.484 – 1.488 mm (0.0584 – 0.0586 in.)**
Mark "2"	**1.488 – 1.492 mm (0.0586 – 0.0587 in.)**
Mark "3"	**1.492 – 1.496 mm (0.0587 – 0.0589 in.)**

(k) Completely remove the Plastigage.

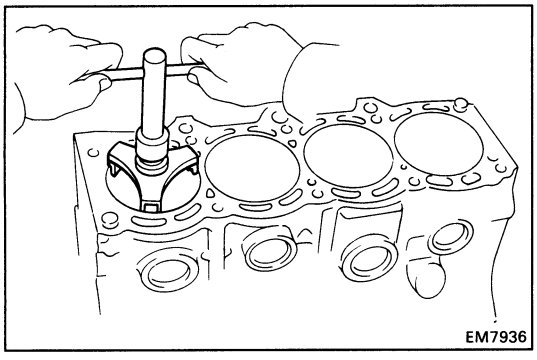
EM7936

4. REMOVE PISTON AND CONNECTING ROD ASSEMBLIES

(a) Using a ridge reamer, remove all the carbon from the top of the cylinder.

(b) Cover the connecting rod bolts.
(See page EM-146)

(c) Push the piston, connecting rod assembly and upper bearing through the top of the cylinder block.

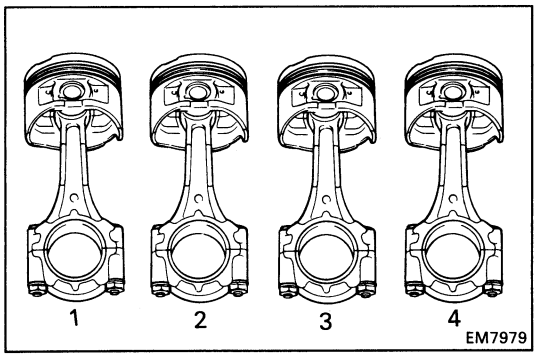

EM7979

HINT:
- Keep the bearings, connecting rod and cap together.
- Arrange the piston and connecting rod assemblies in correct order.

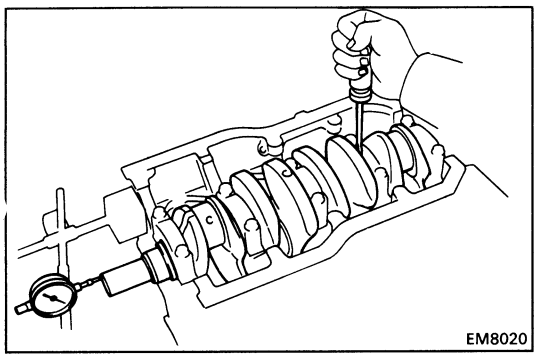
EM8020

5. CHECK CRANKSHAFT THRUST CLEARANCE

Using a dial indicator, measure the thrust clearance while prying the crankshaft back and forth with a screwdriver.

Standard thrust clearance: 0.020 – 0.220 mm (0.0008 – 0.0087 in.)

Maximum thrust clearance: 0.30 mm (0.0118 in.

If the thrust clearance is greater than maximum, replace the thrust washers as a set.

Thrust washer thickness: 2.440 – 2.490 mm (0.0961 – 0.0980 in.)

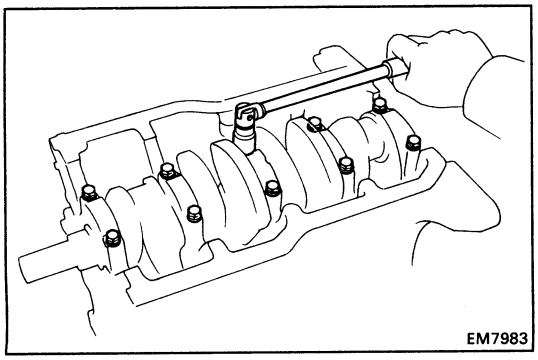
EM7983

6. REMOVE MAIN BEARING CAPS AND CHECK OIL CLEARANCE

(a) Remove the main bearing cap bolts.

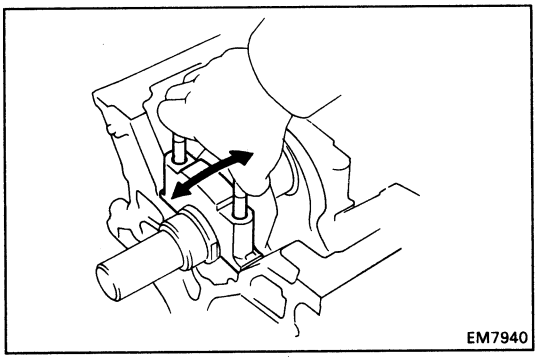
EM7940

(b) Using the removed main bearing cap bolts, pry the main bearing cap back and forth, and remove the main bearing caps, lower bearings and lower thrust washers (No.3 main bearing cap only).

HINT:
- Keep the lower bearing and main bearing cap together.
- Arrange the main bearing caps and lower thrust washers in correct order.

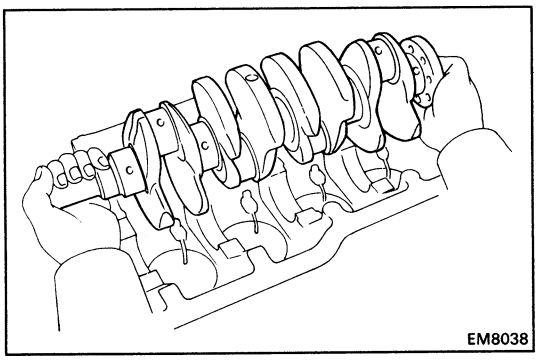
EM8038

(c) Lift out the crankshaft.

HINT: Keep the upper bearing and upper thrust washers together with the cylinder block.

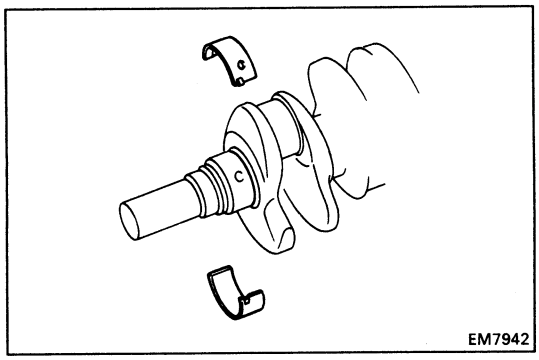
EM7942

(d) Clean each main journal and bearing.

(e) Check each main journal and bearing for pitting and scratches.

If the journal or bearing is damaged, replace the bearings. If necessary, grind or replace the crankshaft.

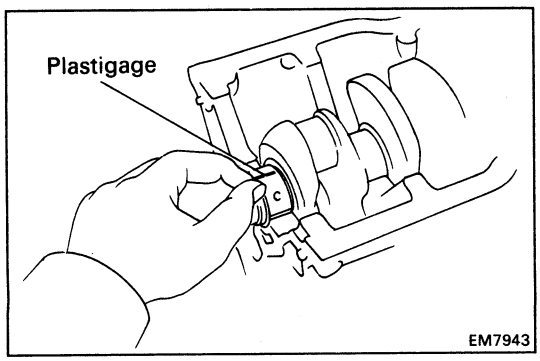

EM7943

(f) Place the crankshaft on the cylinder block.

(g) Lay a strip of Plastigage across each journal.

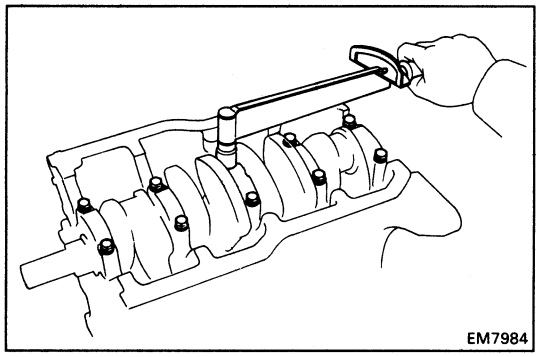

(h) Install the main bearing caps.
(See step 5 on page EM-165)

Torque: 600 kg-cm (43 ft-lb, 59 N·m)

NOTICE: Do not turn the crankshaft.

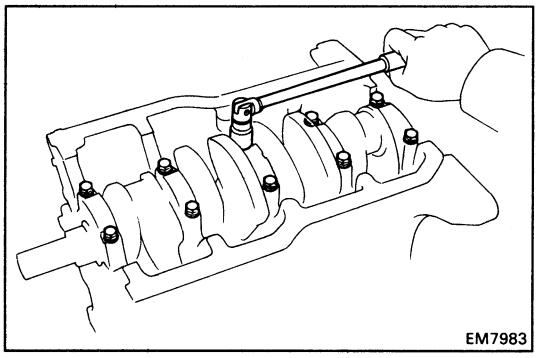

(i) Remove the main bearing caps.
(See procedures (a) and (b) above)

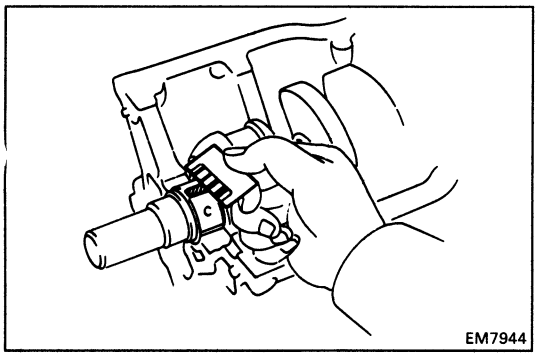

(j) Measure the Plastigage at its widest point.

Standard clearance:

No.3	**STD**	**0.025 – 0.044 mm (0.0010 – 0.0017 in.)**
	U/S 0.25	**0.021 – 0.061 mm (0.0008 – 0.0024 in.)**
Others	**STD**	**0.015 – 0.034 mm (0.0006 – 0.0013 in.)**
	U/S 0.25	**0.029 – 0.069 mm (0.0011 – 0.0027 in.)**

Maximum clearance: 0.08 mm (0.0031 in.)

HINT: If replacing the cylinder block subassembly, the bearing standard clearance will be:

No.3	**0.027 – 0.054 mm (0.0011 – 0.0021 in.)**
Others	**0.017 – 0.044 mm (0.0007 – 0.0017 in.)**

If the oil clearance is greater than maximum, replace the bearings. If necessary, grind or replace the crankshaft.

HINT: If using a standard bearing, replace it with one having the same number. If the number of the bearing cannot be determined, select the correct bearing by adding together the numbers imprinted on the cylinder block and crankshaft, then select the bearing with the same number as the total. There are five sizes of standard bearings, marked "1," "2," "3," "4" and "5" accordingly.

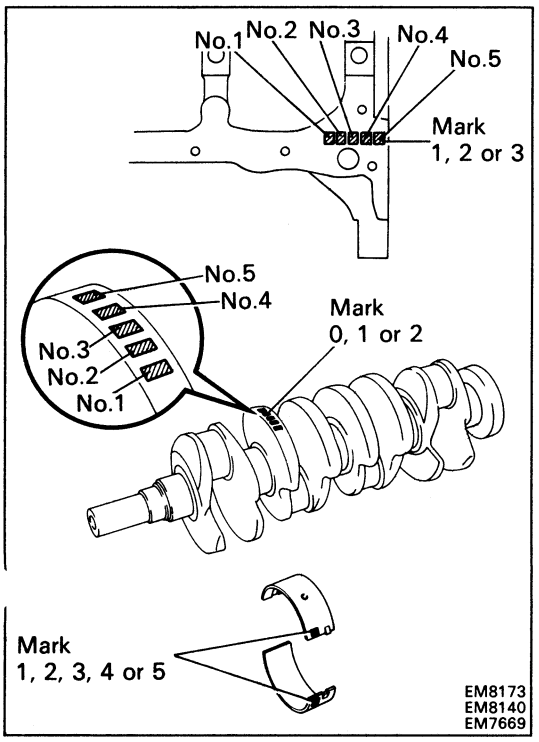

	Number marked								
Cylinder block	1			2			3		
Crankshaft	0	1	2	0	1	2	0	1	2
Bearing	1	2	3	1	2	3	1	2	3

EXAMPLE: Cylinder block "2" + Crankshaft "1" = Bearing "3"

(Reference)
Cylinder block main journal bore diameter:

Mark "1"	59.020 – 59.026 mm (2.3236 – 2.3239 in.)
Mark "2"	59.026 – 59.032 mm (2.3239 – 2.3241 in.)
Mark "3"	59.032 – 59.038 mm (2.3241 – 2.3243 in.)

Crankshaft journal diameter:

Mark "0"	54.998 – 55.003 mm (2.1653 – 2.1655 in.)
Mark "1"	54.993 – 54.998 mm (2.1651 – 2.1653 in.)
Mark "2"	54.988 – 54.993 mm (2.1649 – 2.1651 in.)

Standard sized bearing center wall thickness:

No.3	Mark "1"	1.992 – 1.995 mm (0.0784 – 0.0785 in.)
	Mark "2"	1.995 – 1.998 mm (0.0785 – 0.0787 in.)
	Mark "3"	1.998 – 2.001 mm (0.0787 – 0.0788 in.)
	Mark "4"	2.001 – 2.004 mm (0.0788 – 0.0789 in.)
	Mark "5"	2.004 – 2.007 mm (0.0789 – 0.0790 in.)
Others	Mark "1"	1.997 – 2.000 mm (0.0786 – 0.0787 in.)
	Mark "2"	2.000 – 2.003 mm (0.0787 – 0.0789 in.)
	Mark "3"	2.003 – 2.006 mm (0.0789 – 0.0790 in.)
	Mark "4"	2.006 – 2.009 mm (0.0790 – 0.0791 in.)
	Mark "5"	2.009 – 2.012 mm (0.0791 – 0.0792 in.)

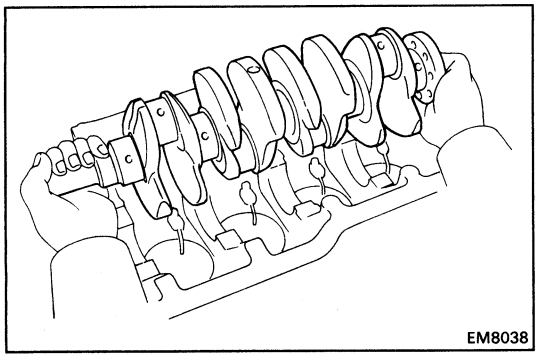
EM8038

(k) Completely remove the Plastigage.

7. REMOVE CRANKSHAFT

(a) Lift out the crankshaft.

(b) Remove the upper bearings and upper thrust washers from the cylinder block.

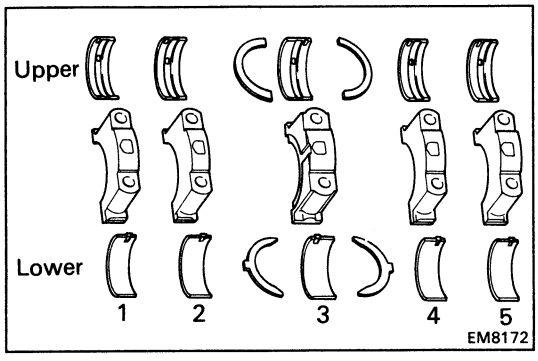

HINT: Arrange the main bearing caps, bearings and thrust washers in correct order.

8. REMOVE OIL NOZZLES (See page LU-26)

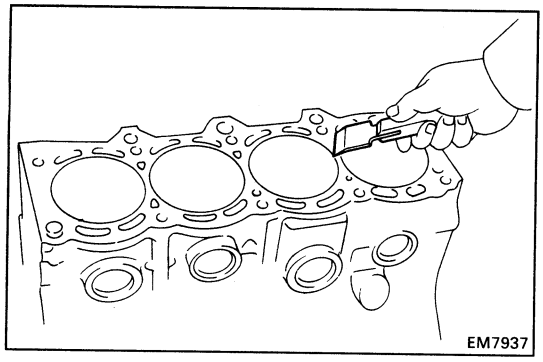

INSPECTION OF CYLINDER BLOCK

1. CLEAN CYLINDER BLOCK

A. Remove gasket material

Using a gasket scraper, remove all the gasket material from the top surface of the cylinder block.

B. Clean cylinder block

Using a soft brush and solvent, thoroughly clean the cylinder block.

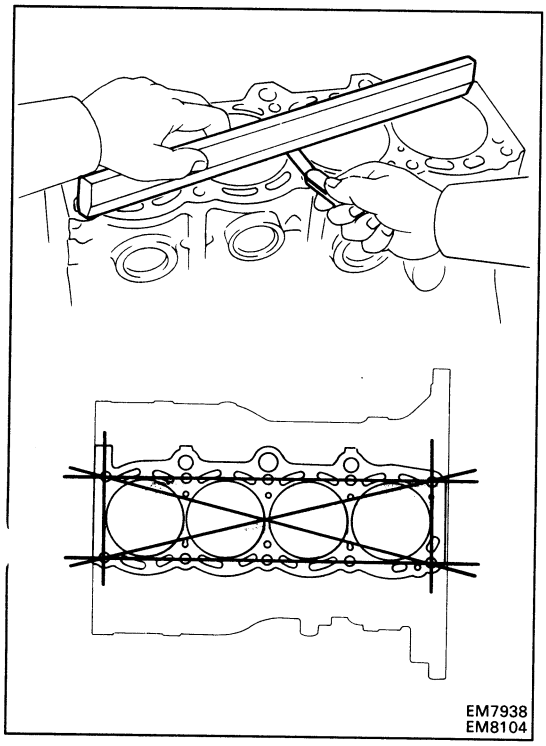

2. INSPECT TOP SURFACE OF CYLINDER BLOCK FOR FLATNESS

Using a precision straight edge and feeler gauge, measure the surfaces contacting the cylinder head gasket for warpage.

Maximum warpage: 0.05 mm (0.0020 in.)

If warpage is greater than maximum, replace the cylinder block.

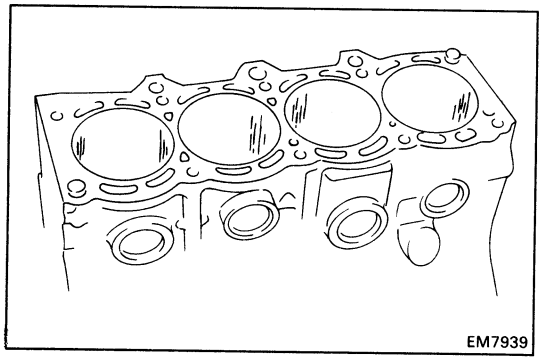

3. INSPECT CYLINDER FOR VERTICAL SCRATCHES

Visually check the cylinder for vertical scratches.

If deep scratches are present, replace the cylinder block.

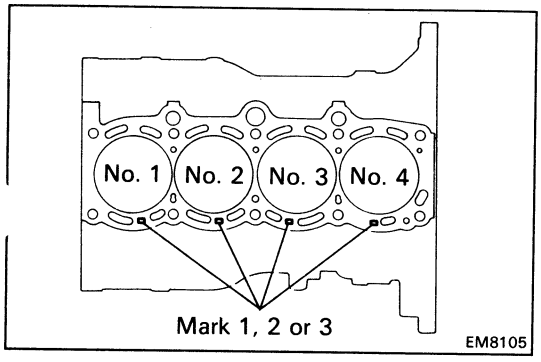

4. INSPECT CYLINDER BORE DIAMETER

HINT: There are three sizes of the standard cylinder bore diameter, marked "1", "2" and "3" accordingly. The mark is stamped on the top of the cylinder block.

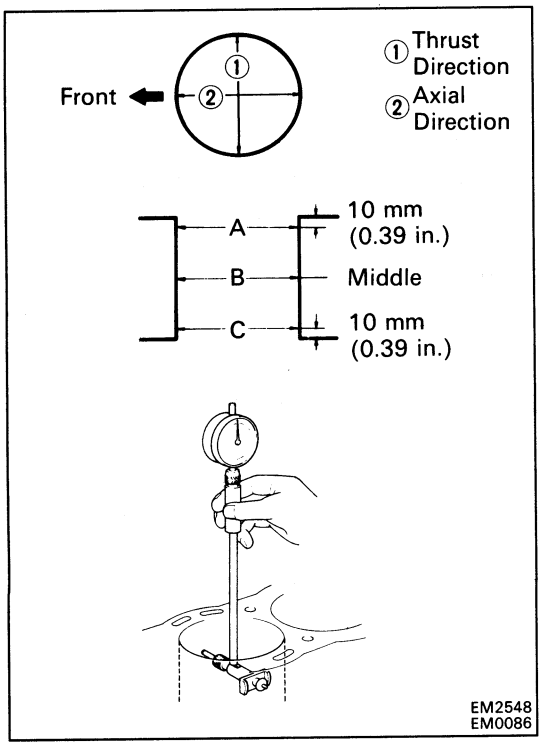

Using a cylinder gauge, measure the cylinder bore diameter at positions A, B and C in the thrust axial directions.

Standard diameter:

Mark "1"	**86.000 – 86.010 mm (3.3858 – 3.3862 in.)**
Mark "2"	**86.010 – 86.020 mm (3.3862 – 3.3866 in.)**
Mark "3"	**86.020 – 86.030 mm (3.3866 – 3.3870 in.)**

Maximum diameter: **86.23 mm (3.3949 in.)**

If the diameter is greater than maximum, replace the cylinder block.

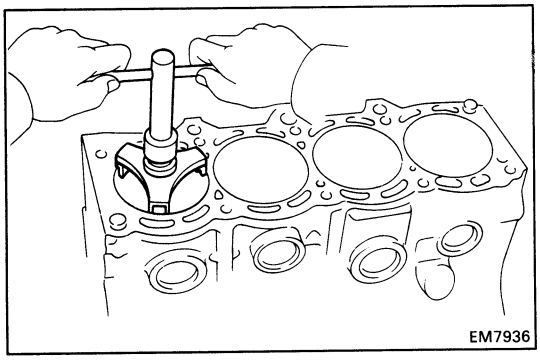

5. REMOVE CYLINDER RIDGE

If the wear is less than 0.2 mm (0.008 in.), using a ridge reamer, grind the top of the cylinder.

DISASSEMBLY OF PISTON AND CONNECTING ROD ASSEMBLIES

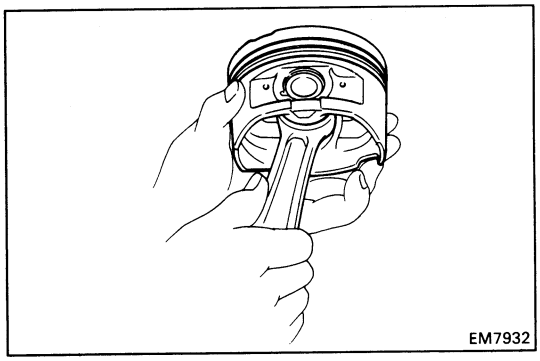

1. CHECK FIT BETWEEN PISTON AND PISTON PIN

Try to move the piston back and forth on the piston pin.

If any movement is felt, replace the piston and pin as a set.

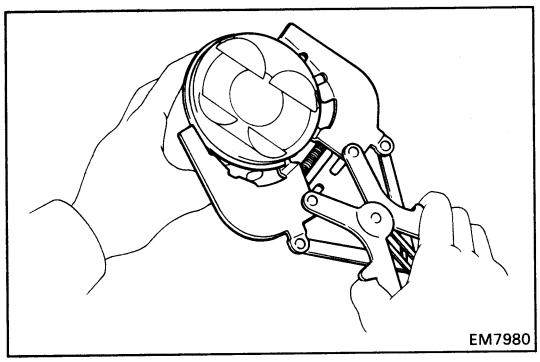

2. REMOVE PISTON RINGS

(a) Using a piston ring expander, remove the two compression rings.

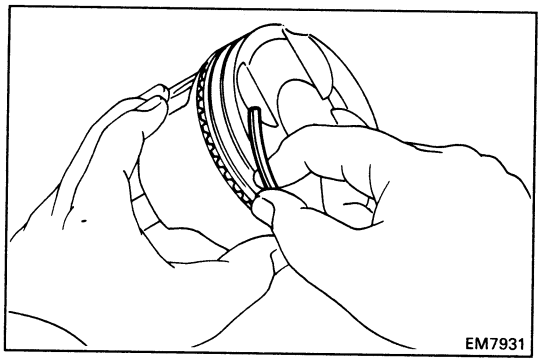

(b) Remove the two side rails and oil ring expander by hand.

HINT: Arrange the rings in correct order only.

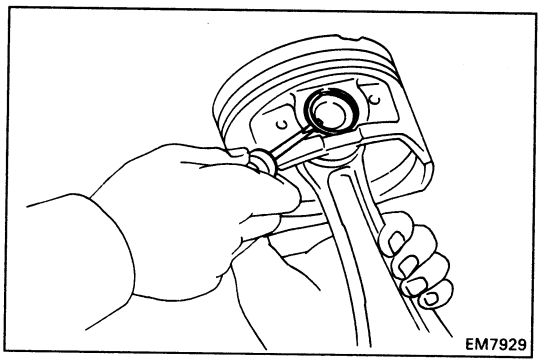

3. DISCONNECT CONNECTING ROD FROM PISTON

(a) Using a small screwdriver, pry out the two snap rings.

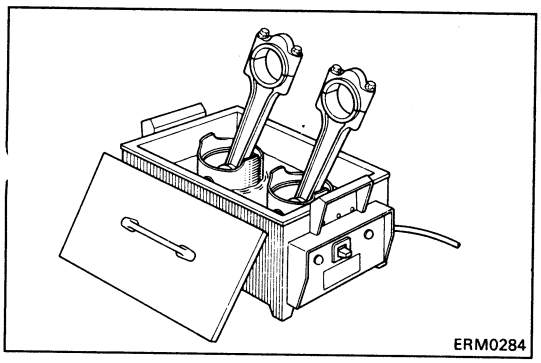

(b) Gradually heat the piston to 80 – 90°C (176 – 194°F).

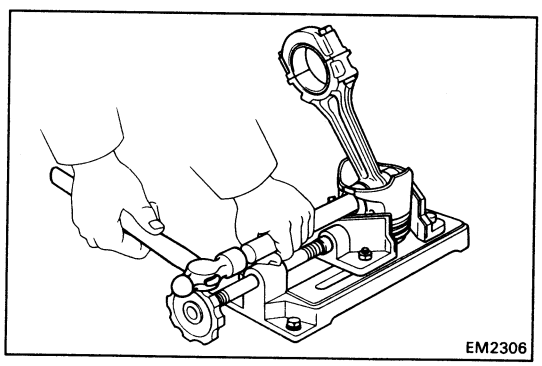

(c) Using plastic-faced hammer and brass bar, lightly tap out the piston pin and remove the connecting rod.

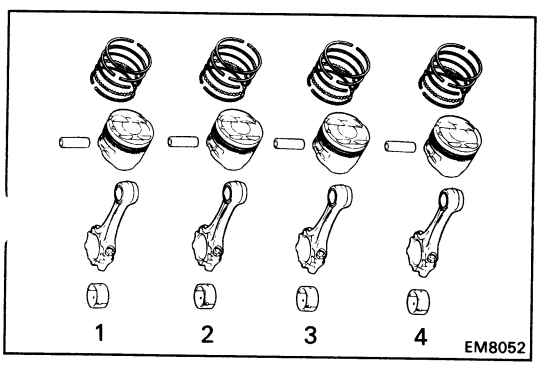

HINT:

- The piston and pin are a matched set.
- Arrange the pistons, pins, rings, connecting rods and bearings in correct order.

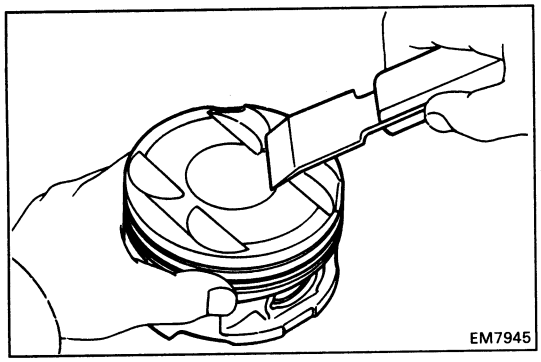

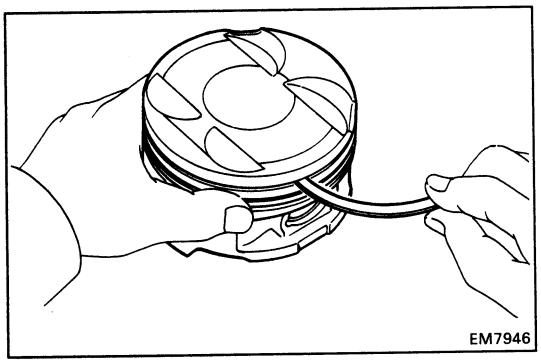

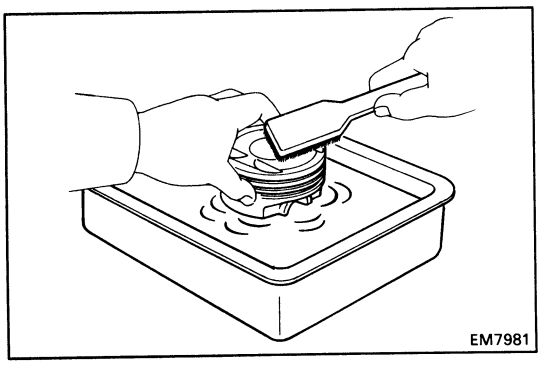

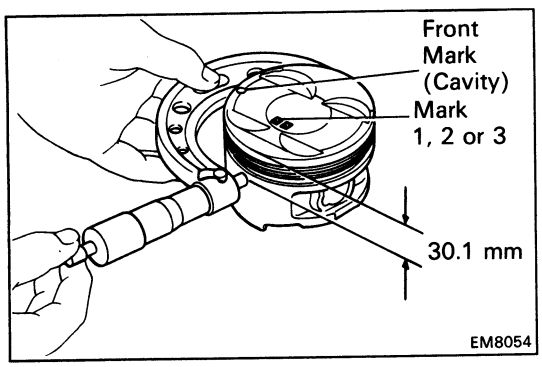

INSPECTION OF PISTON AND CONNECTING ROD ASSEMBLIES

1. CLEAN PISTON

(a) Using a gasket scraper, remove the carbon from the piston top.

(b) Using a groove cleaner or broken ring, clean the piston ring grooves.

(c) Using solvent and a brush, thoroughly clean the piston.

NOTICE: Do not use a wire brush.

2. INSPECT PISTON

A. Inspect piston oil clearance

HINT: There are three sizes of the standard piston diameter, marked "1", "2" and "3" accordingly. The mark is stamped on the piston top.

(a) Using a micrometer, measure the piston diameter at right angles to the piston pin center line, 30.1 mm (1.185 in.) from the piston head.

Piston diameter:

Mark "1"	**85.920 – 85.930 mm (3.3827 – 3.3831 in.)**
Mark "2"	**85.930 – 85.940 mm (3.3831 – 3.3835 in.)**
Mark "3"	**85.940 – 85.950 mm (3.3835 – 3.3839 in.)**

(b) Measure the cylinder bore diameter in the thrust directions. (See step 4 on page EM-152)

(c) Subtract the piston diameter measurement from the cylinder bore diameter measurement.

Standard oil clearance: **0.070 – 0.090 mm (0.0028 – 0.0035 in.)**

Maximum oil clearance: **0.110 mm (0.0043 in.)**

If the oil clearance is greater than maximum, replace all the four pistons. If necessary, replace the cylinder block.

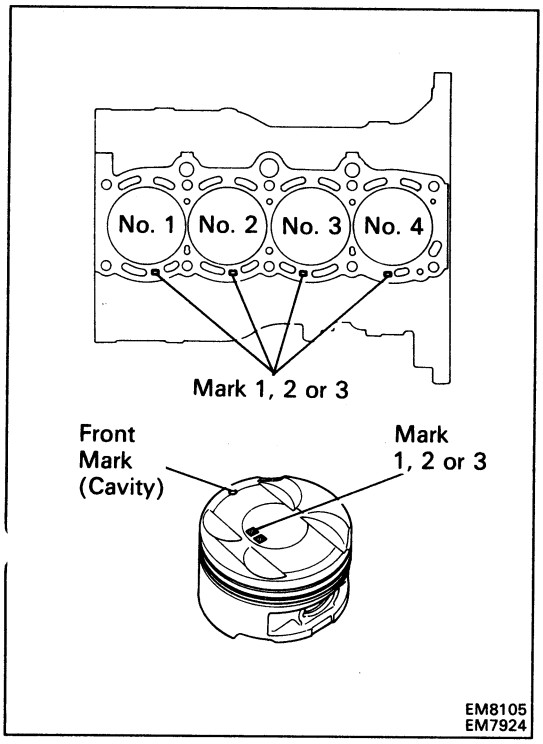

HINT (Use new cylinder block): Use a piston with the same number mark as the cylinder bore diameter marked on the cylinder block.

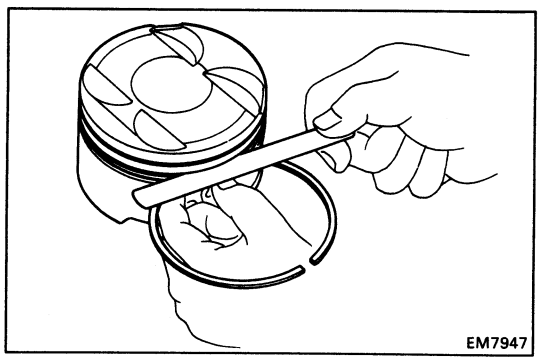

B. Inspect piston ring groove clearance

Using a feeler gauge, measure the clearance between new piston ring and the wall of the piston ring groove.

Ring groove clearance:

No.1 0.040 – 0.080 mm (0.0016 – 0.0031 in.)

No.2 0.030 – 0.070 mm (0.0012 – 0.0028 in.)

If the clearance is greater than maximum, replace the piston.

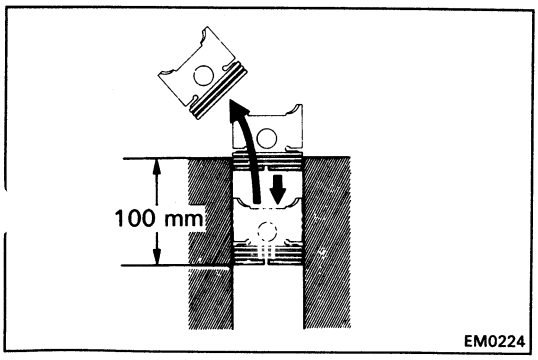

C. Inspect piston ring end gap

(a) Insert the piston ring into the cylinder bore.

(b) Using a piston, push the piston ring a little beyond the bottom of the ring travel, 115 mm (4.53 in.) from the top of the cylinder block.

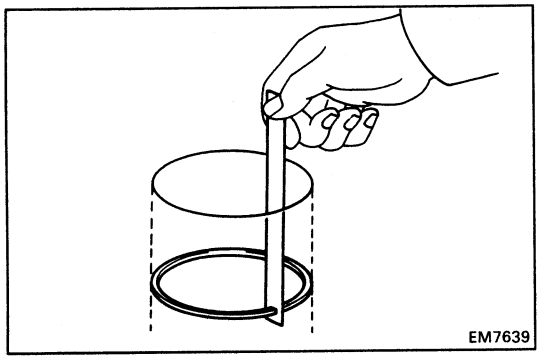
EM7639

(c) Using a feeler gauge, measure the end gap.

Standard end gap:

No.1	**0.330 – 0.550 mm (0.0130 – 0.0217 in.)**
No.2	**0.450 – 0.670 mm (0.0177 – 0.0264 in.)**
Oil (Side rail)	**0.200 – 0.600 mm (0.0079 – 0.0236 in.)**

Maximum end gap:

No.1	**0.85 mm (0.0335 in.)**
No.2	**0.97 mm (0.0382 in.)**
Oil (Side rail)	**0.90 mm (0.0354 in.)**

If the end gap is greater than maximum, replace the piston ring. If the end gap is greater than maximum, even with a new piston ring, replace the cylinder block.

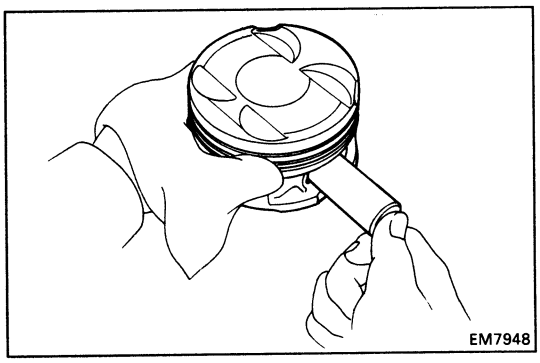
EM7948

D. Inspect piston pin fit

At 60°C (140°F), you should be able to push the piston pin into the piston pin hole with your thumb.

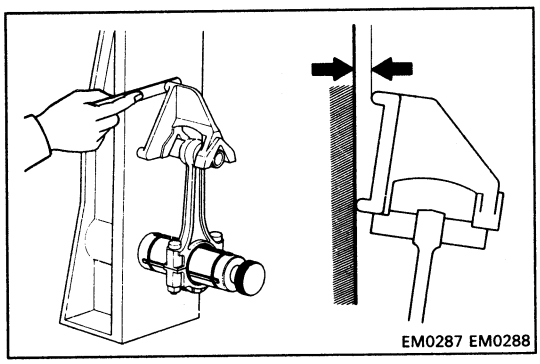
EM0287 EM0288

3. INSPECT CONNECTING ROD

A. Inspect connecting rod alignment

Using rod aligner and feeler gauge, check the connecting rod alignment.

- Check for bending.

Maximum bending:
0.05 mm (0.0020 in.) per 100 mm (3.94 in.)

If bend is greater than maximum, replace the connecting rod assembly.

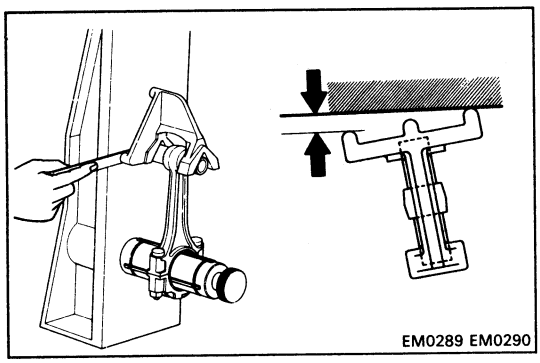
EM0289 EM0290

- Check for twist.

Maximum twist:
0.15 mm (0.0059 in.) per 100 mm (3.94 in.)

If twist is greater than maximum, replace the connecting rod assembly.

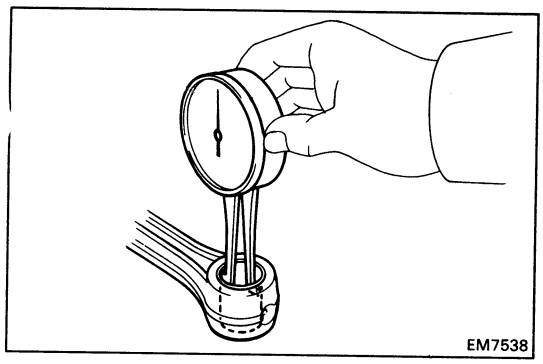

B. Inspect piston pin oil clearance

(a) Using a caliper gauge, measure the inside diameter of the connecting rod bushing.

Bushing inside diameter: 22.005 – 22.017 mm (0.8663 – 0.8668 in.)

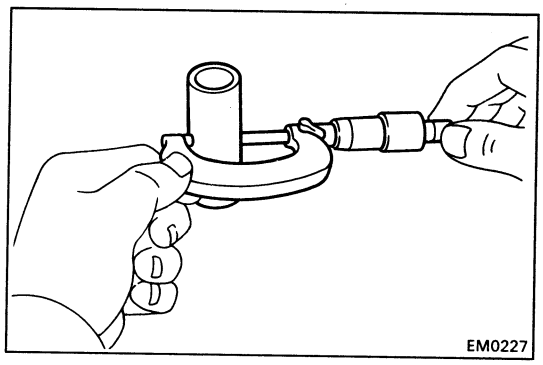

(b) Using a micrometer, measure the piston pin diameter.

Piston pin diameter: 21.997 – 22.009 mm (0.8660 – 0.8665 in.)

(c) Subtract the piston pin diameter measurement from the bushing inside diameter measurement.

Standard oil clearance: 0.005 – 0.011 mm (0.0002 – 0.0004 in.)

Maximum oil clearance: 0.05 mm (0.0020 in.)

If the oil clearance is greater than maximum, replace the bushing. If necessary, replace the piston and piston pin as a set.

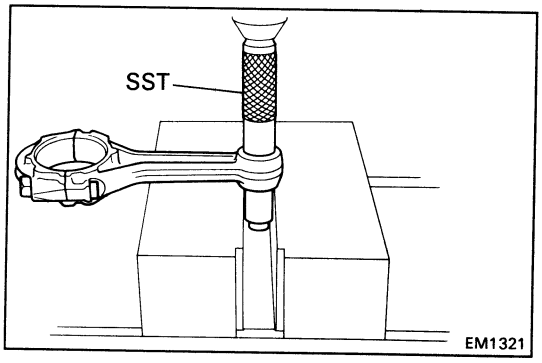

C. If necessary, replace connecting rod bushing

(a) Using SST and a press, press out the bushing.

SST 09222-30010

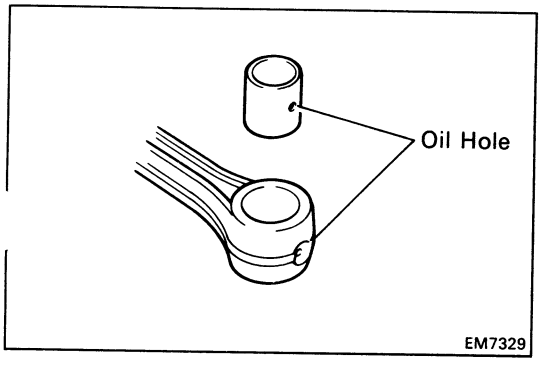

(b) Align the oil holes of a new bushing and the connecting rod.

(c) Using SST and a press, press in the bushing.

SST 09222-30010

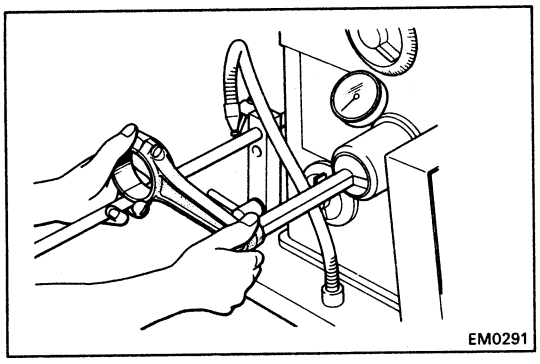

(d) Using a pin hole grinder, hone the bushing to obtain the standard specified clearance (see step B above) between the bushing and piston pin.

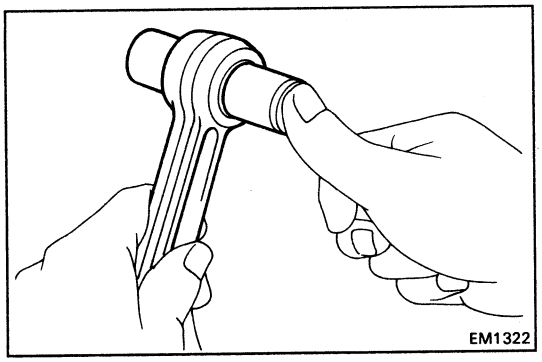

(e) Check the piston pin fit at normal room temperature.

Coat the piston pin with engine oil, and push it into the connecting rod with your thumb.

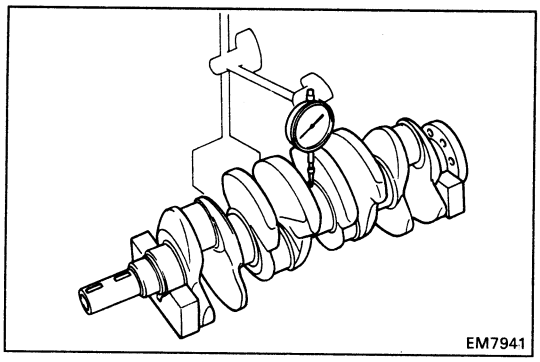

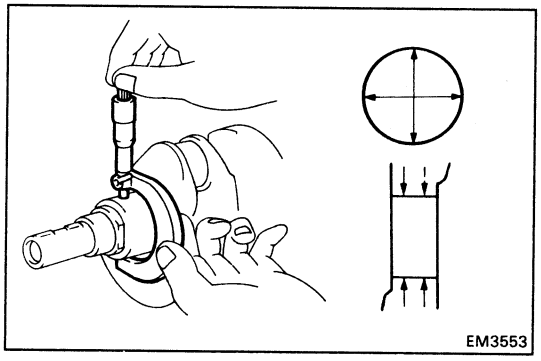

INSPECTION AND REPAIR OF CRANKSHAFT

1. INSPECT CRANKSHAFT FOR RUNOUT

(a) Place the crankshaft on V-blocks.

(b) Using a dial indicator, measure the circle runout at the center journal.

Maximum circle runout: 0.06 mm (0.0024 in.)

If the circle runout is greater than maximum, replace the crankshaft.

2. INSPECT MAIN JOURNALS AND CRANK PINS

(a) Using a micrometer, measure the diameter of each main journal and crank pin.

Main journal diameter:

STD size	**54.988 – 55.003 mm (2.1653 – 2.1655 in.)**
U/S 0.25	**54.745 – 54.755 mm (2.1553 – 2.1557 in.)**

Crank pin diameter:

STD size	**47.985 – 48.000 mm (1.8892 – 1.8898 in.)**
U/S 0.25	**47.745 – 47.755 mm (1.8797 – 1.8801 in.)**

If the diameter is not as specified, check the oil clearance (See pages EM-145 to 149). If necessary, grind or replace the crankshaft.

(b) Check each main journal and crank pin for taper and out-of-round as shown.

Maximum taper and out-of-round: 0.02 mm (0.0008 in.)

If the taper and out-of-round is greater than maximum, replace the crankshaft.

3. IF NECESSARY, GRIND AND HONE MAIN JOURNALS AND/OR CRANK PINS

Grind and hone the main journals and/or crank pins to the finished undersized diameter (See procedure step 2).

Install new main journal and/or crank pin undersized bearings.

REPLACEMENT OF CRANKSHAFT OIL SEALS

HINT: There are two methods (A and B) to replace the oil seal which are as follows:

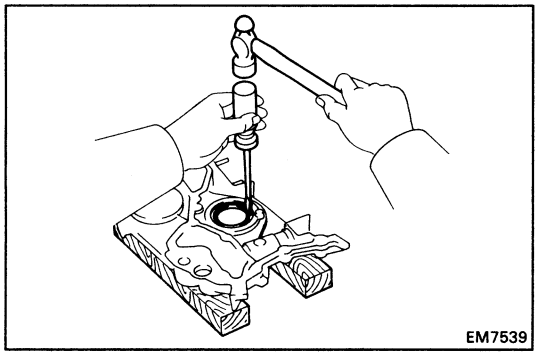

1. REPLACE CRANKSHAFT FRONT OIL SEAL

A. If oil pump is removed from cylinder block:

(a) Using a screwdriver and hammer, tap out the oil seal.

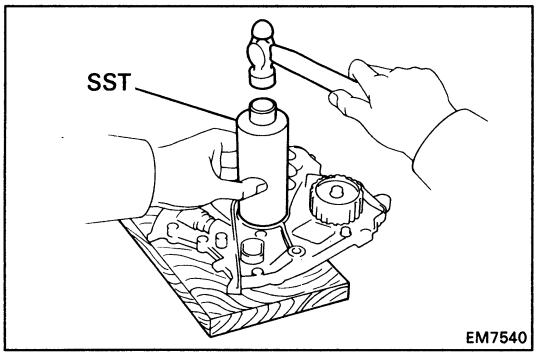

(b) Using SST and a hammer, tap in a new oil seal until its surface is flush with the oil pump case edge.

SST 09226-10010

(c) Apply MP grease to the oil seal lip.

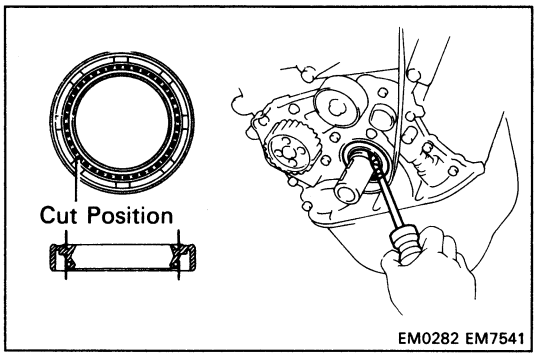

B. If oil pump is installed to the cylinder block:

(a) Using a knife, cut off the oil seal lip.

(b) Using a screwdriver, pry out the oil seal.

NOTICE: Be careful not to damage the crankshaft. Tape the screwdriver tip.

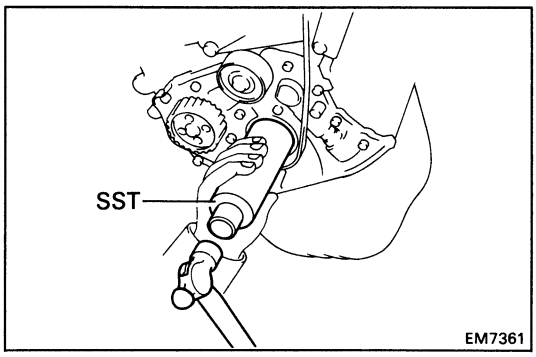

(c) Apply MP grease to a new oil seal lip.

(d) Using SST and a hammer, tap in the oil seal until its surface is flush with the oil pump case edge.

SST 09226-10010

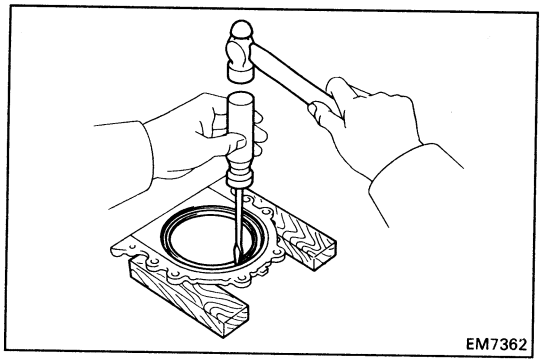
EM7362

2. REPLACE CRANKSHAFT REAR OIL SEAL

A. If rear oil seal retainer is removed from cylinder block:

(a) Using screwdriver and hammer, tap out the oil seal.

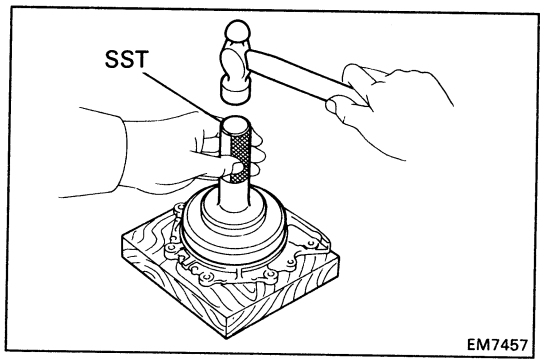

EM7457

(b) Using SST and a hammer, tap in a new oil seal until its surface is flush with the rear oil seal edge.

SST 09223-63010

(c) Apply MP grease to the oil seal lip.

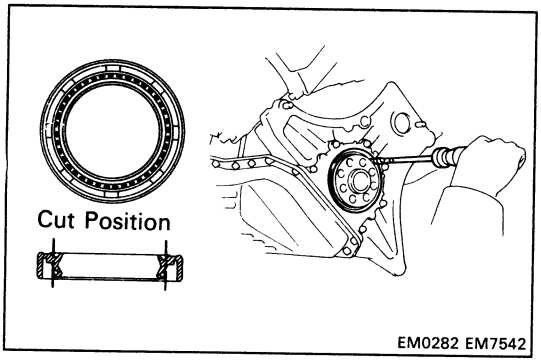

EM0282 EM7542

B. If rear oil seal retainer is installed to cylinder block:

(a) Using a knife, cut off the oil seal lip.

(b) Using a screwdriver, pry out the oil seal.

NOTICE: Be careful not to damage the crankshaft. Tape the screwdriver tip.

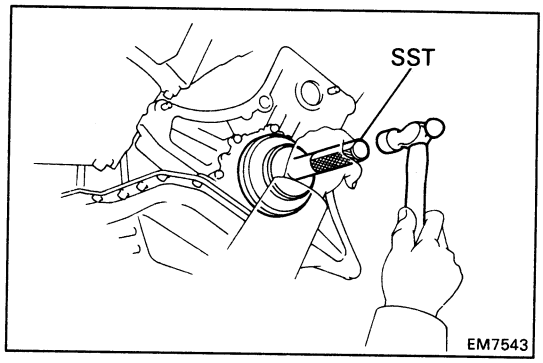

EM7543

(c) Apply MP grease to a new oil seal lip.

(d) Using SST and a hammer, tap in the oil seal until its surface is flush with the rear oil seal retainer edge.

SST 09223-63010

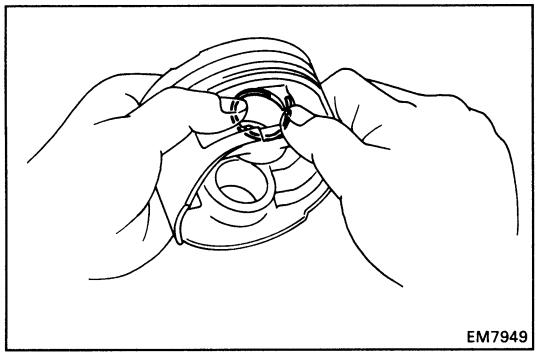
EM7949

ASSEMBLY OF PISTON AND CONNECTING ROD ASSEMBLIES

1. ASSEMBLE PISTON AND CONNECTING ROD

(a) Install a new snap ring on one side of the piston pin hole.

HINT: Be sure the end gap of the snap ring is not aligned with the pin hole cutout portion of the piston.

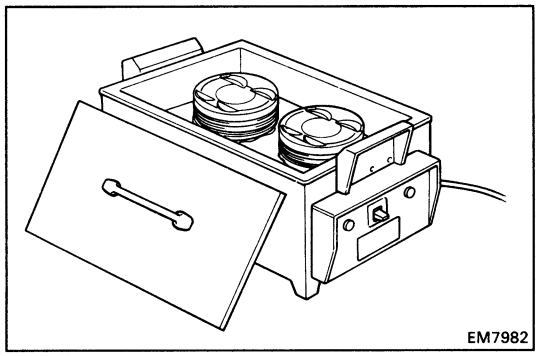
EM7982

(b) Gradually heat the piston to 80 – 90°C (176 – 194°F).

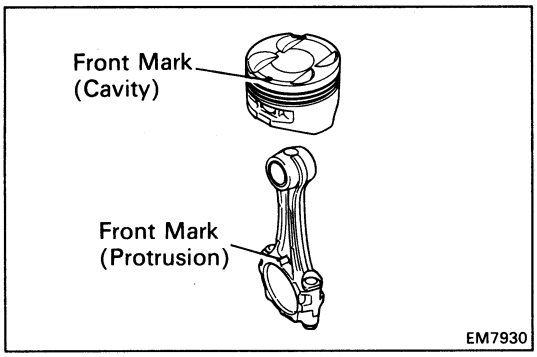

EM7930

(c) Coat the piston pin with engine oil.

(d) Align the front marks of the piston and connecting rod, and push in the piston pin with your thumb.

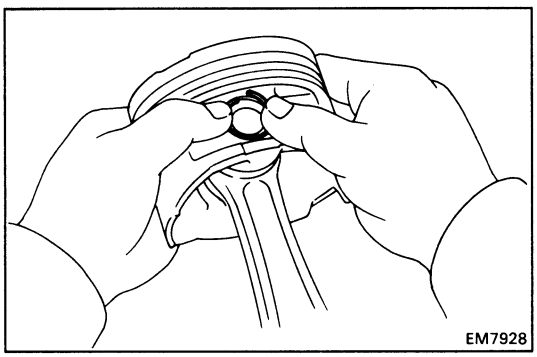
EM7928

(e) Install a new snap ring on the other side of the piston pin hole.

HINT: Be sure the end gap of the snap ring is not aligned with the pin hole cutout portion of the piston.

2. INSTALL PISTON RINGS

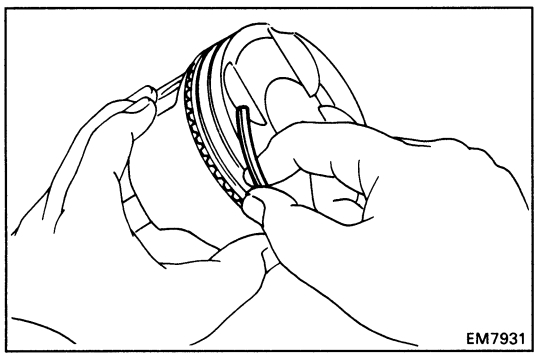
EM7931

(a) Install the oil ring expander and two side rails by hand.

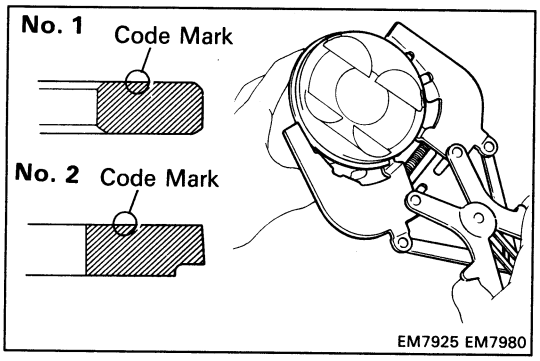

(b) Using a piston ring expander, install the two compression rings with the code mark facing upward.

Code mark: R

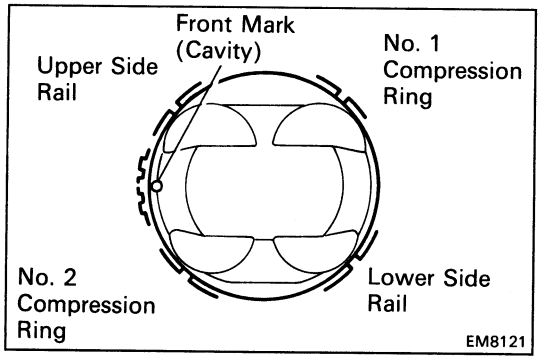

(c) Position the piston rings so that the ring ends are as shown.

NOTICE: Do not align the ring ends.

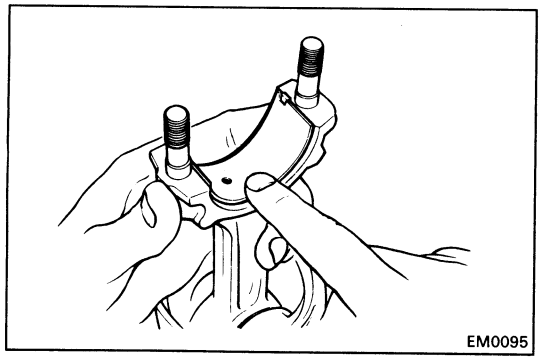

3. INSTALL BEARINGS

(a) Align the bearing claw with the groove of the connecting rod or connecting cap.

(b) Install the bearings in the connecting rod and connecting rod cap.

ASSEMBLY OF CYLINDER BLOCK

(See page EM-133)

HINT:

- Thoroughly clean all parts to be assembled.
- Before installing the parts, apply new engine oil to all sliding and rotating surfaces.
- Replace all gaskets, O-rings and oil seals with new parts.

1. INSTALL OIL NOZZLES (See page LU-14)

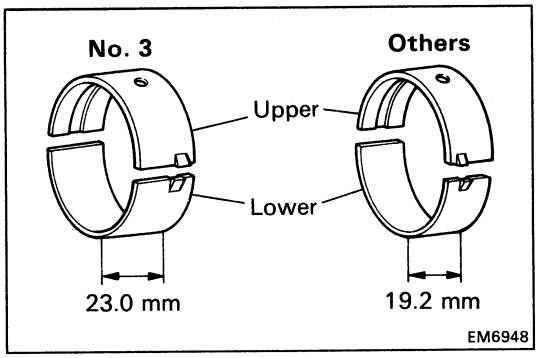

2. INSTALL MAIN BEARINGS

HINT:

- Main bearings come in widths of 19.2 mm (0.756 in.) and 23.0 mm (0.906 in.). Install the 23.0 mm (0.906 in.) bearings in the No.3 cylinder block journal position with the main bearing cap. Install the 19.2 mm (0.756 in.) bearings in the other positions.
- Upper bearings have an oil groove and oil holes; lower bearings do not.

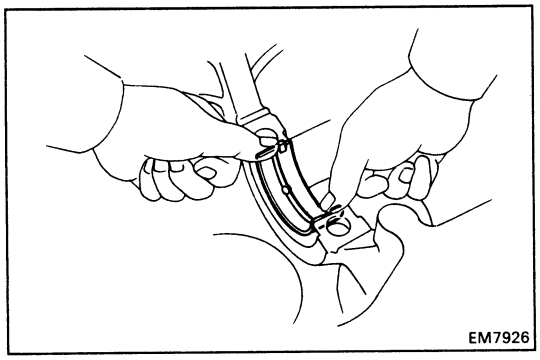

(a) Align the bearing claw with the claw groove of the cylinder block, and push in the five upper bearings.

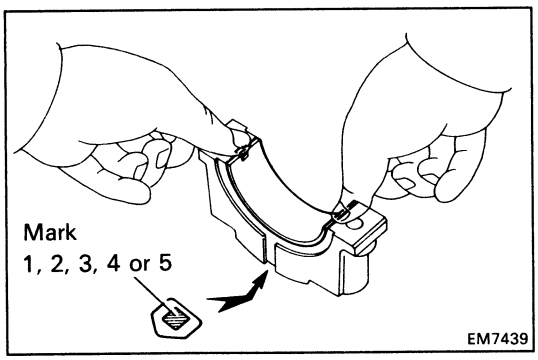

(b) Align the bearing claw with the claw groove of the main bearing cap, and push in the five lower bearings.

HINT: A number is marked on each main bearing cap to indicate the installation position.

3. INSTALL UPPER THRUST WASHERS

Install the two thrust washers under the No.3 journal position of the cylinder block with the oil grooves facing outward.

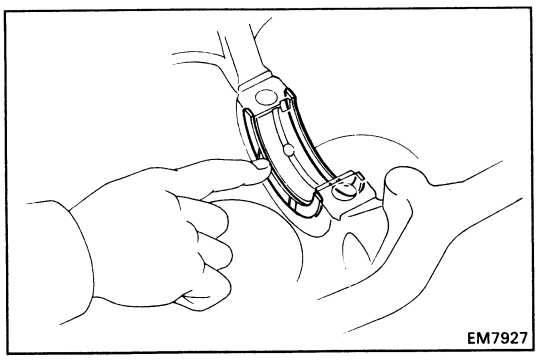

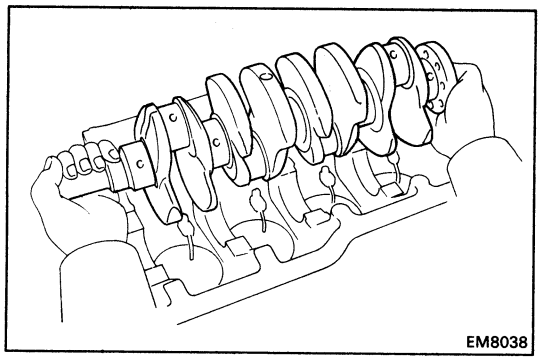

4. PLACE CRANKSHAFT ON CYLINDER BLOCK

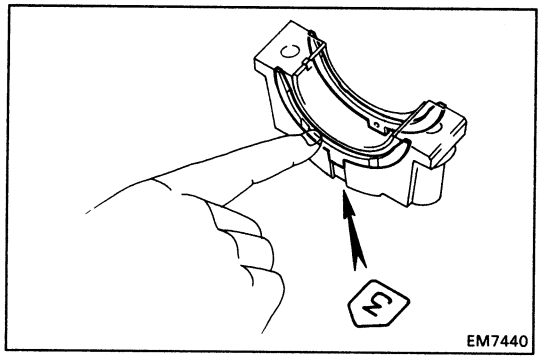

5. INSTALL MAIN BEARING CAPS AND LOWER THRUST WASHERS

(a) Install the two thrust washers on the No.3 bearing cap with the grooves facing outward.

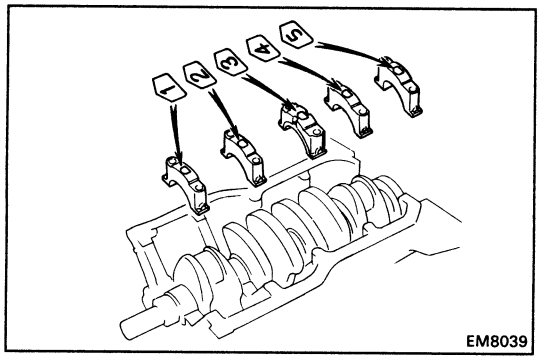

(b) Install the five main bearing caps in their proper locations.

HINT: Each bearing cap has a number and front mark.

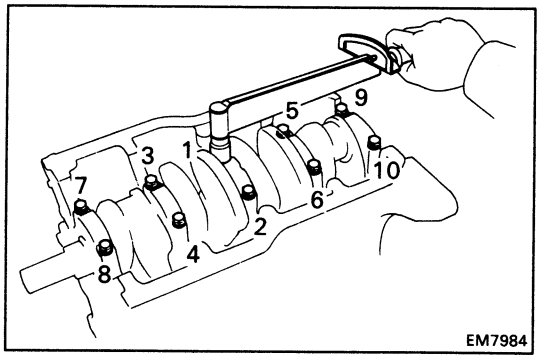

(c) Apply a light coat of engine oil on the threads and under the heads of the main bearing caps.

(d) Install and uniformly tighten the ten bolts of the main bearing caps in several passes in the sequence shown.

Torque: 600 kg-cm (43 ft-lb, 59 N·m)

(e) Check that the crankshaft turns smoothly.

(f) Check the crankshaft thrust clearance.
(See step 5 on page EM-147)

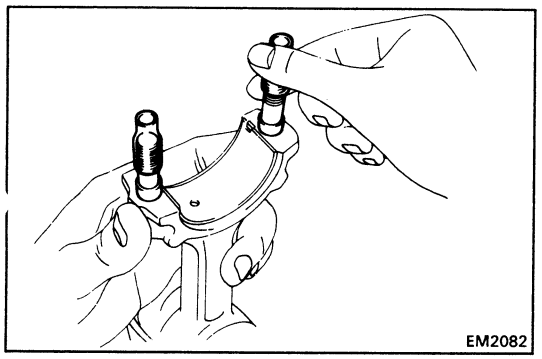

6. INSTALL PISTON AND CONNECTING ROD ASSEMBLIES

(a) Cover the connecting rod bolts with a short piece of hose to protect the crankshaft from damage.

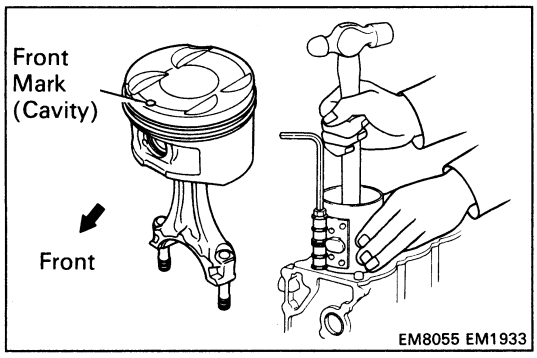

(b) Using a piston ring compressor, push the correctly numbered piston and connecting rod assemblies into each cylinder with the front mark of the piston facing forward.

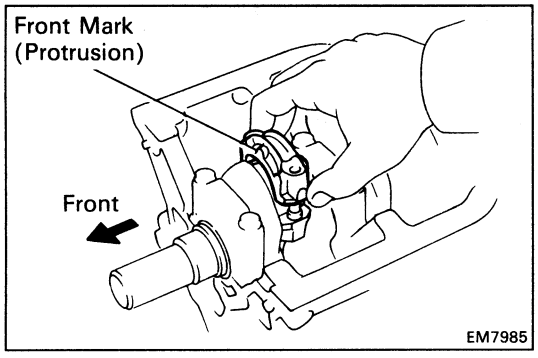

7. INSTALL CONNECTING ROD CAPS

(a) Match the numbered connecting rod cap with the connecting rod.

(b) Install the connecting rod cap with the front mark facing forward.

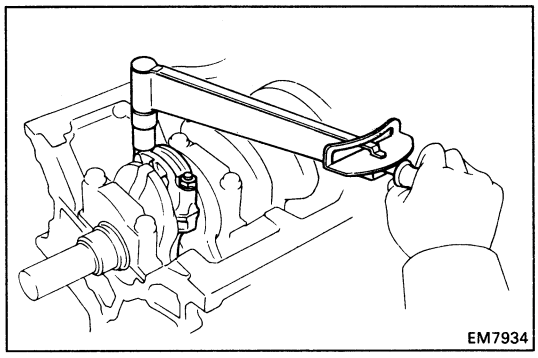

(c) Apply a light coat of engine oil on the threads and under the cap nuts.

(d) Using SST, install and alternately tighten the cap nuts in several passes.

Torque: 680 kg-cm (49 ft-lb, 67 N·m)

(e) Check that the crankshaft turns smoothly.

(f) Check the connecting rod thrust clearance. (See step 2 on page EM-145)

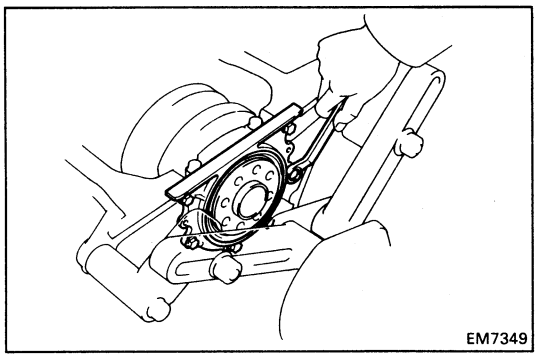

8. INSTALL REAR OIL SEAL RETAINER

Install a new gasket and the retainer with the six bolts.

Torque: 95 kg-cm (82 in.-lb, 9.3 N·m)

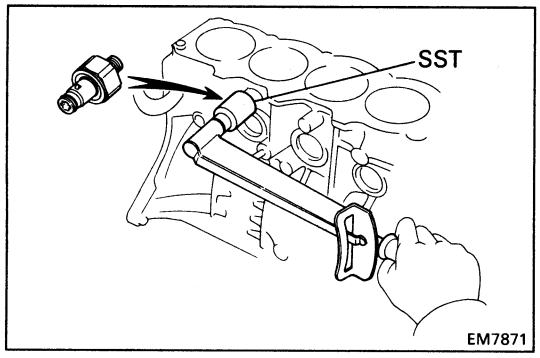

POST ASSEMBLY

1. **INSTALL KNOCK SENSOR**
   Using SST, install the knock sensor.
   SST 09816-30010
   Torque: 450 kg-cm (33 ft-lb, 44 N·m)

2. **INSTALL OIL COOLER (See pages LU-21 and 22)**
3. **INSTALL OIL FILTER (See page LU-7)**
4. **INSTALL OIL PUMP AND OIL PAN (See pages LU-15 and 16)**
5. **INSTALL WATER PUMP (See pages CO-12 and 13)**
6. **INSTALL CYLINDER HEAD (See pages EM-86 to 95)**
7. **INSTALL TURBOCHARGER (See pages TC-16 to 19)**
8. **INSTALL PULLEYS AND TIMING BELT (See pages EM-35 to 41)**

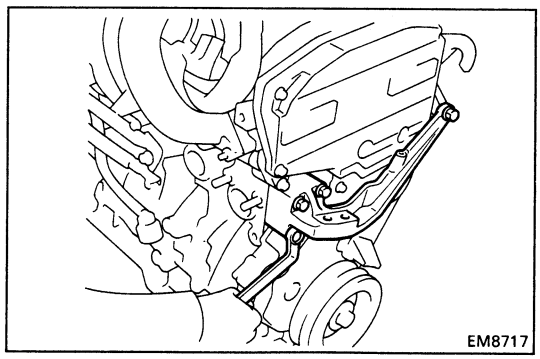

9. **INSTALL RH ENGINE MOUNTING BRACKET**
   Install the mounting bracket with the four bolts.
   Torque: 620 kg-cm (45 ft-lb, 61 N·m)

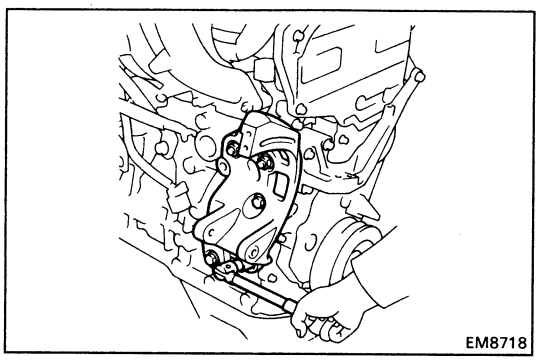

10. **INSTALL ALTERNATOR BRACKET**
    Install the alternator bracket with the three bolts and two nuts.
    Torque: 440 kg-cm (32 ft-lb, 43 N·m)
11. **INSTALL ALTERNATOR (See page CH-17)**
12. **REMOVE ENGINE STAND**

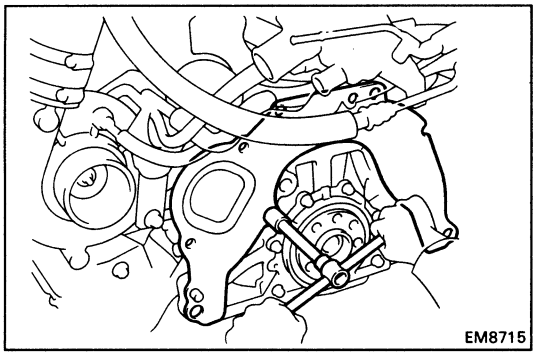

13. INSTALL REAR END PLATE

Torque: 95 kg-cm (82 ft-lb, 9.3 N·m)

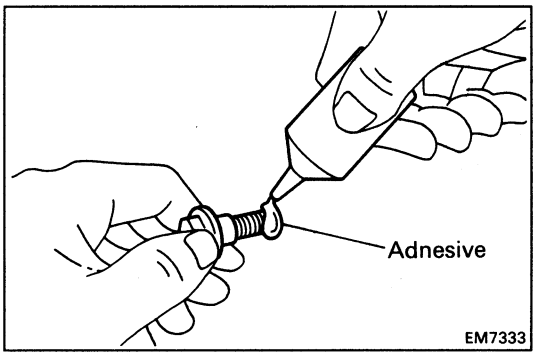

14. INSTALL FLYWHEEL

(a) Apply adhesive to two or three threads of the mount bolt end.

Adhesive: Part No. 08833-00070, THREE BOND 1324 or equivalent

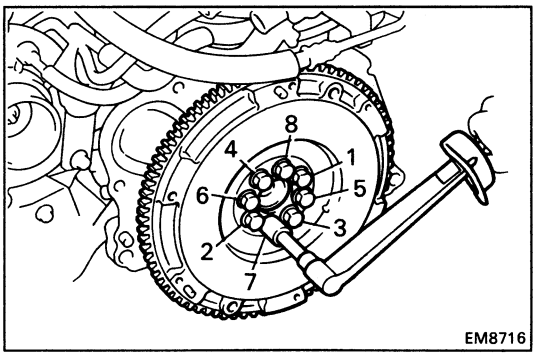

(b) Install the flywheel on the crankshaft.

(c) Install and uniformly tighten the mount bolts in several passes in the sequence shown.

Torque: 1,100 kg-cm (80 ft-lb, 108 N·m)

15. INSTALL CLUTCH DISC AND COVER

INSTALLATION OF ENGINE

1. **ASSEMBLE ENGINE AND TRANSAXLE**
   (See pages MT-5 and 6)

2. **INSTALL STARTER (See page ST-17)**

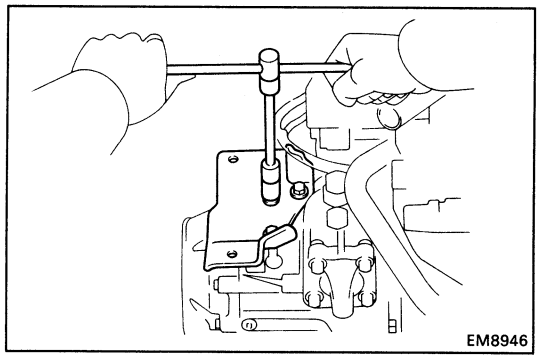

3. **INSTALL LH ENGINE MOUNTING BRACKET**

   Install the LH mounting bracket to the transaxle case with the three bolts.

   Torque: 530 kg-cm (38 ft-lb, 52 N·m)

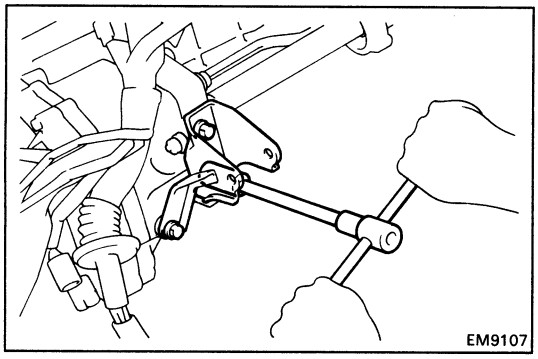

4. **INSTALL REAR ENGINE MOUNTING BRACKET**

   Install the mounting bracket with the six bolts.

   Torque:

   14 mm head bolt 530 kg-cm (38 ft-lb, 52 N·m)
   17 mm head bolt 790 kg-cm (57 ft-lb, 77 N·m)

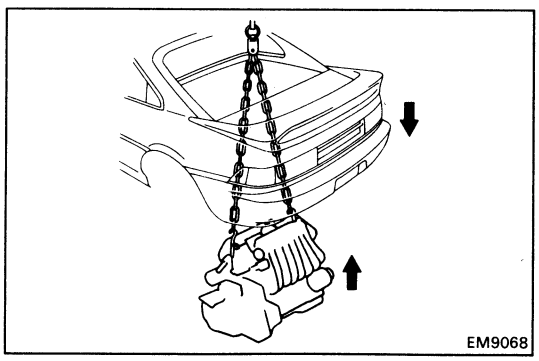

5. **INSTALL ENGINE AND TRANSAXLE ASSEMBLY IN VEHICLE**

   (a) Attach the engine chain hoist to the engine hangers.

   (b) Slowly lower the vehicle, and raise the engine.

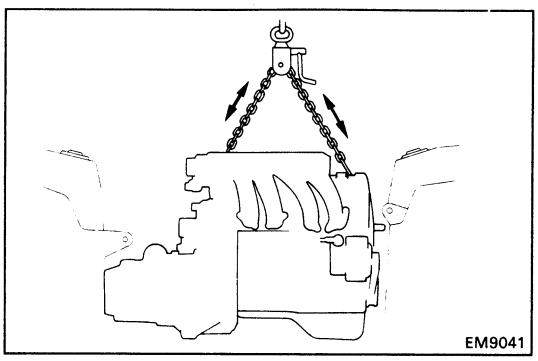

   (c) Keep the engine level, and align RH and LH mountings with the body mountings.

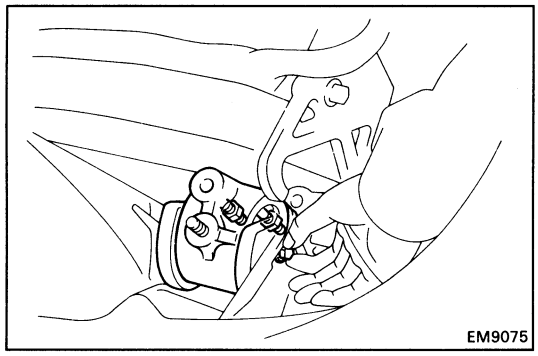

(d) Attach the RH mounting insulator to the body, and temporarily install the through bolt.

(e) Attach the RH mounting insulator to the mounting bracket, and temporarily install the two nuts.

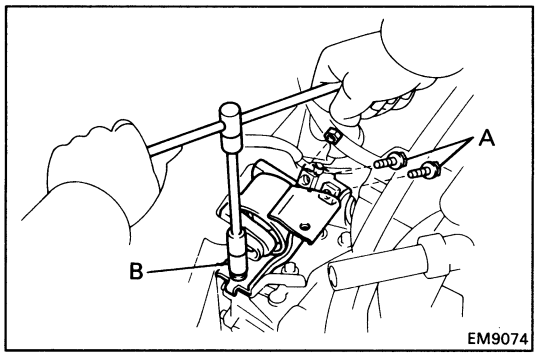

(f) Attach the LH mounting insulator to the body, and temporarily install the through bolt.

(g) Attach the LH mounting insulator to the mounting bracket, and install the three bolts.

Torque:
A 650 kg-cm (47 ft-lb, 63 N·m)
B 740 kg-cm (54 ft-lb, 73 N·m)

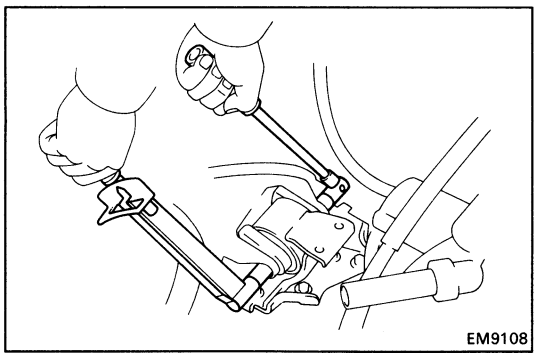

(h) Tighten the through bolt holding the LH mounting insulator to the body.

Torque: 800 kg-cm (58 ft-lb, 78 N·m)

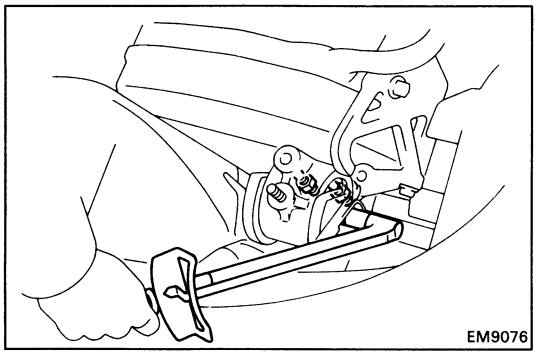

(i) Tighten the two nuts holding the RH mounting insulator to the mounting bracket.

Torque: 530 kg-cm (38 ft-lb, 52 N·m)

(j) Tighten the through bolt holding the RH mounting insulator to the body.

Torque: 800 kg-cm (58 ft-lb, 78 N·m)

(k) Remove the engine chain hoist from the engine.

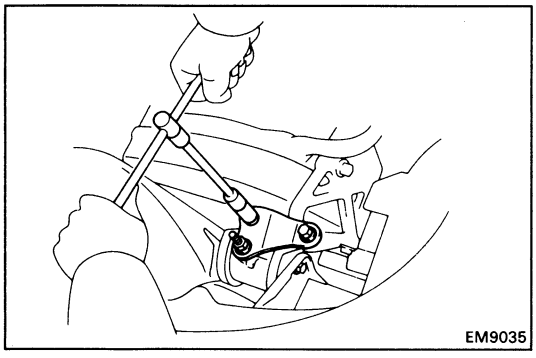

6. INSTALL RH ENGINE MOUNTING STAY

Install the mounting stay with the two bolts and nut.

Torque: 740 kg-cm (54 ft-lb, 73 N·m)

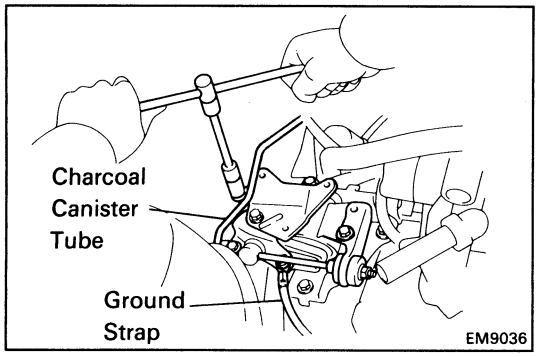

7. INSTALL LATERAL CONTROL ROD AND AIR CLEANER CASE BRACKET

Install the control rod, case bracket and charcoal canister tube with the five bolts, and connect the ground strap (from transaxle). Do not the tighten the bolt (A).

Torque: 360 kg-cm (26 ft-lb, 35 N·m)

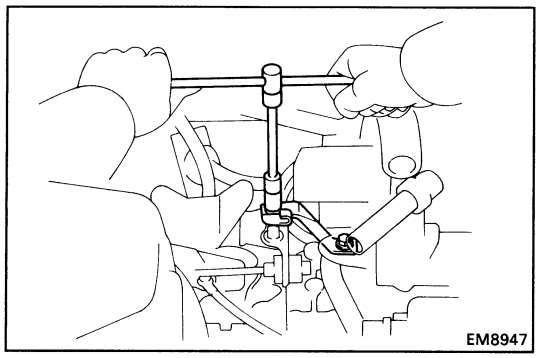

8. INSTALL LH ENGINE MOUNTING STAY

(a) Install the mounting stay and speedometer cable clamp with the two bolts.

Torque:
Transaxle side 250 kg-cm (18 ft-lb, 25 N·m)
Mounting insulator side 740 kg-cm (54 ft-lb, 73 N·m)

(b) Tighten the bolt (A) of step 6.

Torque: 380 kg-cm (27 ft-lb, 37 N·m)

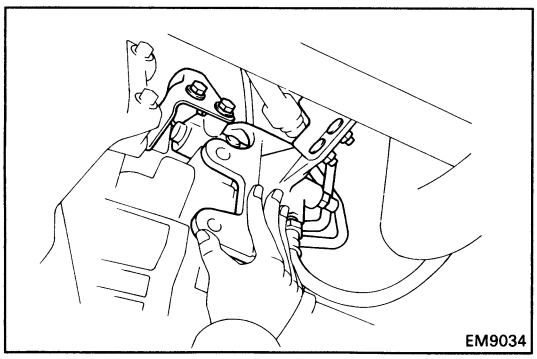

9. INSTALL CLUTCH RELEASE CYLINDER AND FRONT ENGINE MOUNTING BRACKET

(a) Place the release cylinder on the transaxle.

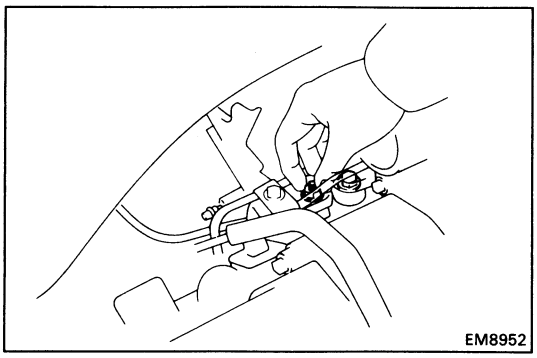

(b) Temporarily install the bolt and nut holding the release cylinder to the transaxle.

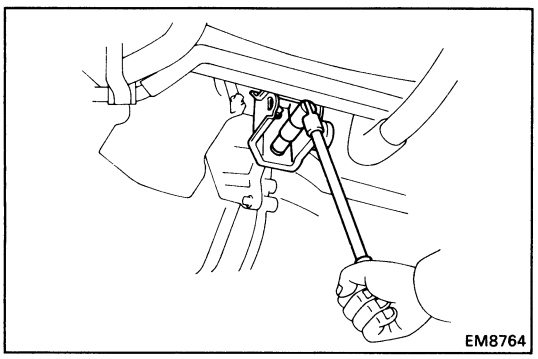

(c) Install the mounting bracket with the two bolts.

Torque: 790 kg-cm (57 ft-lb, 77 N·m)

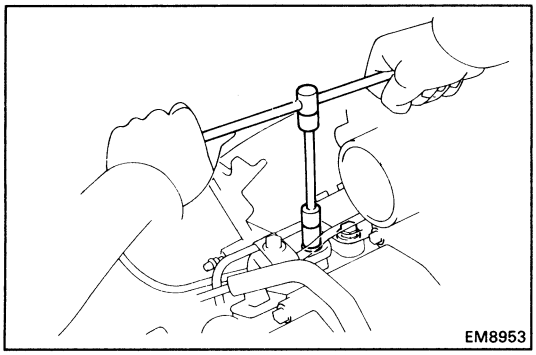

(d) Tighten the bolt and nut holding the clutch release cylinder to the tranaxle.

Torque: 120 kg-cm (9 ft-lb, 12 N·m)

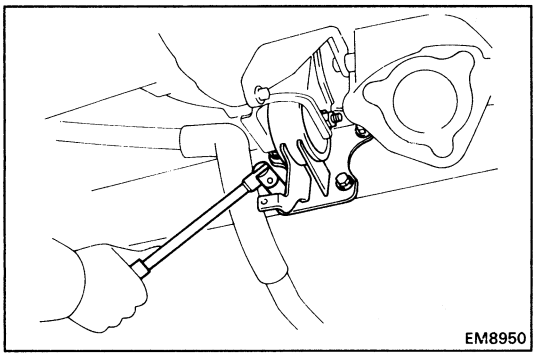

10. INSTALL FRONT ENGINE MOUNTING INSULATOR

(a) Install the mounting insulator to the body with the four bolts.

Torque: 740 kg-cm (54 ft-lb, 73 N·m)

(b) Temporarily install the through bolt and nut holding the mounting insulator to the mpunting bracket.

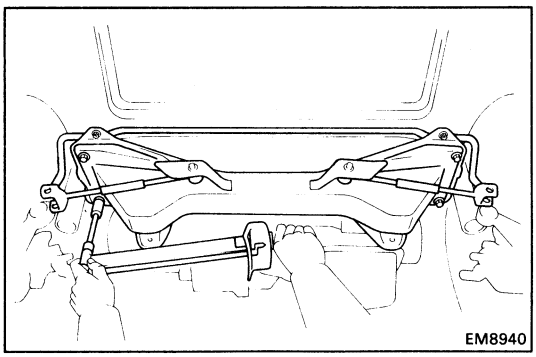

11. INSTALL REAR SUSPENSION LOWER CROSSMEMBER

(a) Install the lower crossmember with the four bolts.

Torque: 1,150 kg-cm (83 ft-lb, 113 N·m)

(b) Install the drive shafts. (See pages SA-66 to 68)

(c) Install the lower suspension arm. (See page SA-77)

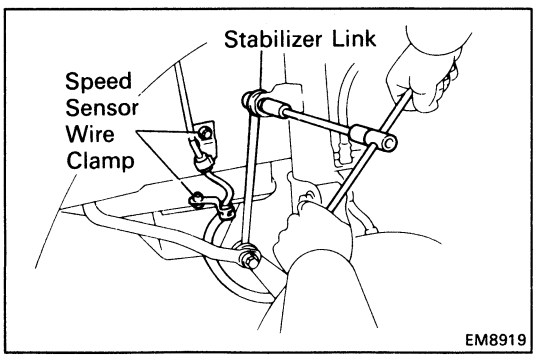

(d) Install the stabilizer link to the shock absorber with the nut. Connect the two stabilizer links

Torque: 500 kg-cm (36 ft-lb, 49 N·m)

(e) Install the wire clamp of the speed sensor with the bolt. Install the two wire clamp.

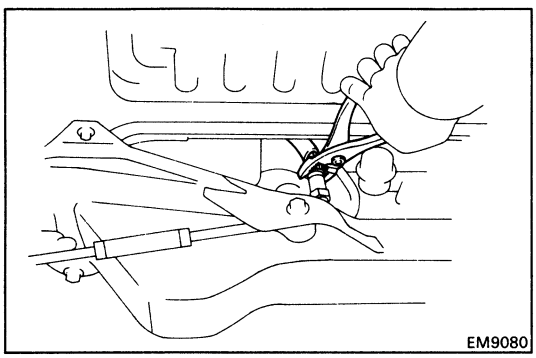

12. CONNECT SPEEDOMETER CABLE

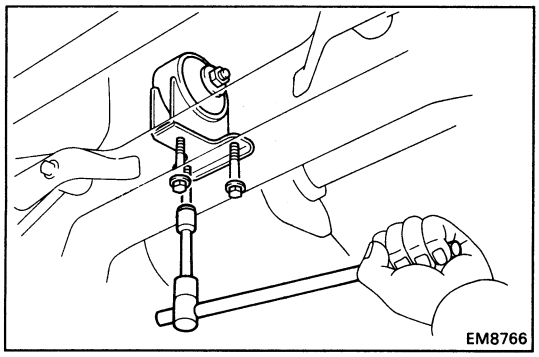

13. INSTALL REAR ENGINE MOUNTING INSULATOR

(a) Temporarily install the mounting bracket to the body with the three bolts.

(b) Temporarily install the through bolt holding the mounting insulator to the mounting bracket.

(c) Install the mounting bracket to the body with the three bolts.

Torque: 650 kg-cm (47 ft-lb, 64 N·m)

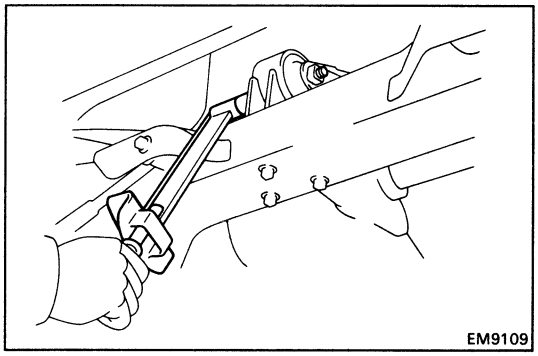

(d) Tighten the through bolt holding the mounting insulator to the mounting bracket.

Torque: 800 kg-cm (58 ft-lb, 79 N·m)

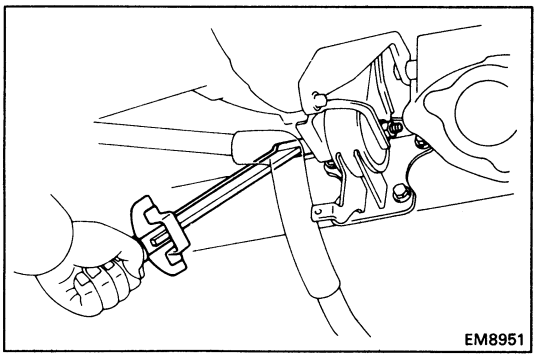

14. TIGHTEN FRONT ENGINE MOUNTING THROUGH BOLT

Torque: 980 kg-cm (71 ft-lb, 96 N·m)

15. INSTALL INTERCOOLER
(See steps 2, 3 (g) and 4 to 7 on page TC-23 and 24)

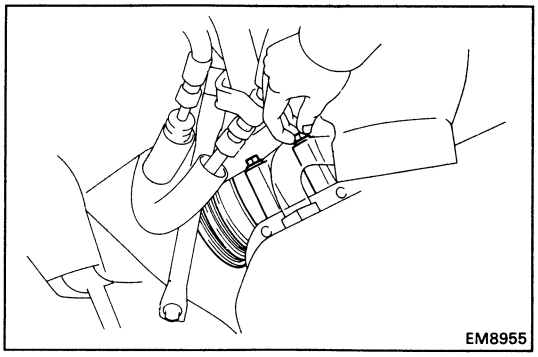

16. INSTALL A/C COMPRESSOR AND IDLER PULLEY BRACKET

(a) Temporarily install the compressor with the two bolts.

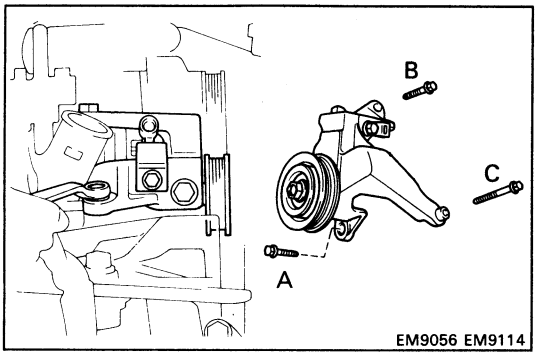

(b) Install the idler pulley bracket with the three bolts.

Torque:
A 275 kg-cm (20 ft-lb, 27 N·m)
B 375 kg-cm (27 ft-lb, 37 N·m)
C 250 kg-cm (18 ft-lb, 25 N·m)

(c) Install the wire clamp of the A/C compressor with the bolt.

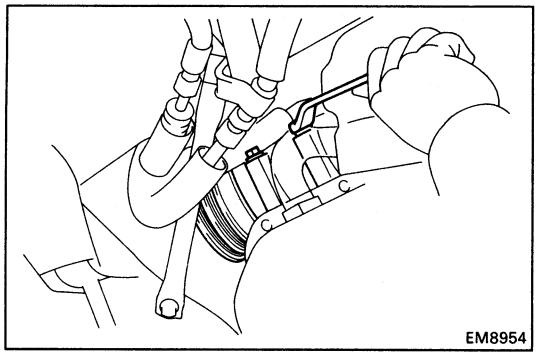

(d) Tighten the two bolts of the lower side holding the A/C compressor to the cylinder block.

Torque: 280 kg-cm (20 ft-lb, 27 N·m)

(e) Connect the A/C compressor connector.

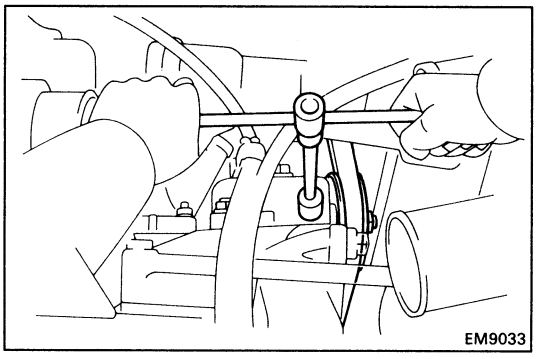

(f) Install and adjust the drive belt with the idler pulley bolt and adjusting bolt.

17. INSTALL ENGINE COMPARTMENT COOLING FAN
(See steps 1 and 2 on page CO-36)

18. INSTALL FRONT EXHAUST PIPE

HINT: Passing the exhaust pipe rear side between the body and suspension crossmember is not easy, so follow the method shown in the illustration.

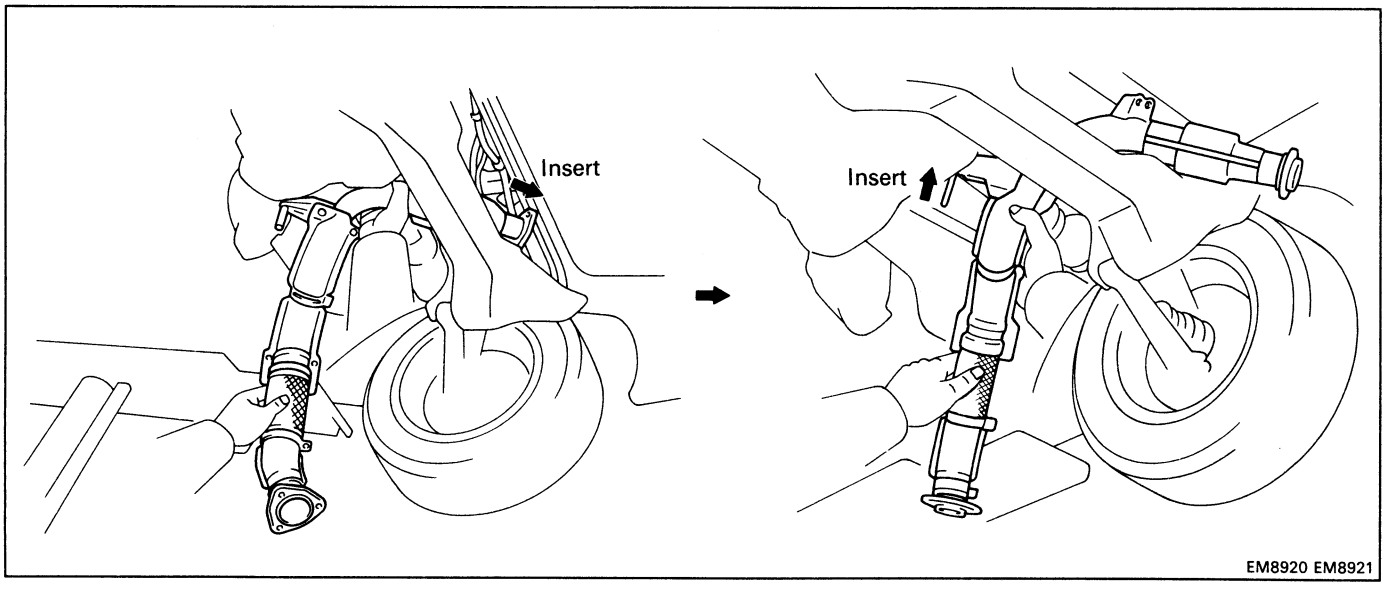

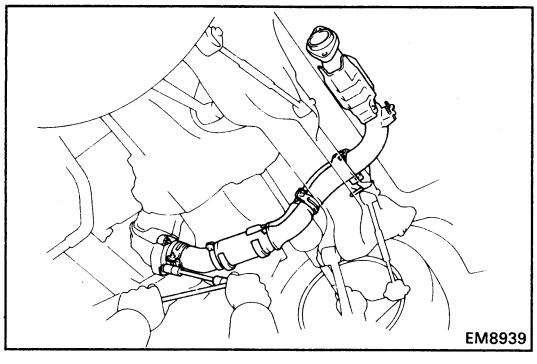

(a) Place a new gasket on the front of the front exhaust pipe.

(b) Using a 14 mm deep socket wrench, install the three new nuts holding the exhaust pipe to the catalytic converter.

Torque: 630 kg-cm (46 ft-lb, 62 N·m)

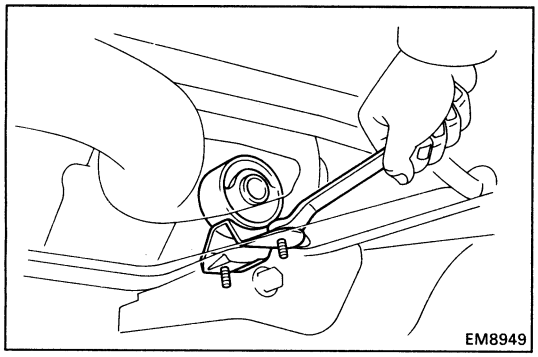

(c) Install the support bracket with the two bolts.

Torque: 210 kg-cm (15 ft-lb, 21 N·m)

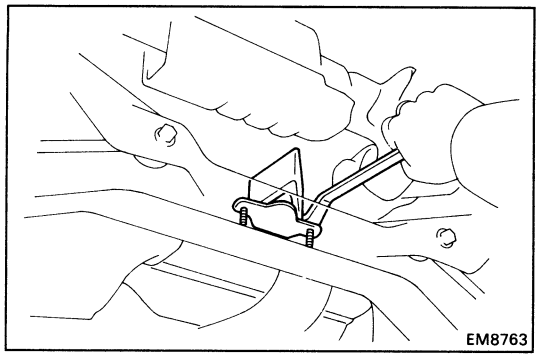

(d) Install the damper with the two bolts.

Torque: 210 kg-cm (15 ft-lb, 21 N·m)

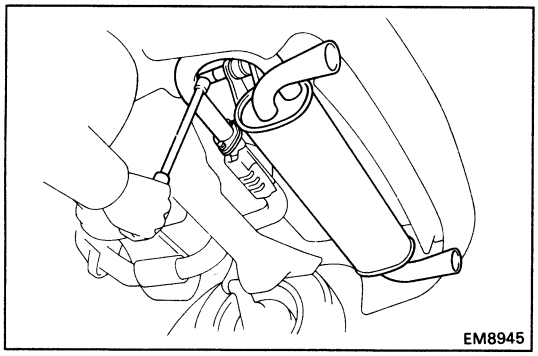

19. INSTALL TAILPIPE

(a) Install the tailpipe with the two through bolts.

Torque: 670 kg-cm (48 ft-lb, 66 N·m)

(b) Place a new gasket between the front exhaust pipe and tailpipe.

(c) Temporarily install the two bolts holding the front exhaust pipe to the tailpipe.

(d) Install the two bolts holding the stopper bracket of the front exhaust pipe to the tailpipe stopper bracket.

Torque: 190 kg-cm (14 ft-lb, 19 N·m)

(e) Tighten the two bolts holding the front exhaust pipe to the tailpipe.

Torque: 440 kg-cm (32 ft-lb, 43 N·m)

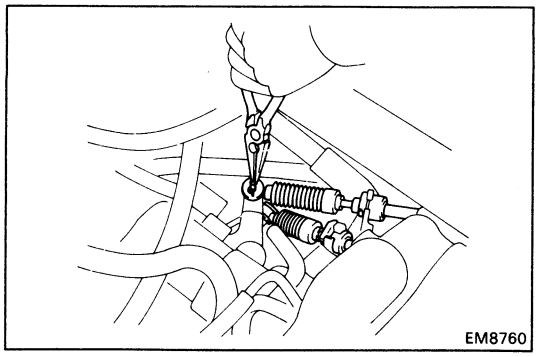

20. CONNECT TRANSAXLE CONTROL CABLES TO TRANSAXLE

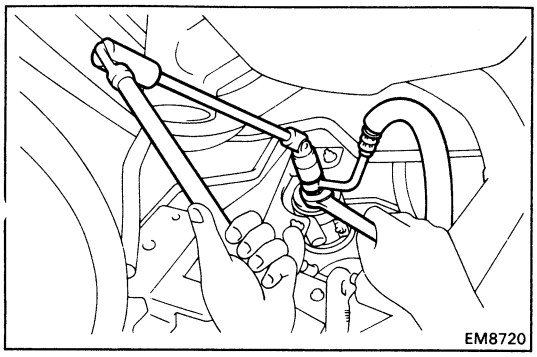

21. CONNECT FUEL INLET HOSE TO FUEL FILTER

Torque: 300 kg-cm (22 ft-lb, 29 N·m)

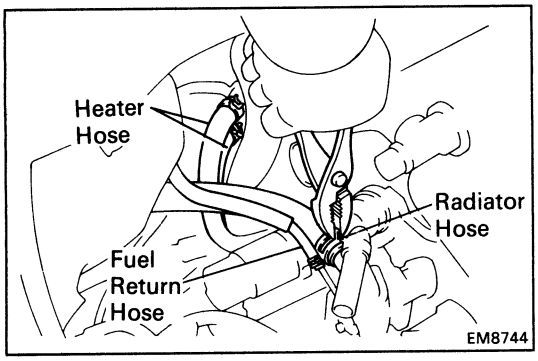

22. CONNECT FUEL RETURN HOSE

23. CONNECT RADIATOR HOSE TO WATER OUTLET

24. CONNECT HEATER HOSES

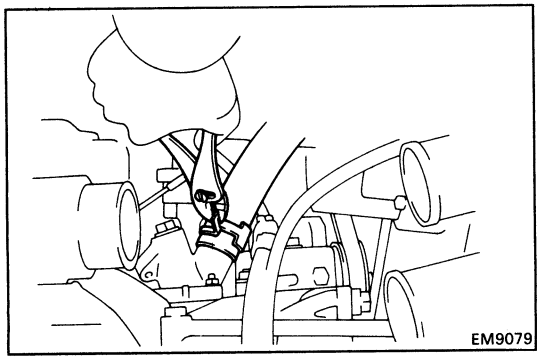

25. CONNECT RADIATOR HOSE TO WATER INLET

26. CONNECT STARTER CABLE

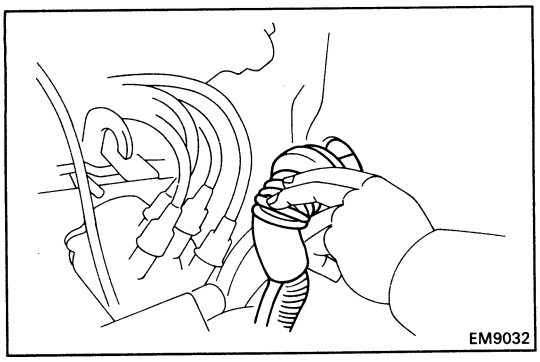

27. CONNECT ENGINE WIRE TO LUGGAGE COMPARTMENT

(a) Push in the engine wire through the luggage compartment.

(b) Connect the following connectors:

(1) Two engine ECU connectors

(2) Starter relay connector

(3) Engine comparment cooling fan relay connector

(4) Engine compartment wire connector

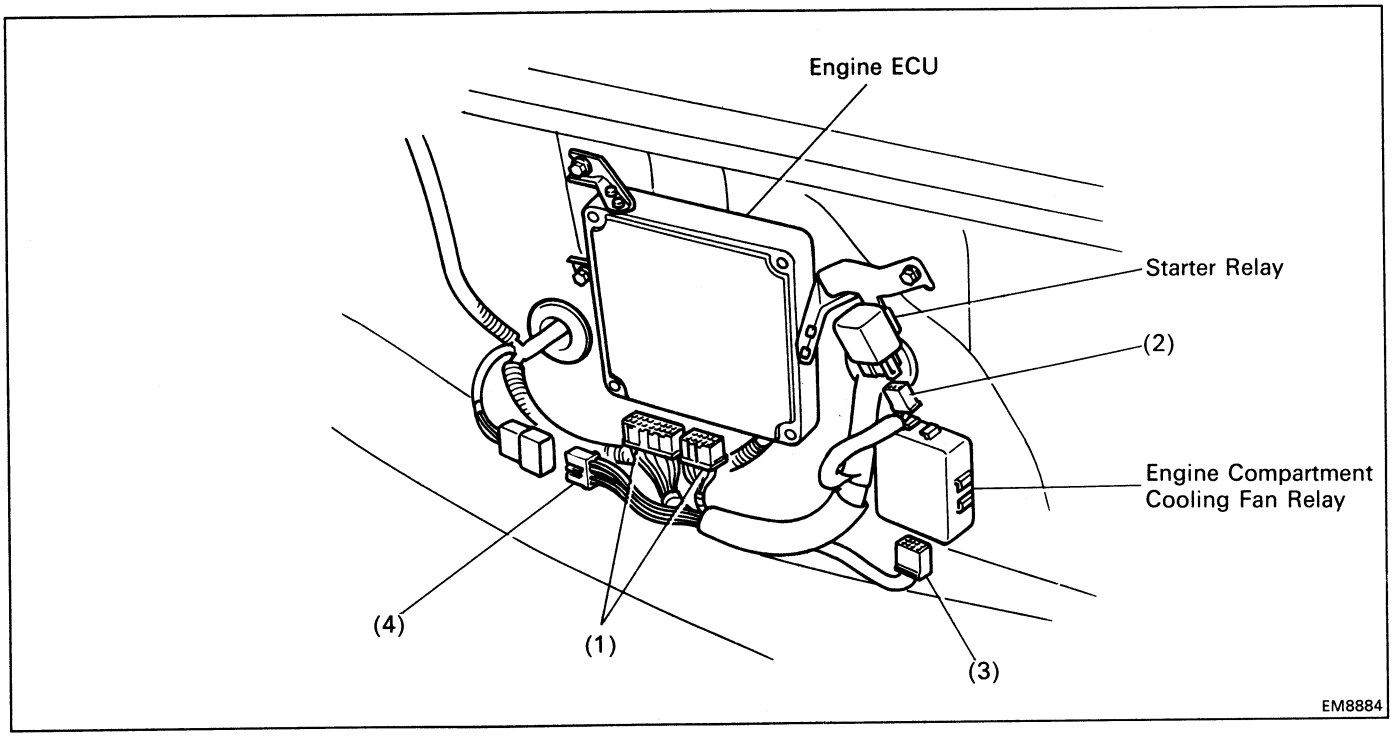

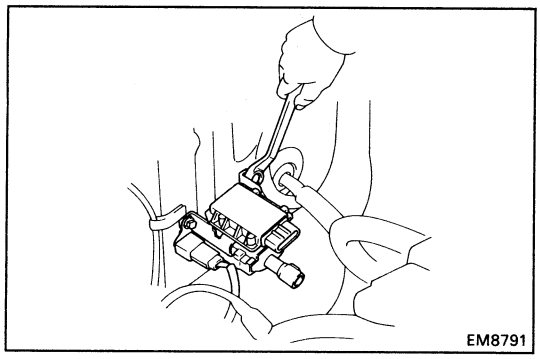

28. INSTALL IGNITION COIL AND IGNITER

(a) Install the ignition coil and igniter assembly with the two bolts. Connect the noise filter.

(b) Connect the high-tension cord.

(c) Connect the ignition coil connector.

(d) Connect the igniter connector.

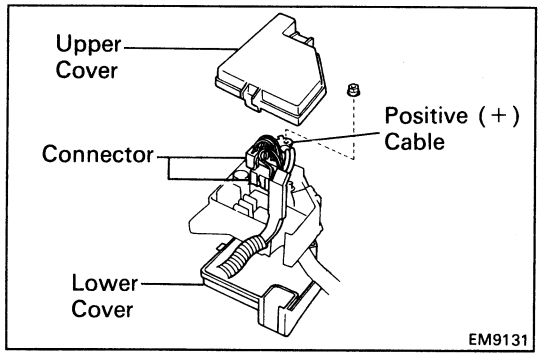

29. CONNECT ENGINE WIRE, AND INSTALL ENGINE RELAY BOX

(a) Connect the two connectors and positive (+) cable of the engine wire to the relay box.

(b) Install the upper and lower covers to the relay box.

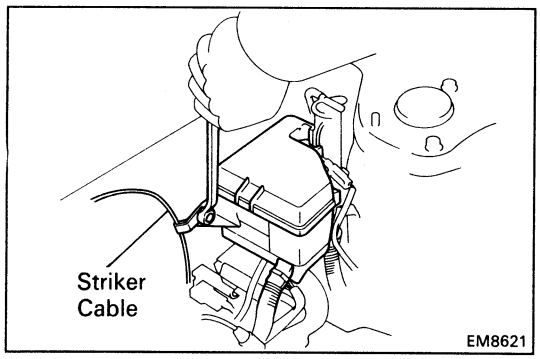

(c) Install the relay box with the two bolts. Install the luggage compartment striker cable.

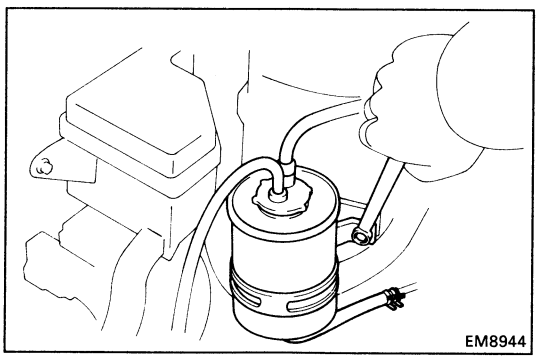

30. INSTALL CHARCOAL CANISTER

(a) Install the charcoal canister with the two bolts.

(b) Connect the three hoses.

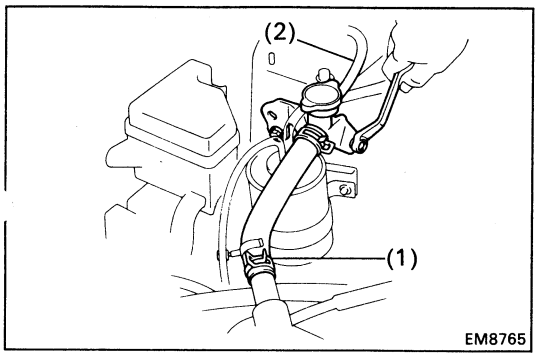

31. INSTALL WATER FILLER

(a) Install the water filler with the two bolts.

(b) Connect the following hoses:

(1) Water filler hose

(2) Coolant reservoir hose

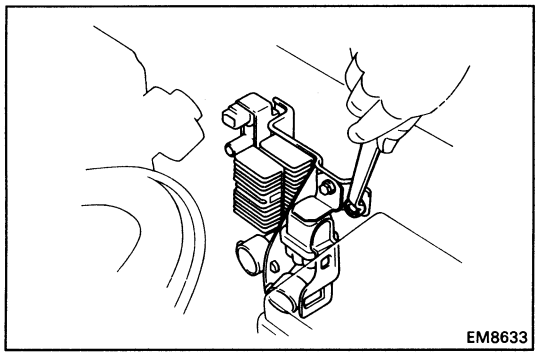

32. INSTALL INJECTOR SOLENOID RESISTOR, FUEL PUMP RELAY, FUEL PUMP RESISTOR AND A/C VSV

(a) Install the solenoid resistor, fuel pump relay, fuel pump resistor assembly and A/C VSV with the two bolts.

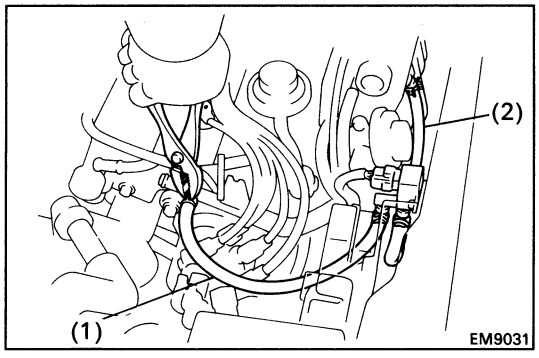

(b) Connect the following hoses:
(1) A/C VSV air hose from No.2 air tube
(2) A/C VSV vacuum hose from intake manifold

(c) Connect the following connectors:
- Solenoid resistor connector
- Fuel pump relay connector
- Fuel pump resistor connector
- A/C VSV connector

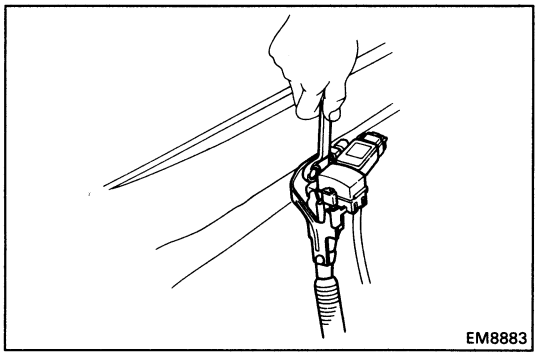

33. INSTALL CHECK CONNECTOR AND TURBOCHARGING PRESSURE SENSOR

Install the check connector and turbocharging pressure sensor with the bolt.

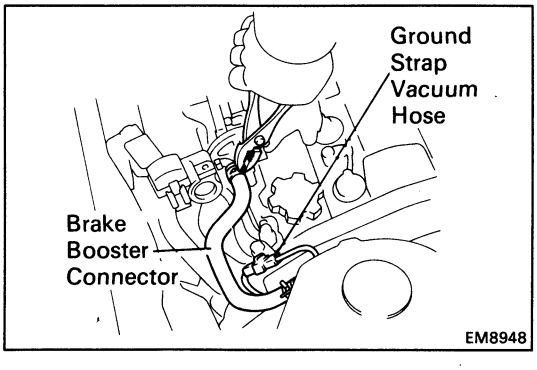

34. CONNECT BRAKE BOOSTER VACUUM HOSE

35. CONNECT GROUND STRAP CONNECTOR

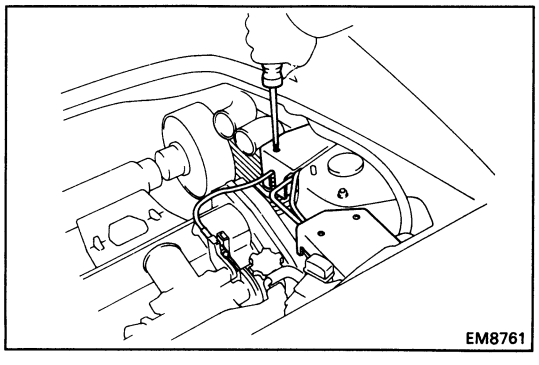

36. INSTALL CRUISE CONTROL ACTUATOR (w/ CRUISE CONTROL SYSTEM) AND ACCELERATOR LINKAGE

(a) Connect the cable to the accelerator linkage.
(b) Install the accelerator linkage with the three bolts.
(c) Connect the actuator connector.
(d) Install the actuator with the three bolts.
(e) Install the accelerator linkage cover with the screw.
(f) Install the actuator cover with the two screws.

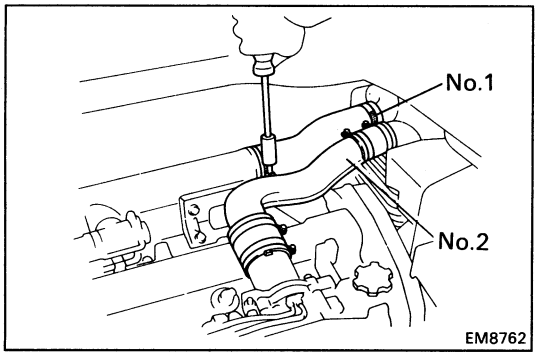

37. **INSTALL ACCELERATOR CABLE, AND ADJUST IT**

38. **INSTALL NO.1 AIR INTAKE CONNECTOR**

39. **INSTALL NO.2 AIR INTAKE CONNECTOR**

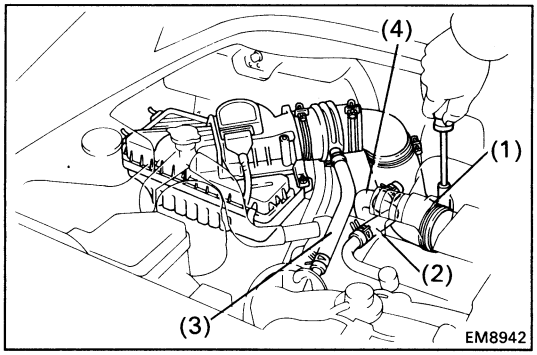

40. **INSTALL AIR CLEANER**
    (a) Install the air cleaner case with the three bolts.
    (b) Install the air cleaner element.
    (c) Connect the following hose:
        (1) Air cleaner hose from turbocharger
        (2) PCV hose from cylinder head cover
        (3) Air hose from No.2 air tube
        (4) Air hose from air by-pass valve
    (d) Install the air cleaner cap and air flow meter.
    (e) Connect the air flow meter connector.

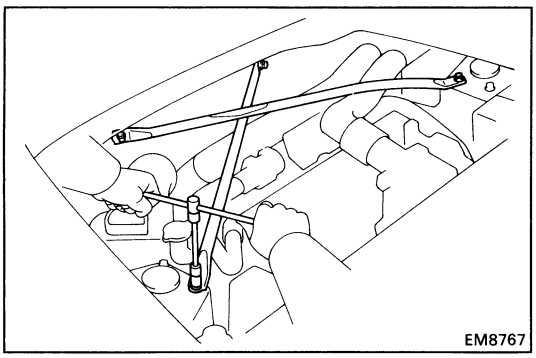

41. **INSTALL SUSPENSION UPPER BRACE**
    Install the suspension upper brace with the two bolts and two nuts.
    Torque: Bolt 740 kg-cm (54 ft-lb, 73 N·m)
    Nut 650 kg-cm (47 ft-lb, 64 N·m)

42. **CONNECT CABLE TO NEGATIVE TERMINAL OF BATTERY**

43. **FILL WITH ENGINE COOLANT (See page CO-7)**
    Capacity (w/ Heater):
    13.6 liters (14.4 US qts, 12.0 Imp. qts)

44. **FILL WITH ENGINE OIL (See page LU-8)**
    Capacity:
    Drain and refill
    w/ Oil filter change
    3.9 liters (4.1 US qts, 3.4 Imp. qts)
    w/o Oil filter change
    3.6 liters (3.8 US qts, 3.2 Imp. qts)
    Dry fill 4.3 liters (4.5 US qts, 3.8 Imp. qts)

45. **START ENGINE AND CHECK FOR LEAKS**

46. PERFORM ENGINE ADJUSTMENT

(a) Adjust the alternator drive belt.
(See page CH-3)

Drive belt tension: New belt 120 ± 20 lb
Used belt 104 ± 20 lb

(b) Adjust the A/C drive belt.

Drive belt tension: New belt 160 ± 20 lb
Used belt 100 ± 20 lb

(c) Adjust the ignition timing.
(See steps 9 to 13 on pages IG-17 and 18)

Ignition timing:
10° BTDC @ idle
(w/ Terminals TE1 and E1 connected)

47. INSTALL ENGINE UNDER COVERS

48. INSTALL ENGINE HOOD

49. INSTALL ENGINE COMPARTMENT SIDE PANELS

50. PERFORM ROAD TEST

Check for abnormal noise, shock, slippage, correct shift points and smooth operation.

51. RECHECK ENGINE COOLANT AND OIL LEVELS

CYLINDER BLOCK (5S-FE)

COMPONENTS

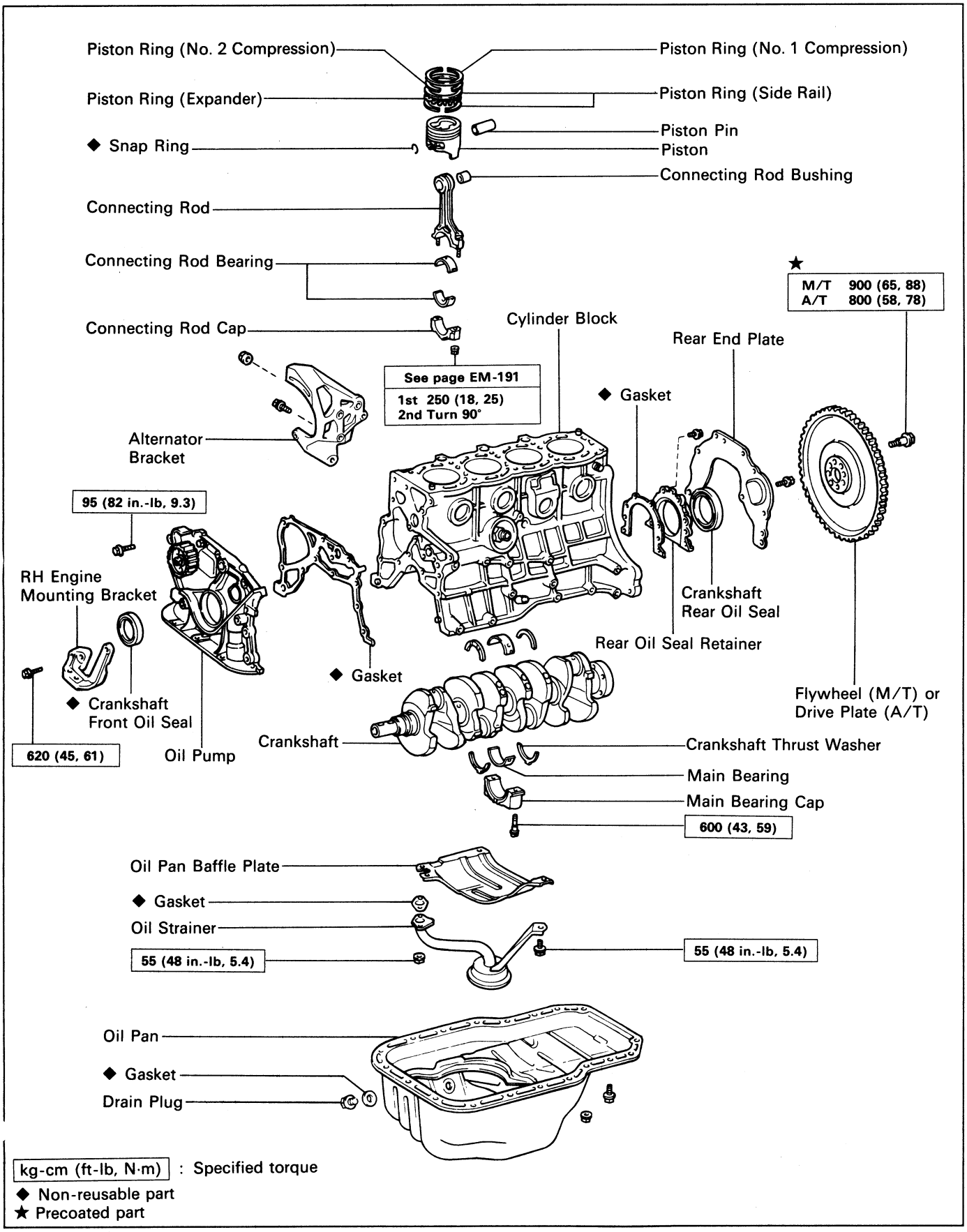

kg-cm (ft-lb, N·m) : Specified torque

◆ Non-reusable part

★ Precoated part

REMOVAL OF ENGINE

1. **DISCONNECT CABLE FROM NEGATIVE TERMINAL OF BATTERY**

   CAUTION: Work must be started after approx. 20 seconds or longer from the time the ignition switch is turned to the "LOCK" position and the negative (–) terminal cable is disconnected from the battery.

2. **REMOVE ENGINE HOOD**

3. **REMOVE ENGINE HOOD SIDE PANELS**

4. **REMOVE ENGINE UNDER COVERS**

5. **DRAIN ENGINE COOLANT (See page CO-6)**

6. **DRAIN ENGINE OIL (See page LU-7)**

7. **DRAIN TRANSAXLE OIL**

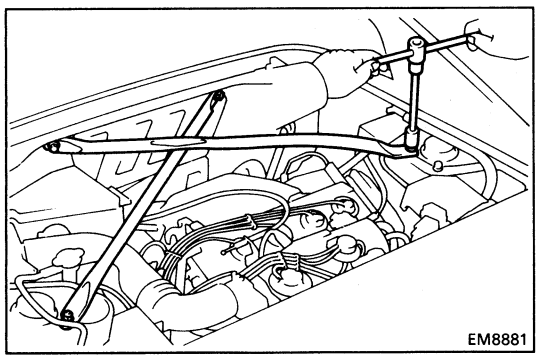

8. **REMOVE SUSPENSION UPPER BRACE**

   Remove the two bolts, two nuts and upper brace.

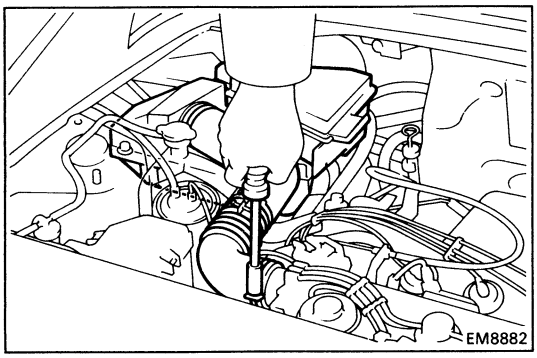

9. **REMOVE AIR CLEANER ASSEMBLY**
   (a) Disconnect the intake air temperature sensor connector.
   (b) Disconnect the four air cleaner cap clips.
   (c) Disconnect the air cleaner hose from the throttle body, and remove the air cleaner cap and element.
   (d) Remove the three bolts and air cleaner case.

10. **DISCONNECT ACCELERATOR CABLE FROM THROTTLE BODY**

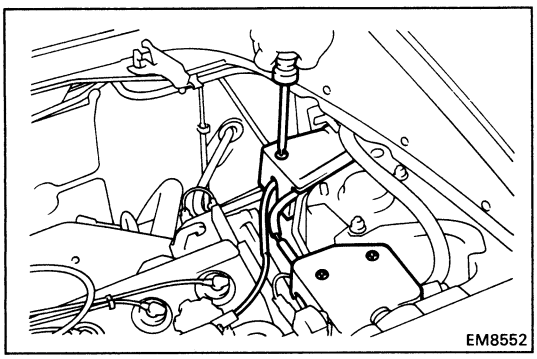

11. **REMOVE CRUISE CONTROL ACTUATOR (w/ CRUISE CONTROL SYSTEM) AND LINKAGE**
    (a) Remove the two screws and actuator cover.
    (b) Remove the screw and accelerator linkage cover.
    (c) Remove the three bolts and actuator.
    (d) Disconnect the actuator connector
    (e) Remove the three bolts and accelerator linkage.
    (f) Disconnect the cable from the accelerator linkage.

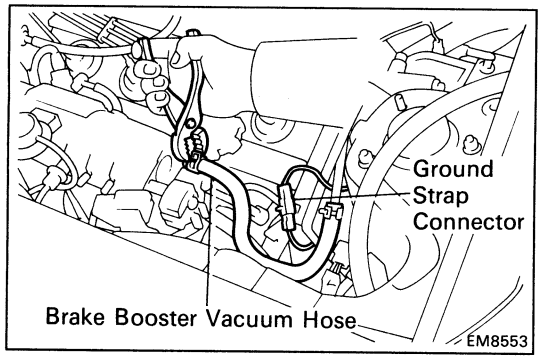

12. DISCONNECT BRAKE BOOSTER VACUUM HOSE

13. DISCONNECT GROUND STRAP CONNECTOR

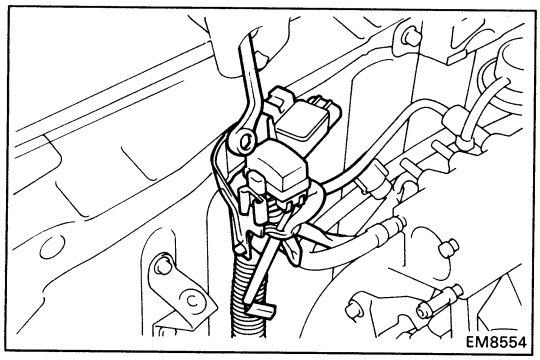

14. REMOVE CHECK CONNECTOR AND VACUUM SENSOR

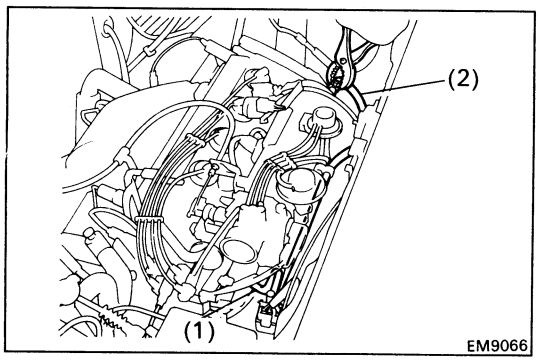

15. REMOVE A/C VSV

(a) Disconnect the A/C VSV connector.

(b) Disconnect the following hoses:

(1) Air hose from ISC valve

(2) Vacuum hose from intake manifold

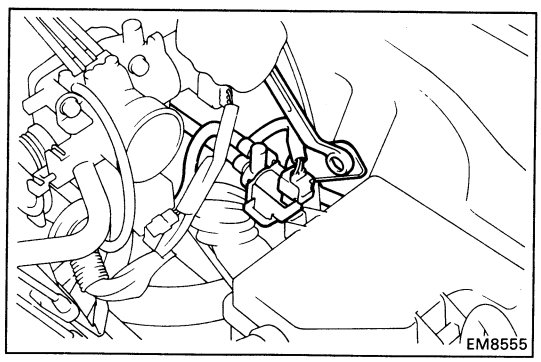

(c) Remove the two bolts and A/C VSV.

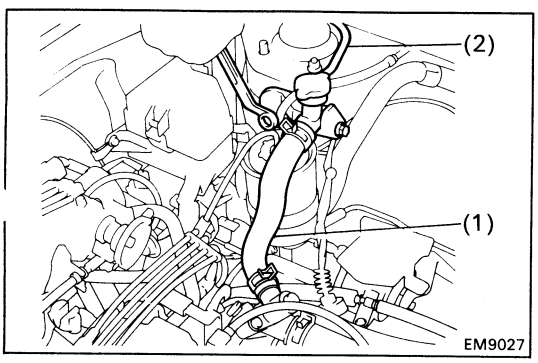

16. REMOVE WATER FILLER

(a) Disconnect the following hose:

(1) Water filler hose

(2) Coolant reservoir hose

(b) Remove the two bolts and water filler.

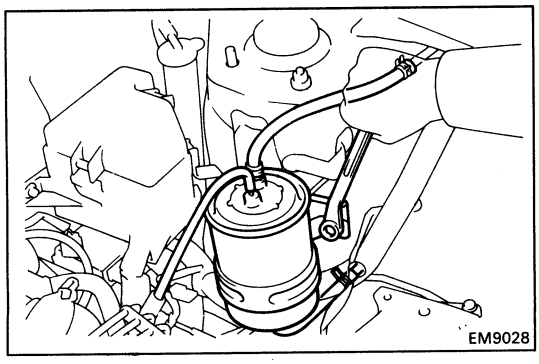

17. REMOVE CHARCOAL CANISTER

(a) Disconnect the three vacuum hoses.

(b) Remove the two bolts and charcoal canister.

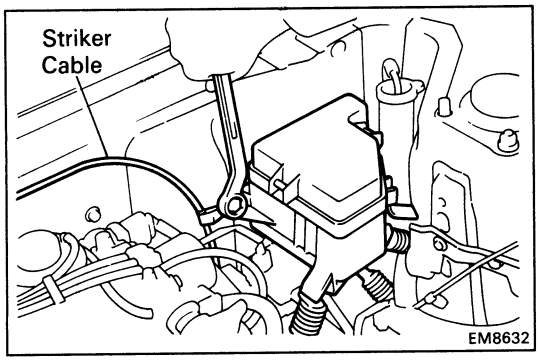

18. REMOVE ENGINE RELAY BOX, AND DISCONNECT ENGINE WIRE

(a) Remove the two bolts and relay box. Disconnect the luggage compartment striker cable.

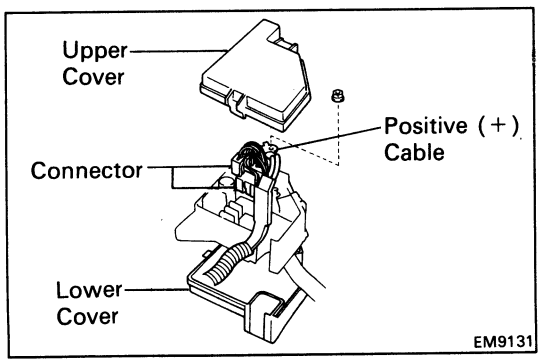

(b) Remove the upper and lower covers from the relay box.

(c) Disconnect the positive (+) cable and two connectors of the engine wire from the relay box.

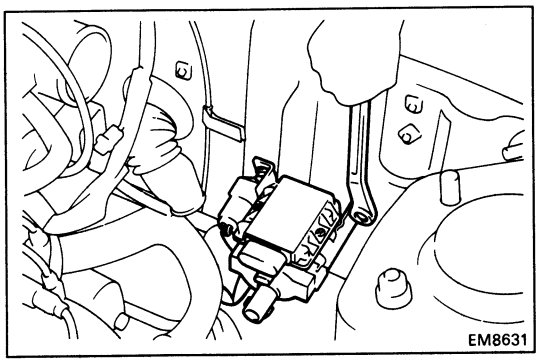

19. REMOVE IGNITION COIL AND IGNITER

(a) Disconnect the ignition coil connector.

(b) Disconnect the igniter connector.

(c) Disconnect the high-tension cord.

(d) Remove the two bolts, the ignition coil and igniter assembly. Disconnect the noise filter.

20. DISCONNECT ENGINE WIRE FROM LUGGAGE COMPARTMENT

(a) Disconnect the following connectors:
(1) Two engine ECU connectors
(2) Starter relay connector
(3) Engine compartment wire connector

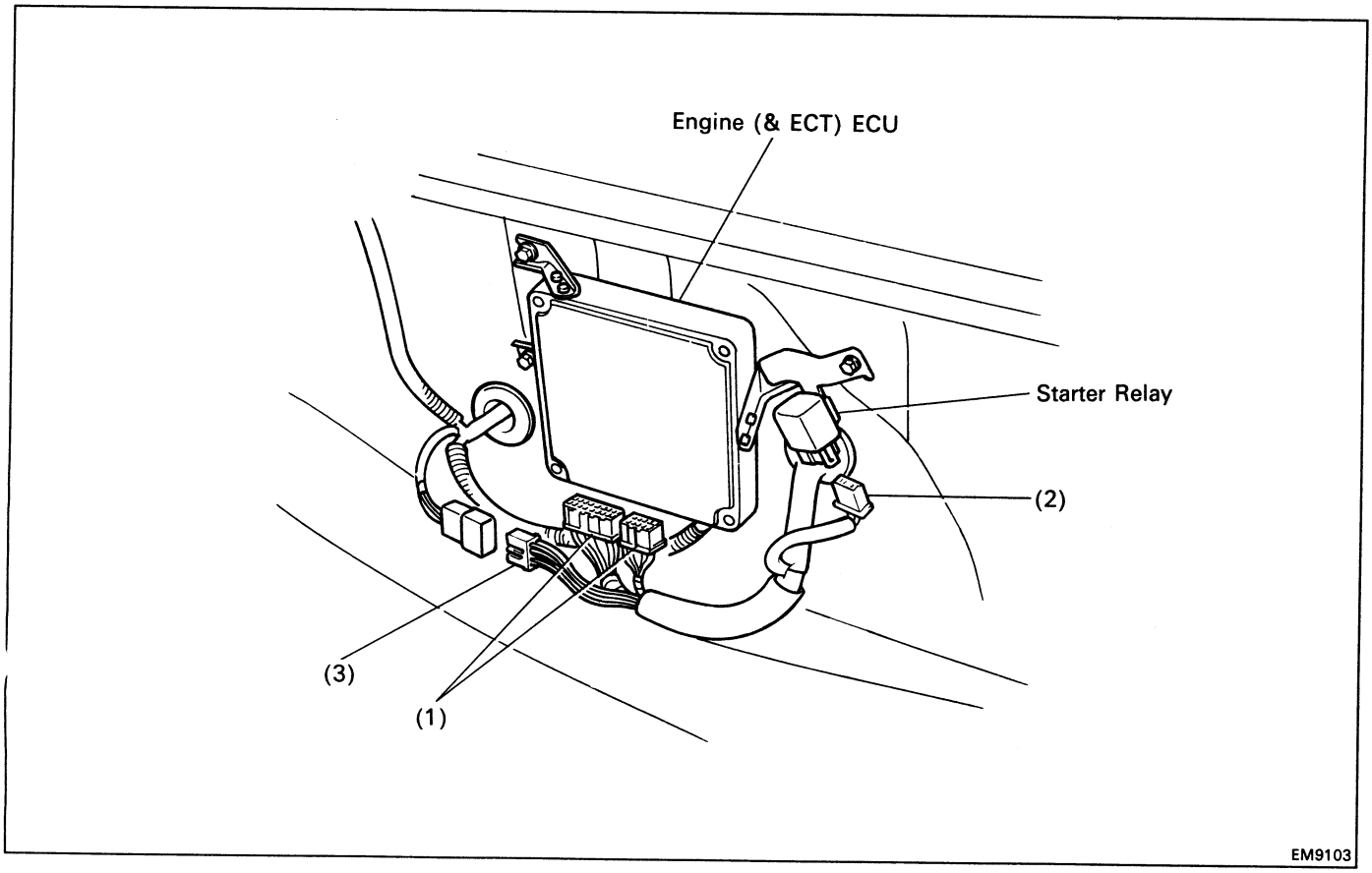

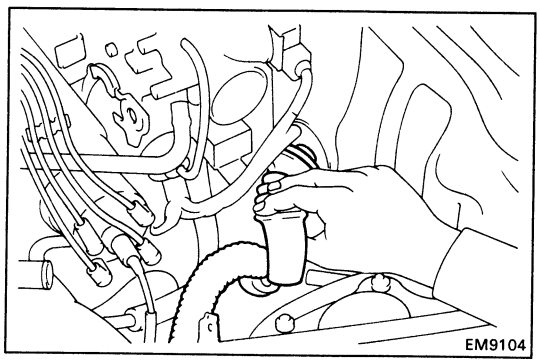

(b) Pull out the engine wire from the luggage compartment.

21. DISCONNECT STARTER CABLE

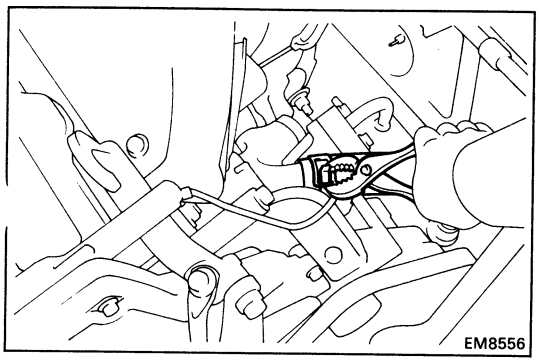

22. DISCONNECT RADIATOR HOSE FROM WATER INLET

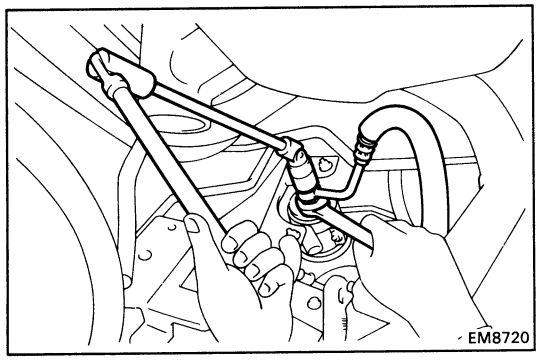

23. DISCONNECT FUEL INLET HOSE

CAUTION: Catch leaking fuel in a container.

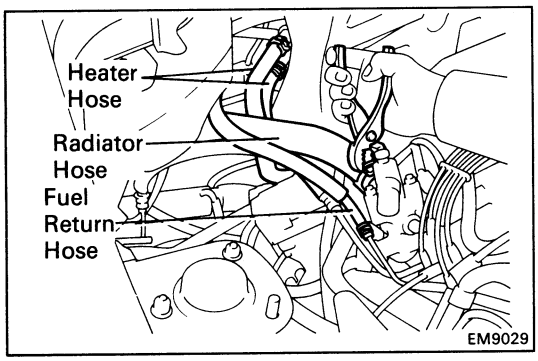

24. DISCONNECT FUEL RETURN HOSE

CAUTION: Catch leaking fuel in a container.

25. DISCONNECT RADIATOR HOSE FROM WATER OUTLET HOUSING

26. DISCONNECT HEATER HOSES

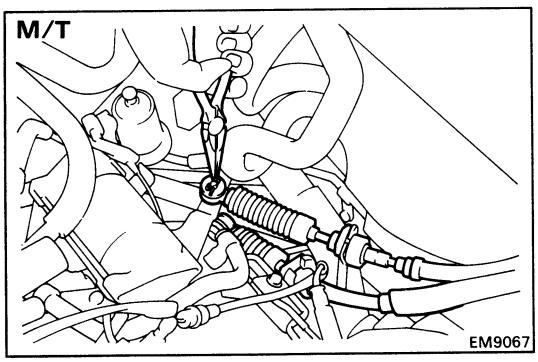

27. DISCONNECT TRANSAXLE CONTROL CABLE(S) FROM TRANSAXLE

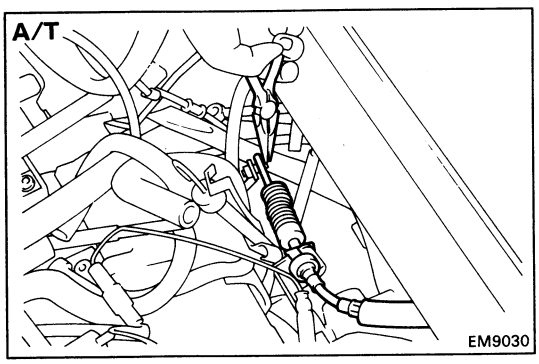

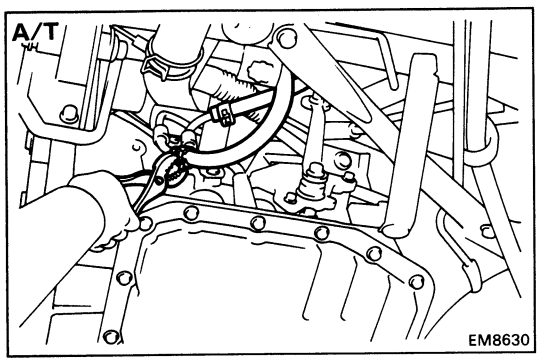

28. (A/T)
DISCONNECT TRANSAXLE OIL COOLER HOSES

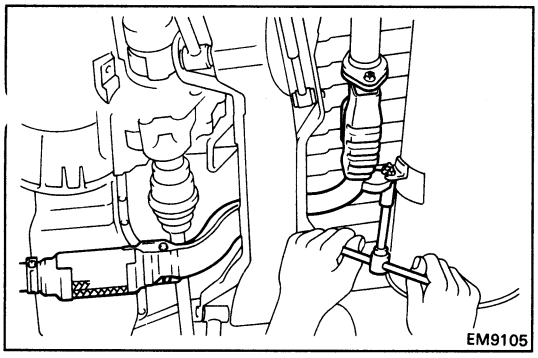

29. REMOVE FRONT EXHAUST PIPE

(a) Remove the two bolts holding the front exhaust pipe to the tailpipe stopper bracket.

(b) Remove the two bolts holding the front exhaust pipe to the tailpipe. Remove the gasket.

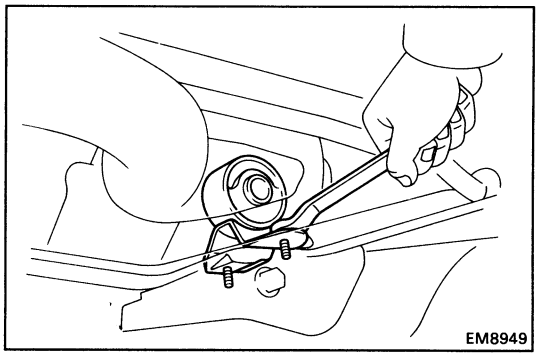

(c) Remove the two bolts and support bracket.

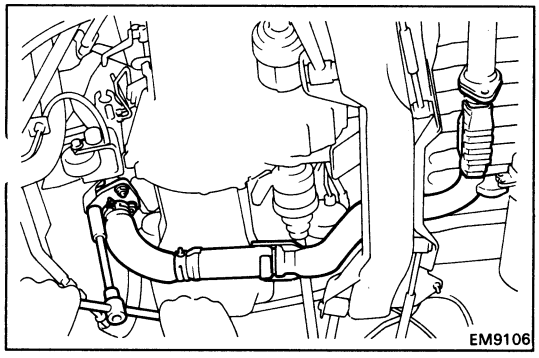

(d) Using a 14 mm deep socket wrench, remove the three nuts, exhaust pipe and gasket.

30. REMOVE DRIVE SHAFT (See pages SA-39 to 41)

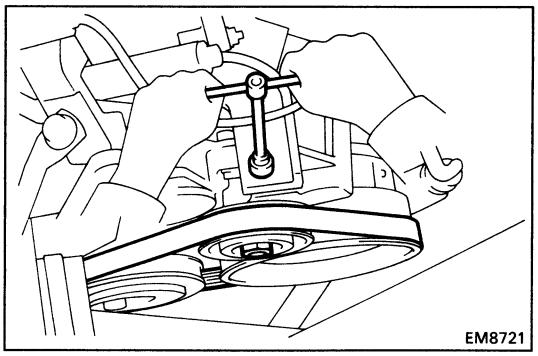

31. REMOVE IDLER PULLEY BRACKET AND A/C COMPRESSOR WITHOUT DISCONNECTING HOSES

(a) Disconnect the idler pulley bolt and adjusting bolt, and remove the drive belt.

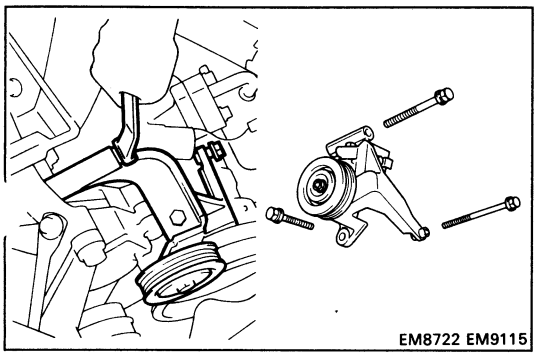

(b) Disconnect the A/C compressor connector.

(c) Remove the bolt and the wire clamp of the A/C compressor.

(d) Remove the three bolts and idler pulley bracket.

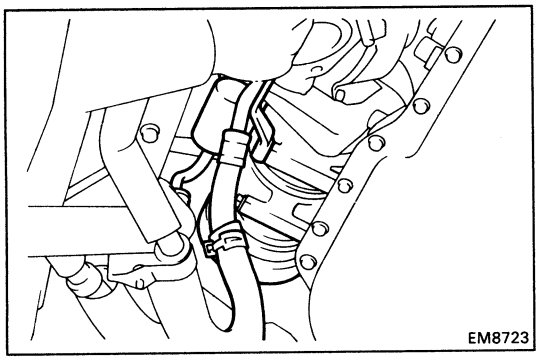

(e) Remove the two bolts, and disconnect the A/C compressor from the engine.

HINT: Put aside the compressor, and suspend it to the radiator support with a string.

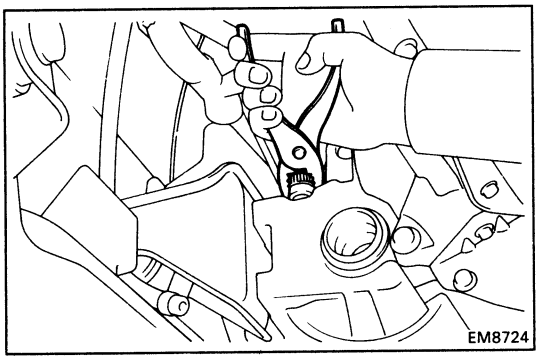

32. DISCONNECT SPEEDOMETER CABLE

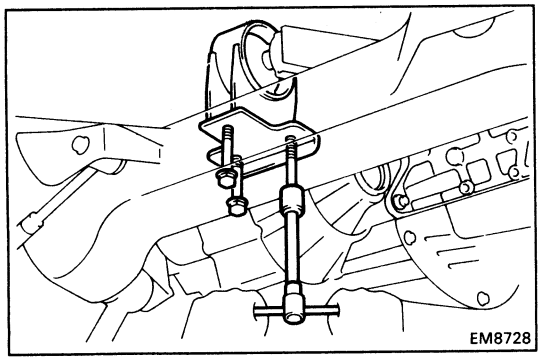

33. REMOVE REAR ENGINE MOUNTING INSULATOR

(a) Remove the through bolt holding the mounting insulator to the mounting bracket.

(b) Remove the three bolts and mounting insulator.

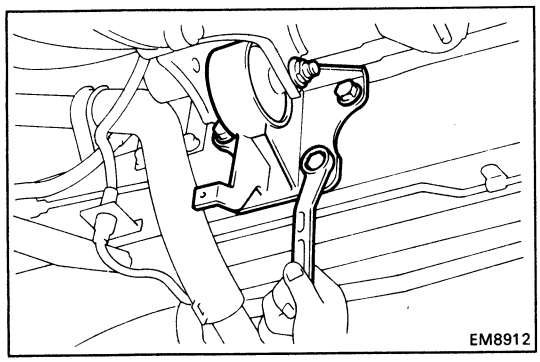

34. REMOVE FRONT ENGINE MOUNTING INSULATOR

(a) Remove the through bolt and nut holding the mounting insulator to the mounting bracket.

(b) Remove the four bolts and mounting insulator.

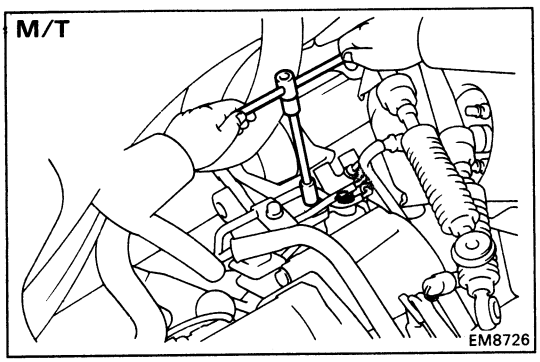

35. REMOVE FRONT ENGINE MOUNTING BRACKET, CLUTCH RELEASE CYLINDER (M/T) AND TRANSAXLE CONTROL CABLE (A/T)

(a) (M/T)
Remove the bolt and nut holding the clutch release cylinder to the transaxle.

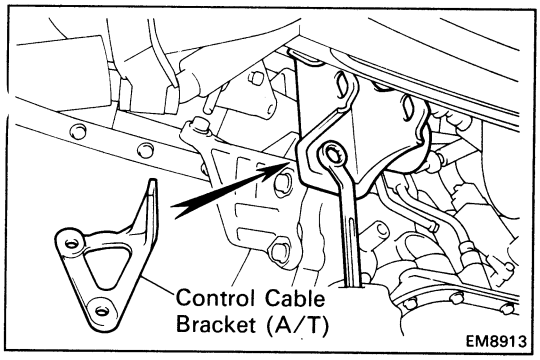

(b) Remove the two bolts and mounting bracket and control cable bracket (A/T).

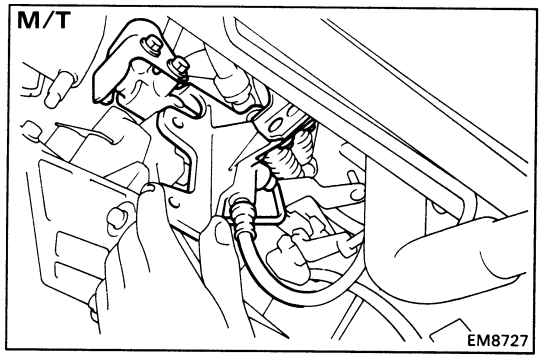

(c) (M/T)
Disconnect the clutch release cylinder without disconnecting the tube.

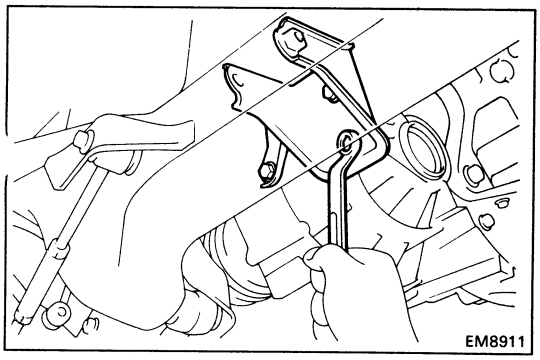

36. REMOVE REAR ENGINE MOUNTING BRACKET

Remove the three bolts and mounting bracket.

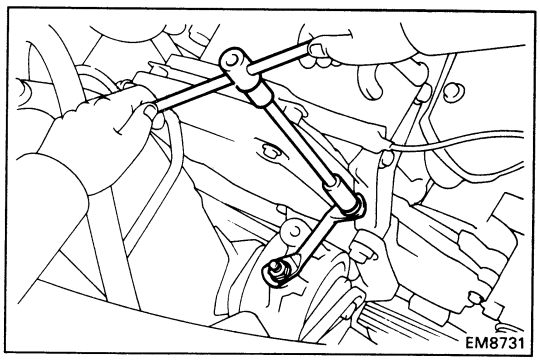

37. REMOVE RH ENGINE MOUNTING STAY

Remove the bolt, nut and mounting stay.

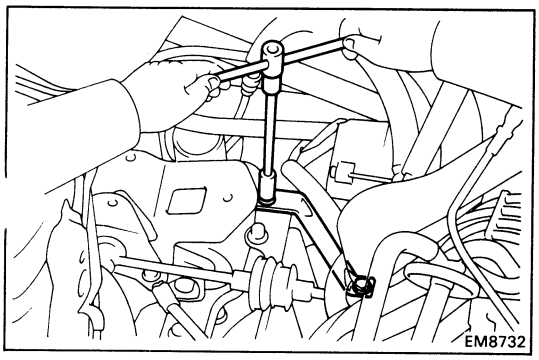

38. (M/T)
REMOVE LH ENGINE MOUNTING STAY

Remove the two bolts, speedometer cable clamp and mounting stay.

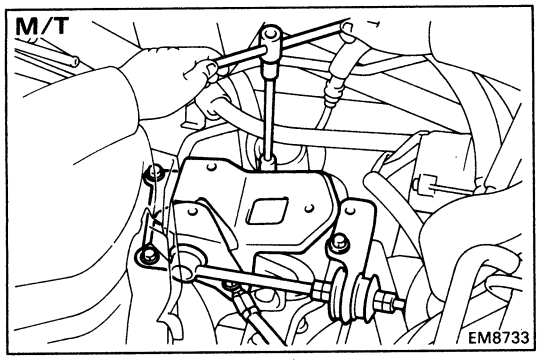

39. REMOVE LATERAL CONTROL ROD (M/T) AND AIR CLEANER CASE BRACKET

(M/T)

Remove the five bolts, the control rod and case bracket. Disconnect the charcoal canister tube and ground strap (from the transaxle).

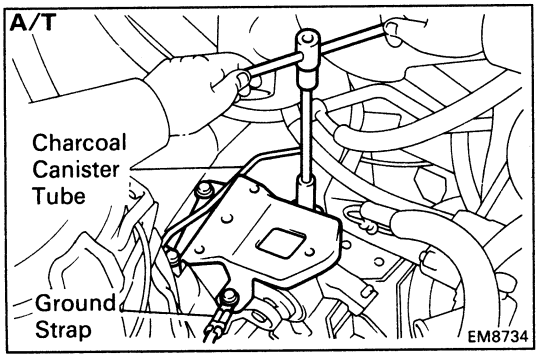

(A/T)

Remove the four bolts and case bracket. Disconnect the charcoal canister tube and ground strap (from the transaxle).

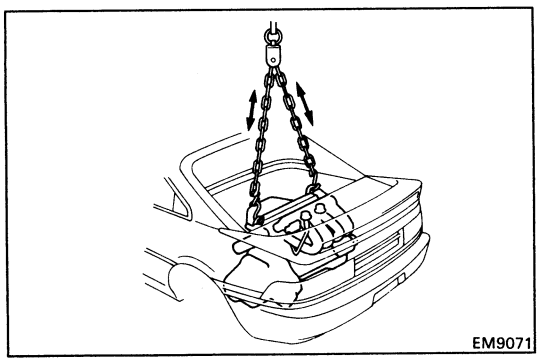

40. REMOVE ENGINE AND TRANSAXLE ASSEMBLY FROM VEHICLE

(a) Attach the engine chain hoist to the engine hangers.

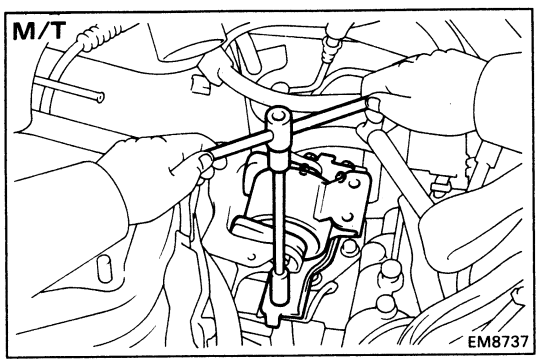

(b) Remove the three (M/T) or four (A/T) bolts holding the LH mounting insulator to the transaxle.

(c) Remove the through bolt, nut and LH mounting insulator.

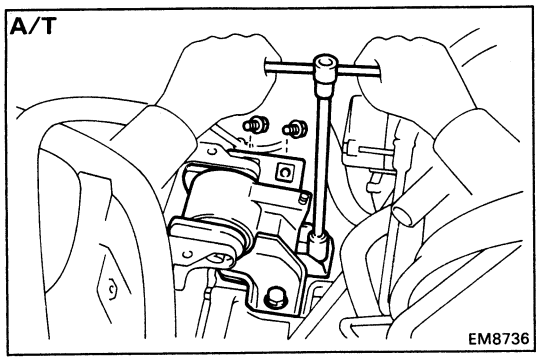

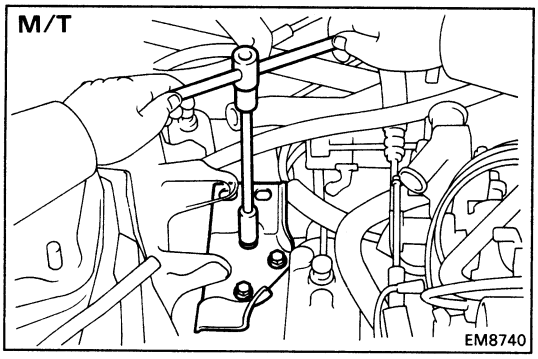

(d) Remove the three (M/T), two (A/T) bolts and LH mounting bracket.

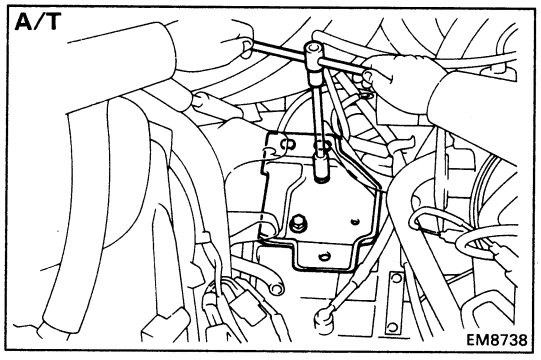

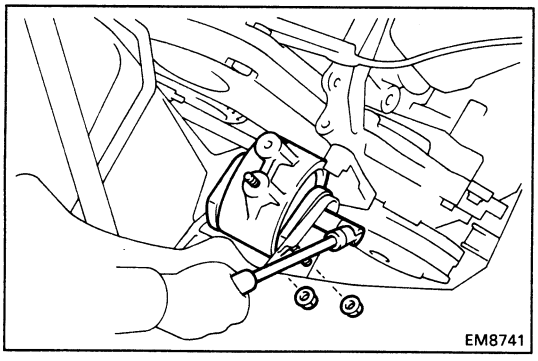

(e) Remove the two nuts holding the RH mounting insulator to the mounting bracket.

(f) Remove the through bolt and RH mounting insulator.

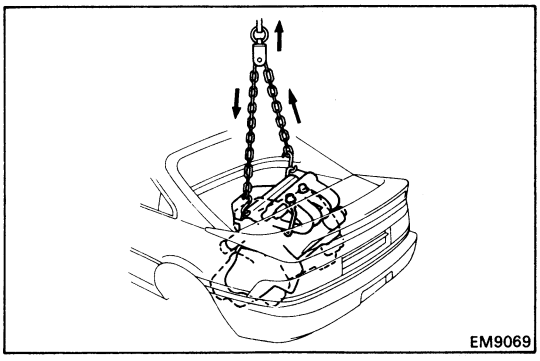

(g) Lift the engine out of the vehicle slowly and carefully.

HINT: Make sure the engine is clear of all wiring, hoses and cables.

(h) Place the engine and transaxle assembly onto the stand.

41. REMOVE STARTER (See page ST-4)

42. SEPARATE ENGINE AND TRANSAXLE
M/T (See pages MT-5 and 6)
A/T (See page AT-41)

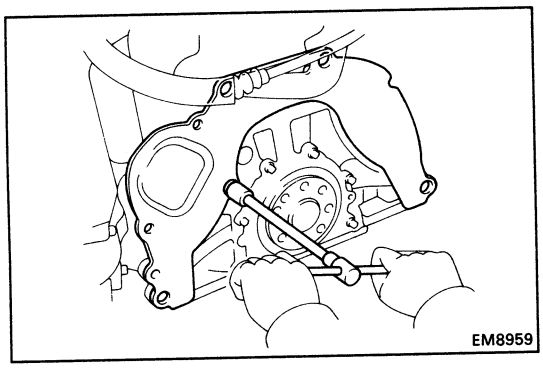

PREPARATION FOR DISASSEMBLY

1. **REMOVE CLUTCH COVER AND DISC**
2. **REMOVE FLYWHEEL**
3. **REMOVE REAR END PLATE**
   Remove the bolt and end plate.
4. **INSTALL ENGINE TO ENGINE STAND FOR DISASSEMBLY**

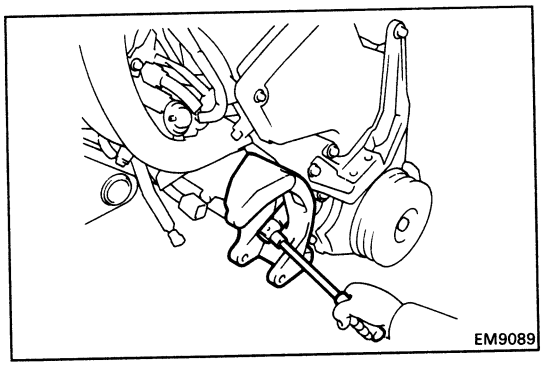

5. **REMOVE ALTERNATOR (See page CH-6)**
6. **REMOVE ALTERNATOR BRACKET**
   Remove the four bolts and mounting bracket.

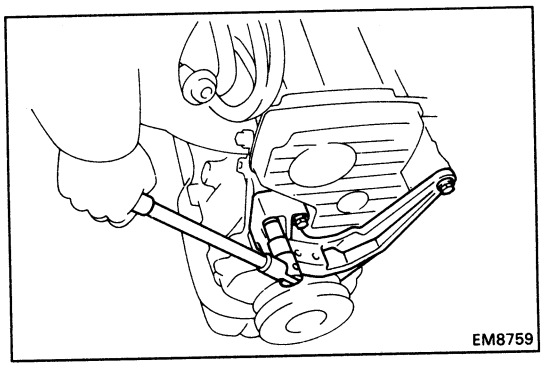

7. **REMOVE RH ENGINE MOUNTING BRACKET**
   Remove the four bolts and mounting bracket.
8. **REMOVE TIMING BELT AND PULLEYS (See pages EM-49 to 53)**
9. **REMOVE CYLINDER HEAD (See pages EM-98 to 107)**
10. **REMOVE WATER PUMP (See page CO-11)**
11. **REMOVE OIL PAN AND OIL PUMP (See pages LU-11 and 12)**
12. **REMOVE OIL FILTER (See page LU-7)**
13. **REMOVE OIL COOLER (See page LU-24)**

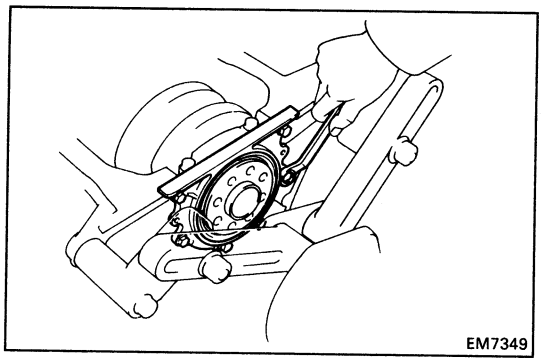

DISASSEMBLY OF CYLINDER BLOCK

(See page EM-181)

1. REMOVE REAR OIL SEAL RETAINER

Remove the six bolts, retainer and gasket.

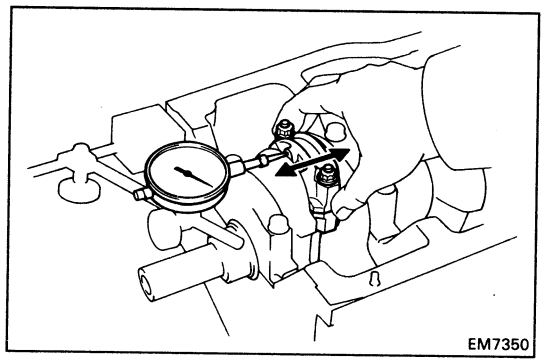

2. CHECK CONNECTING ROD THRUST CLEARANCE

Using a dial indicator, measure the thrust clearance while moving the connecting rod back and forth.

Standard thrust clearance: **0.160 – 0.312 mm (0.0063 – 0.0123 in.)**

Maximum thrust clearance: **0.35 mm (0.0138 in.)**

If the thrust clearance is greater than maximum, replace the connecting rod assembly. If necessary, replace the crankshaft.

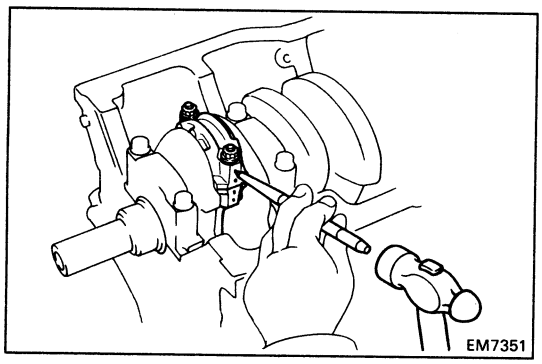

3. REMOVE CONNECTING ROD CAPS AND CHECK OIL CLEARANCE

(a) Using a punch or numbering stamp, place the matchmarks on the connecting rod and cap to ensure correct reassembly.

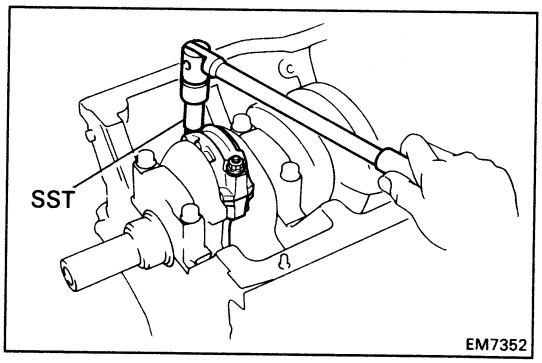

(b) Using SST, remove the connecting rod cap nuts.

SST 09011-38121

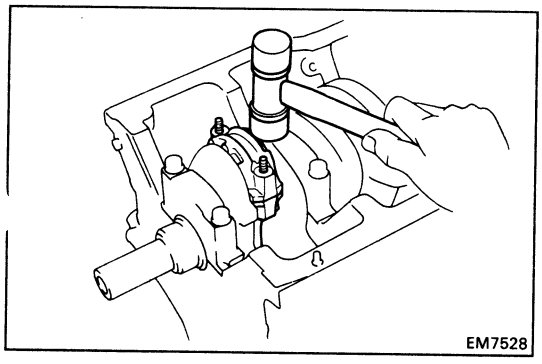

(c) Using a plastic-faced hammer, lightly tap the connecting rod bolts and lift off the connecting rod cap.

HINT: Keep the lower bearing inserted with the connecting cap.

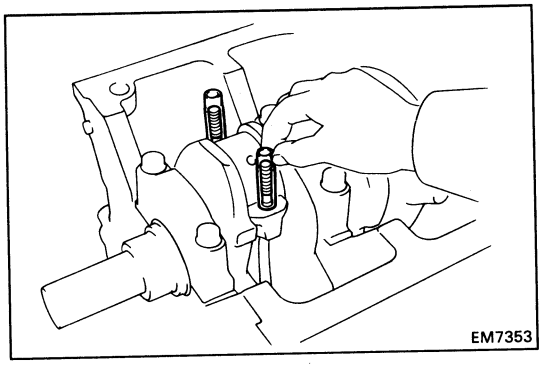

(d) Cover the connecting rod bolts with a short piece of hose to protect the crankshaft from damage.

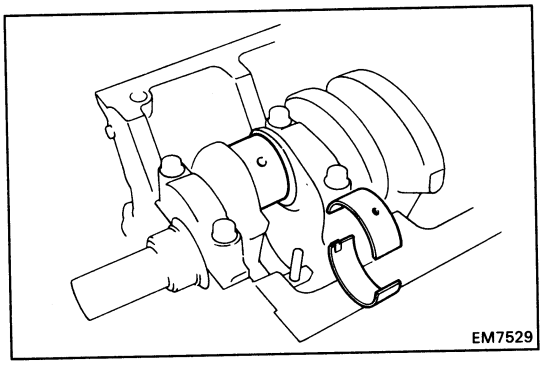

(e) Clean crank pin and bearing.

(f) Check the crank pin and bearing for pitting and scratches.

If the crank pin or bearing is damaged, replace the bearings. If necessary, grind or replace the crankshaft.

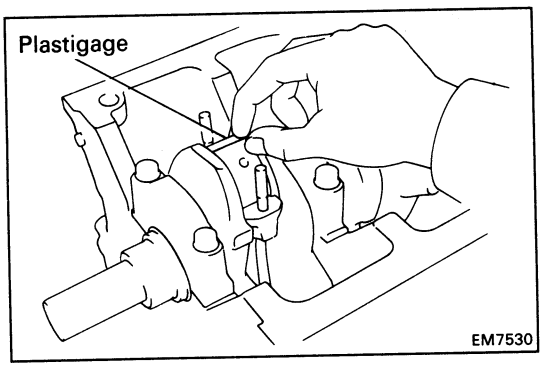

(g) Lay a strip of Plastigage across the crank pin.

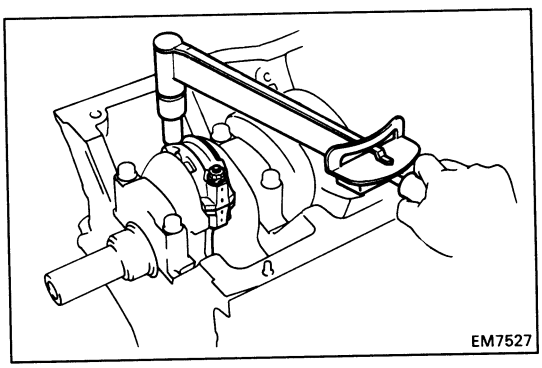

(h) Install the connecting rod cap.
(See step 6 on pages EM-213 and 214)

Torque: 1st 250 kg-cm (18 ft-lb, 25 N·m)
2nd Turn 90°

NOTICE: Do not turn the crankshaft.

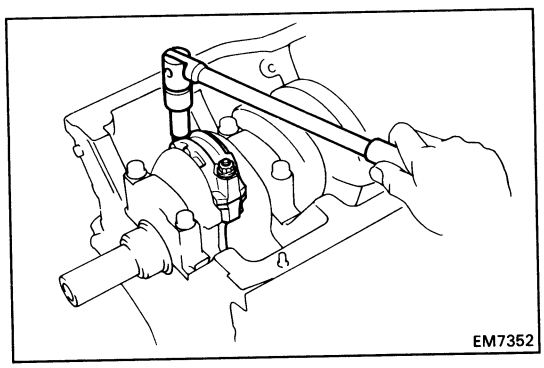

(i) Remove the connecting rod cap.
(See procedures (b) and (c) above)

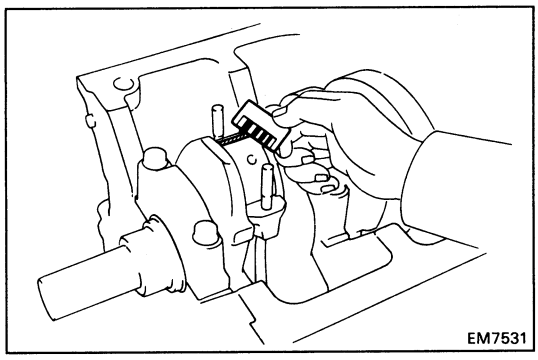

(j) Measure the Plastigage at its widest point.

Standard oil clearance:

STD	**0.024 – 0.055 mm (0.0009 – 0.0022 in.)**
U/S 0.25	**0.023 – 0.069 mm (0.0009 – 0.0027 in.)**

Maximum oil clearance: 0.08 mm (0.0031 in.)

If the oil clearance is greater than maximum, replace the bearings. If necessary, grind or replace the crankshaft.

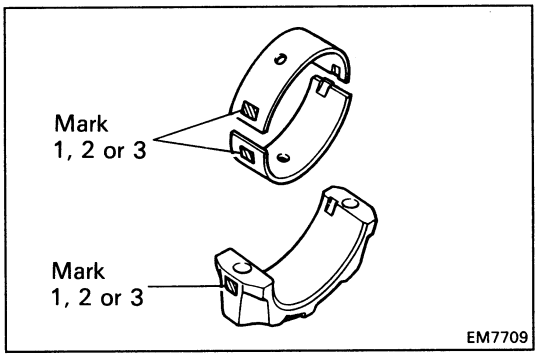

HINT: If using a standard bearing, replace it with one having the same number marked on the connecting rod cap. There are three sizes of standard bearings, marked "1", "2" and "3" accordingly.

Standard sized bearing center wall thickness:

Mark "1"	**1.484 – 1.488 mm (0.0584 – 0.0586 in.)**
Mark "2"	**1.488 – 1.492 mm (0.0586 – 0.0587 in.)**
Mark "3"	**1.492 – 1.496 mm (0.0587 – 0.0589 in.)**

(k) Completely remove the Plastigage.

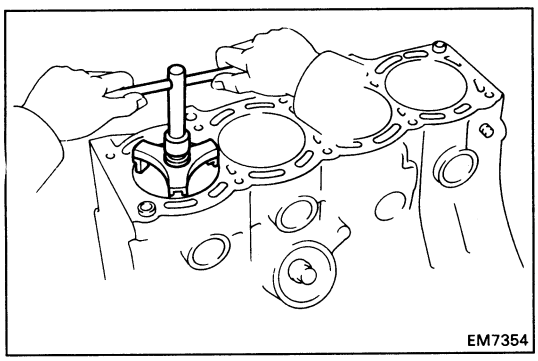

4. REMOVE PISTON AND CONNECTING ROD ASSEMBLIES

(a) Using a ridge reamer, remove all the carbon from the top of the cylinder.

(b) Cover the connecting rod bolts.
(See page EM-194)

(c) Push the piston, connecting rod assembly and upper bearing through the top of the cylinder block.

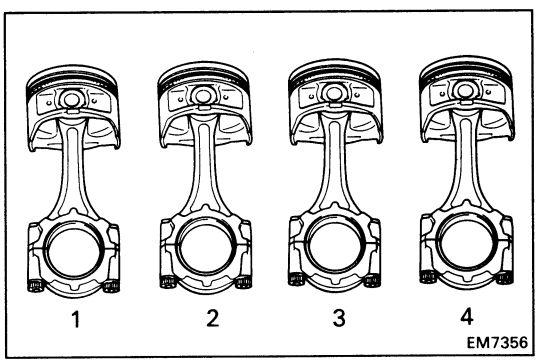

HINT:
- Keep the bearings, connecting rod and cap together.
- Arrange the piston and connecting rod assemblies in correct order.

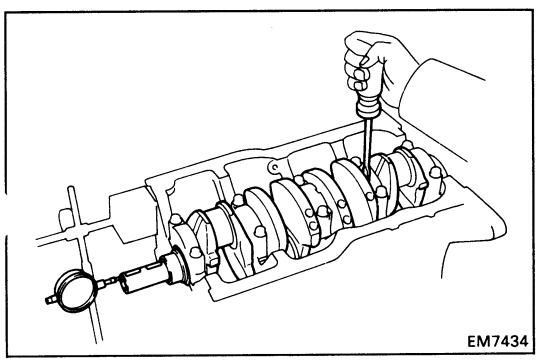

5. CHECK CRANKSHAFT THRUST CLEARANCE

Using a dial indicator, measure the thrust clearance while prying the crankshaft back and forth with a screwdriver.

Standard thrust clearance: 0.020 – 0.220 mm (0.0008 – 0.0087 in.)

Maximum thrust clearance: 0.30 mm (0.0118 in.)

If the thrust clearance is greater than maximum, replace the thrust washers as a set.

Thrust washer thickness: 2.440 – 2.490 mm (0.0961 – 0.0980 in.)

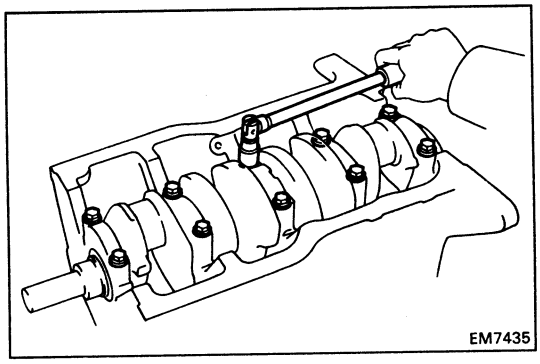

6. REMOVE MAIN BEARING CAPS AND CHECK OIL CLEARANCE

(a) Remove the main bearing cap bolts.

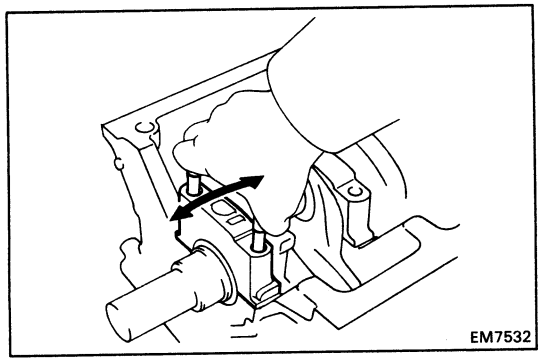

(b) Using the removed main bearing cap bolts, pry the main bearing cap back and forth, and remove the main bearing caps, lower bearings and lower thrust washers (No.3 main bearing cap only).

HINT:

- Keep the lower bearing and main bearing cap together.
- Arrange the main bearing caps and lower thrust washers in correct order.

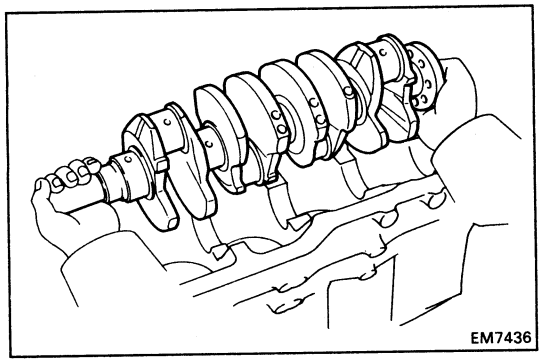

(c) Lift out the crankshaft.

HINT: Keep the upper bearing and upper thrust washers together with the cylinder block.

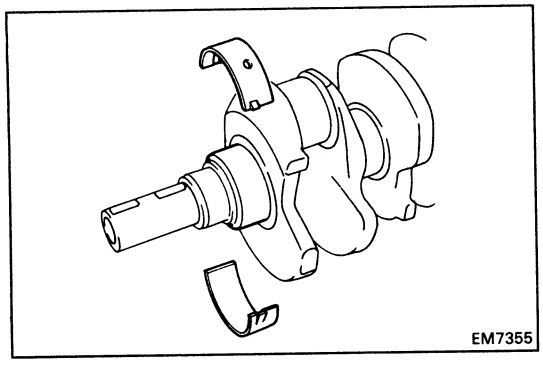

(d) Clean each main journal and bearing.

(e) Check each main journal and bearing for pitting and scratches.

If the journal or bearing is damaged, replace the bearings. If necessary, grind or replace the crankshaft.

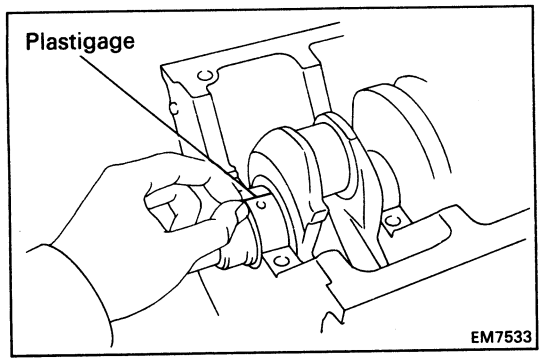

(f) Place the crankshaft on the cylinder block.

(g) Lay a strip of Plastigage across each journal.

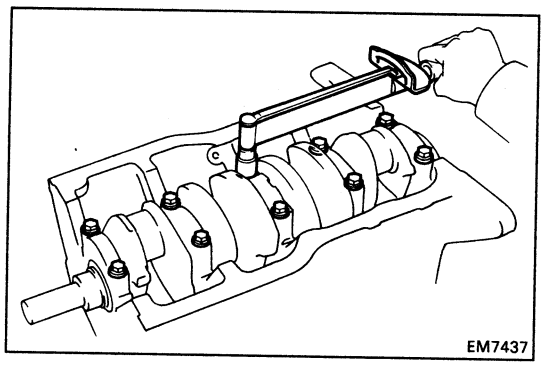

(h) Install the main bearing caps.
(See step 4 on page EM-212)

Torque: 600 kg-cm (43 ft-lb, 59 N·m)

NOTICE: Do not turn the crankshaft.

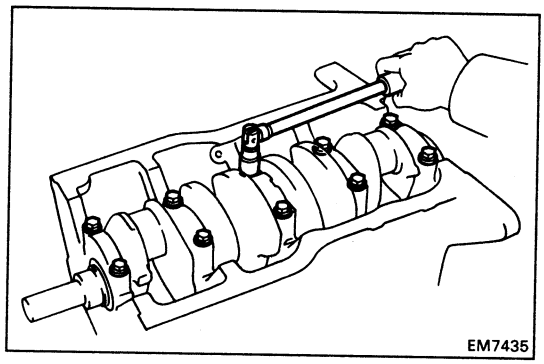

(i) Remove the main bearing caps.
(See procedures (a) and (b) above)

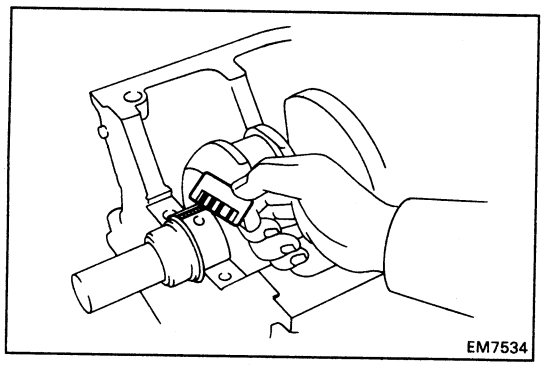

(j) Measure the Plastigage at its widest point.

Standard clearance:

No.3	**STD**	**0.025 – 0.044 mm (0.0010 – 0.0017 in.)**
	U/S 0.25	**0.027 – 0.067 mm (0.0011 – 0.0026 in.)**
Others	**STD**	**0.015 – 0.034 mm (0.0006 – 0.0013 in.)**
	U/S 0.25	**0.019 – 0.059 mm (0.0007 – 0.0023 in.)**

Maximum clearance: 0.08 mm (0.0031 in.)

HINT: If replacing the cylinder block subassembly, the bearing standard clearance will be:

No.3	**0.027 – 0.054 mm (0.0011 – 0.0021 in.)**
Others	**0.017 – 0.044 mm (0.0007 – 0.0017 in.)**

If the oil clearance is greater than maximum, replace the bearings. If necessary, grind or replace the crankshaft.

HINT: If using a standard bearing, replace it with one having the same number. If the number of the bearing cannot be determined, select the correct bearing by adding together the numbers imprinted on the cylinder block and crankshaft, then select the bearing with the same number as the total. There are five sizes of standard bearings, marked "1," "2," "3," "4" and "5" accordingly.

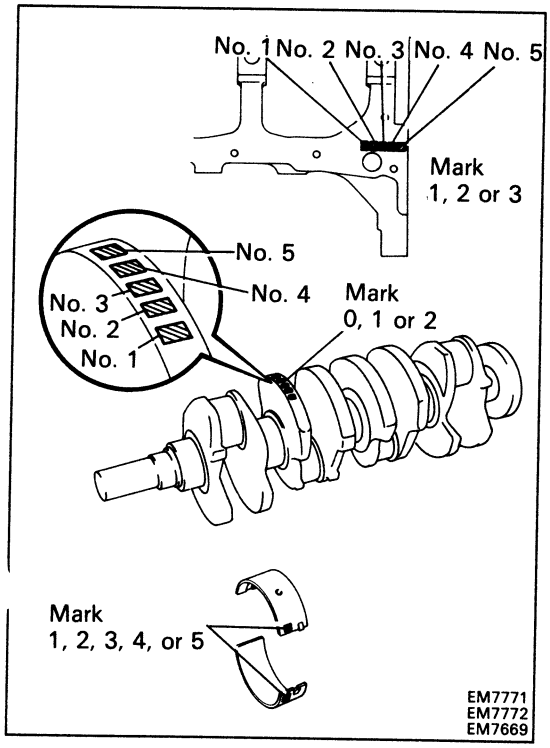

	Number marked								
Cylinder block	1			2			3		
Crankshaft	0	1	2	0	1	2	0	1	2
Bearing	1	2	3	1	2	3	1	2	3

EXAMPLE: Cylinder block "2" + Crankshaft "1" = Bearing "3"

(Reference)
Cylinder block main journal bore diameter:

Mark "1"	59.020 – 59.026 mm (2.3236 – 2.3239 in.)
Mark "2"	59.026 – 59.032 mm (2.3239 – 2.3241 in.)
Mark "3"	59.032 – 59.038 mm (2.3241 – 2.3243 in.)

Crankshaft journal diameter:

Mark "0"	54.998 – 55.003 mm (2.1653 – 2.1655 in.)
Mark "1"	54.993 – 54.998 mm (2.1651 – 2.1653 in.)
Mark "2"	54.988 – 54.993 mm (2.1649 – 2.1651 in.)

Standard sized bearing center wall thickness:

No.3	Mark "1"	1.992 – 1.995 mm (0.0784 – 0.0785 in.)
	Mark "2"	1.995 – 1.998 mm (0.0785 – 0.0787 in.)
	Mark "3"	1.998 – 2.001 mm (0.0787 – 0.0788 in.)
	Mark "4"	2.001 – 2.004 mm (0.0788 – 0.0789 in.)
	Mark "5"	2.004 – 2.007 mm (0.0789 – 0.0790 in.)
Others	Mark "1"	1.997 – 2.000 mm (0.0786 – 0.0787 in.)
	Mark "2"	2.000 – 2.003 mm (0.0787 – 0.0789 in.)
	Mark "3"	2.003 – 2.006 mm (0.0789 – 0.0790 in.)
	Mark "4"	2.006 – 2.009 mm (0.0790 – 0.0791 in.)
	Mark "5"	2.009 – 2.012 mm (0.0791 – 0.0792 in.)

(k) Completely remove the Plastigage.

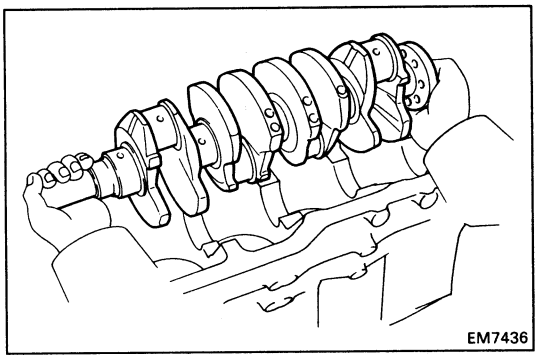

7. REMOVE CRANKSHAFT

(a) Lift out the crankshaft.

(b) Remove the upper bearings and upper thrust washers from the cylinder block.

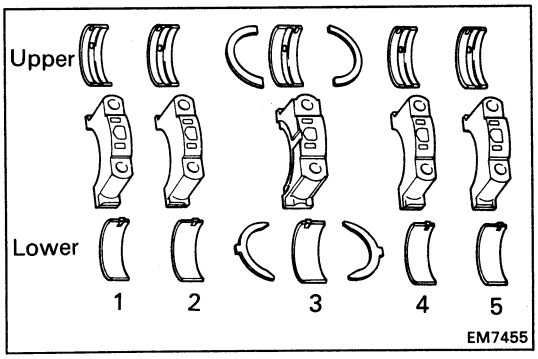

HINT: Arrange the main bearing caps, bearings and thrust washers in correct order.

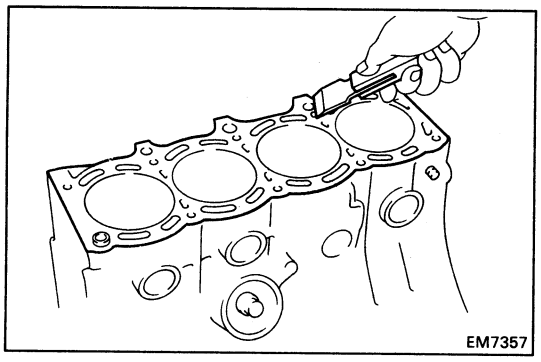

INSPECTION OF CYLINDER BLOCK

1. CLEAN CYLINDER BLOCK

A. Remove gasket material

Using a gasket scraper, remove all the gasket material from the top surface of the cylinder block.

B. Clean cylinder block

Using a soft brush and solvent, thoroughly clean the cylinder block.

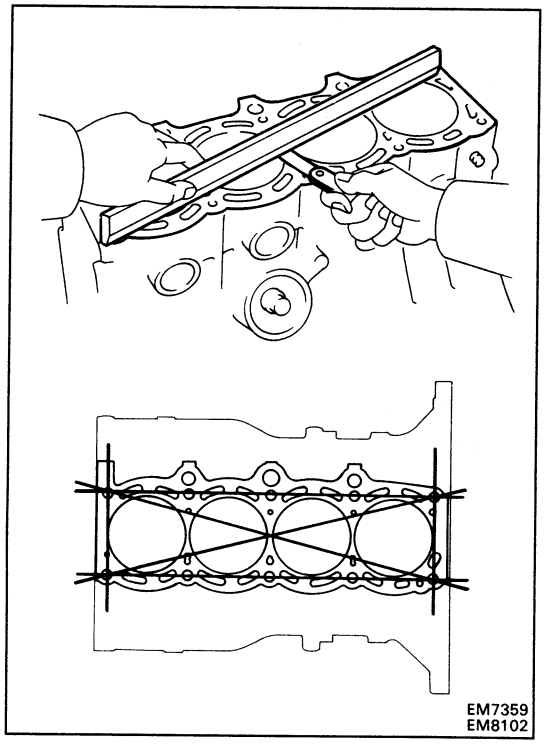

2. INSPECT TOP SURFACE OF CYLINDER BLOCK FOR FLATNESS

Using a precision straight edge and feeler gauge, measure the surfaces contacting the cylinder head gasket for warpage.

Maximum warpage: 0.05 mm (0.0020 in.)

If warpage is greater than maximum, replace the cylinder block.

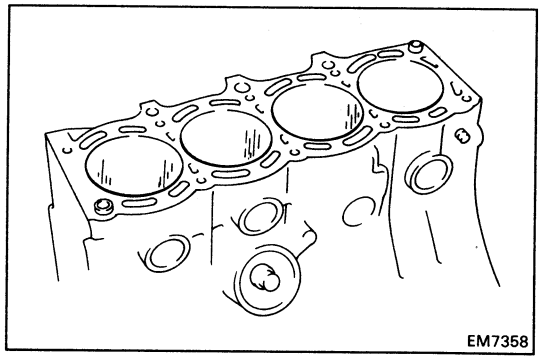

3. INSPECT CYLINDER FOR VERTICAL SCRATCHES

Visually check the cylinder for vertical scratches.

If deep scratches are present, rebore all the four cylinders. If necessary, replace the cylinder block.

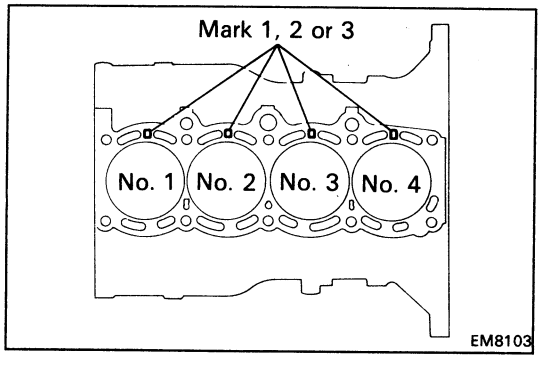

4. INSPECT CYLINDER BORE DIAMETER

HINT: There are three sizes of the standard cylinder bore diameter, marked "1", "2" and "3" accordingly. The mark is stamped on the top of the cylinder block.

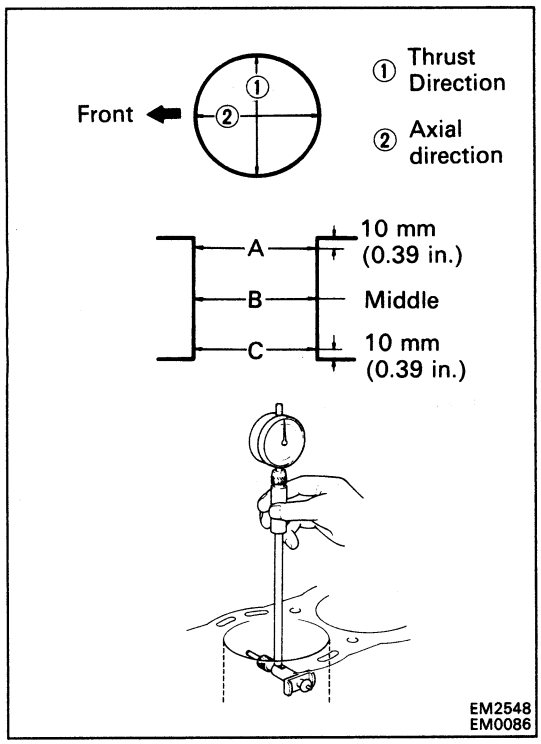

Using a cylinder gauge, measure the cylinder bore diameter at positions A, B and C in the thrust axial directions.

Standard diameter:

STD	**Mark "1"**	**87.000 – 87.010 mm (3.4252 – 3.4256 in.)**
	Mark "2"	**87.010 – 87.020 mm (3.4256 – 3.4260 in.)**
	Mark "3"	**87.020 – 87.030 mm (3.4260 – 3.4264 in.)**

Maximum diameter:

STD	**87.23 mm (3.4342 in.)**
O/S 0.50	**87.73 mm (3.4350 in.)**

If the diameter is greater than maximum, rebore all the four cylinders. If necessary, replace the cylinder block.

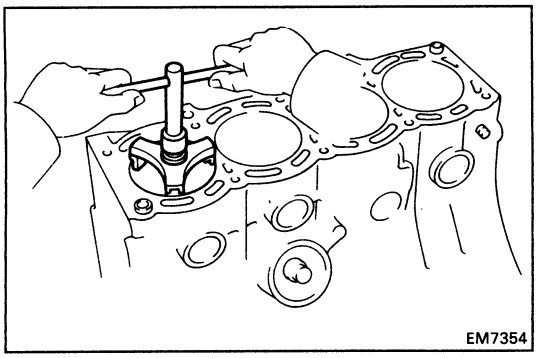

5. REMOVE CYLINDER RIDGE

If the wear is less than 0.2 mm (0.008 in.), using a ridge reamer, grind the top of the cylinder.

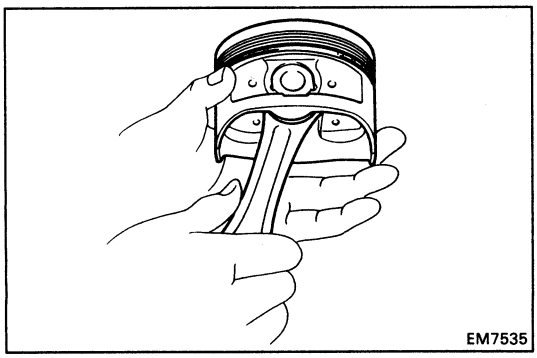

DISASSEMBLY OF PISTON AND CONNECTING ROD ASSEMBLIES

1. CHECK FIT BETWEEN PISTON AND PISTON PIN

Try to move the piston back and forth on the piston pin.

If any movement is felt, replace the piston and pin as a set.

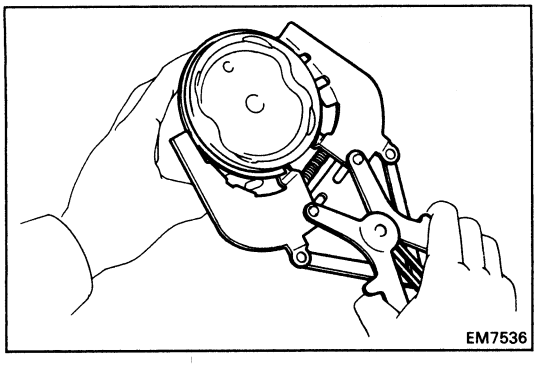

2. REMOVE PISTON RINGS

(a) Using a piston ring expander, remove the two compression rings.

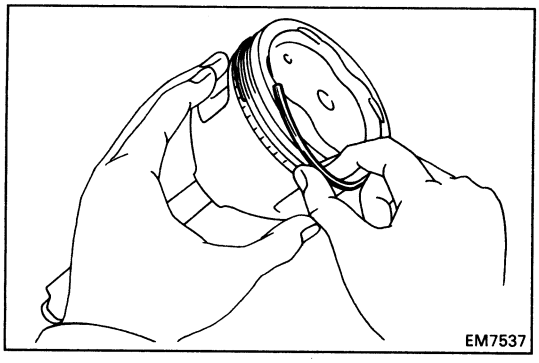

(b) Remove the two side rails and oil ring expander by hand.

HINT: Arrange the rings in correct order only.

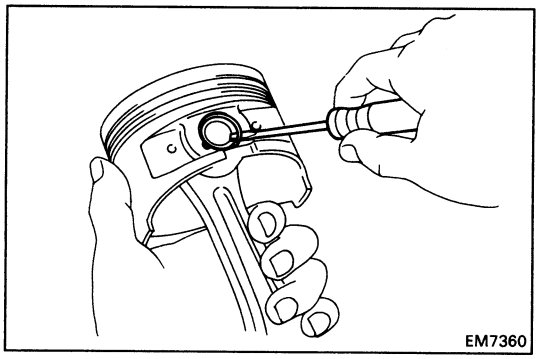

3. **DISCONNECT CONNECTING ROD FROM PISTON**

(a) Using a small screwdriver, pry out the two snap rings.

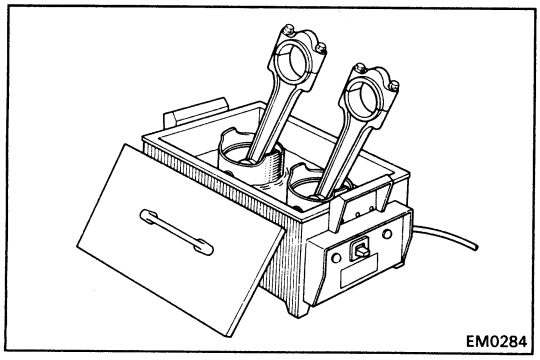

(b) Gradually heat the piston to 80 – 90°C (176 – 194°F).

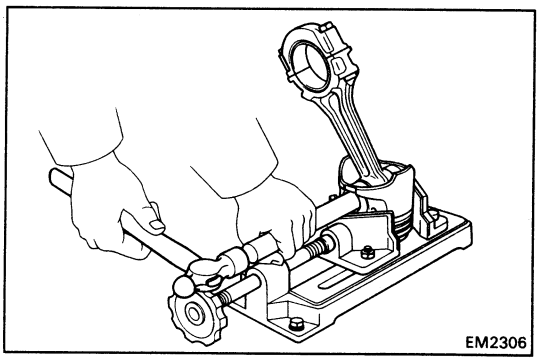

(c) Using plastic-faced hammer and brass bar, lightly tap out the piston pin and remove the connecting rod.

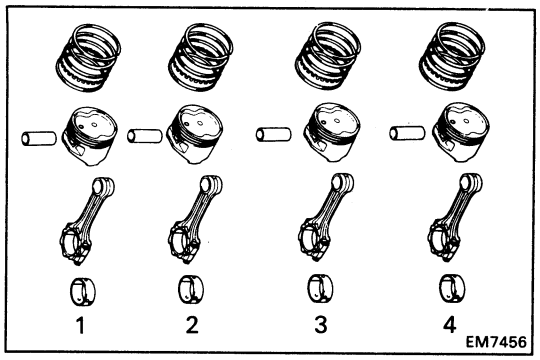

HINT:

- The piston and pin are a matched set.
- Arrange the pistons, pins, rings, connecting rods and bearings in correct order.

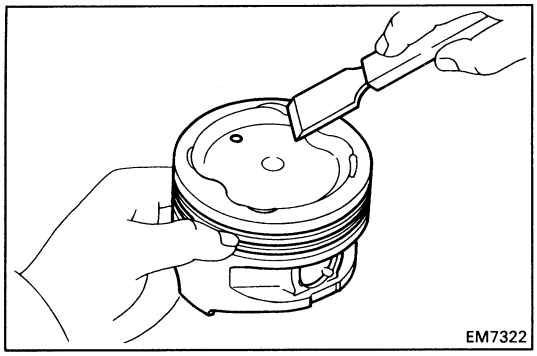

INSPECTION OF PISTON AND CONNECTING ROD ASSEMBLIES

1. CLEAN PISTON

(a) Using a gasket scraper, remove the carbon from the piston top.

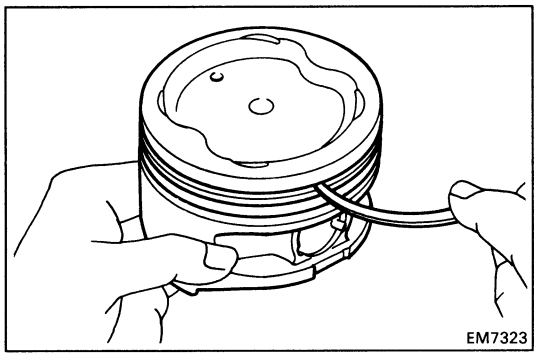

(b) Using a groove cleaner or broken ring, clean the piston ring grooves.

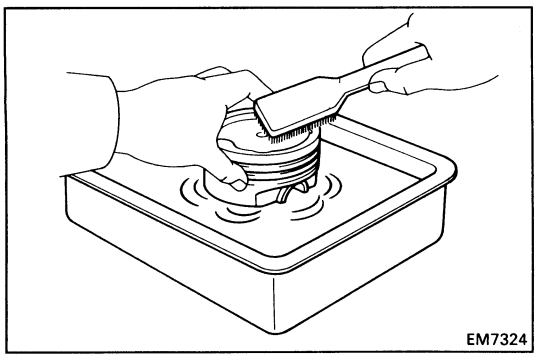

(c) Using solvent and a brush, thoroughly clean the piston.

NOTICE: Do not use a wire brush.

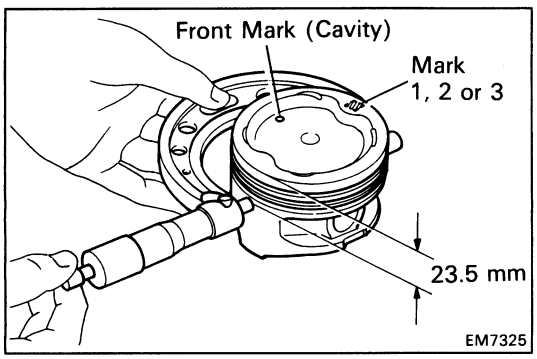

2. INSPECT PISTON

A. Inspect piston oil clearance

HINT: There are three sizes of the standard piston diameter, marked "1", "2" and "3" accordingly. The mark is stamped on the piston top.

(a) Using a micrometer, measure the piston diameter at right angles to the piston pin center line, 23.5 mm (0.925 in.) from the piston head.

Piston diameter:

STD	**Mark "1"**	**86.911 – 86.921 mm (3.4217 – 3.4221 in.)**
	Mark "2"	**86.921 – 86.931 mm (3.4221 – 3.4225 in.)**
	Mark "3"	**86.931 – 86.941 mm (3.4225 – 3.4229 in.)**
O/S 0.50		**87.411 – 87.441 mm (3.4414 – 3.4426 in.)**

(b) Measure the cylinder bore diameter in the thrust directions. (See step 4 on page EM-200)

(c) Subtract the piston diameter measurement from the cylinder bore diameter measurement.

Standard oil clearance: 0.079 – 0.099 mm (0.0031 – 0.0039 in.)

Maximum oil clearance: 0.119 mm (0.0047 in.)

If the oil clearance is greater than maximum, replace all the four pistons and rebore all the four cylinders. If necessary, replace the cylinder block.

HINT (Use new cylinder block): Use a piston with the same number mark as the cylinder bore diameter marked on the cylinder block.

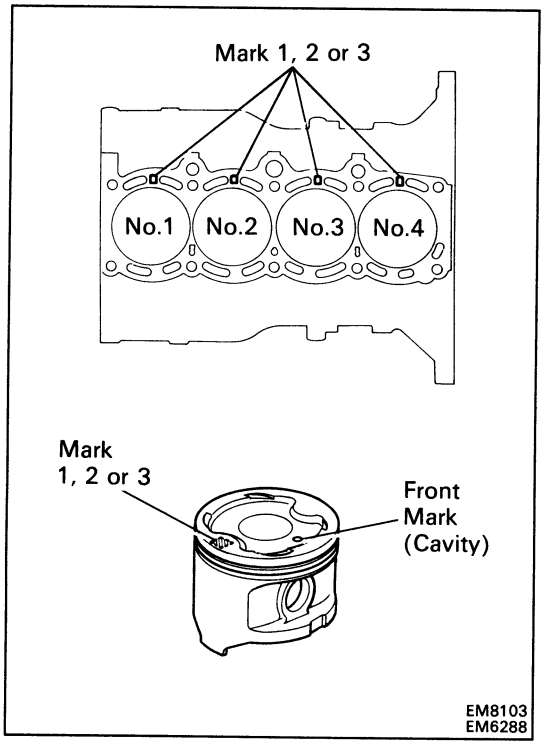

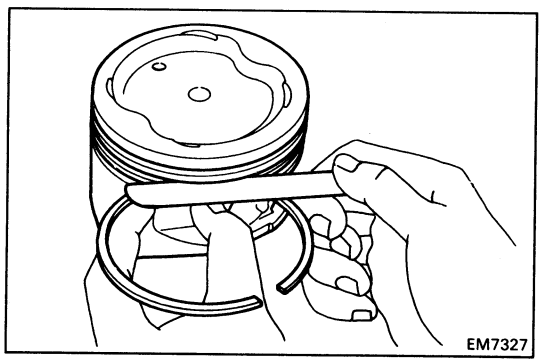

B. Inspect piston ring groove clearance

Using a feeler gauge, measure the clearance between new piston ring and the wall of the piston ring groove.

Ring groove clearance: 0.030 – 0.070 mm (0.0012 – 0.0028 in.)

If the clearance is greater than maximum, replace the piston.

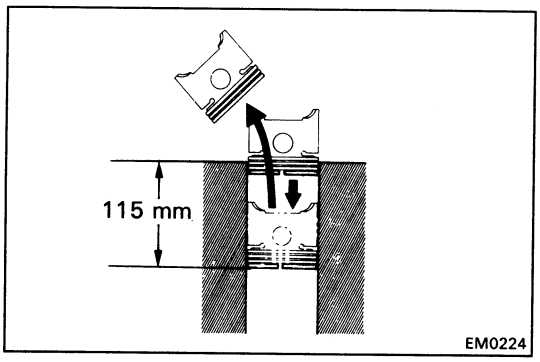

C. Inspect piston ring end gap

(a) Insert the piston ring into the cylinder bore.

(b) Using a piston, push the piston ring a little beyond the bottom of the ring travel, 115 mm (4.53 in.) from the top of the cylinder block.

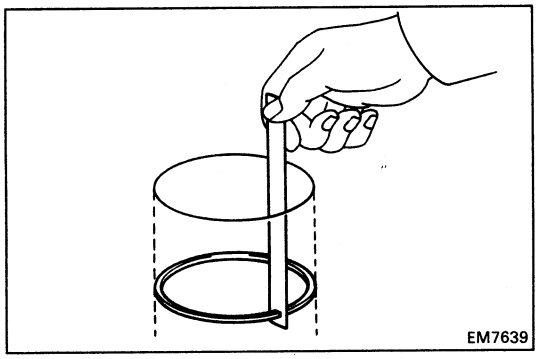

(c) Using a feeler gauge, measure the end gap.

Standard end gap:

No.1	**0.270 – 0.500 mm (0.0106 – 0.0197 in.)**
No.2	**0.350 – 0.600 mm (0.0138 – 0.0234 in.)**
Oil (Side rail)	**0.200 – 0.550 mm (0.0079 – 0.0217 in.)**

Maximum end gap:

No.1	**1.10 mm (0.0433 in.)**
No.2	**1.20 mm (0.0472 in.)**
Oil (Side rail)	**1.15 mm (0.0453 in.)**

If the end gap is greater than maximum, replace the piston ring. If the end gap is greater than maximum, even with a new piston ring, rebore all the four cylinders or replace the cylinder block.

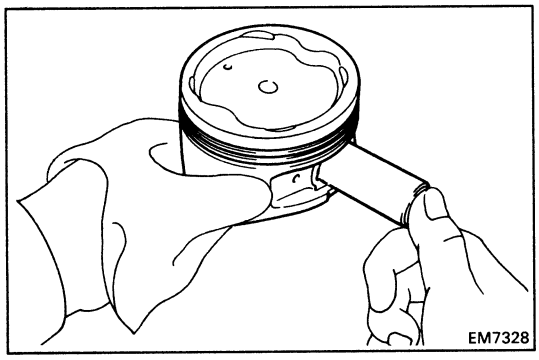

D. Inspect piston pin fit

At 60°C (140°F), you should be able to push the piston pin into the piston pin hole with your thumb.

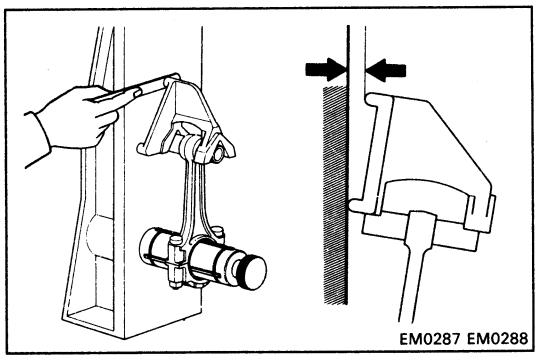

3. INSPECT CONNECTING ROD

A. Inspect connecting rod alignment

Using rod aligner and feeler gauge, check the connecting rod alignment.

- Check for bending.

Maximum bending:

0.05 mm (0.0020 in.) per 100 mm (3.94 in.)

If bend is greater than maximum, replace the connecting rod assembly.

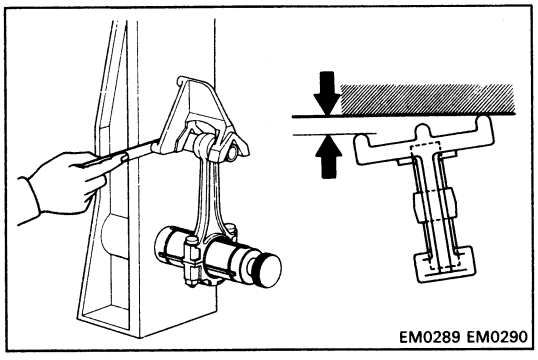

- Check for twist.

Maximum twist:

0.15 mm (0.0059 in.) per 100 mm (3.94 in.)

If twist is greater than maximum, replace the connecting rod assembly.

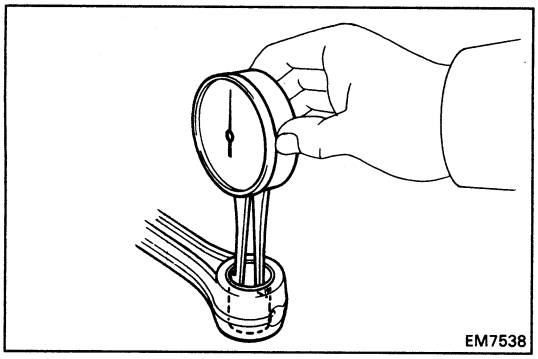

B. Inspect piston pin oil clearance

(a) Using a caliper gauge, measure the inside diameter of the connecting rod bushing.

Bushing inside diameter: 22.005 – 22.017 mm (0.8663 – 0.8668 in.)

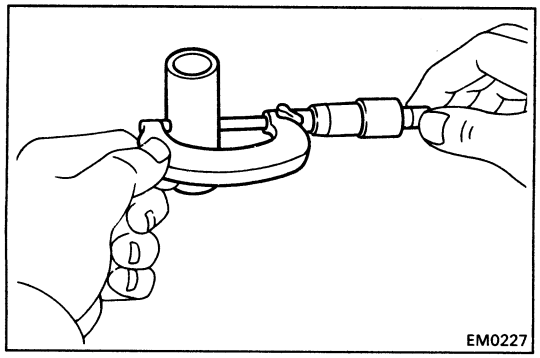

(b) Using a micrometer, measure the piston pin diameter.

Piston pin diameter: 21.997 – 22.009 mm (0.8660 – 0.8665 in.)

(c) Subtract the piston pin diameter measurement from the bushing inside diameter measurement.

Standard oil clearance: 0.005 – 0.011 mm (0.0002 – 0.0004 in.)

Maximum oil clearance: 0.05 mm (0.0020 in.)

If the oil clearance is greater than maximum, replace the bushing. If necessary, replace the piston and piston pin as a set.

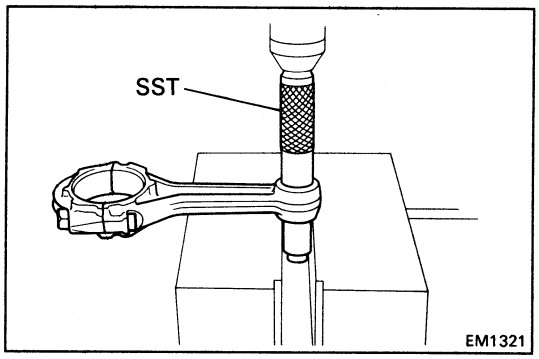

C. If necessary, replace connecting rod bushing

(a) Using SST and a press, press out the bushing.

SST 09222-30010

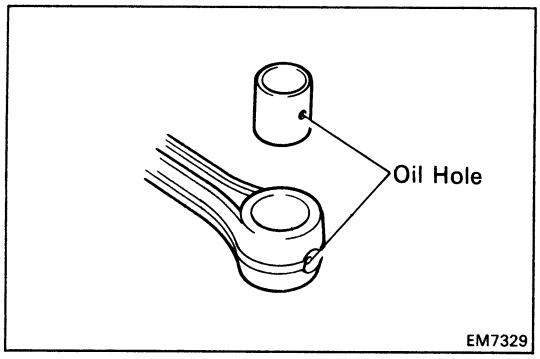

(b) Align the oil holes of a new bushing and the connecting rod.

(c) Using SST and a press, press in the bushing.

SST 09222-30010

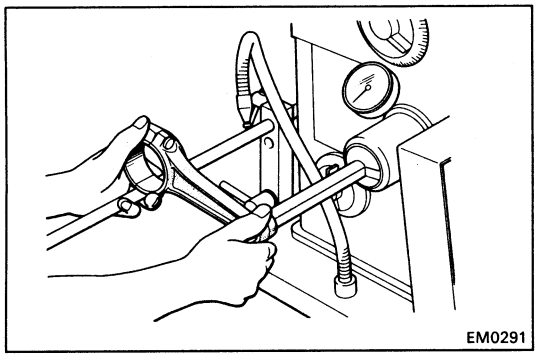

(d) Using a pin hole grinder, hone the bushing to obtain the standard specified clearance (see step B above) between the bushing and piston pin.

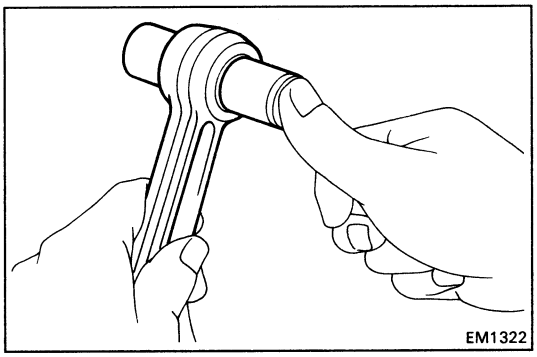

(e) Check the piston pin fit at normal room temperature.

Coat the piston pin with engine oil, and push it into the connecting rod with your thumb.

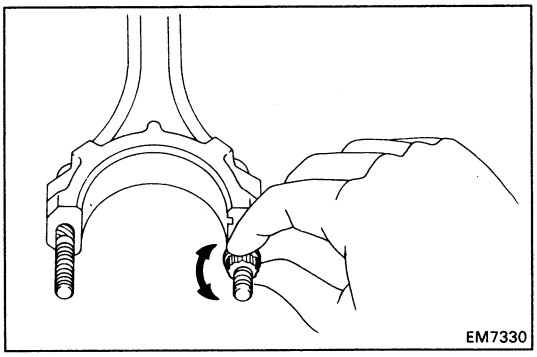

D. Inspect connecting rod bolts

(a) Install the cap nut to the connecting rod bolt. Check that the cap nut can be turned easily by hand to the end of the thread.

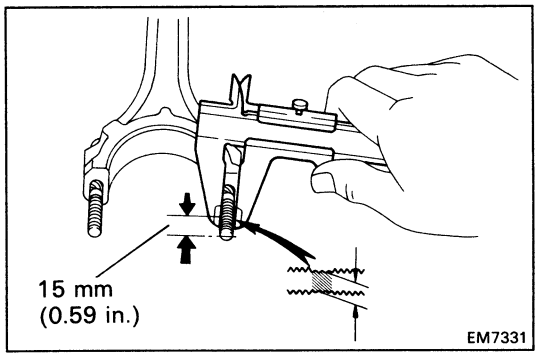

(b) If the cap nut cannot be turned easily, measure the outside diameter of the connecting rod bolt.

Standard diameter: 7.860 – 8.000 mm (0.3094 – 0.3150 in.)

Minimum diameter: 7.60 mm (0.2992 in.)

HINT: If the location of this area cannot be judged by visual inspection, measure the outer diameter at the location shown in the illustration.

If the ouside diameter is less than minimum, replace the connecting rod bolt and cap nut as a set.

BORING OF CYLINDERS

HINT:

- Bore all the four cylinders for the oversized piston outside diameter.
- Replace all the piston rings with ones to match the oversized pistons.

1. KEEP OVERSIZED PISTONS

Oversized piston diameter:

O/S 0.50 87.411 – 87.441 mm
(3.4414 – 3.4426 in.)

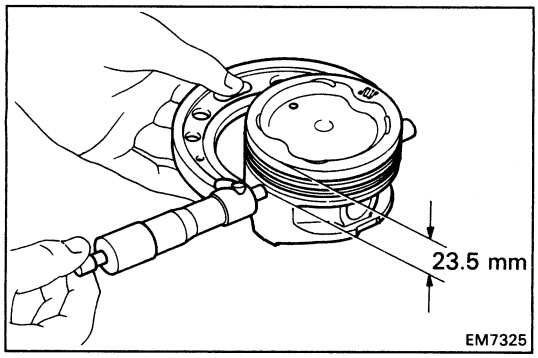

2. CALCULATE AMOUNT TO BORE CYLINDERS

(a) Using a micrometer, measure the piston diameter at right angles to the piston pin center line, 23.5 mm (0.925 in.) from the piston head.

(b) Calculate the amount each cylinder is to be rebored as follows:

Size to be rebored = P + C – H
P = Piston diameter
C = Piston clearance
0.079 – 0.099 mm (0.0031 – 0.0039 in.)
H = Allowance for honing
0.02 mm (0.0008 in.) or less

3. BORE AND HONE CYLINDERS TO CALCULATED DIMENSIONS

Maximum honing: 0.02 mm (0.0008 in.)

NOTICE: Excess honing will destroy the finished roundness.

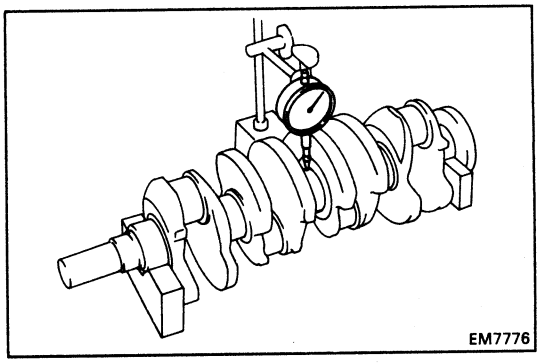

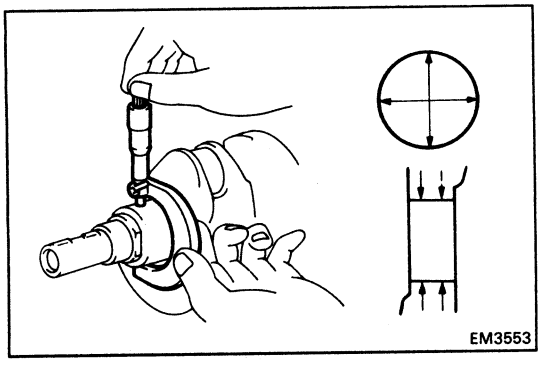

INSPECTION AND REPAIR OF CRANKSHAFT

1. INSPECT CRANKSHAFT FOR RUNOUT

(a) Place the crankshaft on V-blocks.

(b) Using a dial indicator, measure the circle runout at the center journal.

Maximum circle runout: 0.06 mm (0.0024 in.)

If the circle runout is greater than maximum, replace the crankshaft.

2. INSPECT MAIN JOURNALS AND CRANK PINS

(a) Using a micrometer, measure the diameter of each main journal and crank pin.

Main journal diameter:

STD size	**54.988 – 55.003 mm (2.1653 – 2.1655 in.)**
U/S 0.25	**54.745 – 54.755 mm (2.1553 – 2.1557 in.)**

Crank pin diameter:

STD size	**51.985 – 52.000 mm (2.0466 – 2.0472 in.)**
U/S 0.25	**51.745 – 51.755 mm (2.0372 – 2.0376 in.)**

If the diameter is not as specified, check the oil clearance (See pages EM-193 to 197). If necessary, grind or replace the crankshaft.

(b) Check each main journal and crank pin for taper and out-of-round as shown.

Maximum taper and out-of-round:
0.02 mm (0.0008 in.)

If the taper and out-of-round is greater than maximum, replace the crankshaft.

3. IF NECESSARY, GRIND AND HONE MAIN JOURNALS AND/OR CRANK PINS

Grind and hone the main journals and/or crank pins to the finished undersized diameter (See procedure step 2).

Install new main journal and/or crank pin undersized bearings.

REPLACEMENT OF CRANKSHAFT OIL SEALS

(See pages EM-160 and 161)

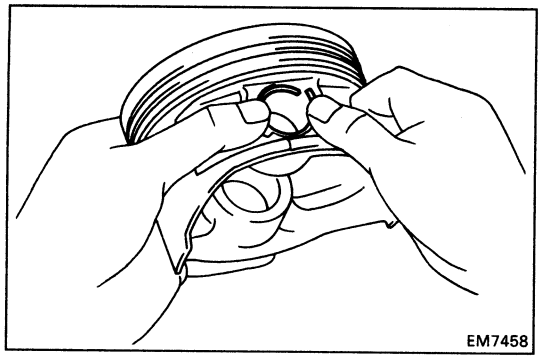

ASSEMBLY OF PISTON AND CONNECTING ROD ASSEMBLIES

1. ASSEMBLE PISTON AND CONNECTING ROD

(a) Install a new snap ring on one side of the piston pin hole.

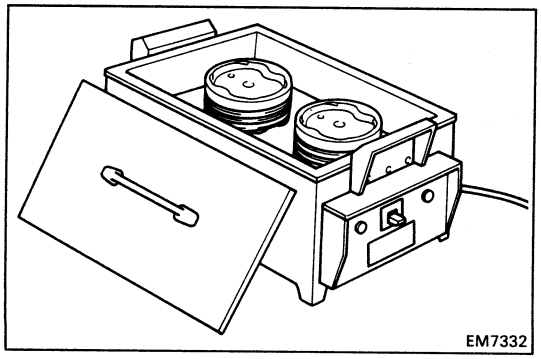

(b) Gradually heat the piston to 80 – 90°C (176 – 194°F).

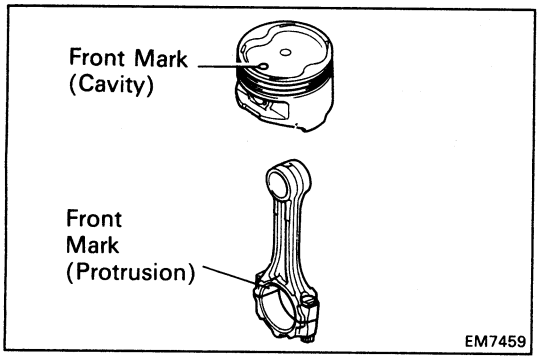

(c) Coat the piston pin with engine oil.

(d) Align the front marks of the piston and connecting rod, and push in the piston pin with your thumb.

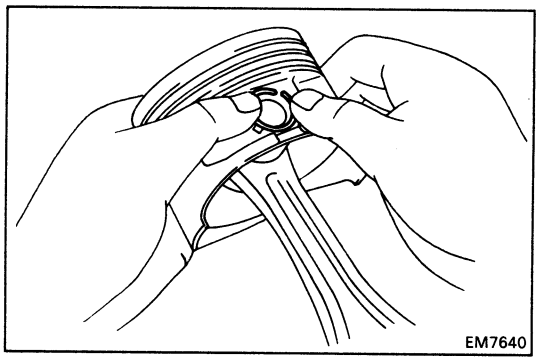

(e) Install a new snap ring on the other side of the piston pin hole.

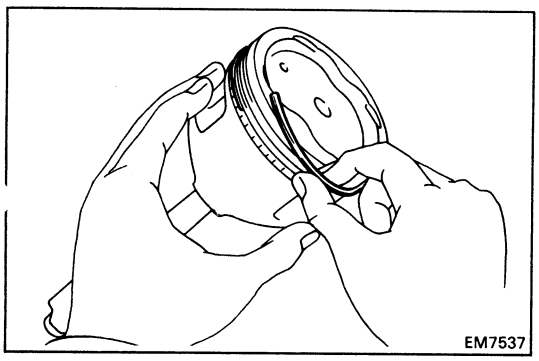

2. INSTALL PISTON RINGS

(a) Install the oil ring expander and two side rails by hand.

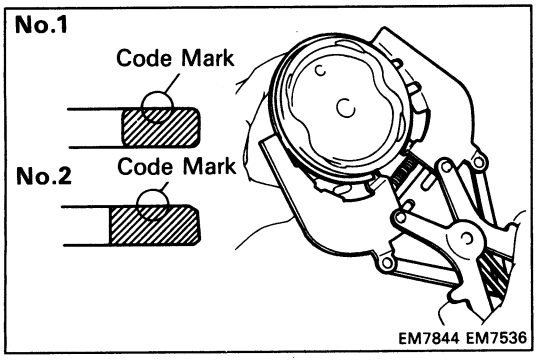

(b) Using a piston ring expander, install the two compression rings with the code mark facing upward.

Code mark: No.1 1N or T
No.2 2N or 2T

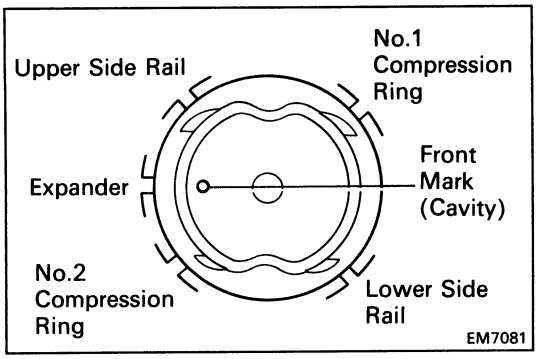

(c) Position the piston rings so that the ring ends are as shown.

NOTICE: Do not align the ring ends.

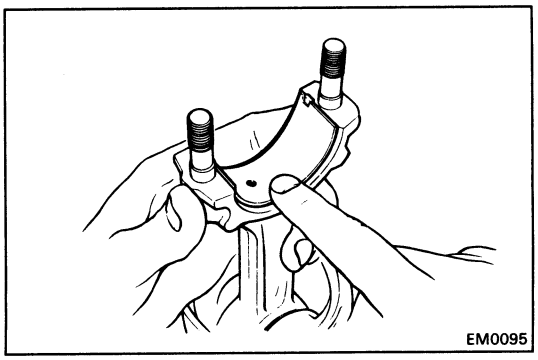

3. INSTALL BEARINGS

(a) Align the bearing claw with the groove of the connecting rod or connecting cap.

(b) Install the bearings in the connecting rod and connecting rod cap.

ASSEMBLY OF CYLINDER BLOCK

(See page EM-181)

HINT:

- Thoroughly clean all parts to be assembled.
- Before installing the parts, apply new engine oil to all sliding and rotating surfaces.
- Replace all gaskets, O-rings and oil seals with new parts.

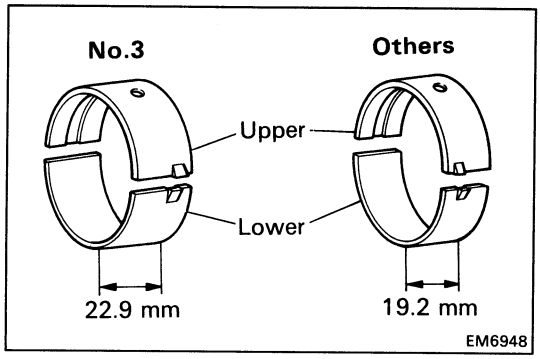

1. INSTALL MAIN BEARINGS

HINT:

- Main bearings come in widths of 19.2 mm (0.756 in.) and 22.9 mm (0.902 in.). Install the 22.9 mm (0.902 in.) bearings in the No.3 cylinder block journal position with the main bearing cap. Install the 19.2 mm (0.756 in.) bearings in the other positions.
- Upper bearings have an oil groove and oil holes; lower bearings do not.

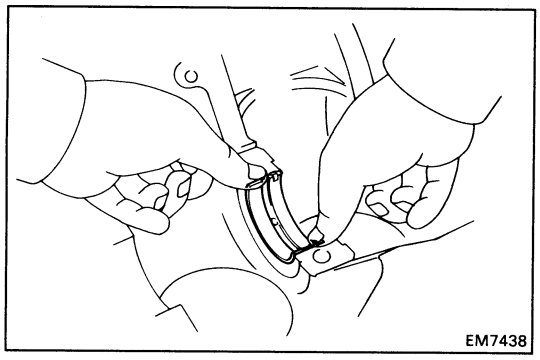

(a) Align the bearing claw with the claw groove of the cylinder block, and push in the five upper bearings.

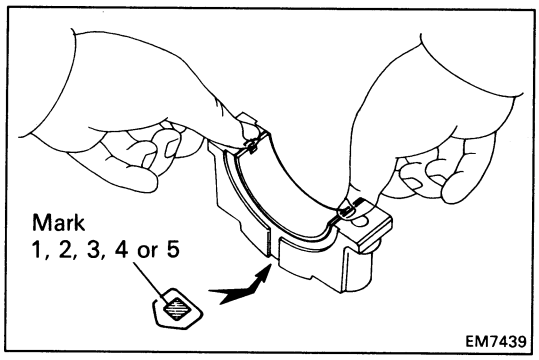

(b) Align the bearing claw with the claw groove of the main bearing cap, and push in the five lower bearings.

HINT: A number is marked on each main bearing cap to indicate the installation position.

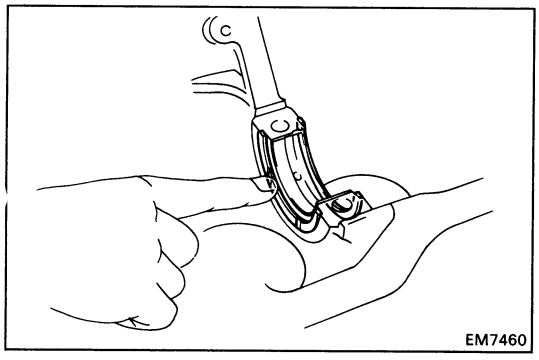

2. INSTALL UPPER THRUST WASHERS

Install the two thrust washers under the No.3 journal position of the cylinder block with the oil grooves facing outward.

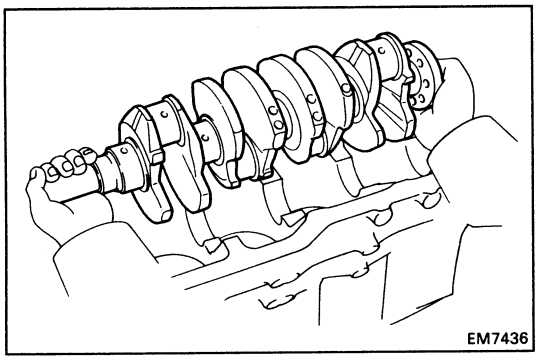

3. PLACE CRANKSHAFT ON CYLINDER BLOCK

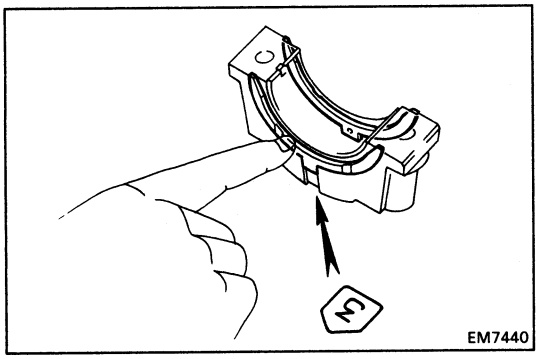

4. INSTALL MAIN BEARING CAPS AND LOWER THRUST WASHERS

(a) Install the two thrust washers on the No.3 bearing cap with the grooves facing outward.

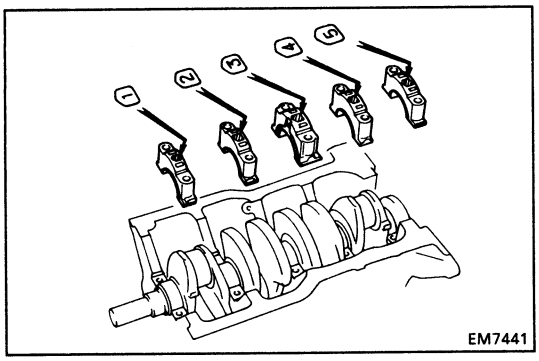

(b) Install the five main bearing caps in their proper locations.

HINT: Each bearing cap has a number and front mark.

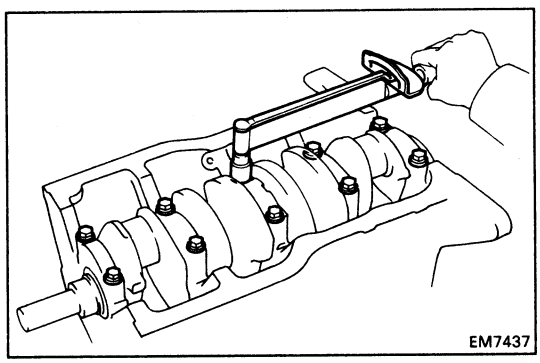

(c) Apply a light coat of engine oil on the threads and under the heads of the main bearing caps.

(d) Install and uniformly tighten the ten bolts of the main bearing caps in several passes in the sequence shown.

Torque: 600 kg-cm (43 ft-lb, 59 N·m)

(e) Check that the crankshaft turns smoothly.

(f) Check the crankshaft thrust clearance.
(See step 5 on page EM-195)

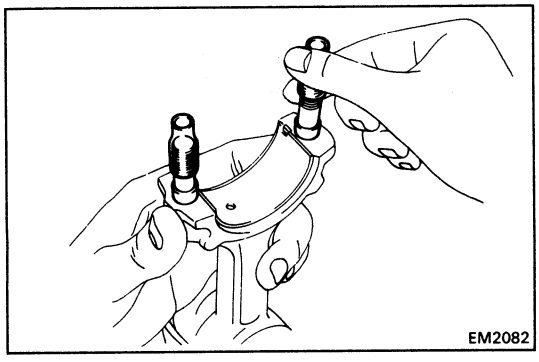

5. INSTALL PISTON AND CONNECTING ROD ASSEMBLIES

(a) Cover the connecting rod bolts with a short piece of hose to protect the crankshaft from damage.

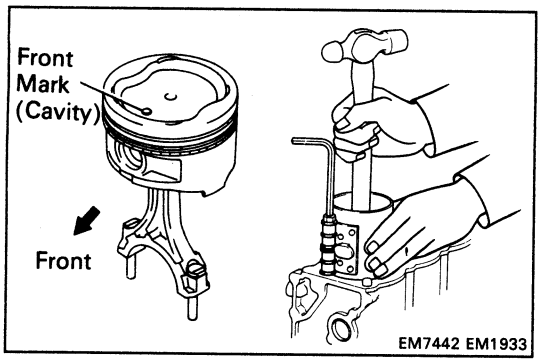

(b) Using a piston ring compressor, push the correctly numbered piston and connecting rod assemblies into each cylinder with the front mark of the piston facing forward.

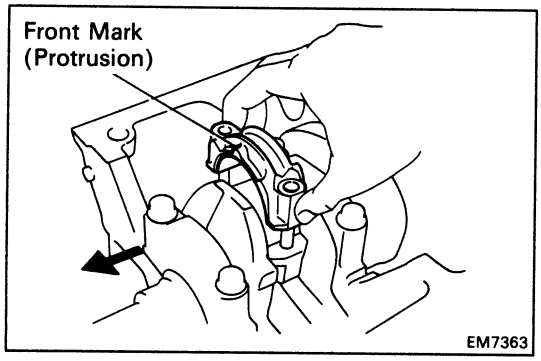

6. INSTALL CONNECTING ROD CAPS

A. Place connecting rod cap on connecting rod

(a) Match the numbered connecting rod cap with the connecting rod.

(b) Install the connecting rod cap with the front mark facing forward.

B. Install connecting rod cap nuts

HINT:

- The cap nuts are tightened in two progressive steps (steps (b) and (d)).
- If any the connecting rod bolt is broken or deformed, replace it.

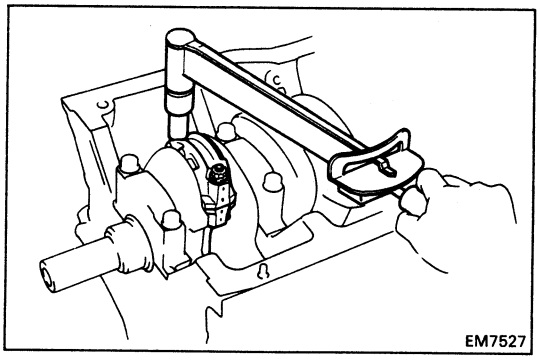

(a) Apply a light coat of engine oil on the threads and under the cap nuts.

(b) Using SST, install and alternately tighten the cap nuts in several passes.

SST 09011-38121

Torque: 250 kg-cm (18 ft-lb, 25 N·m)

If any one of the cap nuts does not meet the torque specification, replace the connecting rod bolt and cap nut as a set.

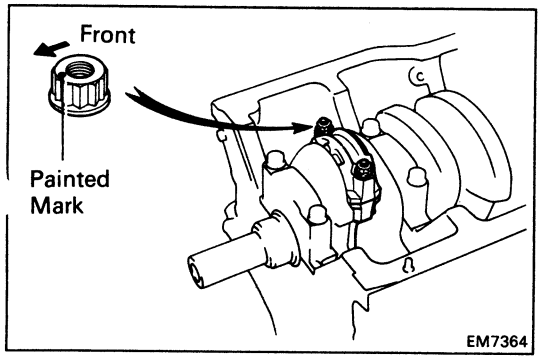

(c) Mark the front of the cap nut with the paint.

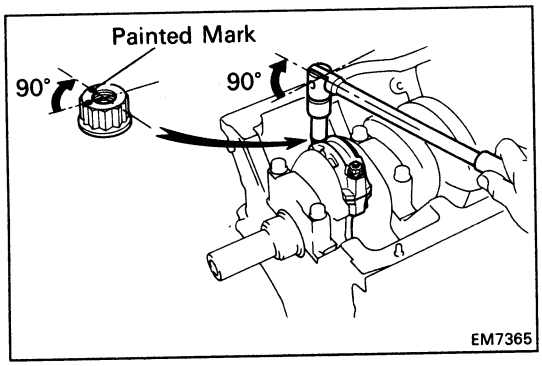

(d) Retighten the cap nuts 90° in the numerical order shown.

(e) Check that the painted mark is now at a 90° angle to the front.

(f) Check that the crankshaft turns smoothly.

(g) Check the connecting rod thrust clearance. (See step 2 on page EM-193)

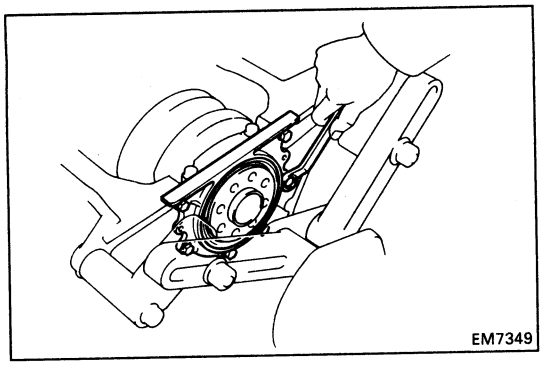

7. **INSTALL REAR OIL SEAL RETAINER**
Install a new gasket and the retainer with the six bolts.
Torque: 95 kg-cm (82 in.-lb, 9.3 N·m)

POST ASSEMBLY

1. **INSTALL OIL COOLER (See page LU-25)**
2. **INSTALL OIL FILTER (See page LU-7)**
3. **INSTALL OIL PUMP AND OIL PAN (See pages LU-15 and 16)**
4. **INSTALL WATER PUMP (See pages CO-12 and 13)**
5. **INSTALL CYLINDER HEAD (See pages EM-121 to 131)**
6. **INSTALL PULLEYS AND TIMING BELT (See pages EM-55 to 59)**

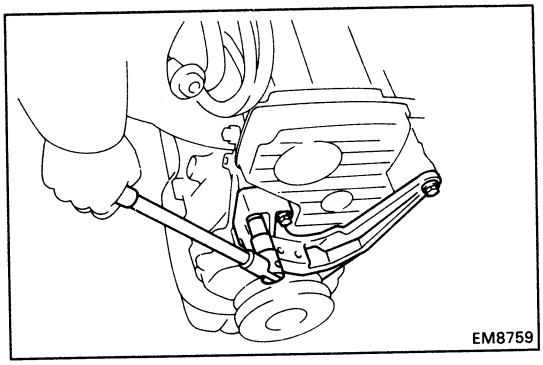

7. **INSTALL RH ENGINE MOUNTING BRACKET**
Install the mounting bracket with the four bolts.
Torque: 620 kg-cm (45 ft-lb, 61 N·m)

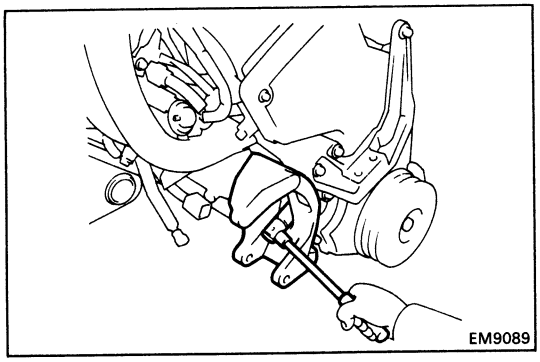

8. **INSTALL ALTERNATOR BRACKET**
Install the alternator bracket with the five bolts.
Torque: 440 kg-cm (32 ft-lb, 43 N·m)
9. **INSTALL ALTERNATOR (See page CH-17)**
10. **REMOVE ENGINE STAND**

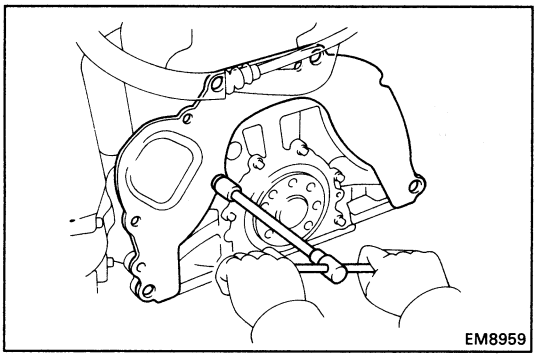

11. **INSTALL REAR END PLATE**

Torque: 95 kg-cm (82 ft-lb, 9.3 N·m)

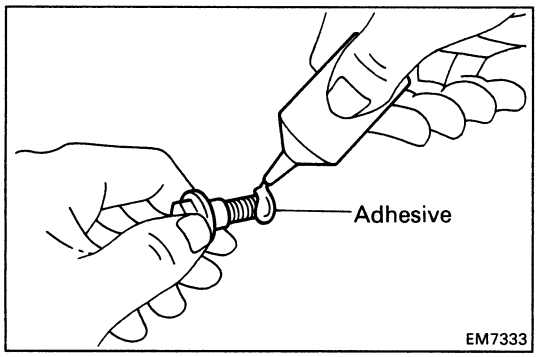

12. **(M/T)**
INSTALL FLYWHEEL

(a) Apply adhesive to two or three threads of the mount bolt end.

Adhesive: Part No. 08833-00070, THREE BOND 1324 or equivalent

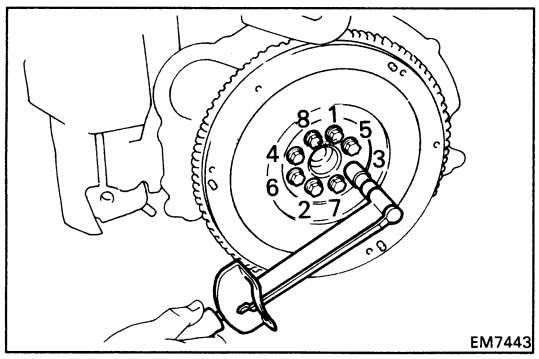

(b) Install the flywheel on the crankshaft.

(c) Install and uniformly tighten the mount bolts in several passes in the sequence shown.

Torque: 900 kg-cm (65 ft-lb, 88 N·m)

13. **(A/T)**
INSTALL DRIVE PLATE (See procedure step 12)

Torque: 850 kg-cm (61 ft-lb, 83 N·m)

14. **(M/T)**
INSTALL CLUTCH DISC AND COVER (See page CL-10)

INSTALLATION OF ENGINE

1. **ASSEMBLE ENGINE AND TRANSAXLE**
   M/T (See pages MT-5 and 6)
   A/T (See page AT-41)

2. **INSTALL STARTER (See page ST-17)**

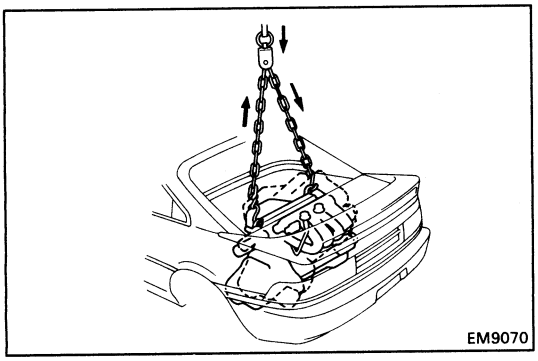

3. **INSTALL ENGINE AND TRANSAXLE ASSEMBLY IN VEHICLE**
   (a) Attach the engine chain hoist to the engine hangers.
   (b) Slowly lower the engine into the engine compartment.
   Tilt the transaxle downward, lower the engine and clear the LH body mounting.

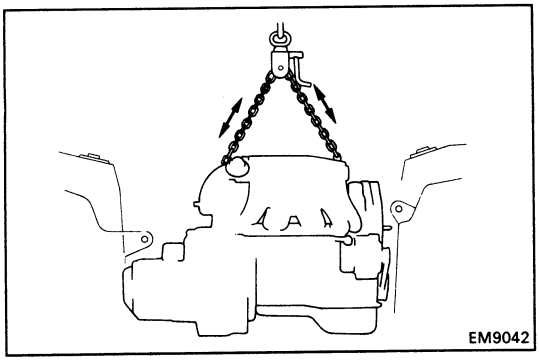

(c) Keep the engine level, and align RH and LH mountings with the body mountings.

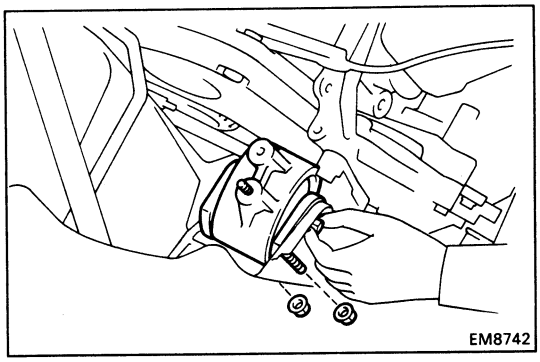

(d) Attach the RH mounting insulator to the body, and temporarily install the through bolt.
(e) Attach the RH mounting insulator to the mounting bracket, and temporarily install the two nuts.

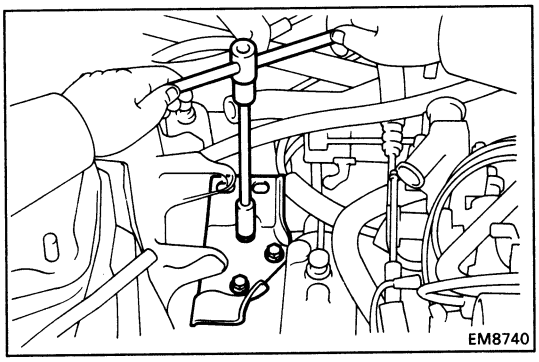

(f) (M/T)
Install the LH mounting bracket to the transaxle case with the three bolts.

Torque: 530 kg-cm (38 ft-lb, 52 N·m)

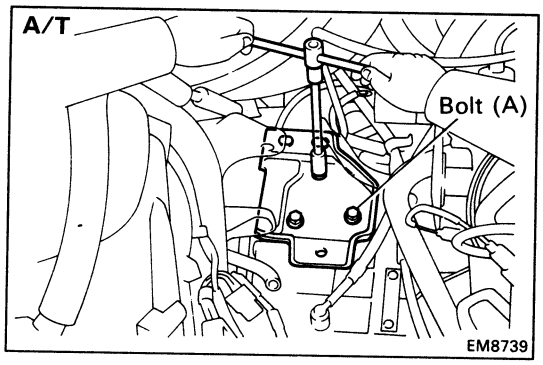

(g) (A/T)
Install the LH mounting bracket to the transaxle case with the three bolts. Do not tighten the bolt (A).

Torque: 530 kg-cm (38 ft-lb, 52 N·m)

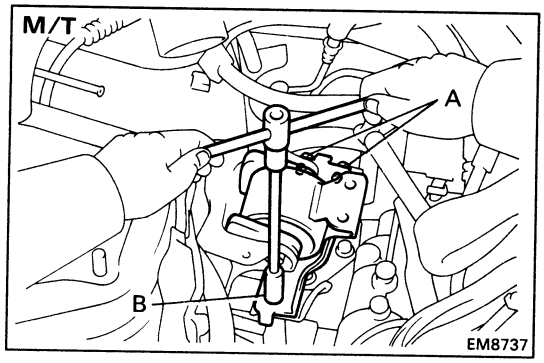

(h) Attach the LH mounting insulator to the body, and temporarily install the through bolt.

(i) Attach the LH mounting insulator to the mounting bracket, and install the three (M/T) or four (A/T) bolts.

Torque:
A 650 kg-cm (47 ft-lb, 63 N·m)
B 740 kg-cm (54 ft-lb, 73 N·m)
C 530 kg-cm (38 ft-lb, 52 N·m) A/T only

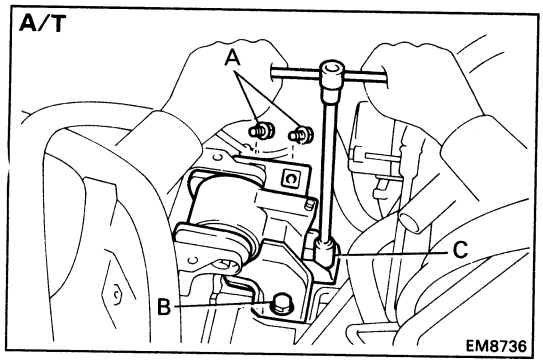

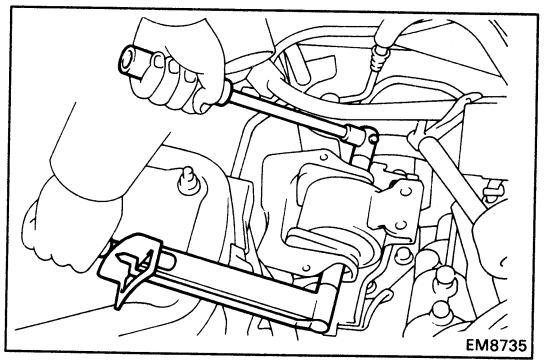

(j) Tighten the through bolt holding the LH mounting insulator to the body.

Torque: 800 kg-cm (58 ft-lb, 78 N·m)

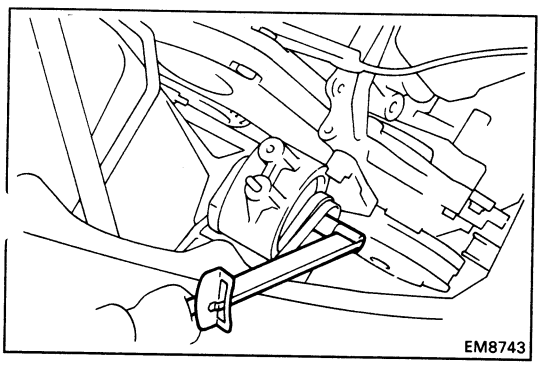

(k) Tighten the two nuts holding the RH mounting insulator to the mounting bracket.

Torque: 530 kg-cm (38 ft-lb, 52 N·m)

(l) Tighten the through bolt holding the RH mounting insulator to the body.

Torque: 800 kg-cm (58 ft-lb, 78 N·m)

(m) Remove the engine chain hoist from the engine.

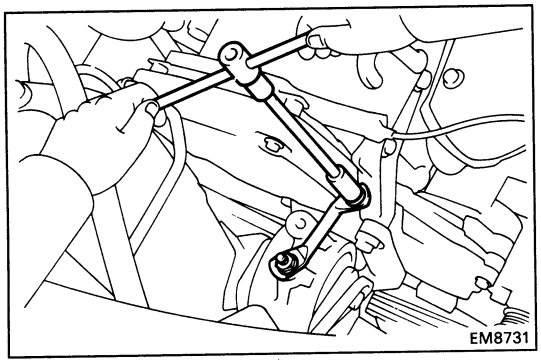

4. **INSTALL RH ENGINE MOUNTING STAY**

Install the mounting stay with the two bolts and nut.

Torque: 740 kg-cm (54 ft-lb, 73 N·m)

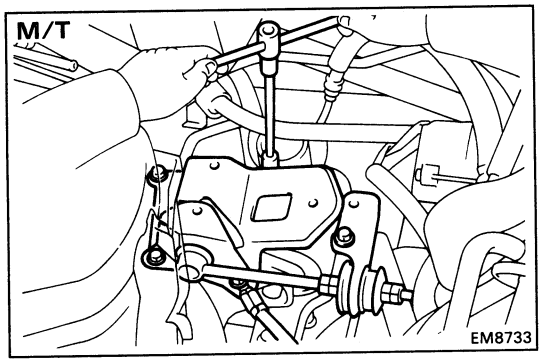

5. **INSTALL LATERAL CONTROL ROD (M/T) AND AIR CLEANER CASE BRACKET**

(M/T)

Install the control rod, case bracket and charcoal canister tube with the five bolts, and connect the ground strap (from transaxle). Do not the tighten the bolt (A).

Torque: 360 kg-cm (26 ft-lb, 35 N·m)

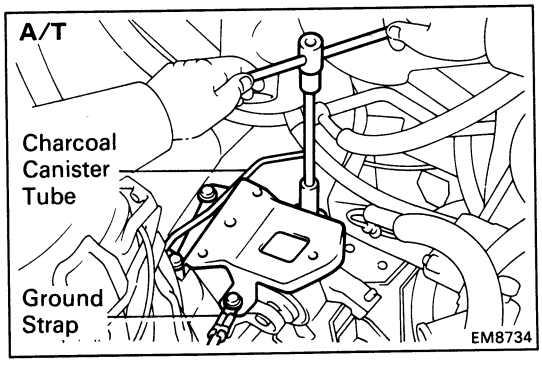

(A/T)

Install the case bracket and charcoal canister tube with the four bolts, and connect the ground strap (from transaxle). Do not the tighten the bolt (A).

Torque: 360 kg-cm (26 ft-lb, 35 N·m)

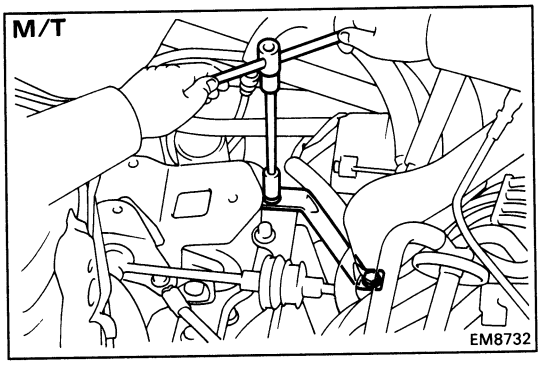

6. **(M/T)**
INSTALL LH ENGINE MOUNTING STAY

(a) Install the mounting stay and speedometer cable clamp with the two bolts.

Torque:
Transaxle side 250 kg-cm (18 ft-lb, 25 N·m)
Mounting insulator side 740 kg-cm (54 ft-lb, 73 N·m)

(b) Tighten the bolt (A) of step 6.

Torque: 380 kg-cm (27 ft-lb, 37 N·m)

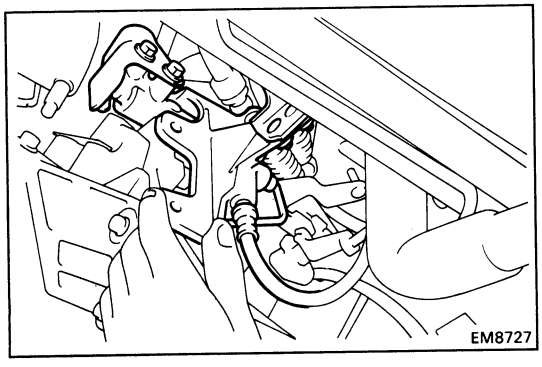

7. **INSTALL CLUTCH RELEASE CYLINDER (M/T), TRANSAXLE CONTROL BRACKET (A/T) AND FRONT ENGINE MOUNTING BRACKET**

(a) (M/T)
Place the release cylinder on the transaxle.

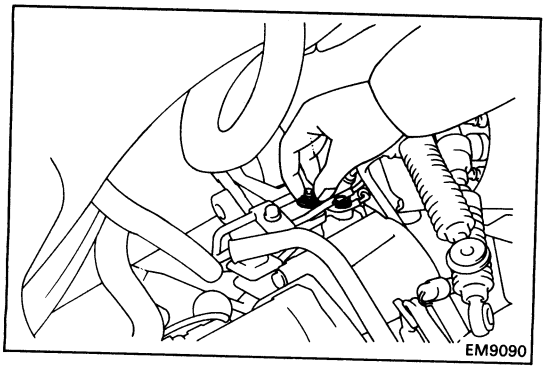

(b) (M/T)
Temporarily install the bolt and nut holding the release cylinder to the transaxle.

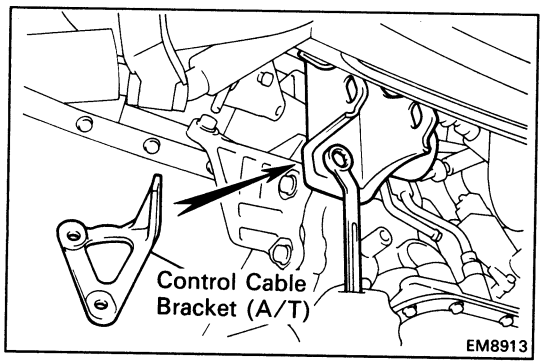

(c) Install the control cable bracket (A/T) and mounting bracket with the two bolts.

Torque: 790 kg-cm (57 ft-lb, 77 N·m)

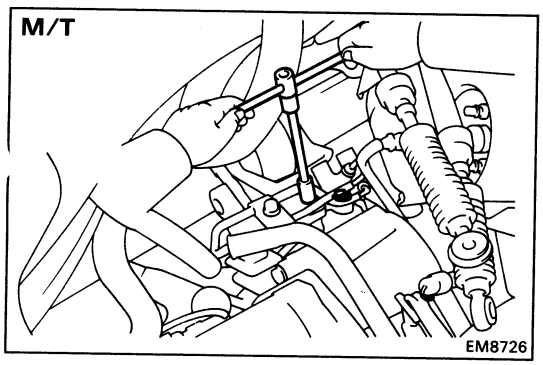

(d) (M/T)
Tighten the bolt and nut holding the clutch release cylinder to the tranaxle.

Torque: 120 kg-cm (9 ft-lb, 12 N·m)

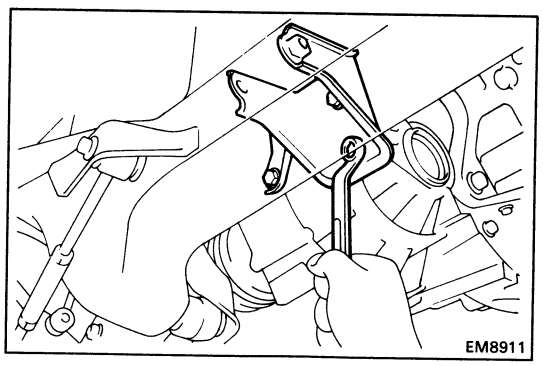

8. INSTALL REAR ENGINE MOUNTING BRACKET

Install the mounting bracket with the three bolts.

Torque: 790 kg-cm (57 ft-lb, 77 N·m)

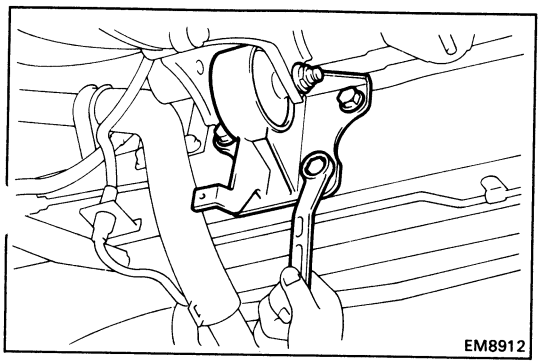

9. INSTALL FRONT ENGINE MOUNTING INSULATOR

(a) Install the mounting insulator to the body with the four bolts.

Torque: 740 kg-cm (54 ft-lb, 73 N·m)

(b) Temporarily install the through bolt and nut holding the mounting insulator to the mounting bracket.

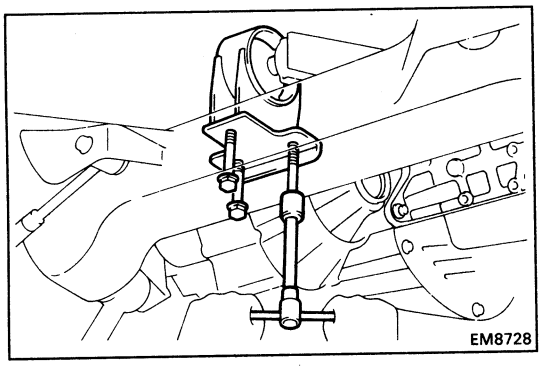

10. INSTALL REAR ENGINE MOUNTING INSULATOR

(a) Temporarily install the mounting bracket to the body with the three bolts.

(b) Temporarily install the through bolt holding the mounting insulator to the mounting bracket.

(c) Tighten the three bolts holding the mounting bracket to the body.

Torque: 650 kg-cm (47 ft-lb, 64 N·m)

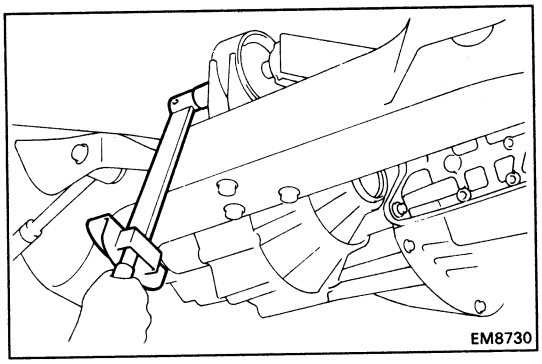

(d) Tighten the through bolt holding the mounting insulator to the mounting bracket.

Torque: 800 kg-cm (58 ft-lb, 79 N·m)

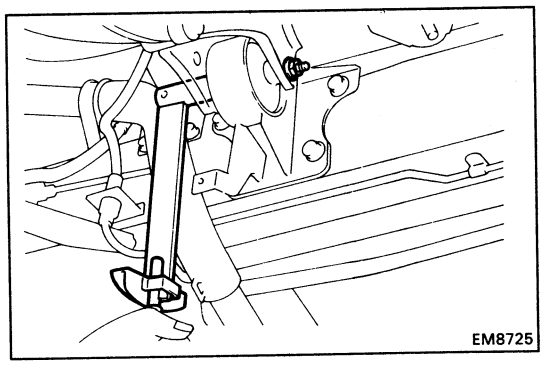

11. TIGHTEN FRONT ENGINE MOUNTING THROUGH BOLT

Torque: 800 kg-cm (58 ft-lb, 79 N·m)

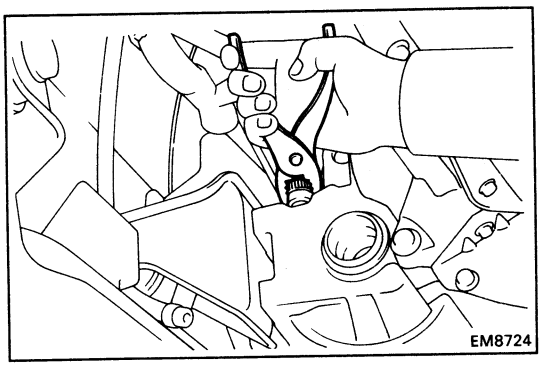

12. CONNECT SPEEDOMETER CABLE

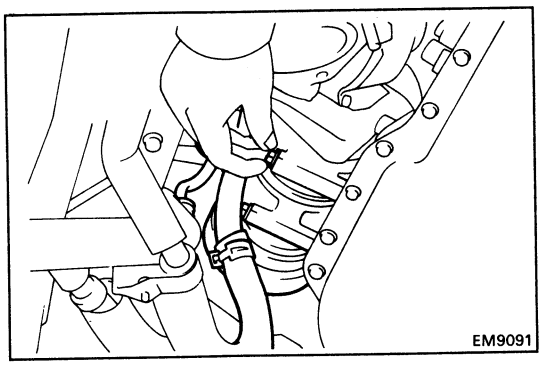

13. INSTALL A/C COMPRESSOR AND IDLER PULLEY BRACKET

(a) Temporarily install the compressor with the two bolts.

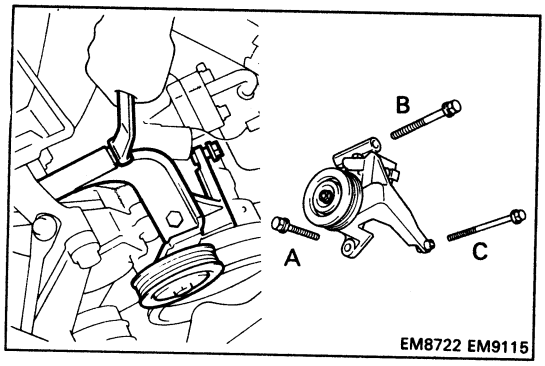

(b) Install the idler pulley and bracket with the three bolts.

Torque:

A 275 kg-cm (20 ft-lb, 27 N·m)
B 375 kg-cm (27 ft-lb, 37 N·m)
C 250 kg-cm (18 ft-lb, 25 N·m)

(c) Install the wire clamp of the A/C compressor with the bolt.

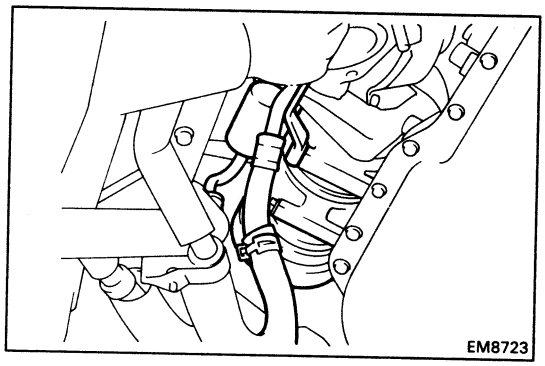

(d) Tighten the two bolts of the lower side holding the A/C compressor to the cylinder block.

Torque: 280 kg-cm (20 ft-lb, 27 N·m)

(e) Connect the A/C compressor connector.

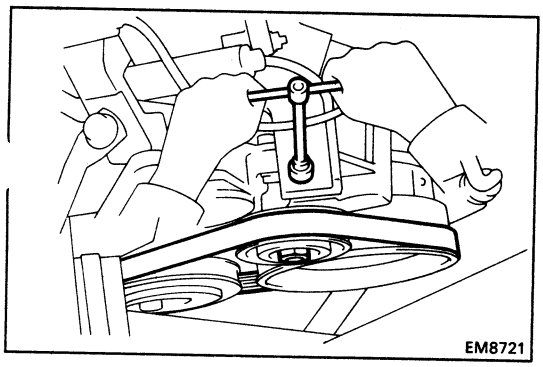

(f) Install the drive belt with the idler pulley bolt and adjusting bolt.

14. INSTALL DRIVE SHAFTS (See pages SA-49 to 51)

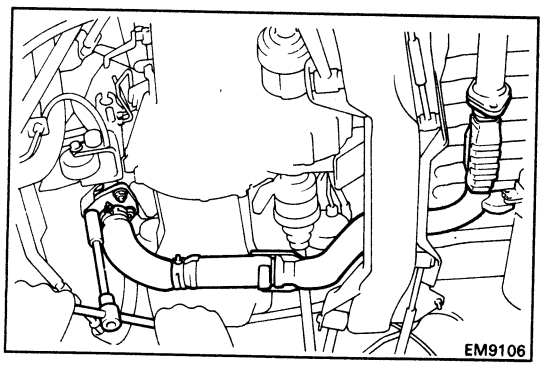

15. INSTALL FRONT EXHAUST PIPE

(a) Place a new gasket on the front of the front exhaust pipe.

(b) Using a 14 mm deep socket wrench, install the three new nuts holding the exhaust pipe to the catalytic converter.

Torque: 630 kg-cm (46 ft-lb, 62 N·m)

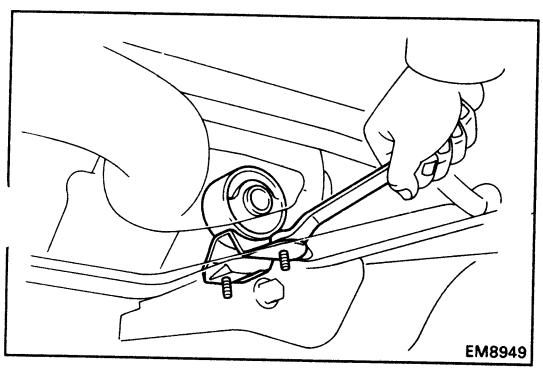

(c) Install the support bracket with the two bolts.

Torque: 210 kg-cm (15 ft-lb, 21 N·m)

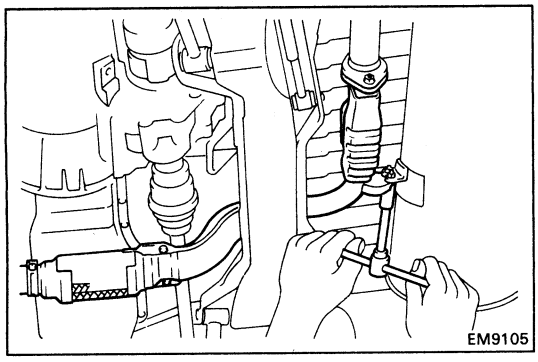

(d) Place a new gasket on the rear of the front exhaust pipe.

(e) Temporarily install the two bolts holding the front exhaust pipe to the tailpipe.

(f) Install the two bolts holding the stopper bracket of the front exhaust pipe to the tailpipe stopper bracket.

Torque: 190 kg-cm (190 ft-lb, 19 N·m)

(g) Tighten the two bolts holding the front exhaust pipe to the tailpipe.

Torque: 440 kg-cm (32 ft-lb, 43 N·m)

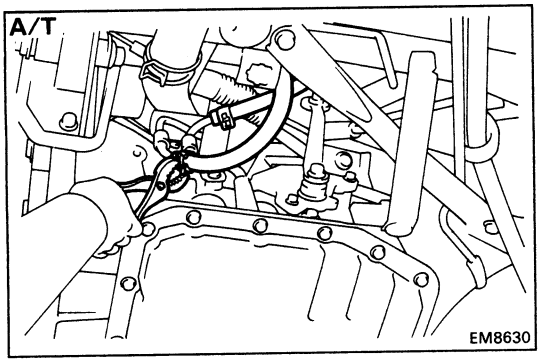

16. (A/T)
CONNECT TRANSAXLE OIL COOLER HOSES

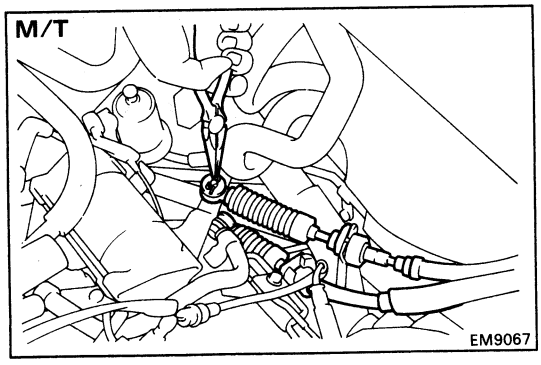

17. CONNECT TRANSAXLE CONTROL CABLE(S)

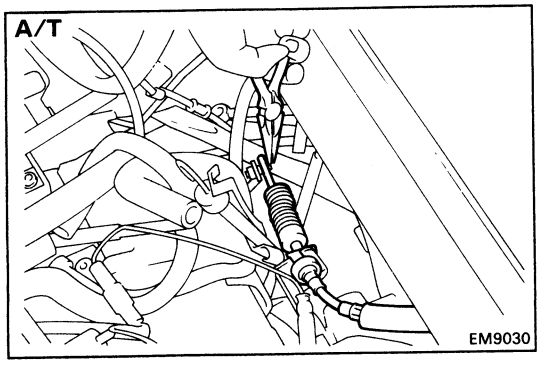

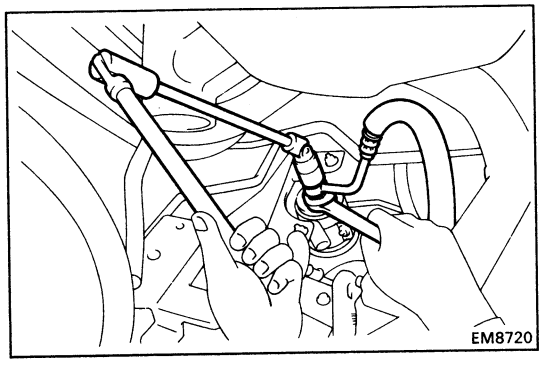

18. CONNECT FUEL INLET HOSE TO FUEL FILTER

Torque: 300 kg-cm (22 ft-lb, 29 N·m)

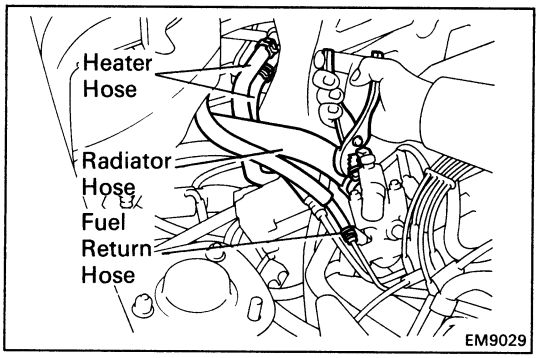

19. **CONNECT FUEL RETURN HOSE**

20. **CONNECT RADIATOR HOSE TO WATER OUTLET**

21. **CONNECT HEATER HOSES**

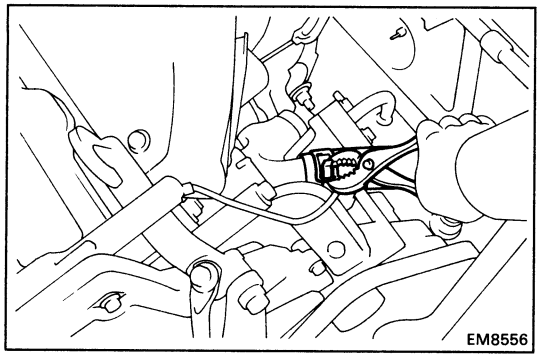

22. **CONNECT RADIATOR HOSE TO WATER INLET**

23. **CONNECT STARTER CABLE**

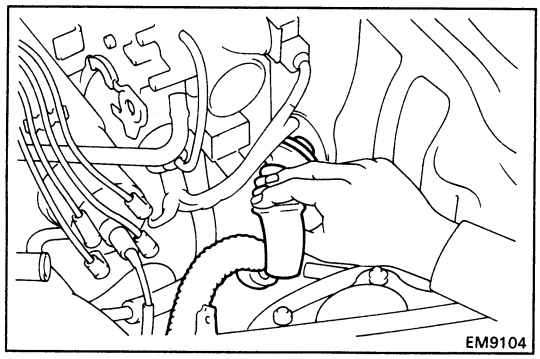

24. **CONNECT ENGINE WIRE TO LUGGAGE COMPARTMENT**
    (a) Push in the engine wire through the luggage compartment.
    (b) Connect the following connectors.
        (1) Two engine ECU connectors
        (2) Starter relay connector
        (3) Engine compartment wire connector

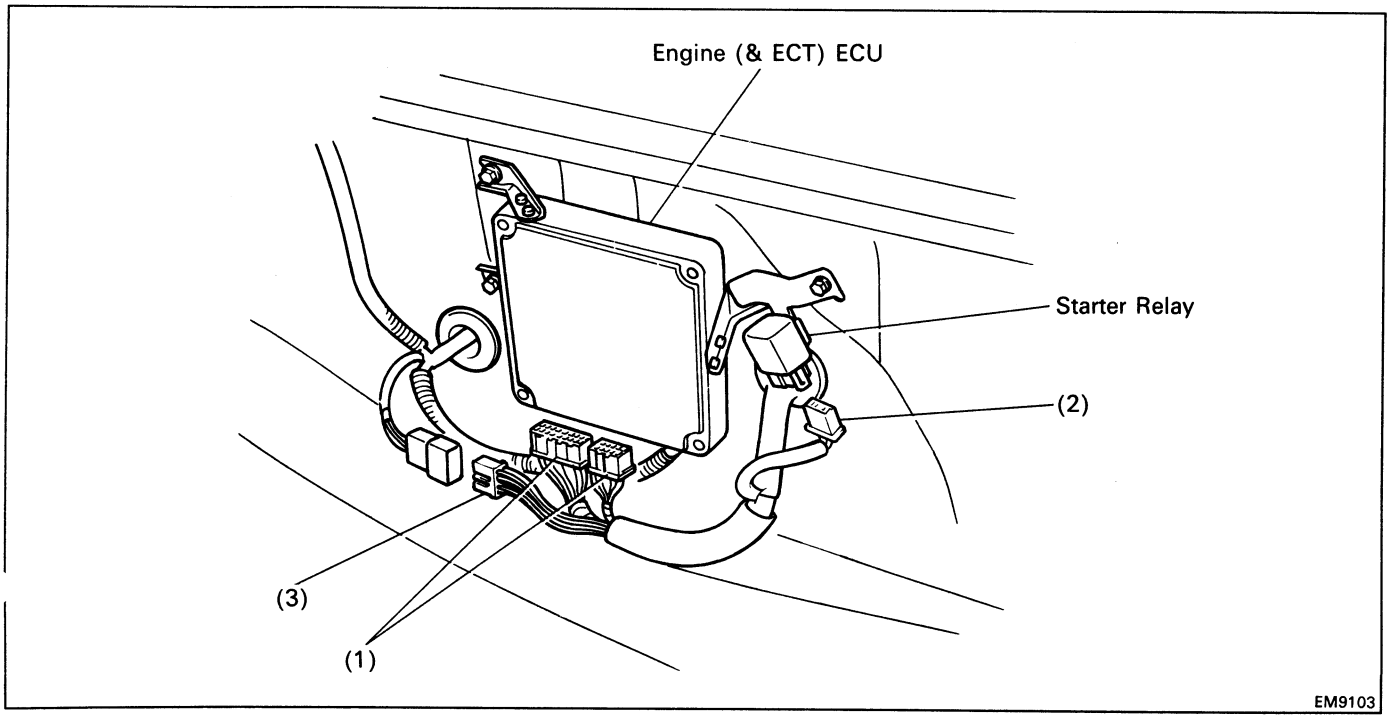

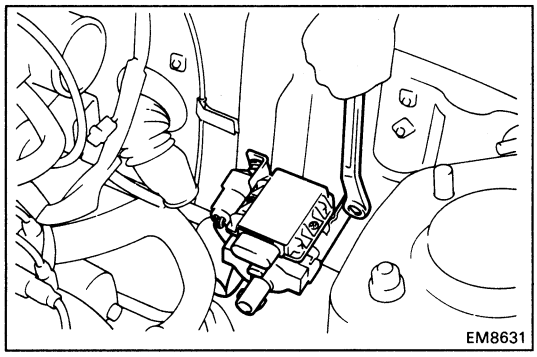

25. INSTALL IGNITION COIL AND IGNITER

(a) Install the ignition coil and igniter with the two bolts. Connect the noise filter.

(b) Connect the high-tension cord.

(c) Connect the igniter connector.

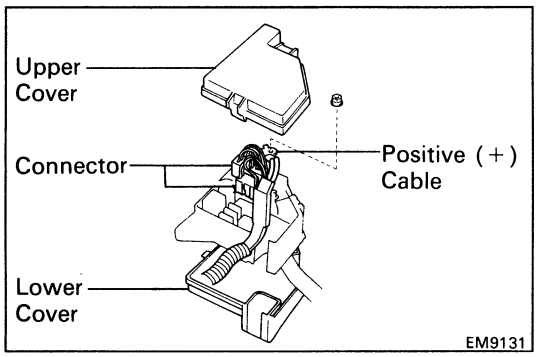

26. CONNECT ENGINE WIRE, AND INSTALL ENGINE RELAY BOX

(a) Connect the two connectors and positive (+) cable of the engine wire to the relay box.

(b) Install the upper and lower covers to the relay box.

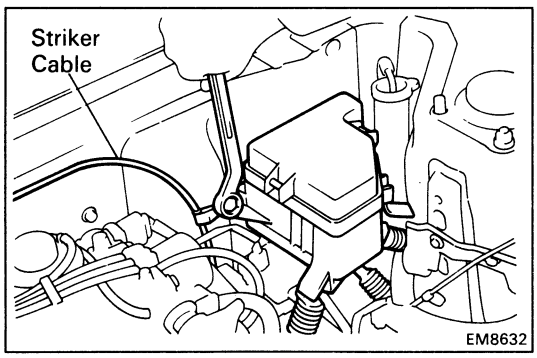

(c) Install the relay box with the two bolts. Install the luggage compartment striker cable.

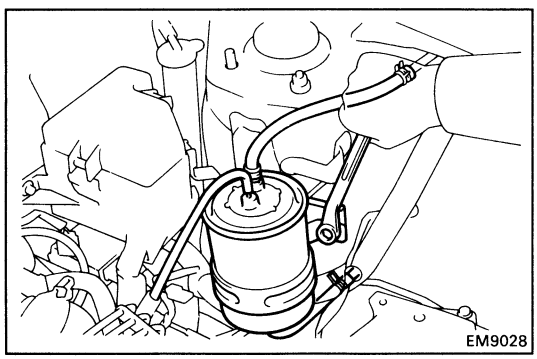

27. INSTALL CHARCOAL CANISTER

(a) Install the charcoal canister with the two bolts.

(b) Connect the three hoses.

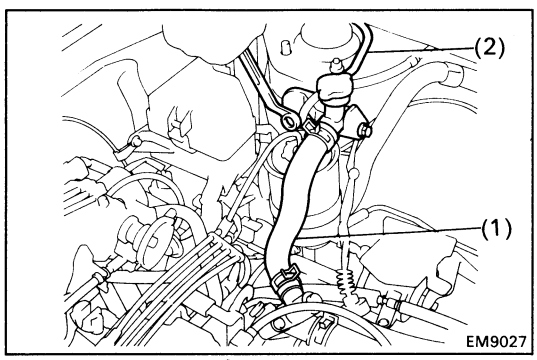

28. INSTALL WATER FILLER

(a) Install the water filler with the two bolts.

(b) Connect the following hoses:

(1) Water filler hose

(2) Coolant reservoir hose

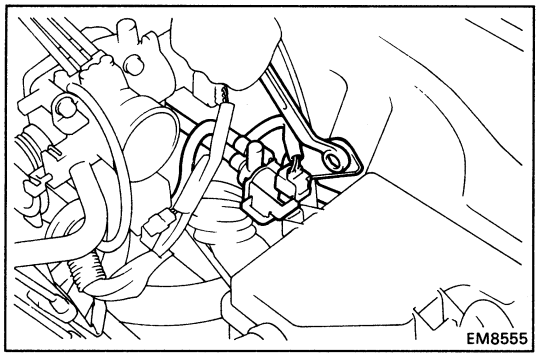

29. INSTALL A/C VSV

(a) Install the A/C VSV with the bolt.

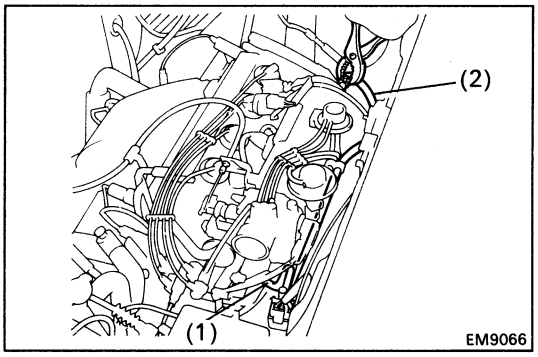

(b) Connect the following hoses:
  (1) Air hose from ISC valve
  (2) Vacuum hose from intake manifold

(c) Connect the VSV connector.

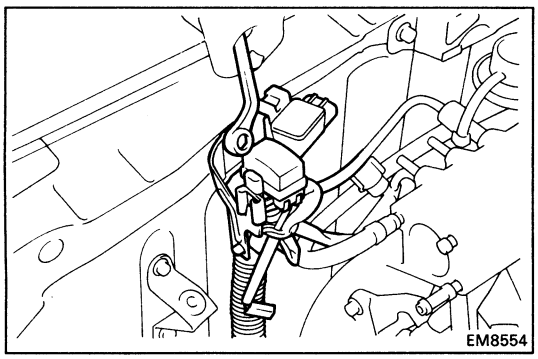

30. INSTALL CHECK CONNECTOR AND VACUUM SENSOR

Install the check connector and vacuum sensor with the bolt.

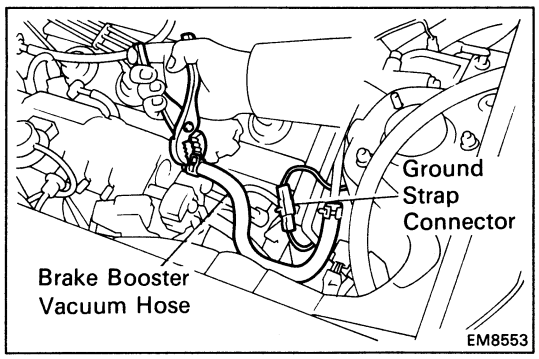

31. CONNECT BRAKE BOOSTER VACUUM HOSE

32. CONNECT GROUND STRAP CONNECTOR

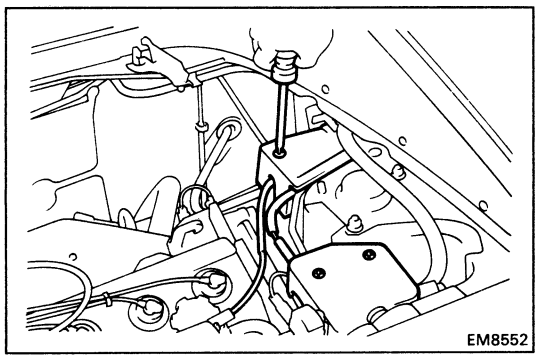

33. INSTALL CRUISE CONTROL ACTUATOR (w/ CRUISE CONTROL SYSTEM) AND ACCELERATOR LINKAGE

(a) Connect the cable to the accelerator linkage.

(b) Install the accelerator linkage with the three bolts.

(c) Connect the actuator connector.

(d) Install the actuator with the three bolts.

(e) Install the accelerator linkage cover with the screw.

(f) Install the actuator cover with the two screws.

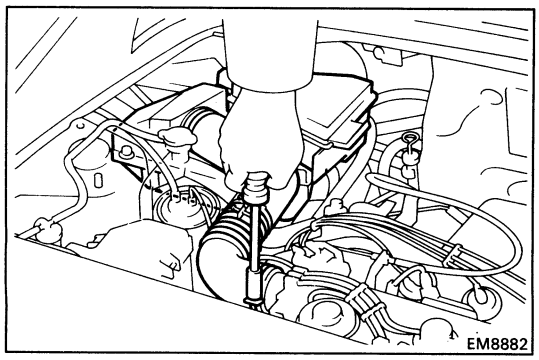

34. INSTALL ACCELERATOR CABLE, AND ADJUST IT

35. INSTALL AIR CLEANER ASSEMBLY

(a) Install the air cleaner case with the three bolts.

(b) Install the air cleaner element.

(c) Connect the air cleaner hose to the throttle body.

(d) Install the air cleaner cap.

(e) Connect the intake air temperature sensor connector.

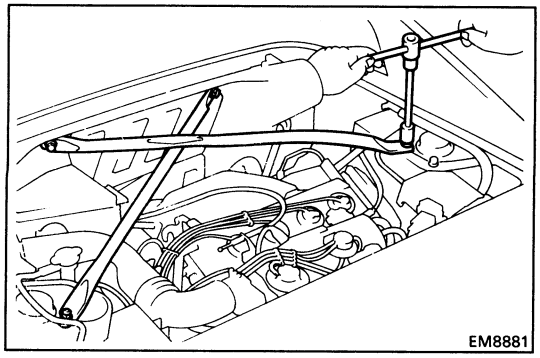

36. INSTALL SUSPENSION UPPER BRACE

Install the suspension upper brace with the two bolts and two nuts.

Torque: Bolt 740 kg-cm (54 ft-lb, 73 N·m)
Nut 650 kg-cm (47 ft-lb, 64 N·m)

37. CONNECT CABLE TO NEGATIVE TERMINAL OF BATTERY

38. FILL WITH ENGINE COOLANT (See page CO-7)

Capacity (w/ Heater):
13.0 liters (13.7 US qts, 11.4 Imp. qts)

39. FILL WITH ENGINE OIL (See page LU-8)

Capacity:
Drain and refill
w/ Oil filter change
4.2 liters (4.4 US qts, 3.7 Imp. qts)
w/o Oil filter change
3.8 liters (4.0 US qts, 3.3 Imp. qts)
Dry fill 4.6 liters (4.9 US qts, 4.0 Imp. qts)

40. START ENGINE AND CHECK FOR LEAKS

41. PERFORM ENGINE ADJUSTMENT

(a) Adjust the alternator drive belt.
(See page CH-3)

Drive belt tension: New belt 120 ± 20 lb
Used belt 104 ± 20 lb

(b) Adjust the A/C drive belt.

Drive belt tension: New belt 160 ± 20 lb
Used belt 100 ± 20 lb

(c) Adjust the ignition timing.
(See steps 9 to 13 on pages IG-21 and 22)

Ignition timing:
10° BTDC @ idle
(w/ Terminals TE1 and E1 connected)

42. **INSTALL ENGINE UNDER COVERS**

43. **INSTALL ENGINE HOOD**

44. **INSTALL ENGINE COMPARTMENT SIDE PANELS**

45. **PERFORM ROAD TEST**

    Check for abnormal noise, shock, slippage, correct shift points and smooth operation.

46. **RECHECK ENGINE COOLANT AND OIL LEVELS**

EXHAUST SYSTEM

Page

EXHAUST PIPES AND HEAT INSULATORS EX-2

EX

EXHAUST PIPES AND HEAT INSULATORS

COMPONENTS

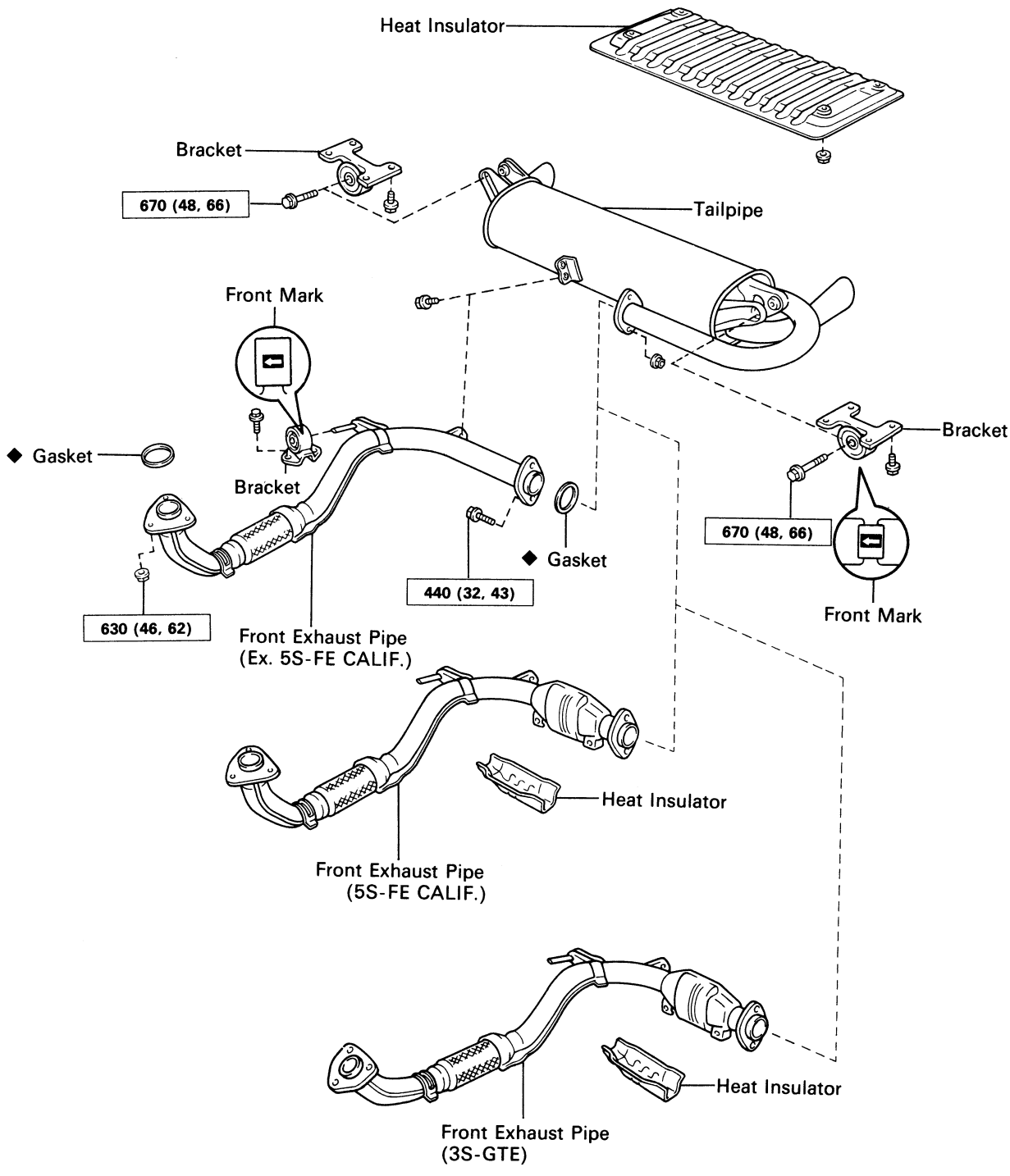

kg-cm (ft-lb, N·m) : Specified torque

◆ Non-reusable part

EX0028

TURBOCHARGER

	Page
DESCRIPTION	TC-2
PRECAUTIONS	TC-4
TROUBLESHOOTING	TC-5
TURBOCHARGER	TC-7
INTERCOOLER	TC-20

DISCRIPTION

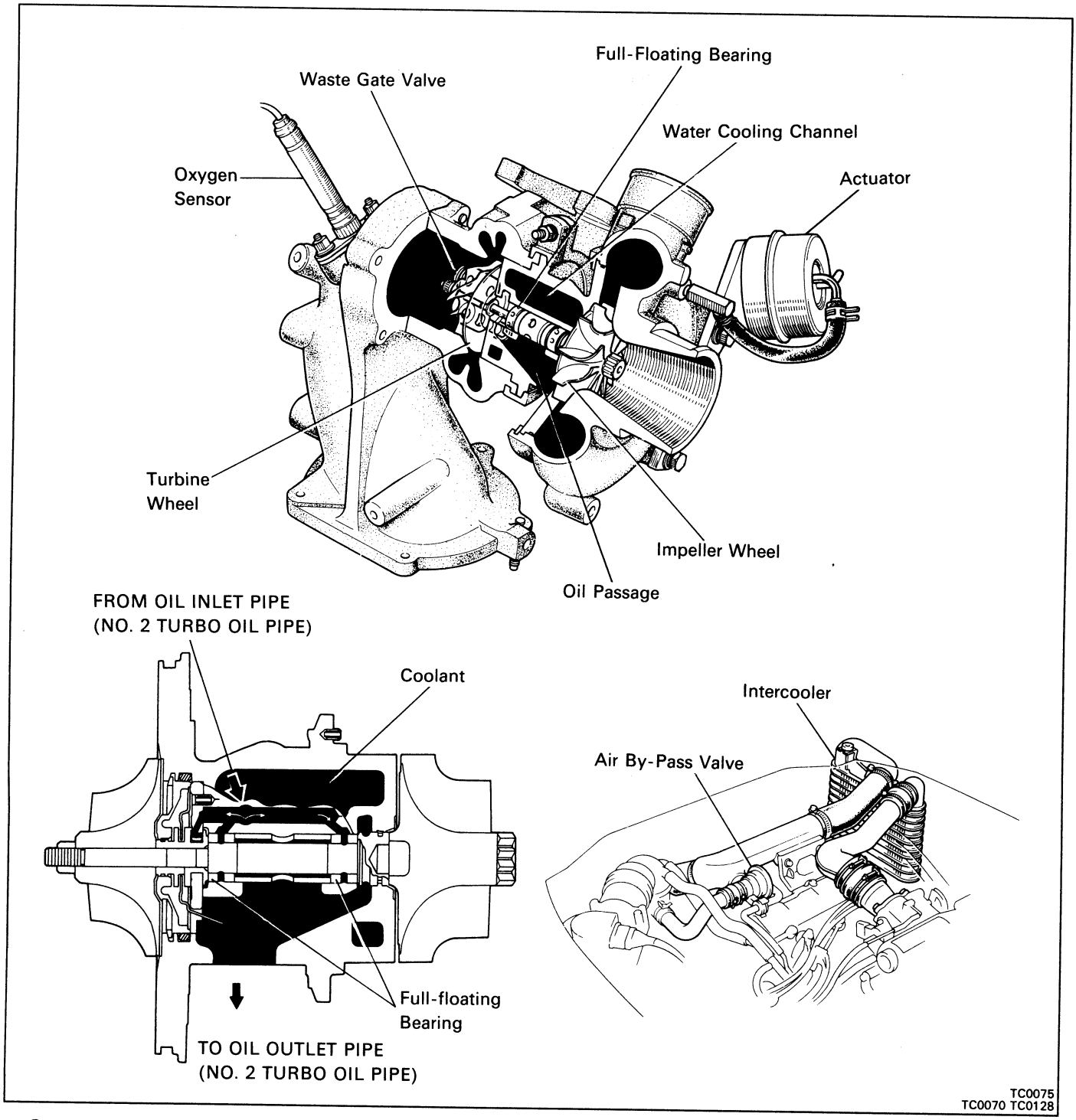

TC0075
TC0070 TC0128

Systems which increase the amount of air sent to the engine are either turbocharger type (using exhaust gas to turn the turbine) or supercharger type (using the engine crankshaft, etc. to mechanically turn the pump, etc.). For MR2 3S-GTE engine, the turbocharger type has been adopted.

The turbocharger is a device which increases engine output by sending a greater amount of air-fuel mixture to the engine than under normal conditions.

Engine output depends upon the volume of the air-fuel mixture ignited per unit of time. Therefore, to increase engine output, the most effective method is to send a greater amount of air-fuel mixture into the cylinder.

In other words, by installing a special turbocharger and providing a higher air-fuel mixture than usual, engine output can be increased by increasing the average combustion pressure without increasing the engine speed.

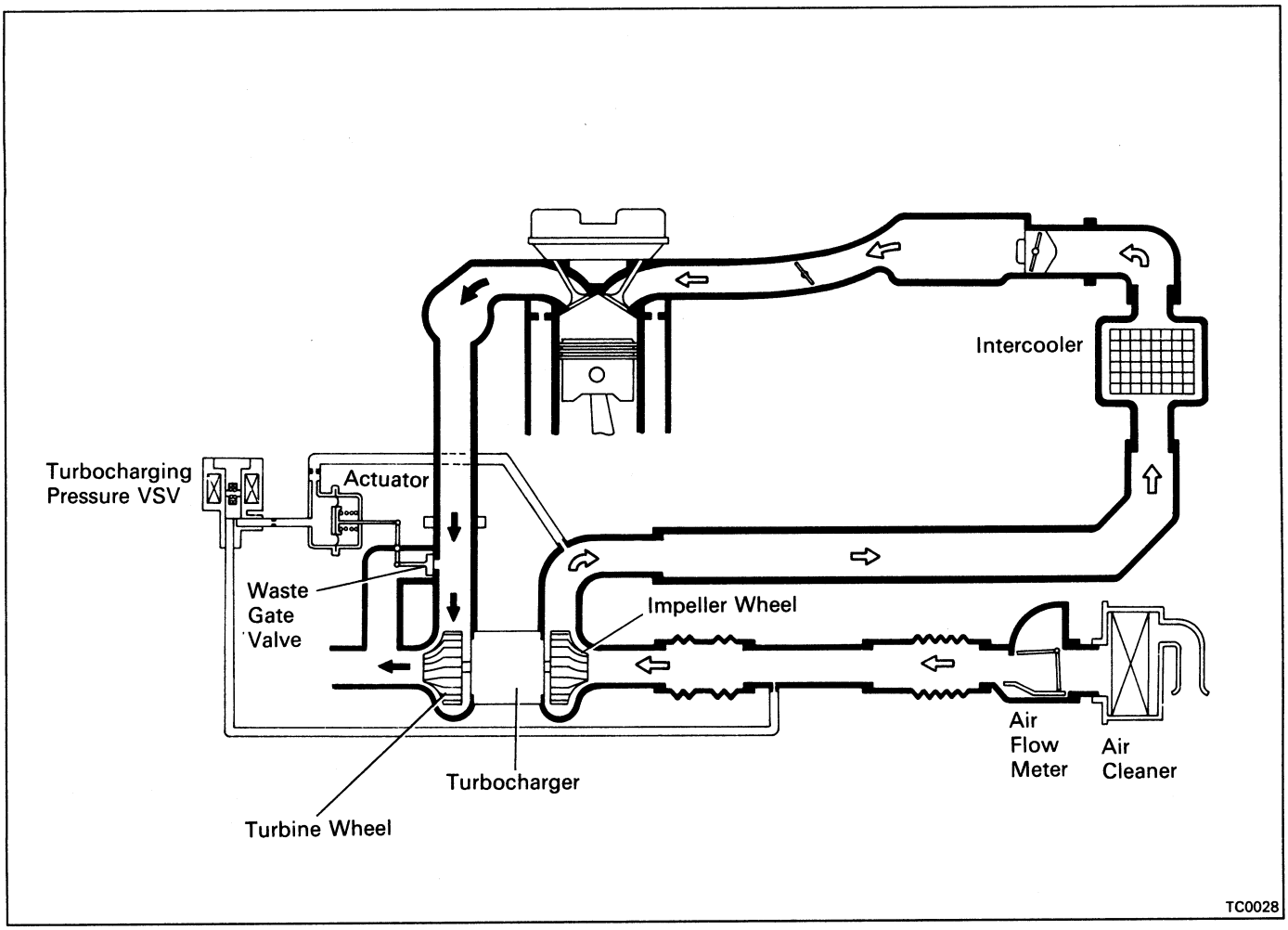

Operation of Turbocharger

Exhaust gas acts on the turbine wheel inside the turbine housing, causing it to revolve. When the turbine wheel revolves, the impeller which is located on the same shaft also revolves, compressing the intake air which has passed through the air flow meter from the air cleaner. When expelled from the compressor housing the compressed air is supplied to the cylinders. When the engine speed increases, the exhaust gas volume increases and the turbine wheel revolutions increase (approx. 20,000 – 110,000 rpm), thus the turbocharged air pressure grows greater and engine output increases.

Waste Gate Valve

Although on the one hand high output is achieved by turbo-charging, if the turbocharged air pressure becomes too high, knocking occurs and, on the contrary, a reduction in engine output is caused. If the turbocharged air pressure exceeds the prescribed air pressure, the flow of exhaust gas by-passes the turbine, controlling turbine wheel revolutions and turbocharged air pressure. This by-pass valve which controls the quantity of exhaust gas flowing to the turbine is called the waste gate valve. When the turbocharged air pressure exceeds the prescribed pressure, the actuator operates, the waste gate valve opens and part of the exhaust gas by-passes the turbine. This causes a drop in the turbine revolution rate and controls the turbocharged air within the prescribed limits.

Intercooler

The intercooler cools the turbocharged air (intake air) put out by the turbocharger, thereby increasing the air density. As the intake air temperature decreases, the gas temperature in the combustion chamber falls and the occurrence of knocking is suppressed, giving an increase in engine output.

The Celica MR2 intercooler is an air cooling type located at the top of the engine, utilizing the vehicle windstream to cool the turbocharged air.

PRECAUTIONS

1. Do not stop the engine immediately after pulling a trailer or high speed or uphill driving. Idle the engine for 20 – 120 seconds, depending on the severity of the driving condition.
2. Avoid sudden racing or acceleration immediately after starting a cold engine.
3. If the engine is run with the air cleaner removed, foreign material entering will damage the wheels which run at extremely high speed.
4. If the turbocharger is defective and must be replaced, first check for the cause of the defect in reference to the following items and replace parts if necessary:
   - Engine oil level and quality
   - Conditions under which the turbocharger was used
   - Oil lines leading to the turbocharger

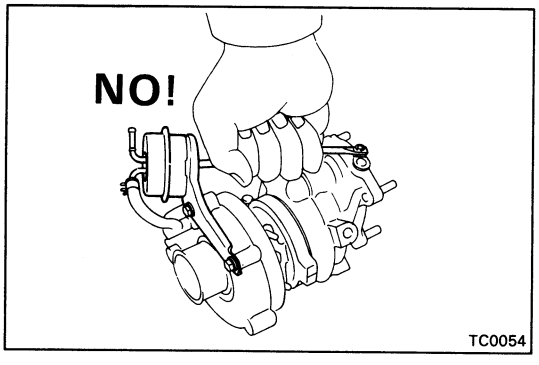

TC0054

5. Use caution when removing and reinstalling the turbocharger assembly. Do not drop it or bang it against anything or grasp it by easily-deformed parts, such as the actuator or rod, when moving it.
6. Before removing the turbocharger, plug the intake and exhaust ports and oil inlet to prevent entry of dirt or other foreign material.

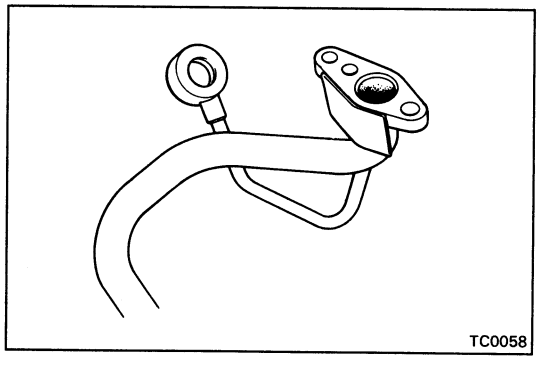
TC0058

7. If replacing the turbocharger, check for accumulation of sludge particles in the oil pipes, and if necessary, replace the oil pipes.
8. Completely remove the gasket adhered to the lubrication oil pipe flange and turbocharger oil flange.
9. If replacing bolts or nuts, do so only with the specified new ones to guard against breakage or deformation.

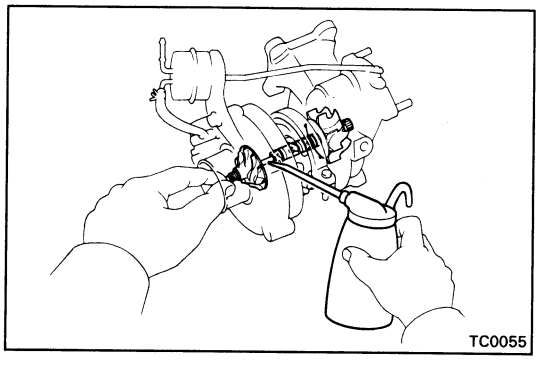
TC0055

10. If replacing the turbocharger, put 20 cc (1.2 cu in.) of oil into the turbocharger oil inlet and turn the impeller wheel by hand to spread oil to the bearing.
11. If overhauling or replacing the engine, cut the fuel supply after reassembly and crank the engine for 30 seconds to distribute oil throughout the engine. Then allow the engine to idle for 60 seconds.

TROUBLESHOOTING

HINT: Before troubleshooting the turbocharger, first check the engine itself. (Valve clearance, engine compression, ignition timing etc.)

INSUFFICIENT ACCELERATION, LACK OF POWER OR EXCESSIVE FUEL CONSUMPTION

(Possible Cause)	(Check Procedure and Correction Method)
1. TURBOCHARGING PRESSURE TOO LOW	Check turbocharging pressure.(See Page TC-7) **Turbocharging pressure:** **0.50 – 0.83 kg/cm²** **(7.1 – 11.8 psi, 49 –81 kps)** If the pressure is below specification, begin diagnosis from item 2.
2. RESTRICTED INTAKE SYSTEM	Check intake air system, and repair or replace parts as necessary.(See page TC-9)
3. LEAK IN INTAKE AIR SYSTEM	Check intake air system, and repair or replace parts as necessary. (See page TC-9)
4. RESTRICTED EXHAUST SYSTEM	Check exhaust system, and repair or replace parts as necessary. (See page TC-9)
5. LEAK IN EXHAUST SYSTEM	Check exhaust system, and repair or replace parts as necessary. (See page TC-9)
6. ERRATIC TURBOCHARGER OPERATION	Check rotation of impeller wheel. If it does not turn or turn with a heavy drag, replace the turbocharger assembly. Check axial and radial plays of impeller wheel. (See page TC-13) **Axial play: 0.13 mm (0.0051 in.) or less** **Radial play: 0.18 mm (0.0071 in.) or less** If not within specification, replace the turbocharger assembly.

ABNORMAL NOISE

(Possible Cause)	(Check Procedure and Correction Method)
1. TURBOCHARGING HEAT INSULATOR RESONNANCE	Check for loose, improperly installed or deformed insulator mount bolts, and repair or replace as necessary.
2. EXHAUST PIPE LEAKING OR VIBRATING	Check for deformed exhaust pipe, loose mount bolts or damaged gasket, and repair or replace as necessary.
3. ERRATIC TURBOCHARGER OPERATION	Refer to Item 6 of INSUFFICIENT ACCELERATION, LACK OF POWER OR EXCESSIVE FUEL CONSUMPTION.

EXCESSIVE OIL CONSUMPTION OR WHITE EXHAUST

(Possible Cause)	(Check Procedure and Correction Method)
FAULTY TURBOCHARGER SEAL	Check for oil leakage in exhaust system. • Remove the turbine elbow from the turbocharger and check for excessive carbon deposits on the turbine wheel. Excessive carbon deposits indicate a faulty turbocharger. Check for oil leakage in intake air system. • Check for axial and radial plays in impeller wheel, and replace the turbocharger if necessary. (See page TC-13) **Axial play: 0.13 mm (0.0051 in.) or less** **Radial play: 0.18 mm (0.0071 in.) or less** **NOTICE: There is some oil mist from the PCV in the blowby gas so care must be taken not to diagnosis this as oil leakage from the turbocharger.**

TURBOCHARGER

ON-VEHICLE INSPECTION OF TURBOCHARGER

1. INSPECT INTAKE AIR SYSTEM

Check for leakage or clogging between the air cleaner and turbocharger inlet and between the turbocharger outlet and cylinder head.

- Clogged air cleaner . . . . Clean or replace element
- Hoses collapsed or deformed . . . . Repair or replace
- Leakage from connections . . . . Check each connection and repair
- Cracks in components . . . . Check and replace

2. INSPECT EXHAUST SYSTEM

Check for leakage or clogging between the cylinder head and turbocharger inlet and between the turbocharger outlet and exhaust pipe.

- Deformed components . . . . Repair or replace
- Foreign material in passages . . . . Remove
- Leakage from components . . . . Repair or replace
- Cracks in components . . . . Check and replace

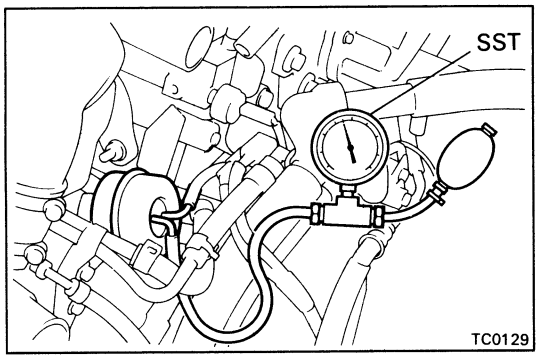

3. INSPECT ACTUATOR OPERATION

(a) Disconnect the actuator hose.

(b) Using SST (turbocharger pressure gauge), apply approx. 0.66 kg/cm^2 (9.4 psi, 65 kpa) of pressure to the actuator and check that the rod moves.

If the rod does not move, replace the turbocharger assembly.

SST 09992-00241

NOTICE: Never apply more than 0.83 kg/cm^2 (11.8 psi, 81 kPa) of pressure to the actuator.

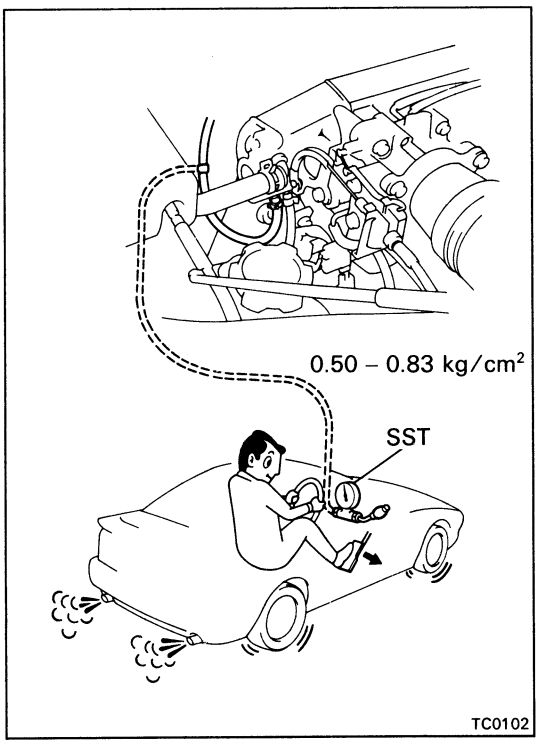

4. CHECK TURBOCHARGING PRESSURE

(a) Using a 3-way connector, connect SST (turbocharger pressure gauge) to the hose between the intake manifold and turbocharging pressure sensor.

SST 09992-00241

(b) While driving with the engine running at 2,800 rpm or more with the throttle valve fully open in the 3rd gear, check the turbocharging pressure.

Standard pressure: 0.50 – 0.83 kg/cm^2 (7.1 – 11.8 psi, 49 – 81 kPa)

If the pressure is less than that specified, check the intake air and exhaust systems for leakage. If there is no leakage, replace the turbocharger assembly.

If the pressure is above specification, check if the actuator hose is disconnected or cracked. If not, replace the turbocharger assembly.

5. **INSPECT IMPELLER WHEEL ROTATION**
(See step 1 on page TC-13)

6. **INSPECT TURBOCHARGING PRESSURE VSV**
(See page FI-165)

7. **INSPECT TURBOCHARGING PRESSURE SENSOR**
(See page FI-171)

COMPONENTS

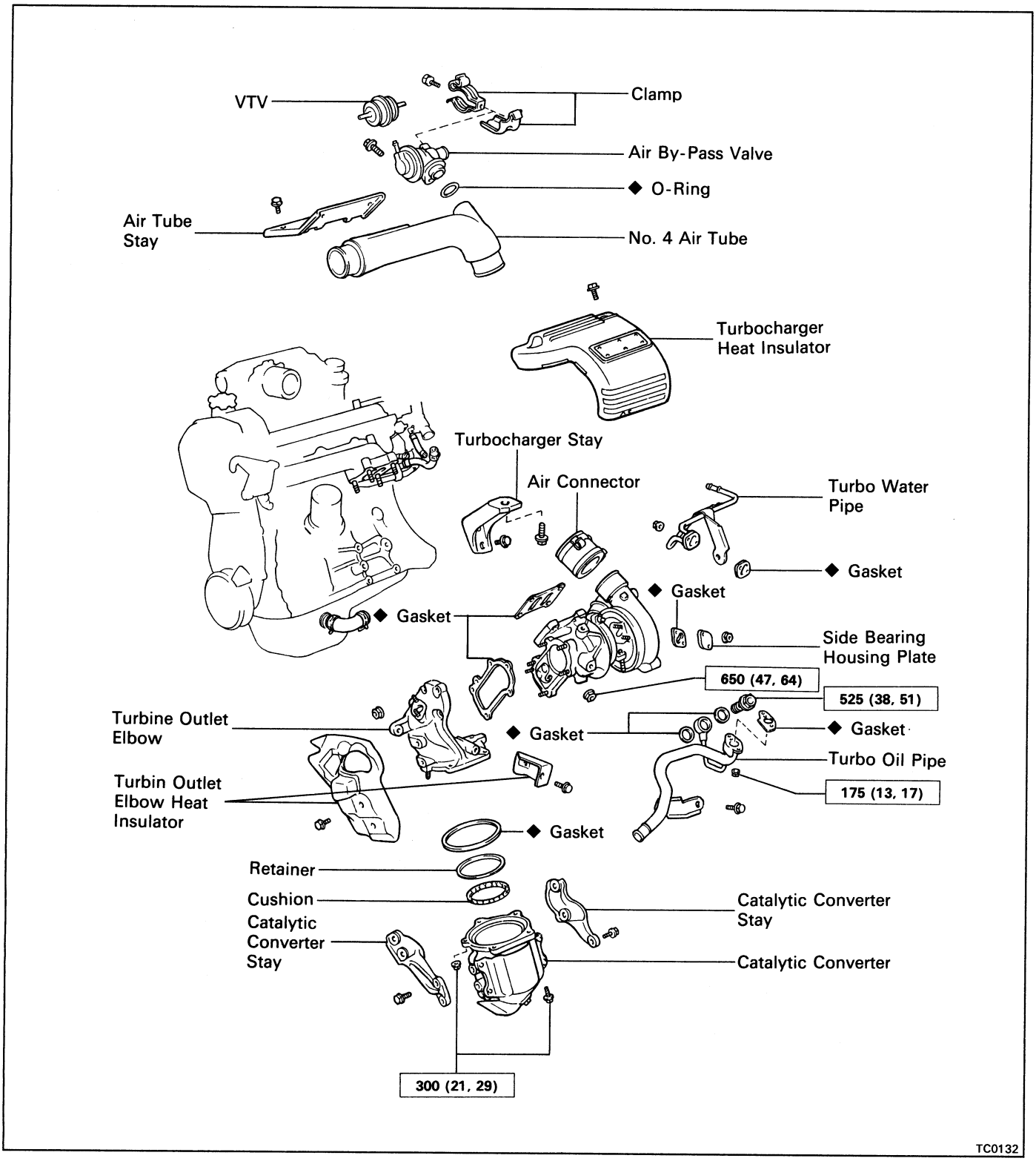

REMOVAL OF TURBOCHARGER

1. **DISCONNECT CABLE FROM NEGATIVE TERMINAL OF BATTERY**

   CAUTION: Work must be started after approx. 20 seconds or longer from the time the ignition switch is turned to the "LOCK" position and the negative (–) terminal cable is disconnected from the battery.

2. **DRAIN ENGINE COOLANT (See page CO-6)**

3. **REMOVE ENGINE UNDER COVERS**

4. **REMOVE LH ENGINE HOOD SIDE PANEL**

5. **REMOVE SUSPENSION UPPER BRACE**
   (See step 8 on page EM-134)

6. **REMOVE AIR CLEANER**
   (See step 9 on page EM-134)

7. **REMOVE NO.1 AND NO.2 AIR INTAKE CONNECTORS**
   (See steps 4 and 5 on page TC-20)

8. **DISCONNECT TRANSAXLE CONTROL CABLES**
   (See step 29 on page EM-138)

9. **REMOVE FRONT EXHAUST PIPE**
   (See steps 30 and 31 on pages EM-138 and 139)

10. **REMOVE IDLER PULLEY BRACKET AND A/C COMPRESSOR**
    (See steps 10 to 12 on page TC-21 and 22)

11. **REMOVE FRONT ENGINE MOUNTING INSULATOR**
    (See step 38 on page EM-141)

12. **REMOVE FRONT MOUNTING BRACKET AND CLUTCH RELEASE CYLINDER**
    (See step 39 on page EM-141)

13. **REMOVE ENGINE COMPARTMENT COOLING FAN**
    (See steps 4 and 5 on page CO-34)

14. **REMOVE CATALYTIC CONVERTER**
    (See step 14 on page EM-64)

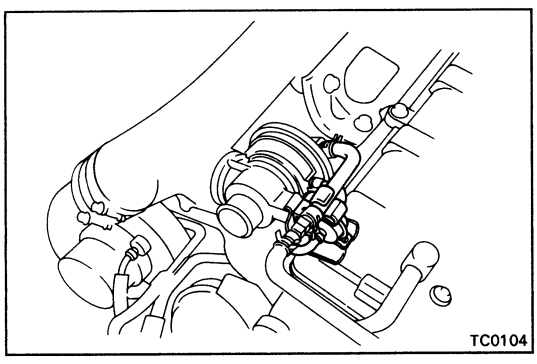
TC0104

15. **DISCONNECT AIR BY-PASS HOSES**
    (a) Disconnect the hose and VTV from the clamp.
    (b) Disconnect the two air by-pass hoses.

16. **REMOVE CLAMPS OF AIR BY-PASS HOSE AND VTV**
    Remove the bolt and two clamps.

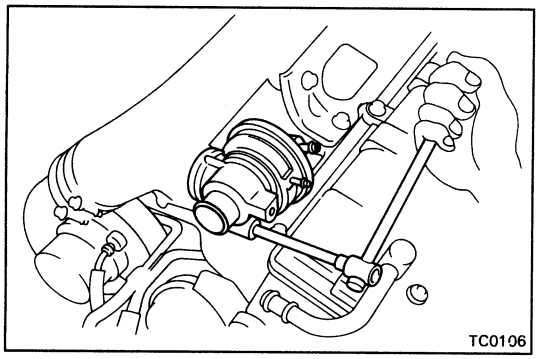

17. REMOVE AIR BY-PASS VALVE

(a) Remove the bolt and air by-pass valve.

(b) Remove the O-ring from the air by-pass valve.

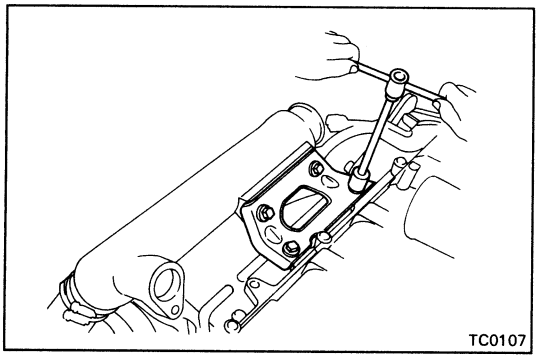

18. REMOVE NO.4 AIR TUBE

(a) Remove the four bolts and air tube stay.

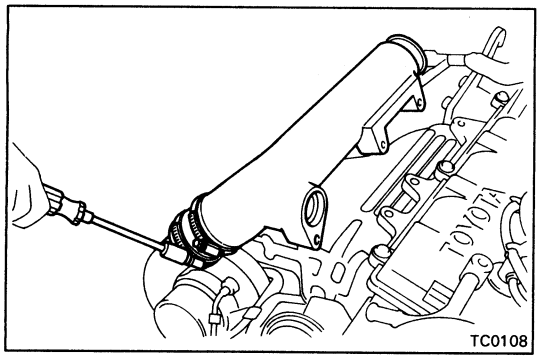

(b) Loosen the hose clamp, and remove the air tube.

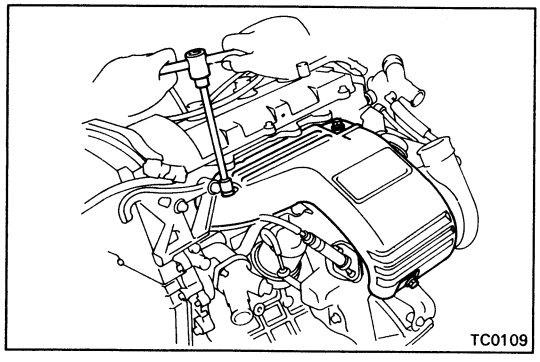

19. REMOVE TURBOCHARGER HEAT INSULATOR

Remove the three bolts and heat insulator.

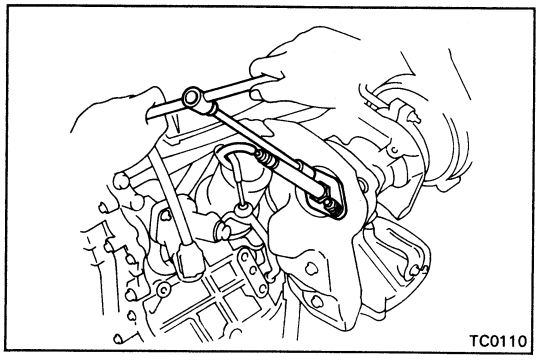

20. REMOVE OXYGEN SENSOR

(a) Disconnect the oxygen sensor connector.

(b) Remove the two nuts, oxygen sensor and gasket.

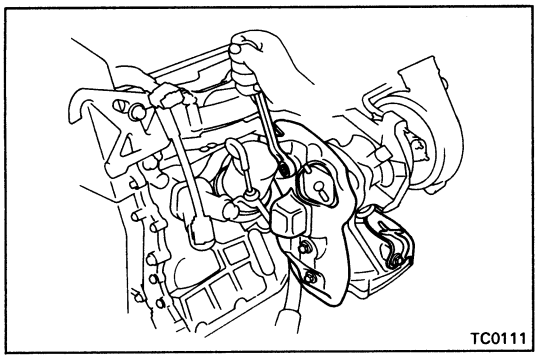

21. REMOVE HEAT INSULATORS OF TURBINE OUTLET ELBOW

(a) Remove the oil dipstick.

(b) Remove the three bolts and RH heat insulator.

(c) Remove the two bolts and LH heat insulator.

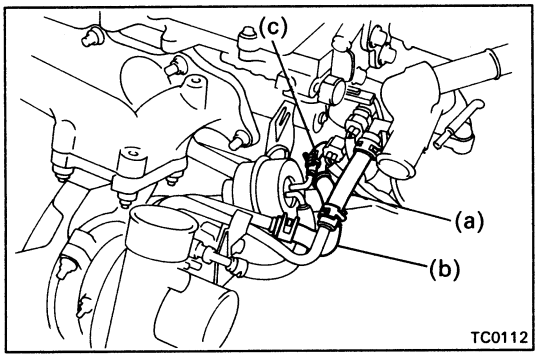

22. DISCONNECT HOSES

(a) Water hose from water inlet housing

(b) Water by-pass hose from water by-pass pipe

(c) Vacuum hose from actuator

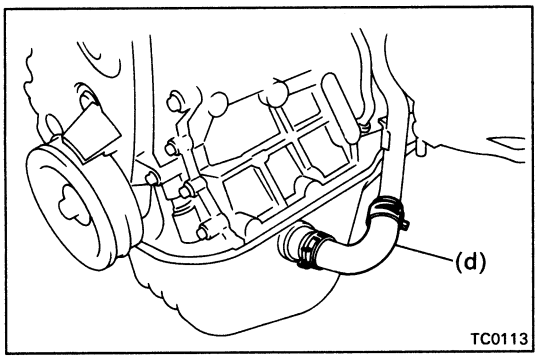

(d) Oil hose from turbo oil pipe

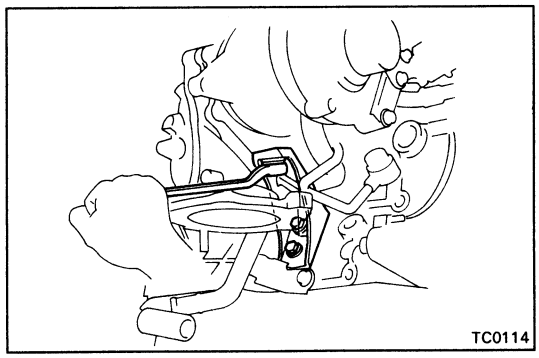

23. REMOVE TURBOCHARGER STAY

Remove the three bolts and turbocharger stay.

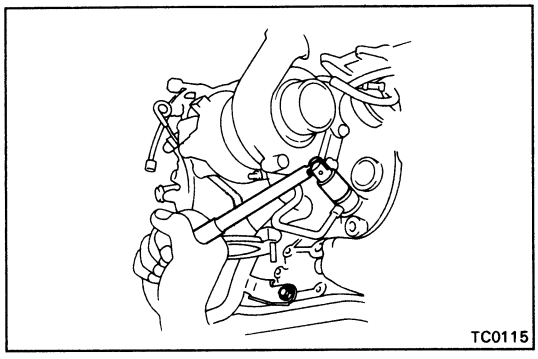

24. REMOVE TURBOCHARGER

(a) Remove the bolt and union bolt holding the No.1 turbo oil pipe to the cylinder block. Remove the two union bolt gaskets.

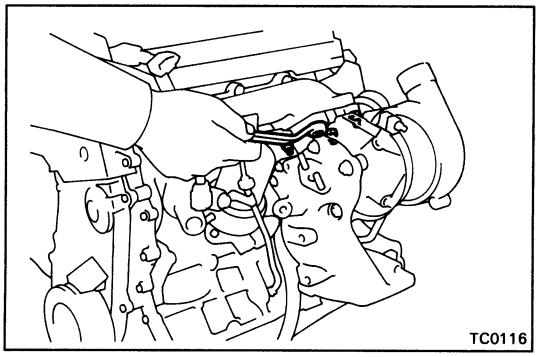

(b) Remove the four nuts, turbocharger and gasket.

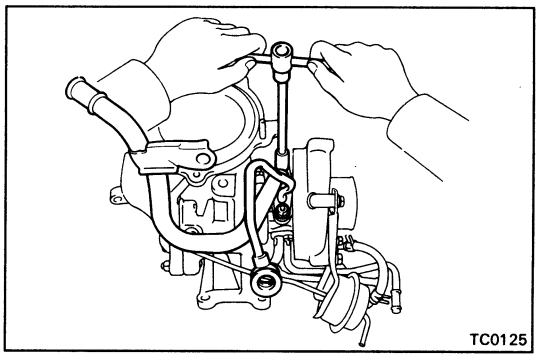

25. REMOVE TURBO OIL PIPE

Remove the two nuts, oil pipe and gasket.

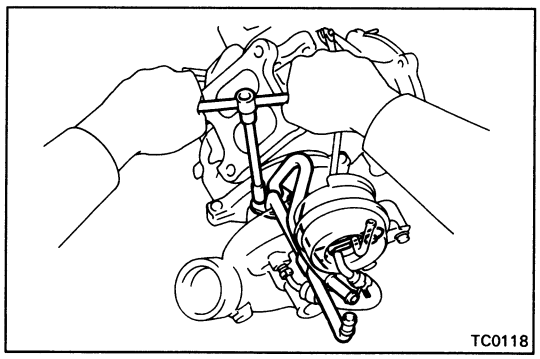

26. REMOVE TURBO WATER PIPE

Remove the two nuts, two bolts, water pipe and gasket.

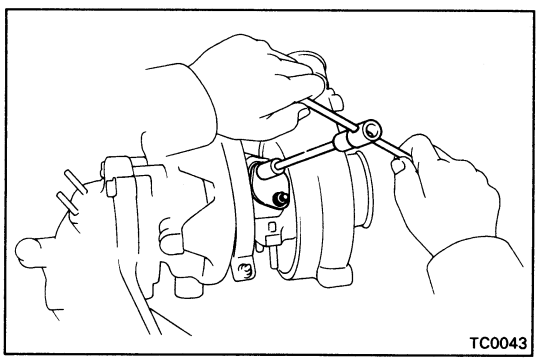

27. REMOVE SIDE BEARING HOUSING PLATE

Remove the two nuts, housing plate and gasket.

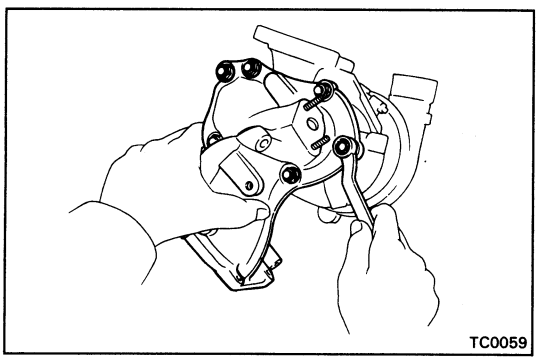

28. REMOVE TURBINE OUTLET ELBOW

Remove the six nuts, outlet elbow and gasket.

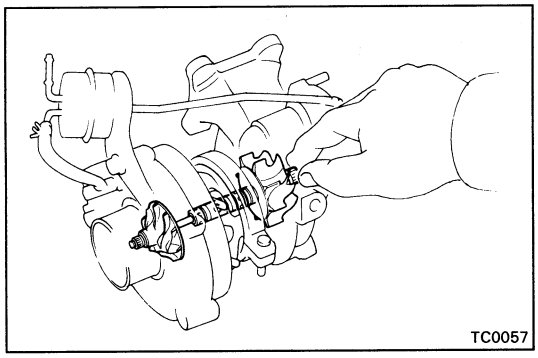
TC0057

INSPECTION OF TURBOCHARGER

1. INSPECT IMPELLER WHEEL ROTATION

Grasp the edge of the turbine wheel and turn it. Check that the impeller wheel turns smoothly.

If the impeller wheel does not turn or if it turns with a drag, replace the turbocharger assembly.

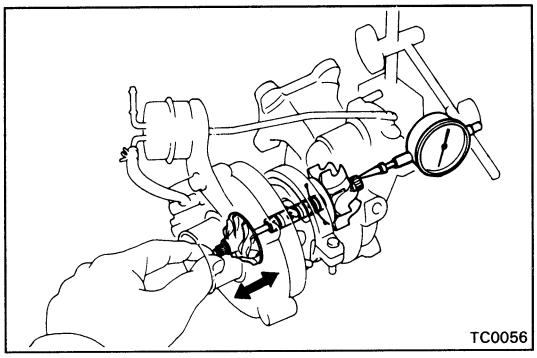
TC0056

2. INSPECT AXIAL PLAY OF IMPELLER WHEEL

Insert a dial indicator into the intake side hole the turbine wheel edge by and check the axial play.

Standard clearance: 0.13 mm (0.0051 in.) or less

If the axial play is not as specified, replace the turbocharger assembly.

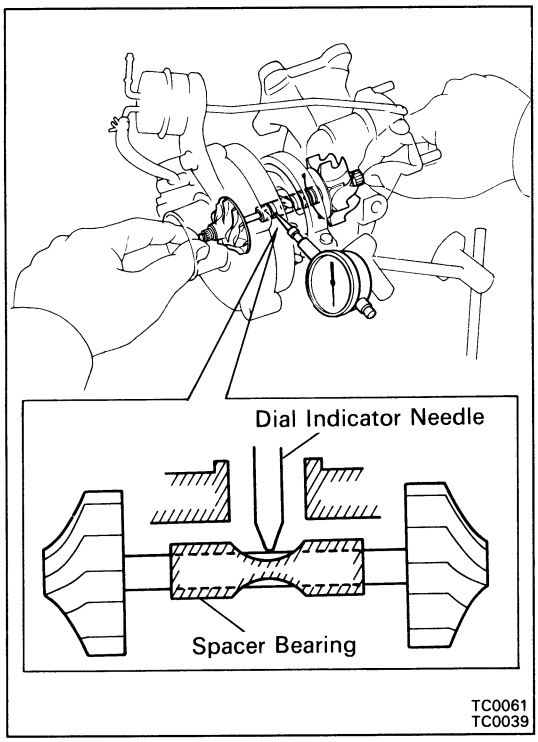

TC0061
TC0039

3. INSPECT RADIAL PLAY OF IMPELLER WHEEL

(a) From oil outlet hole, insert a dial indicator through the hole in the spacer bearing and set it in the center of the impeller shaft.

(b) Move the impeller shaft in a radial direction, measure the radial play of the impeller shaft.

Standard clearance: 0.18 mm (0.0071 in.) or less

If the radial play is not as specified, replace the turbocharger assembly.

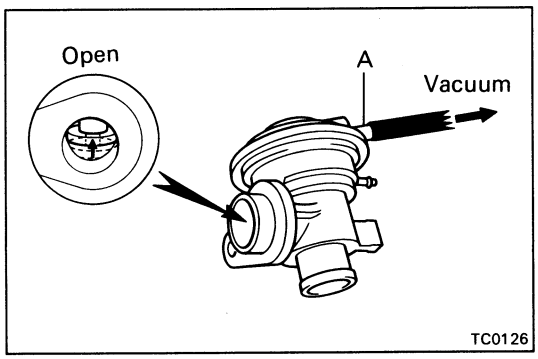

TC0126

4. INSPECT AIR BY-PASS VALVE

(a) Apply vacuum to port A, and check that the valve is open.

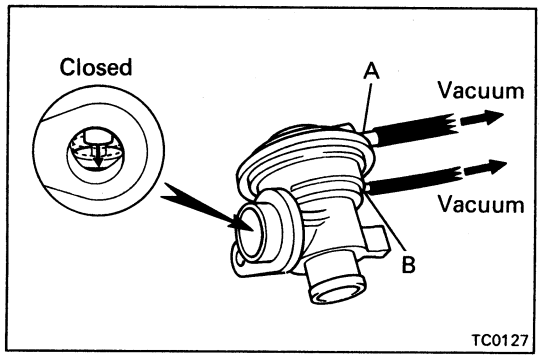

(b) In the preceding condition, apply vacuum to port B, and check that the valve is closed.

If operation is not as specified, replace the air by-pass valve.

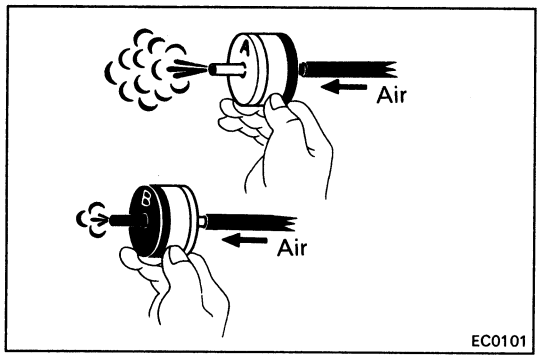

5. INSPECT VTV (FOR AIR BY-PASS VALVE)

(a) Check that air flows without resistance from ports "B" to "A".

(b) Check that air flows without difficuity from ports "A" to "B".

If operation is not as specified, replace the VTV.

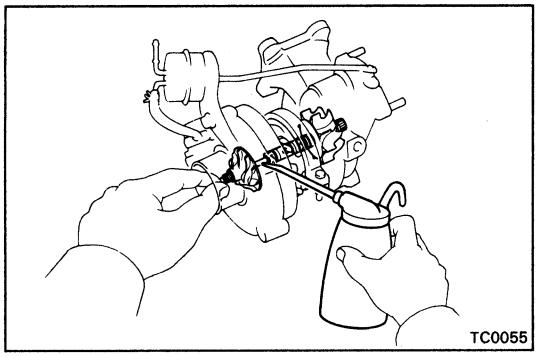

INSTALLATION OF TURBOCHARGER

(See page TC-8)

NOTICE: After replacing the turbocharger assembly, pour approx. 20 cc (1.2 cu in.) of new oil into the oil inlet and turn the impeller wheel by hand to splash oil on the bearing.

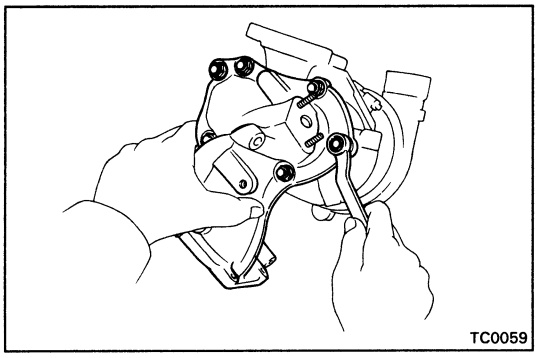

1. INSTALL TURBINE OUTLET ELBOW

Install a new gasket and the outlet elbow with the six nuts.

Torque: 650 kg-cm (47 ft-lb, 64 N·m)

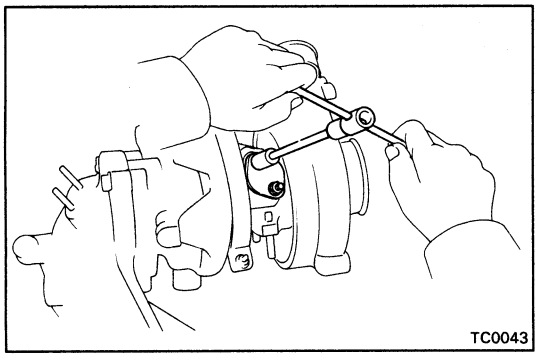

2. INSTALL SIDE BEARING HOUING PLATE

Install a new gasket and the housing plate with the two nuts.

Torque: 120 kg-cm (9 ft-lb, 11 N·m)

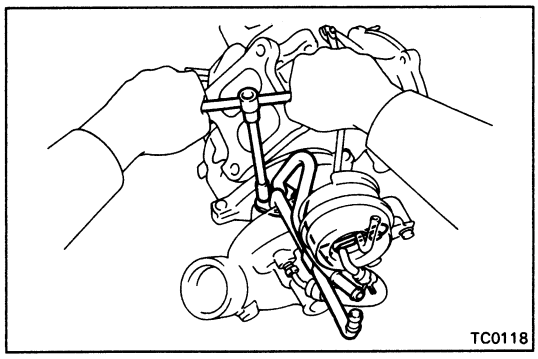

3. INSTALL TURBO WATER PIPE

Install a new gasket and the water pipe with the two nuts and two bolts.

Torque: 120 kg-cm (9 ft-lb, 11 N·m)

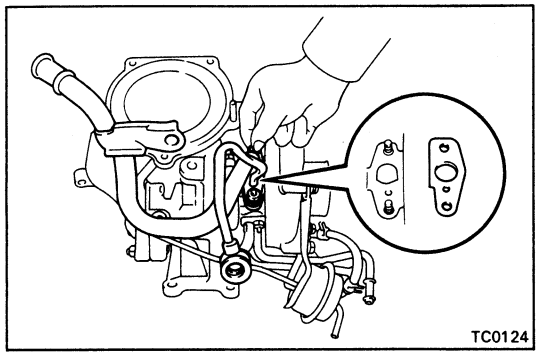

4. INSTALL TURBO OIL PIPE

(a) Align the oil holes of the a new gasket and the turbocharger housing.

(b) Install the gasket and oil pipe with the two nuts. Do not torque the nuts yet.

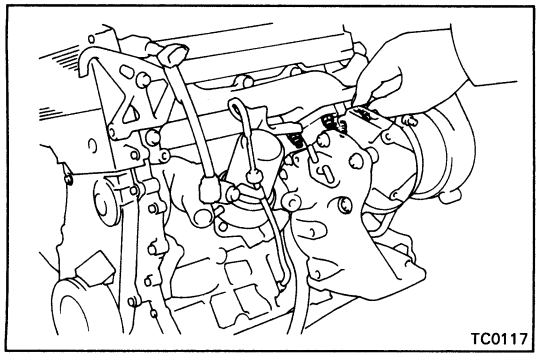
TC0117

5. INSTALL TURBOCHARGER

(a) Install a new gasket and the turbocharger with the four nuts. Do not torque the nuts.

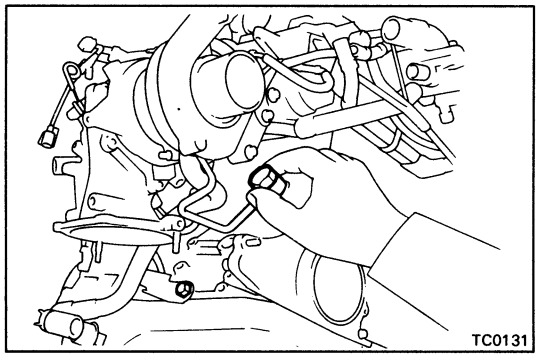
TC0131

(b) Install the oil pipe with the bolt, two new gaskets and union bolt. Do not torque the bolt and union bolt.

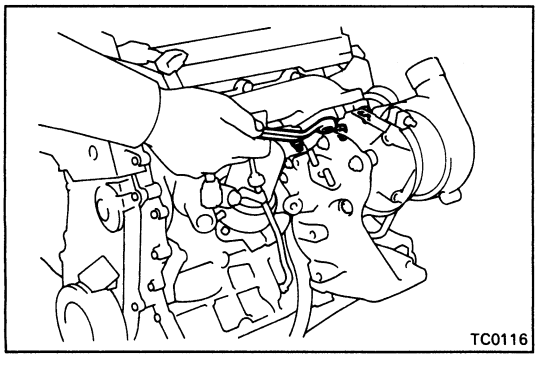
TC0116

(c) Tighten the four nuts holding the turbocharger to the exhaust manifold.

Torque: 650 kg-cm (47 ft-lb, 64 N·m)

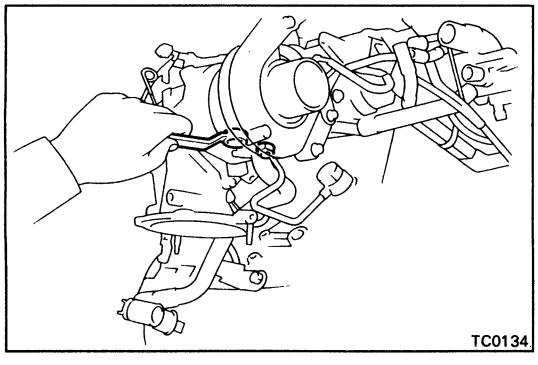
TC0134

(d) Tighten the two nuts holding the oil pipe to the turbocharger.

Torque: 175 kg-cm (13 ft-lb, 17 N·m)

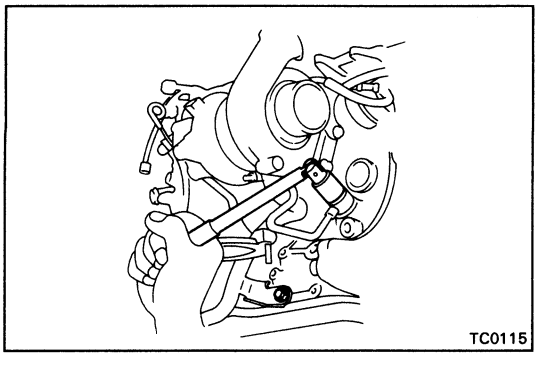
TC0115

(e) Tighten the union bolt holding the oil pipe to the cylinder block.

Torque: 525 kg-cm (38 ft-lb, 51 N·m)

(f) Tighten the union bolt holding the oil pipe to the cylinder block.

Torque: 440 kg-cm (32 ft-lb, 43 N·m)

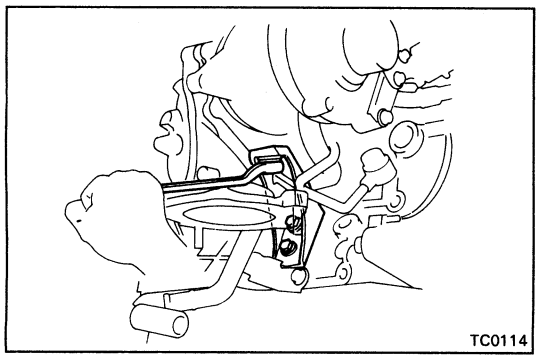

6. INSTALL TURBOCHARGER STAY

Install the turbocharger stay with the three bolts.

Torque:

To turbocharger	**705 kg-cm (51 ft-lb, 69 N·m)**
To cylinder block	**600 kg-cm (43 ft-lb, 59 N·m)**

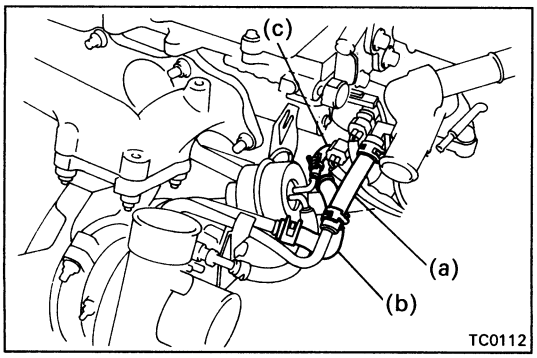

7. CONNECT HOSES

(a) Water hose from water inlet housing

(b) Water by-pass hose from water by-pass pipe

(c) Vacuum hose from actuator

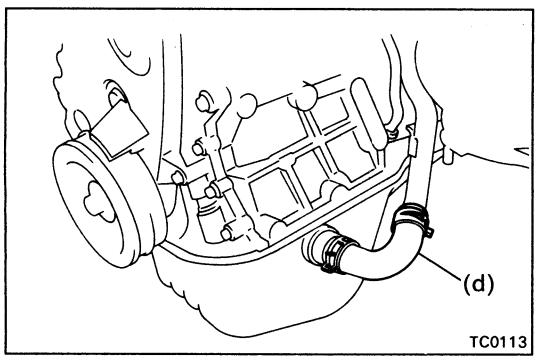

(d) Oil hose from turbo oil pipe

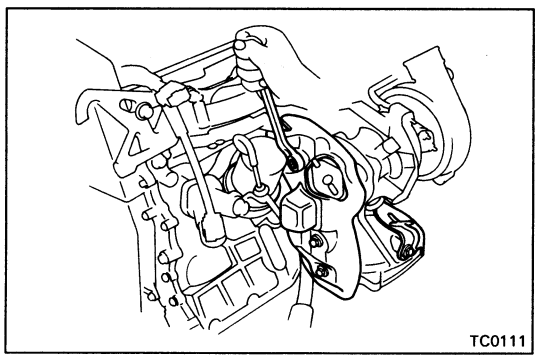

8. INSTALL HEAT INSULATORS OF TURBINE OUTLET ELBOW

(a) Install the RH heat insulator with the three bolt.

(b) Install the LH heat insulator with the two bolt.

(c) Install the oil dipstick gauge.

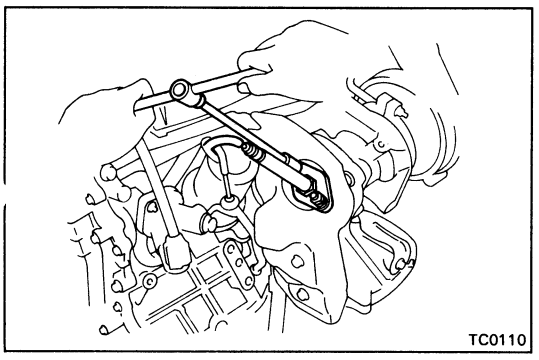

9. INSTALL OXYGEN SENSOR

(a) Install a new gaskets and the oxygen sensor with the two nuts.

Torque: 450 kg-cm (33 ft-lb, 44 N·m)

(b) Connect the oxygen sensor connector.

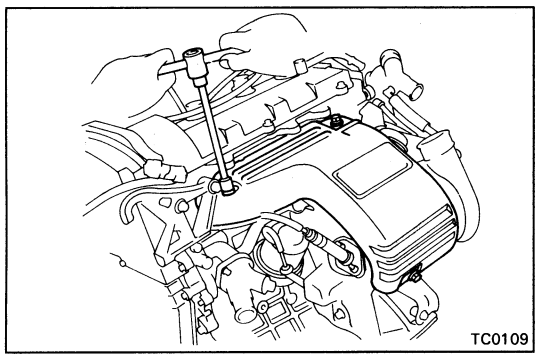
TC0109

10. INSTALL TURBOCHARGER HEAT INSULATOR

Install the heat insulator with the three bolt.

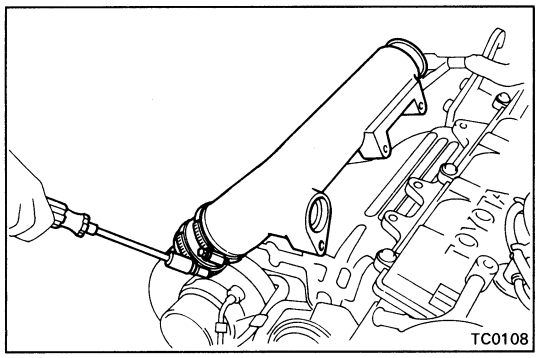

TC0108

11. INSTALL NO.4 AIR TUBE

(a) Connect the air connector and air tube to the turbocharger.

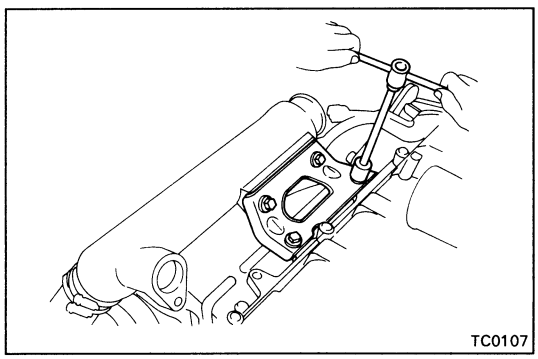
TC0107

(b) Install the air tube stay with the four bolts.

Torque: 195 kg-cm (14 ft-lb, 19 N·m)

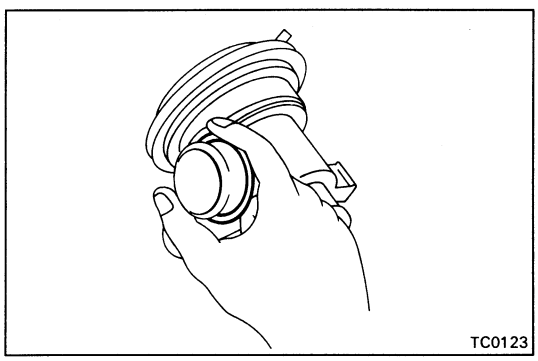
TC0123

12. INSTALL AIR BY-PASS VALVE

(a) Install a new O-ring to the air by-pass valve.

(b) Apply soapy water on the O-ring.

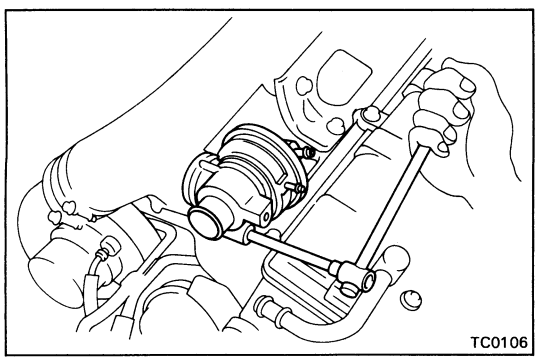
TC0106

(c) Install the air by-pass valve with the bolt.

Torque: 195 kg-cm (14 ft-lb, 19 N·m)

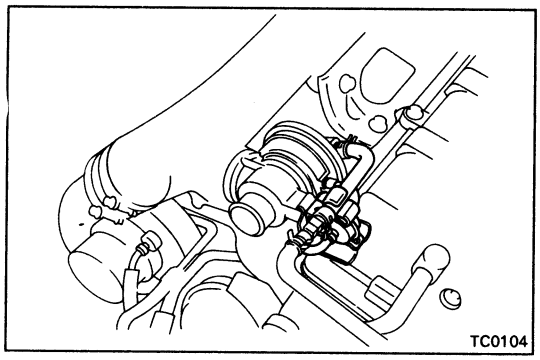

13. **INSTALL CLAMPS OF AIR BY-PASS HOSE AND VTV**
Install the two clamps with the bolt.

14. **CONNECT AIR BY-PASS HOSES**
(a) Connect the two air by-pass hoses.
(b) Install the air by-pass hose and VTV to the clamps.

15. **INSTALL CATALYTIC CONVERTER**
(See step 28 on page EM-94)

16. **INSTALL ENGINE COMPARTMENT COOLING FAN**
(See steps 1 and 2 on page CO-36)

17. **INSTALL FRONT MOUNTING BRACKET AND CLUTCH RELEASE CYLINDER**
(See step 9 on pages EM-171 and 172)

18. **INSTALL FRONT ENGINE MOUNTING INSULATOR**
(See step 10 on page EM-172)

19. **INSTALL A/C COMPRESSOR AND IDLER PULLEY BRACKET**
(See steps 3 to 5 on pages TC-23 and 24)

20. **INSTALL FRONT EXHAUST PIPE**
(See steps 18 and 19 on pages EM-174 and 175)

21. **CONNECT TRANSAXLE CONTROL CABLES**
(See step 20 on page EM-175)

22. **INSTALL NO.1 AND NO.2 AIR INTAKE CONNECTORS**
(See steps 10 and 11 on page TC-25)

23. **INSTALL AIR CLEANER**
(See step 40 on page EM-179)

24. **INSTALL SUSPENSION UPPER BRACE**
(See step 41 on page EM-179)

25. **FILL ENGINE WITH COOLANT (See page CO-7)**
Capacity (w/ Heater):
13.6 liters (14.4 US qts, 12.0 Imp. qts)

26. **CONNECT CABLE TO NEGATIVE TERMINAL OF BATTERY**

27. **START ENGINE AND CHECK FOR LEAKS**

28. **CHECK ENGINE OIL LEVEL**

29. **INSTALL LH ENGINE HOOD SIDE PANEL**

30. **INSTALL ENGINE UNDER COVERS**

INTERCOOLER

COMPONENTS

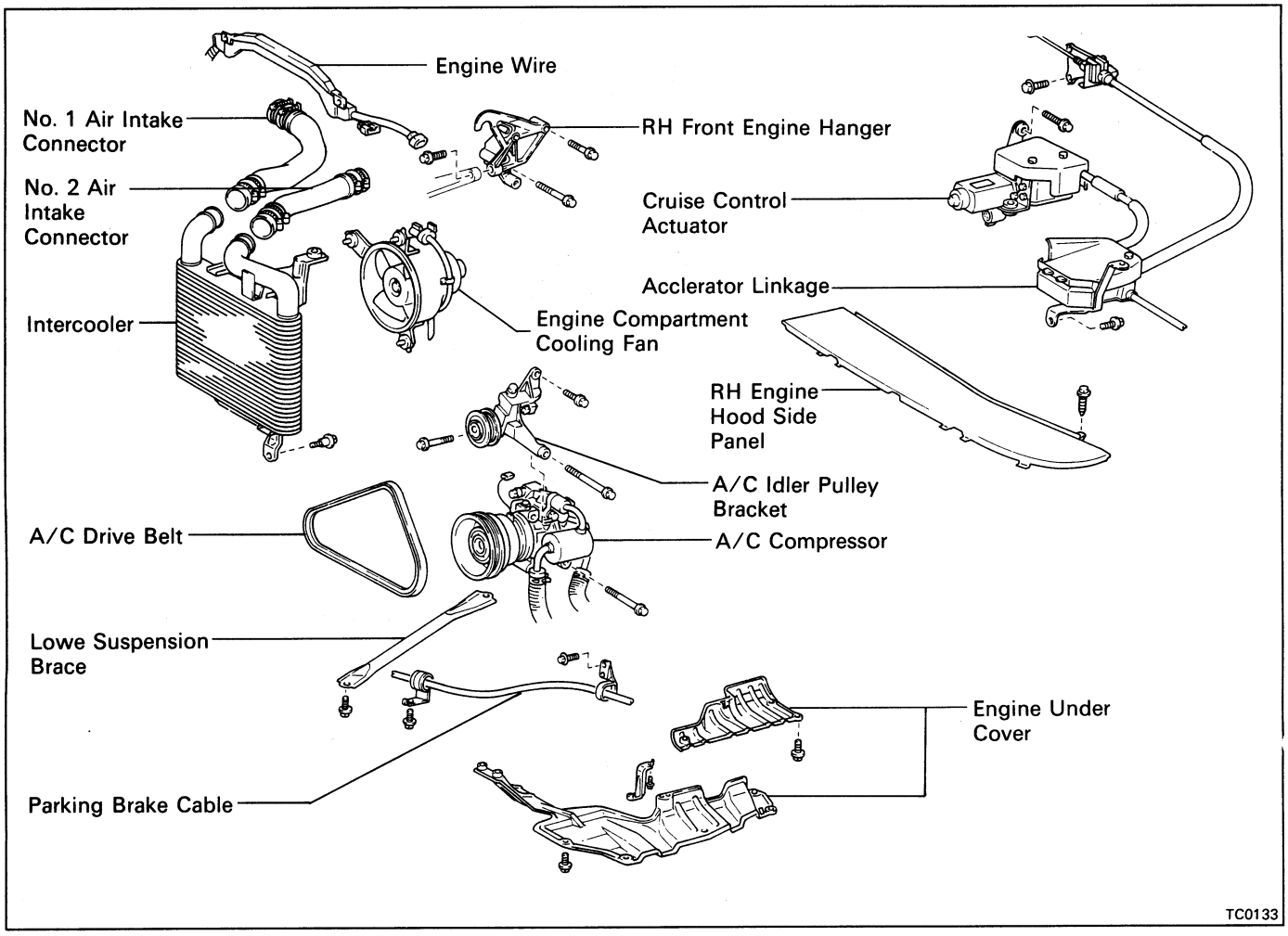

1. **DISCONNECT CABLE FROM NEGATIVE TERMINAL OF BATTERY**

   CAUTION: Work must be started after approx. 20 seconds or longer from the time the ignition switch is turned to the "LOCK" position and the negative (–) terminal cable is disconnected from the battery.

2. **REMOVE ENGINE UNDER COVERS**

3. **REMOVE RH ENGINE HOOD SIDE PANEL**

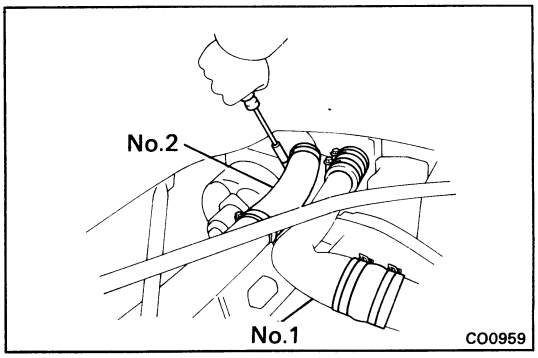

4. **REMOVE NO.1 AIR INTAKE CONNECTOR**

5. **REMOVE NO.2 AIR INTAKE CONNECTOR**

6. **REMOVE CRUISE CONTROL ACTUATOR (w/ CRUISE CONTROL SYSTEM) AND ACCELERATOR LINKAGE (See step 13 on page EM-135)**

7. **REMOVE ENGINE COMPARTMENT COOLING FAN**
(See steps 4 and 5 on page CO-34)

8. **DISCONNECT ENGINE WIRE CLAMPS FROM MOUNT BOLTS OF NO.2 TIMING BELT COVER**
(See step 12 (a) on page FI-111)

9. **REMOVE RH FRONT ENGINE HANGER**
(See step 11 on page EM-64)

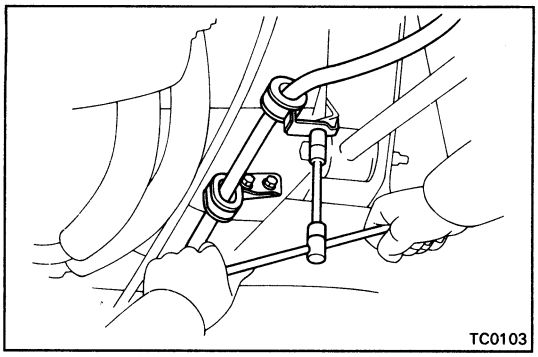
TC0103

10. **DISCONNECT PARKING BRAKE CABLE FROM BODY**
Remove the three clamp bolts, and disconnect the parking brake cable.

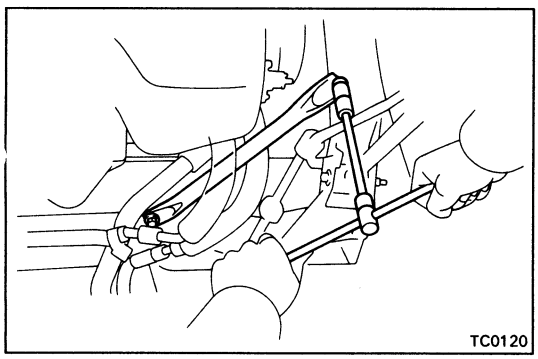
TC0120

11. **REMOVE LOWER SUSPENSION BRACE**
Remove the two bolts and suspension brace.

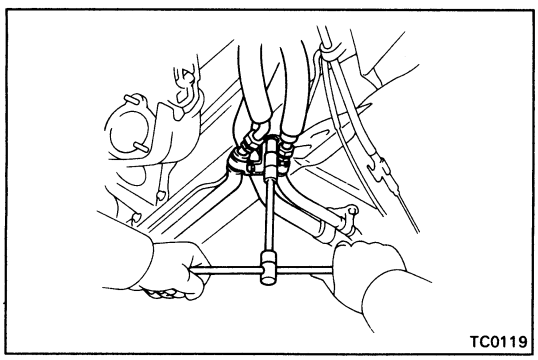
TC0119

12. **REMOVE IDLER PULLEY BRACKET AND A/C COMPRESSOR**
(a) Remove the clamp nut, and disconnect the A/C hoses.

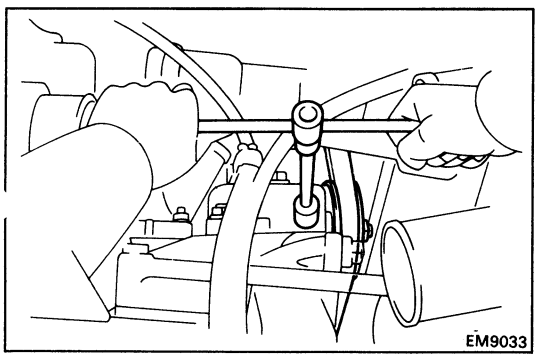
EM9033

(b) Loosen the idler pulley nut and adjusting bolt, and remove the drive belt.

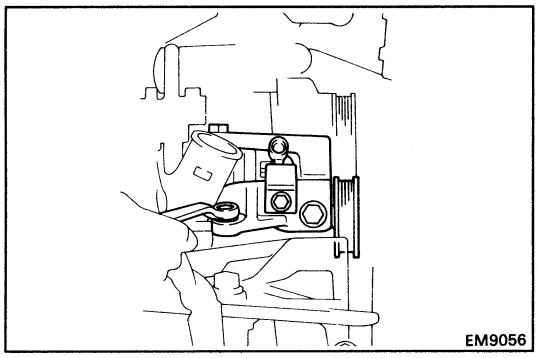

(c) Disconnect the A/C compressor connector.

(d) Remove the bolt and connector clamp of the A/C compressor.

(e) Remove the three bolts and idler pulley bracket.

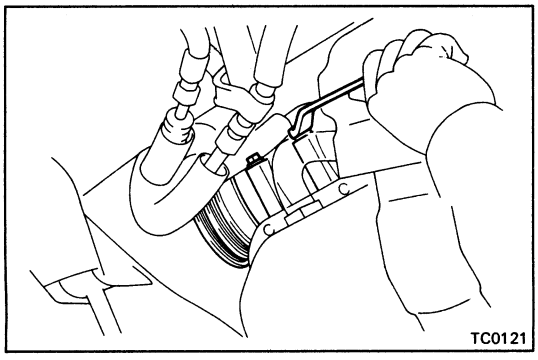

(f) Remove the two bolts, and disconnect the A/C compressor from the engine.

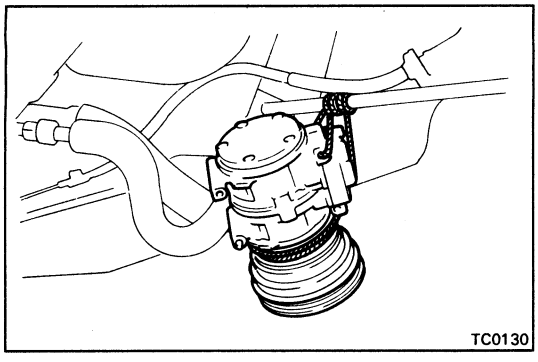

HINT: Suspend the compressor to the strut rod with a string.

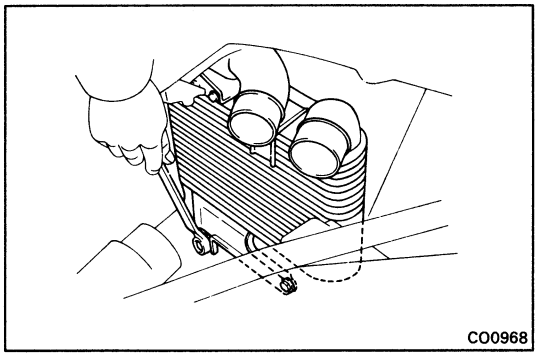

13. REMOVE INTERCOOLER

Remove the three bolts and intercooler.

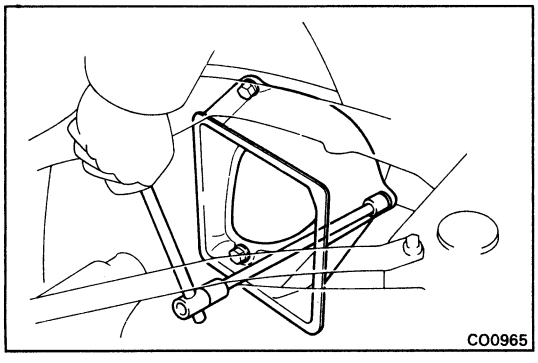

14. REMOVE COOL AIR INLET

Remove the three bolts and air inlet.

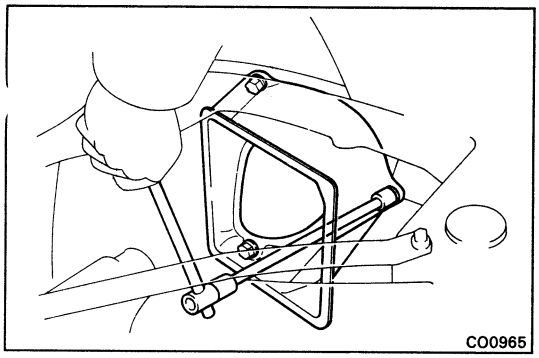

INSTALLATION OF INTERCOOLER

(See page TC-20)

1. INSTALL COOL AIR INLET

Install the air inlet with the three bolts.

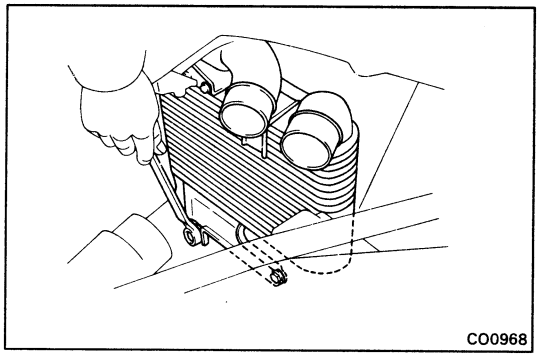

2. INSTALL INTERCOOLER

Install the intercooler with the three bolts.

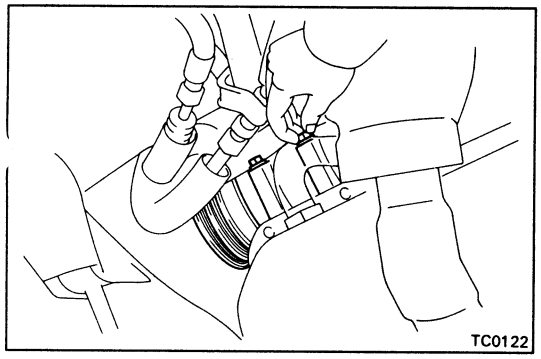

3. INSTALL A/C COMPRESSOR AND IDLER PULLEY BRACKET

(a) Temporarily install the A/C compressor with the two bolts.

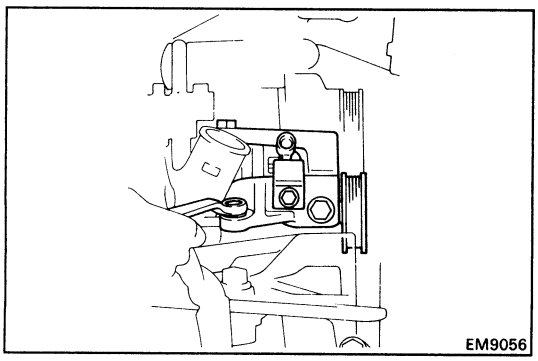

(b) Install the idler pulley bracket with three bolts.

Torque: A 275 kg-cm (20 ft-lb, 27 N·m)
B 375 kg-cm (27 ft-lb, 37 N·m)
C 250 kg-cm (18 ft-lb, 25 N·m)

(c) Install the connector clamp of the A/C compressor with the bolt.

(d) Connect the A/C compressor connector.

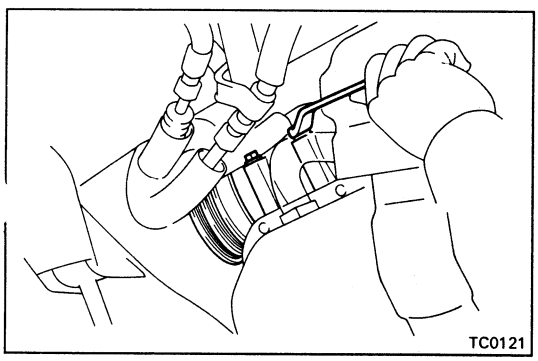

(e) Tighten the two bolts of the lower side holding the A/C compressor to the cylinder block.

Torque: 250 kg-cm (18 ft-lb, 25 N·m)

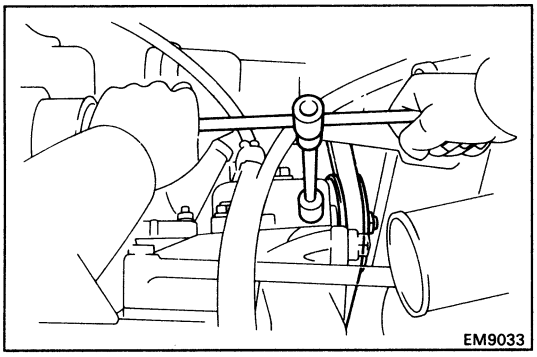

(f) Install the drive belt with the idler pulley nut and adjusting bolt.

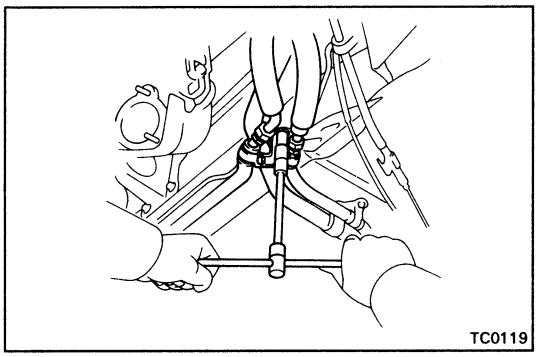

(g) Install the A/C hoses with the nut.

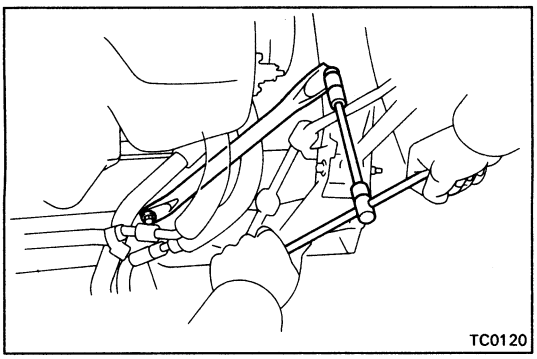

4. INSTALL LOWER SUSPENSION BRACE

Install the suspension brace with two bolts.

Torque: 740 kg-cm (54 ft-lb, 73 N·m)

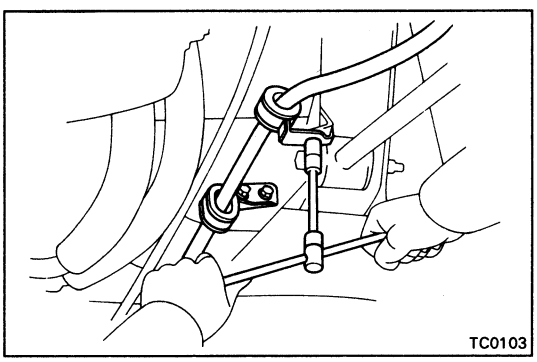

5. INSTALL PARKING BRAKE CABLE

Install the parking brake cable with the two clamps and three bolts.

6. INSTALL RH FRONT ENGINE HANGER
(See step 31 on page EM-95)

7. INSTALL ENGINE WIRE CLAMPS TO MOUNT BOLTS OF NO.2 TIMING BELT COVER
(See step 5 (b) on page FI-118)

8. INSTALL ENGINE COMPARTMENT COOLING FAN
(See steps 1 and 2 on page CO-36)

9. INSTALL CRUISE CONTROL ACTUATOR (w/ CRUISE CONTROL SYSTEM) AND ACCELERATOR LINKAGE
(See step 36 on page EM-178)

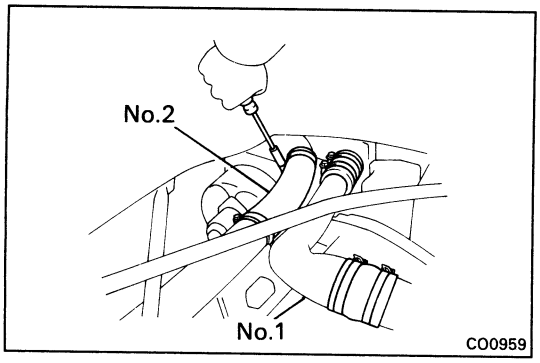

10. INSTALL NO.1 AIR INTAKE CONNECTOR

11. INSTALL NO.2 AIR INTAKE CONNECTOR

12. CONNECT CABLE TO NEGATIVE TERMINAL OF BATTERY

13. ADJUST A/C DRIVE BELT

Drive belt tension: New belt 160 ± 25 lb
Used belt 100 ± 20 lb

14. INSTALL RH ENGINE HOOD SIDE PANEL

15. INSTALL ENGINE UNDER COVERS

EMISSION CONTROL SYSTEMS

Page

(3S-GTE)

SYSTEM PURPOSE EC-2

COMPONENT LAYOUT AND SCHEMATIC DRAWING EC-3

POSITIVE CRANKCASE VENTILATION (PCV) SYSTEM EC-4

FUEL EVAPORATIVE EMISSION CONTROL (EVAP) SYSTEM EC-21

EXHAUST GAS RECIRCULATION (EGR) SYSTEM EC-24

THREE-WAY CATALYST (TWC) SYSTEM EC-28

(5S-FE)

SYSTEM PURPOSE EC-18

COMPONENT LAYOUT AND SCHEMATIC DRAWING EC-19

POSITIVE CRANKCASE VENTILATION (PCV) SYSTEM EC-20

FUEL EVAPORATIVE EMISSION CONTROL (EVAP) SYSTEM EC-21

EXHAUST GAS RECIRCULATION (EGR) SYSTEM EC-24

THREE-WAY CATALYST (TWC) SYSTEM EC-28

NOTE: TROUBLESHOOTING (See pages EM-6 to 9)

SYSTEM PURPOSE

System	Abbreviation	Purpose
Positive Crankcase ventilation	PCV	Reduces blow-by gas (HC)
Fuel evaporative emission control	EVAP	Reduces evaporative HC
Exhaust gas recirculation	EGR	Reduces Nox
Three-way catalyst	TWC	Reduces HC, CO and NOx
Electronic fuel injection*	EFI	Regulates all engine conditions for reduction of exhaust emissions.

Remarks * For inspection and repair of the EFI system, refer to EFI section of this manual.

COMPONENT LAYOUT AND SCHEMATIC DRAWING

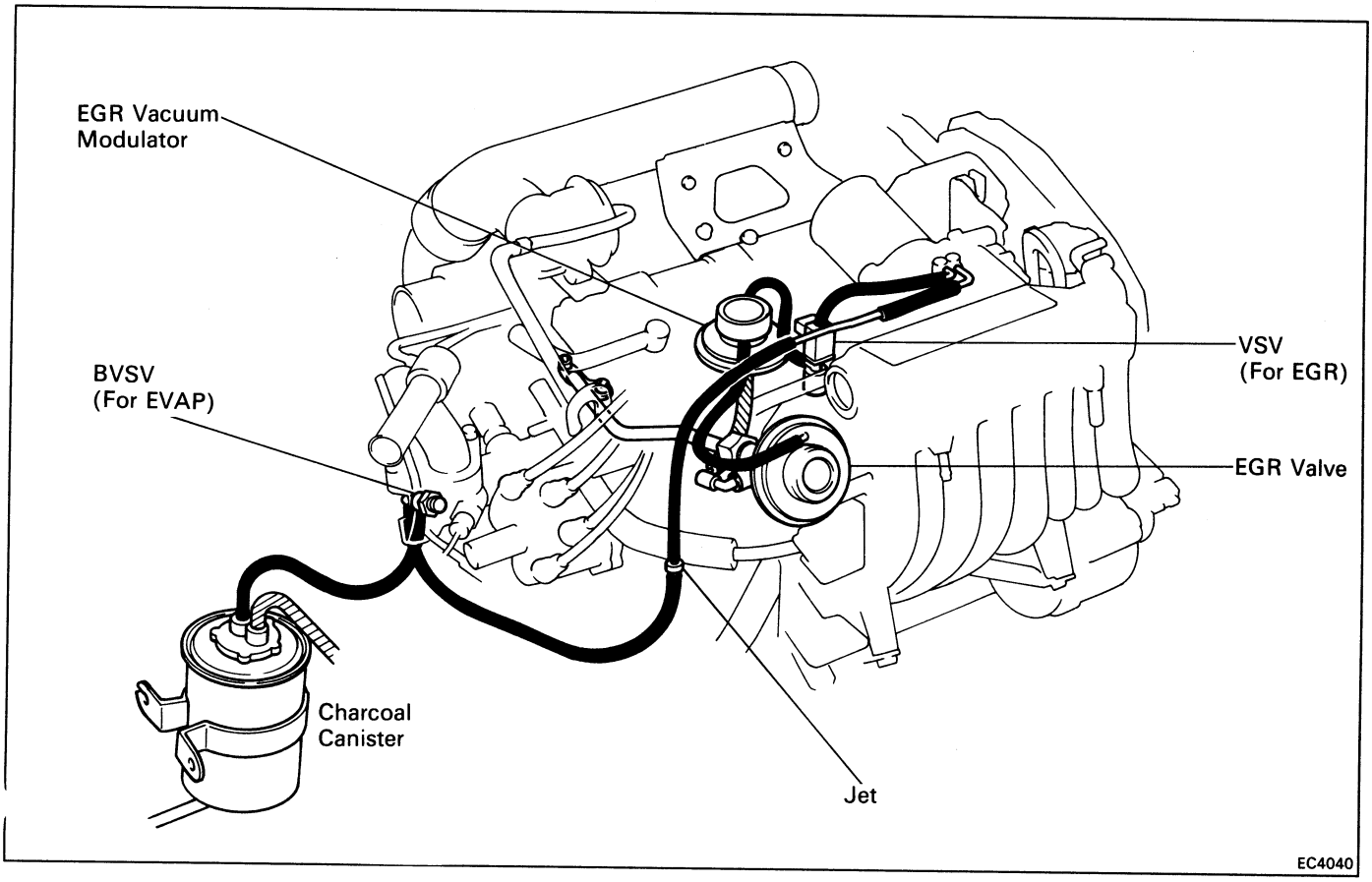

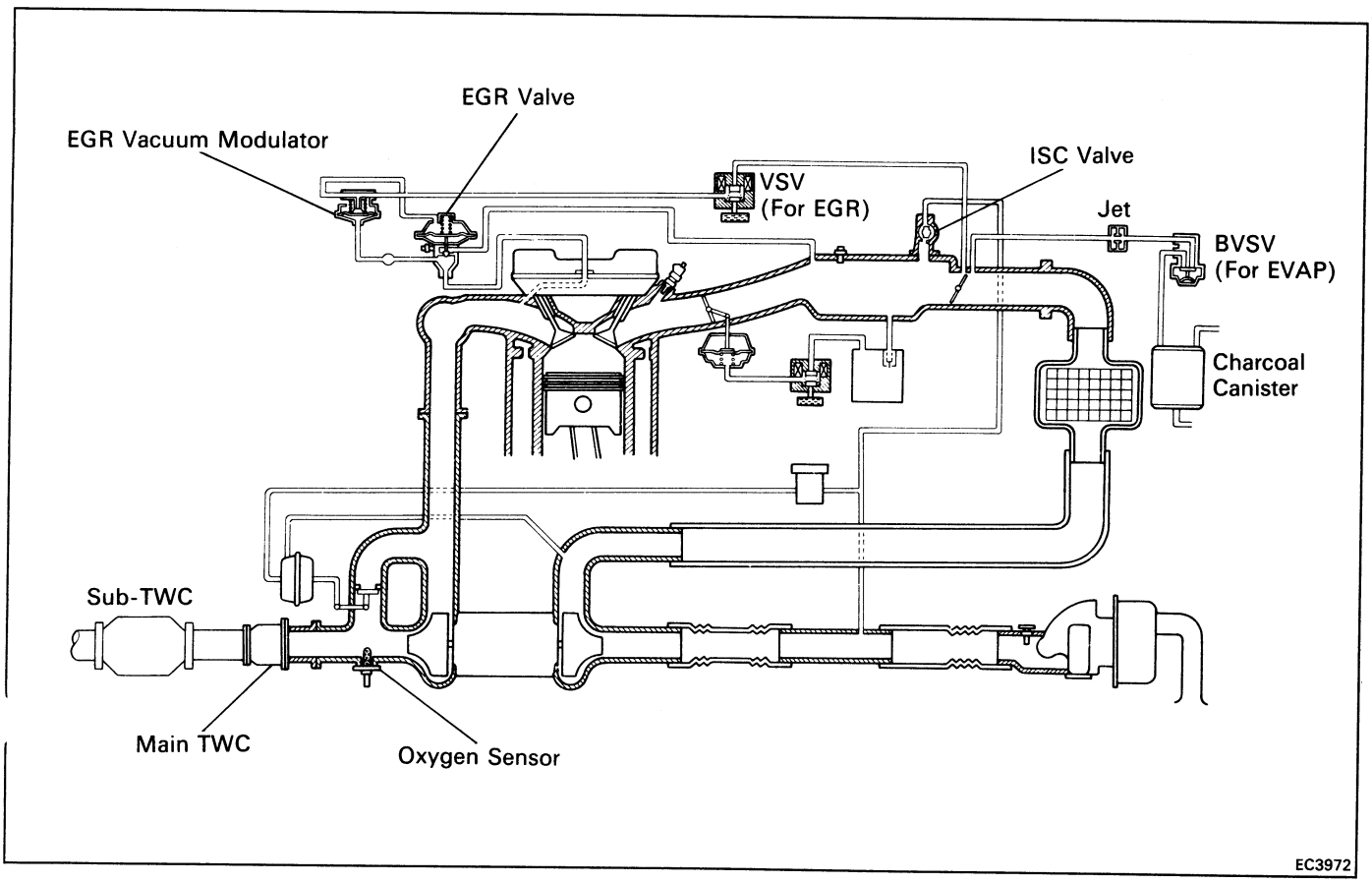

POSITIVE CRANKCASE VENTILATION (PCV) SYSTEM

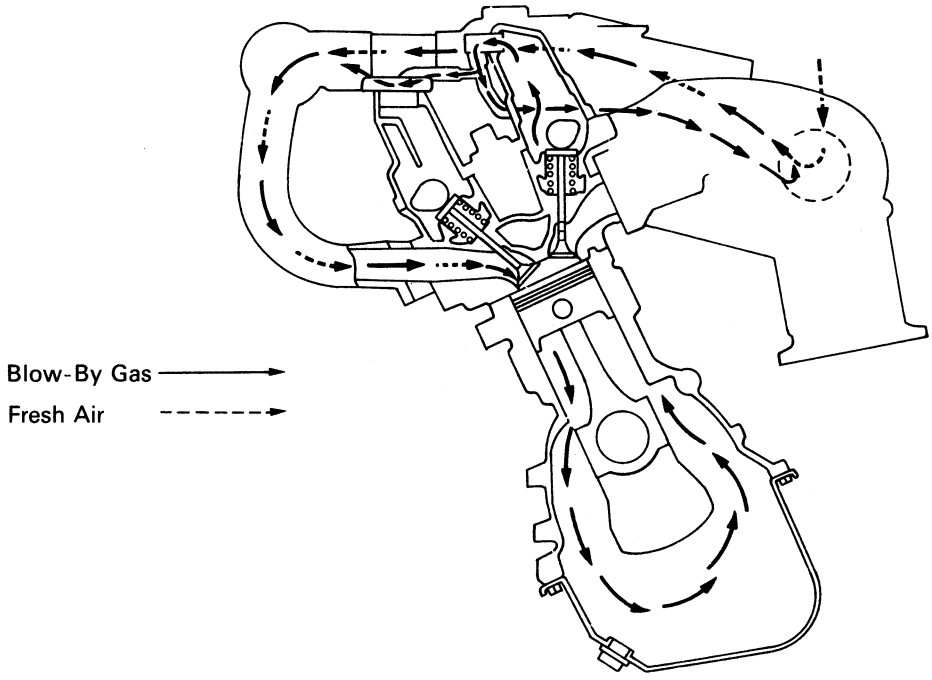

EC2829

To reduce HC emissions, crankcase blow-by gas (HC) is routed to the intake manifold for combustion in the cylinders.

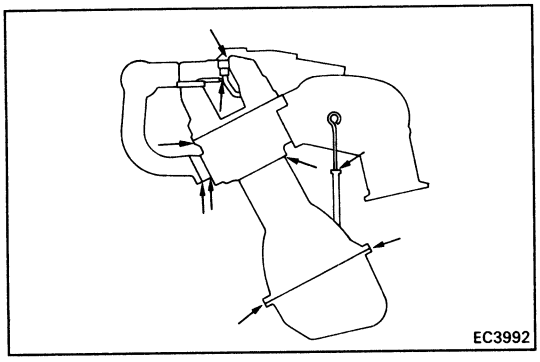

EC3992

INSPECTION OF PCV HOSE AND CONNECTIONS

VISUALLY INSPECT HOSE AND CONNECTIONS

Check for cracks, leaks or damage.

FUEL EVAPORATIVE EMISSION CONTROL (EVAP) SYSTEM

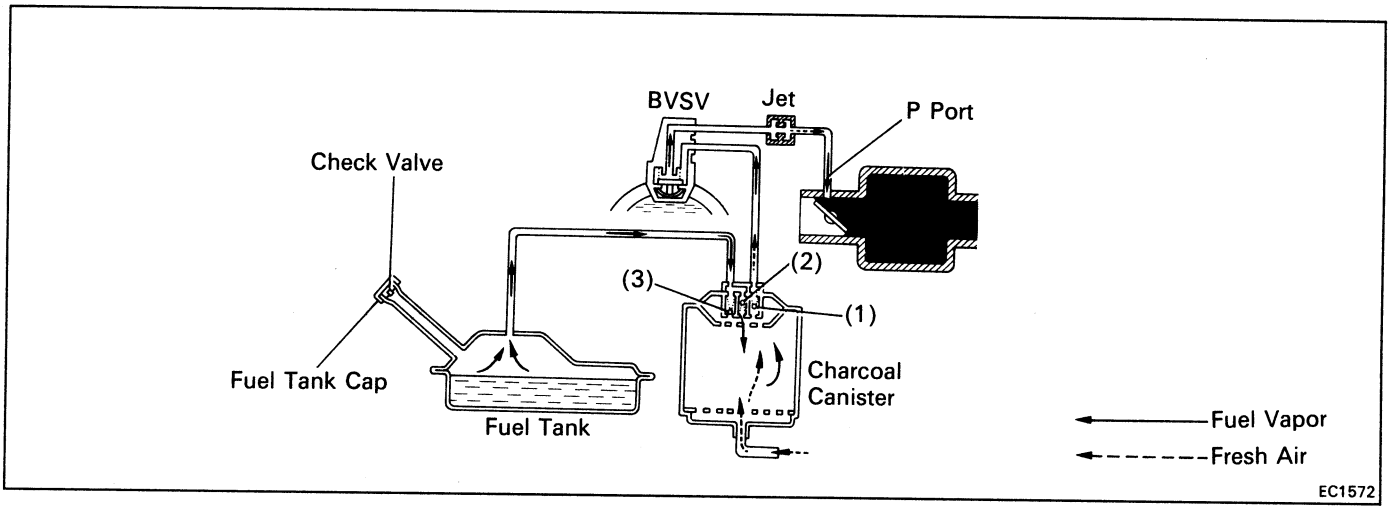

To reduce HC emission, evaporated fuel from the fuel tank is routed through the charcoal canister to the intake manifold for combustion in the cylinders.

Coolant Temp.	BVSV	Throttle Valve Opening	Canister Check Valve (1)	Canister Check Valve (2)	Canister Check Valve (3)	Check valve in Cap	Evaporated Fuel (HC)
Below 35°C (95°F)	CLOSED	–	–	–	–	–	HC from tank is absorbed into the canister.
Above 54°C (129°F)	OPEN	Positioned below P port	CLOSED	–	–	–	
		Positioned above P port	OPEN	–	–	–	HC from canister is led into air intake chamber.
High pressure in tank	–	–	–	OPEN	CLOSED	CLOSED	HC from tank is absorbed Into the canister.
High vacuum in take	–	–	–	CLOSED	OPEN	OPEN	Air is led into the fuel tank.

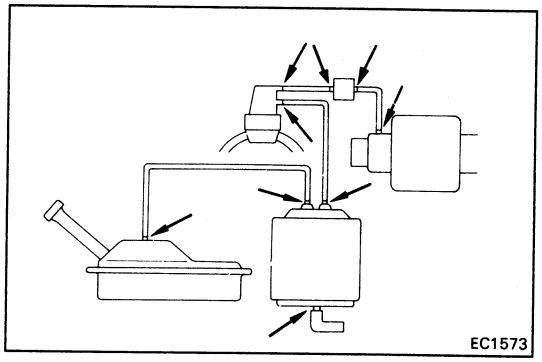

INSPECTION OF FUEL VAPOR LINES, FUEL TANK AND TANK CAP

1. **VISUALLY INSPECT LINES AND CONNECTIONS**
   Look for loose connections, sharp bends or damage.

2. **VISUALLY INSPECT FUEL TANK**
   Look for deformation, cracks or fuel leakage.

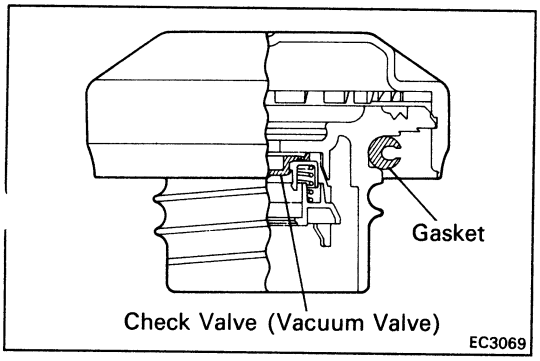

3. **VISUALLY INSPECT FUEL TANK CAP**
   Check if the cap and/or gasket are deformed or damaged.
   If necessary, repair or replace the cap.

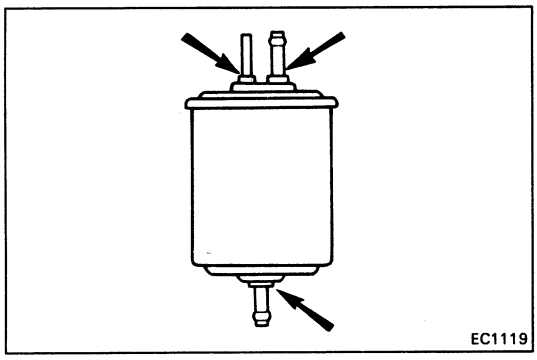

INSPECTION OF CHARCOAL CANISTER

1. **REMOVE CHARCOAL CANISTER**

2. **VISUALLY INSPECT CHARCOAL CANISTER**

   Look for cracks or damage.

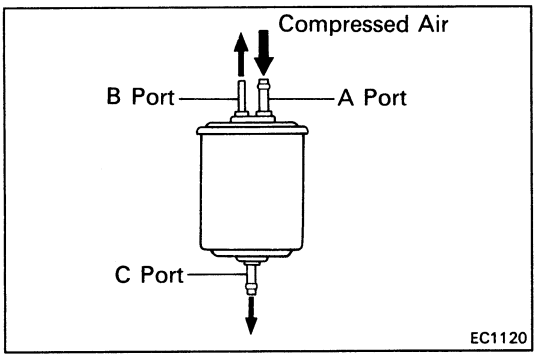

3. **CHECK FOR CLOGGED FILTER AND STUCK CHECK VALVE**

   (a) Using low pressure compressed air, blow into the A port and check that air flows without resistance from the other ports.

   (b) Blow into the B port and check that air does not flow from the other ports.

   If a problem is found, replace the charcoal canister.

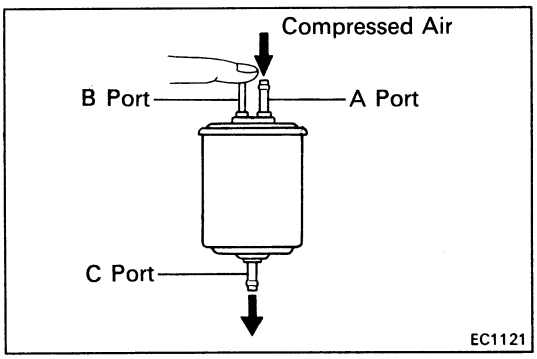

4. **CLEAN FILTER IN CANISTER**

   Clean the filter by blowing 3 kg/cm^2 (43 psi, 294 kPa) of compressed air into the A port while holding the B port closed.

   NOTICE:
   - **Do not attempt to wash the canister.**
   - **No activated carbon should come out.**

5. **REINSTALL CHARCOAL CANISTER**

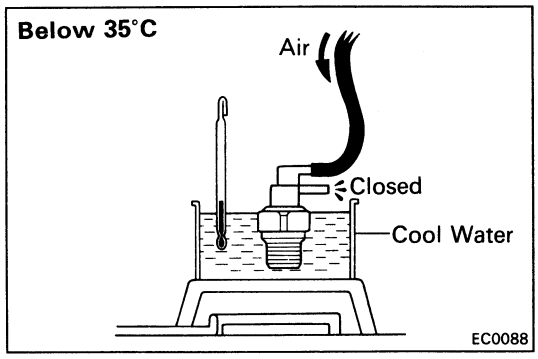

INSPECTION OF BVSV

CHECK BVSV BY BLOWING AIR INTO PIPE

(a) Drain the coolant from the radiator into a suitable container.

(b) Remove the BVSV from the water outlet.

(c) Cool the BVSV to below 35°C (95°F) with cool water.

(d) Blow air into a pipe and check that the BVSV is closed.

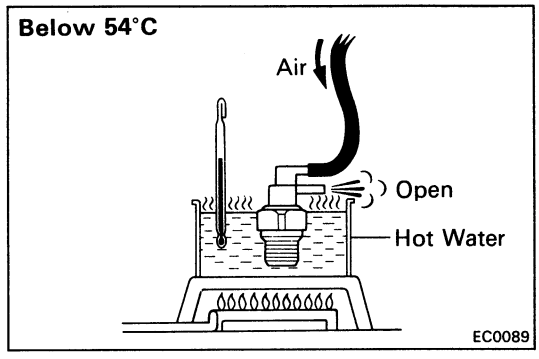

(e) Heat the BVSV to above 54°C (129°F) with hot water.

(f) Blow air into a pipe and check that the BVSV is open.

If a problem is found, replace the BVSV.

(g) Apply adhesive to two or three threads of the BVSV, and reinstall.

Adhesive: Part No. 08833-00070, THREE BOND 1324 or equivalent

(h) Refill the radiator with coolant.

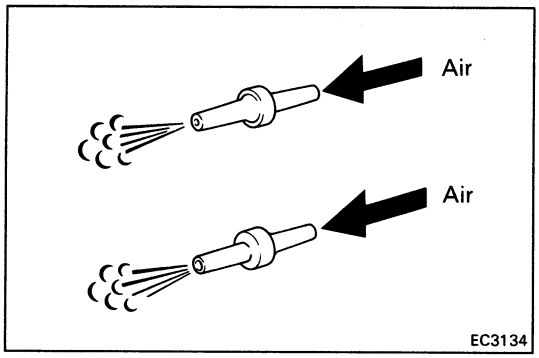

INSPECTION OF JET

1. **INSPECT JET BY BLOWING AIR FROM EACH SIDE**
   Check for stoppage.

EXHAUST GAS RECIRCULATION (EGR) SYSTEM

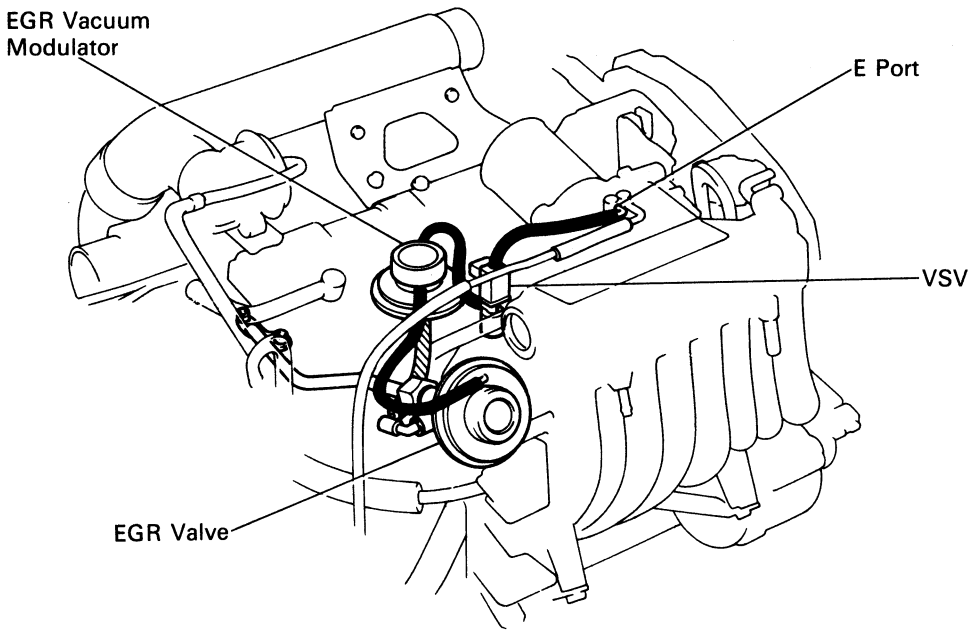

EC4041

(1)

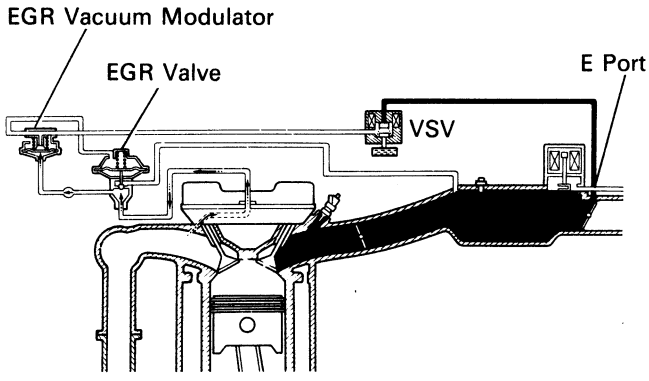

EC2834

(2)

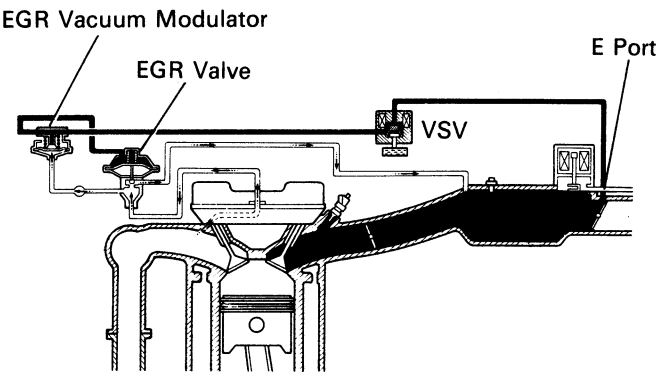

EC2833

To reduce NOx emissions, part of the exhaust gases are recirculated through the EGR valve to the intake manifold to lower the maximum combustion temperature.

Coolant temp.	VSV	Throttle Valve Opening Angle	Pressure in the EGR Valve Pressure Chamber		EGR Vacuum Modulator	EGR Valve	Exhaust Gas
Below 54°C (129°F)	CLOSED	–	–		–	CLOSED	Not recirculated
Above 60°C (140°F)	OPEN	Positioned above E port	(1)	–	–	CLOSED	Not recirculated
		Positioned below E port	(2)	*	CLOSED passage to atmosphere	OPEN	Recirculated (increase)

Remarks: * When the throttle valve is positioned above the E port, the EGR vacuum modulator will close the atmosphere passage and open the EGR valve to increase the EGR gas, even if the exhaust pressure is insufficiently low.

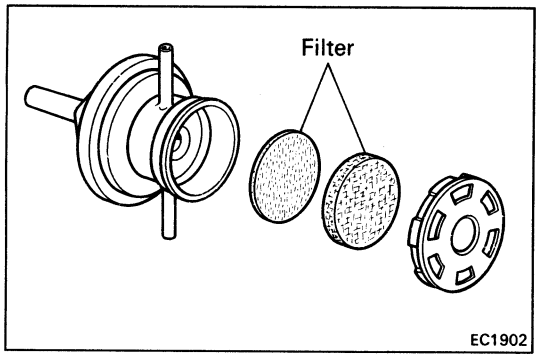

INSPECTION OF EGR SYSTEM

1. CHECK AND CLEAN FILTERS IN EGR VACUUM MODULATOR

(a) Check the filters for contamination or damage.

(b) Using compressed air, clean the filters.

HINT: Install the filters with the coarser surface facing the atmospheric side (outward).

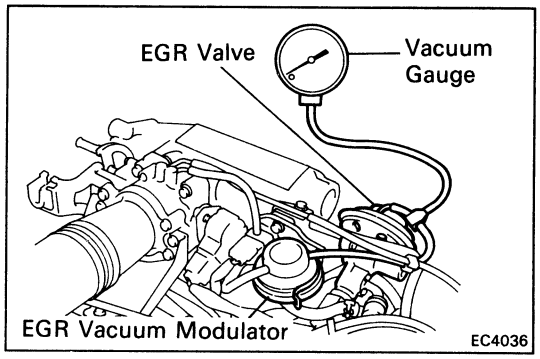

2. PREPARATION

Using a 3-way connector, connect a vacuum gauge to the hose between the EGR valve and vacuum modulator.

3. CHECK SEATING OF EGR VALVE

Start the engine and check that the engine starts and runs at idle.

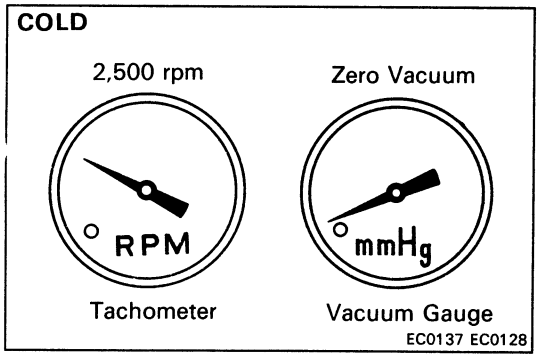

4. CHECK VSV WITH COLD ENGINE

(a) The coolant temperature should be below 54°C (129°F).

(b) Check that the vacuum gauge indicates zero vacuum at 2,500 rpm.

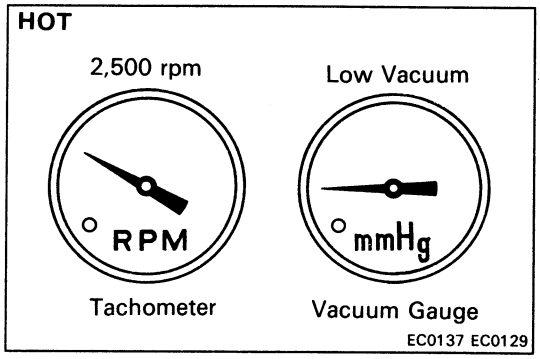

5. CHECK VSV WITH HOT ENGINE

(a) Warm up the engine.

(b) Check that the vacuum gauge indicates low vacuum at 2,500 rpm.

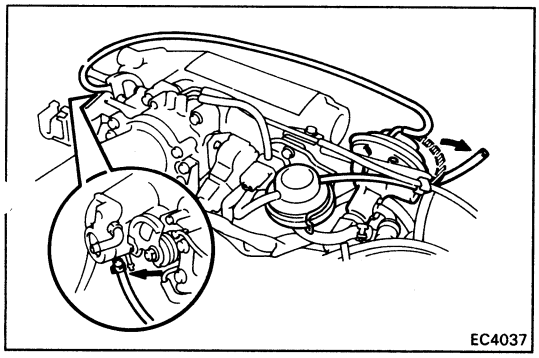

6. CHECK EGR VALVE

(a) Apply vacuum directly to the EGR valve with the engine idling.

(b) Check that the engine runs rough or dies.

(c) Reconnect the vacuum hoses to the proper locations.

IF NO PROBLEM IS FOUND WITH THIS INSPECTION, SYSTEM IS NORMAL; OTHERWISE INSPECT EACH PART

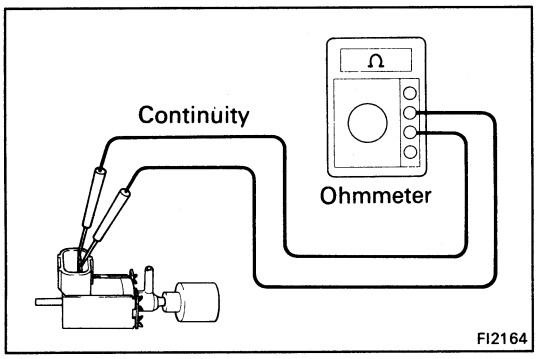

INSPECTION OF VSV

1. CHECK VSV FOR OPEN CIRCUIT

Using an ohmmeter, check that there is conitnuity between the terminals.

Resistance (Cold): 33 – 39 Ω

If there is no continuity, replace the VSV.

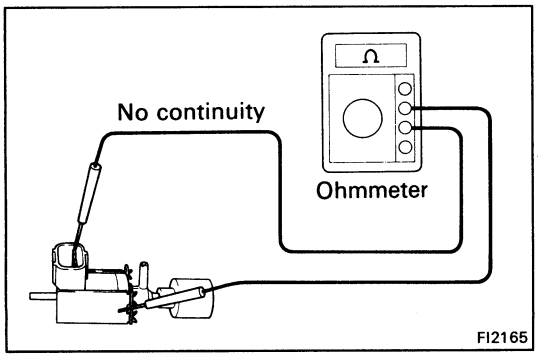

2. CHECK VSV FOR GROUND

Using an ohmmeter, check that there is no conitnuity between each terminal and the body.

If there is continuity, replace the VSV.

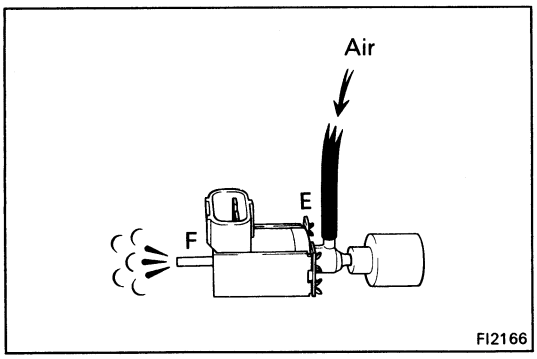

3. CHECK VSV OPERATION

(a) Check that air flows from ports E to F.

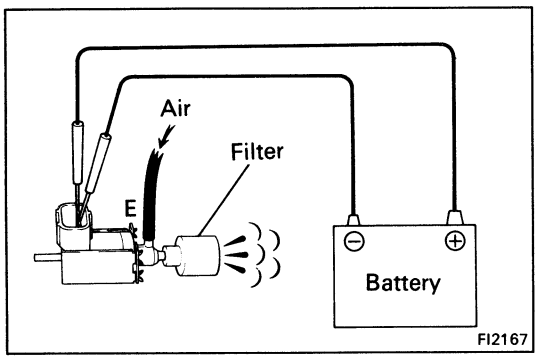

(b) Apply battery voltage across the terminals.

(c) Check that air flows from port E to the filter.

If operation is not as specified, replace the VSV.

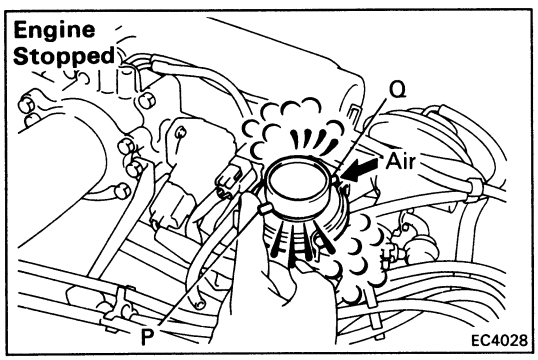

INSPECTION OF EGR VACUUM MODULATOR

CHECK EGR VACUUM MODULATOR OPERATION

(a) Disconnect the vacuum hoses from ports P and Q of the EGR vacuum modulator.

(b) Block port one side with your finger.

(c) Blow air into another port, and check that the air passes through to the air filter side freely.

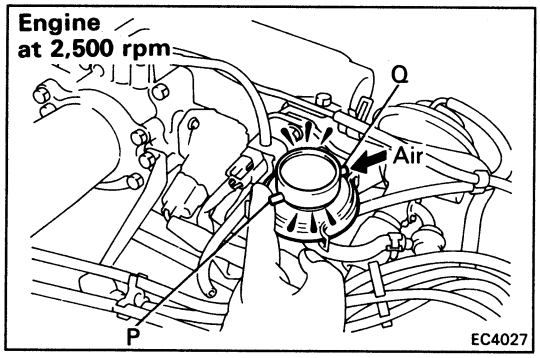

(d) Start the engine, and maintain speed at 2,500 rpm.

(e) Repeat the above test. Check that there is a strong resistance to air flow.

(f) Reconnect the vacuum hoses to the proper locations.

INSPECTION OF EGR VALVE

1. REMOVE EGR VALVE

Check for sticking and heavy carbon deposits.

If a problem is found, replace the valve.

2. REINSTALL EGR VALVE

Install a new gasket.

THREE-WAY CATALYST (TWC) SYSTEM

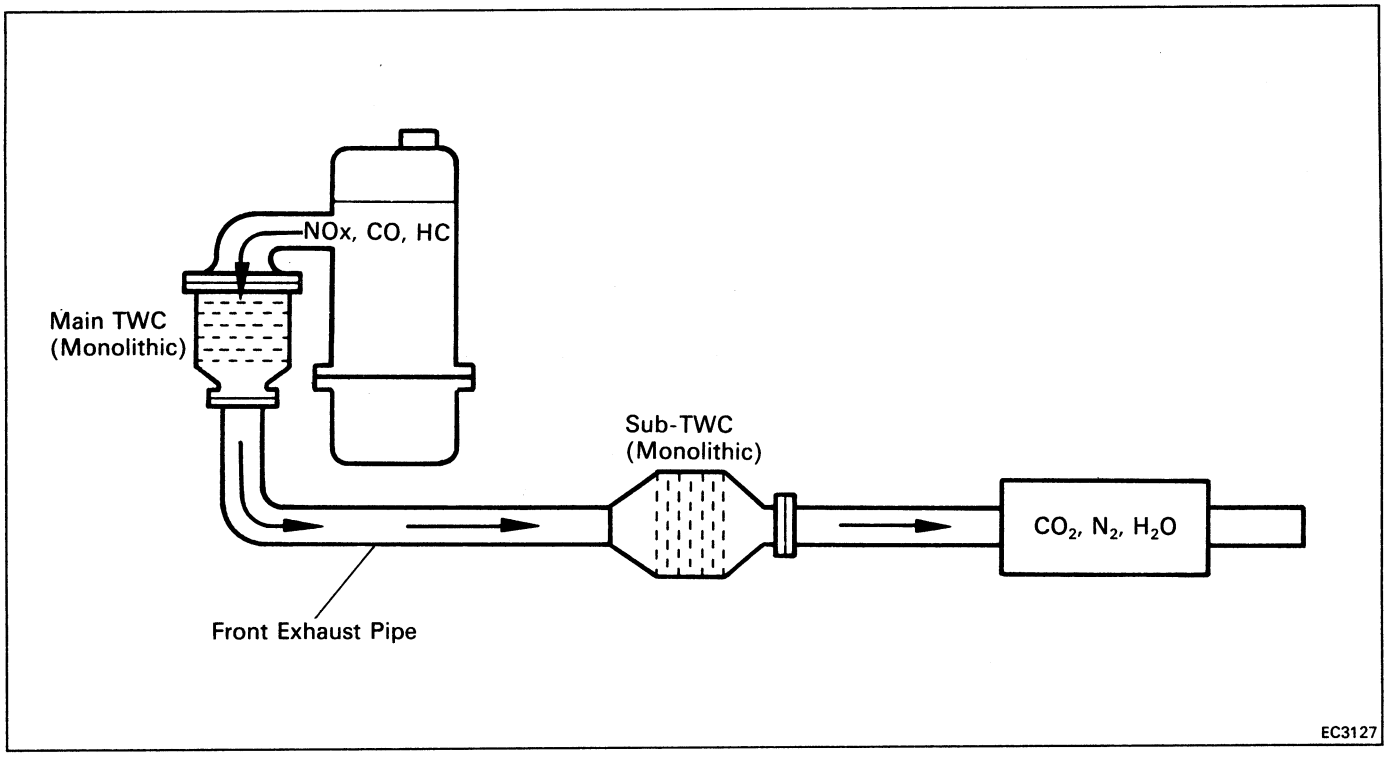

To reduce HC, CO and NOx emissions, they are oxidized, reduced and converted to nitrogen (N_2), carbon dioxide (CO_2) and water (H_2O) by the catalyst.

Exhaust Port		Main TWC		Sub-TWC		Exhaust Gas
HC, CO AND NOx	⇨	OXIDATION AND REDUCTION	⇨	OXIDATION AND REDUCTION	⇨	CO_2 H_2O N_2

INSPECTION OF EXHAUST PIPE ASSEMBLY

1. **CHECK CONNECTIONS FOR LOOSENESS OR DAMAGE**
2. **CHECK CLAMPS FOR WEAKNESS, CRACKS OR DAMAGE**

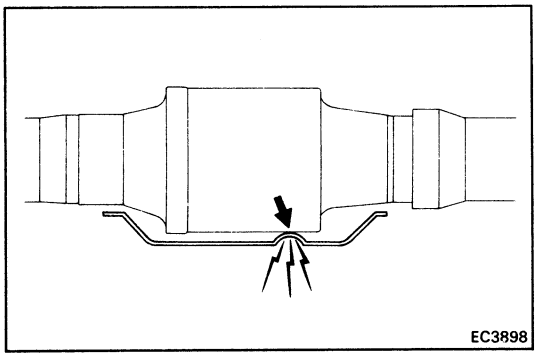

INSPECTION OF CATALYTIC CONVERTER (Sub-Catalytic Converter)

CHECK FOR DENTS OR DAMAGE

If any part of protector is damaged or dented to the extent that it contacts the converter, repair or replace it.

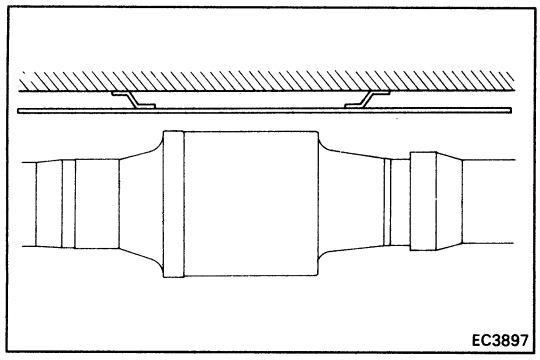
EC3897

INSPECTION OF HEAT INSULATOR

(Sub-Catalytic Converter)

1. CHECK HEAT INSULATOR FOR DAMAGE
2. CHECK FOR ADEQUATE CLEARANCE BETWEEN CATALYTIC CONVERTER AND HEAT INSULATOR

REPLACEMENT OF CATALYTIC CONVERTERS

(Main Catalytic Converter)

1. DISCONNECT CABLE FROM NEGATIVE TERMINAL OF BATTERY

   CAUTION: Work must be started after approx. 20 seconds or longer from the time the ignition switch is turned to the "LOCK" position and the negative (–) terminal cable is disconnected from the battery.

2. REMOVE ENGINE UNDER COVERS
3. REMOVE NO.1 AND NO.2 AIR INTAKE CONNECTORS
   (See steps 10 and 11 on page EM-134)
4. REMOVE TAILPIPE
   (See step 1 on page EC-15)
5. REMOVE FRONT EXHAUST PIPE
   (See step 2 on page EC-16)
6. REMOVE IDLER PULLEY BRACKET AND A/C COMPRESSOR WITHOUT DISCONNECTING HOSES
   (See step 33 on pages EM-139 and 140)
7. REMOVE MAIN CATALYTIC CONVERTER
   (a) Check that the converter is cool.
   (b) Remove the four bolts and RH converter stay.

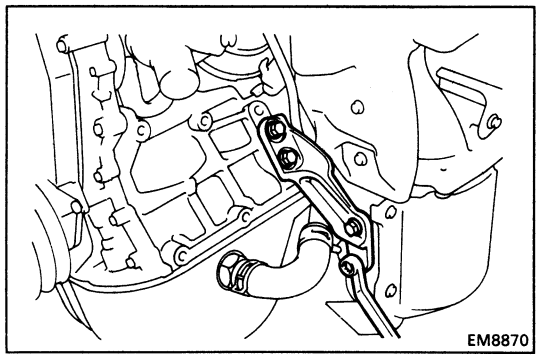
EM8870

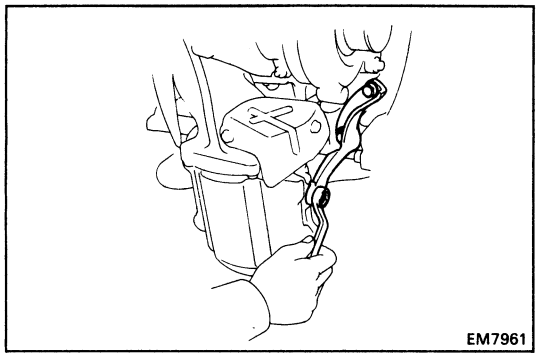
EM7961

(c) Remove the three bolts and LH converter stay.

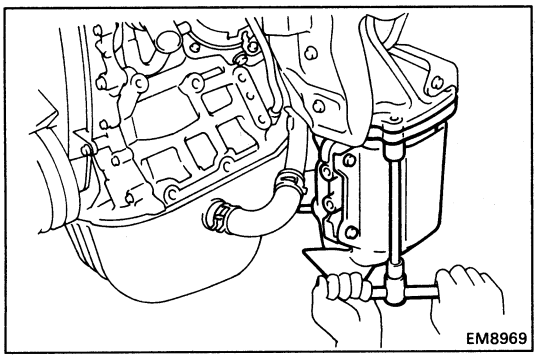

(d) Remove the three bolts, two nuts, converter, gasket, retainer and cushion.

(e) Remove the nine bolts and two heat insulator from the converter.

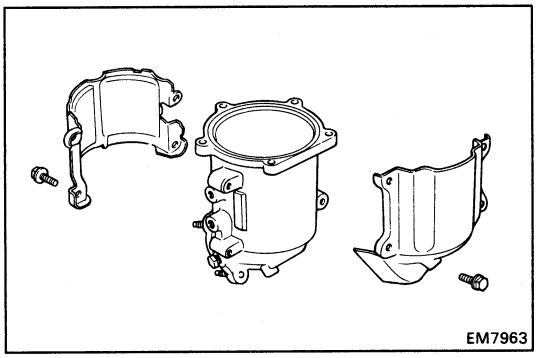

8. REINSTALL MAIN CATALYTIC CONVERTER

(a) Install the two heat insulators to a new converter with the nine bolts.

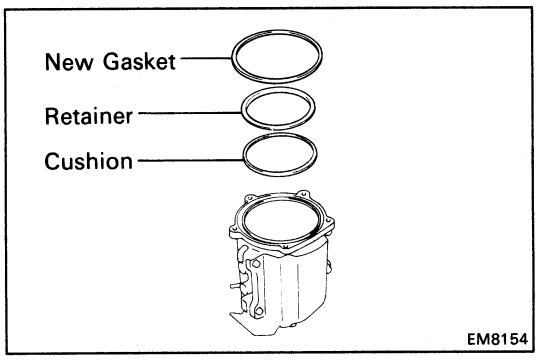

(b) Place the cushion, retainer and a new gasket on the converter.

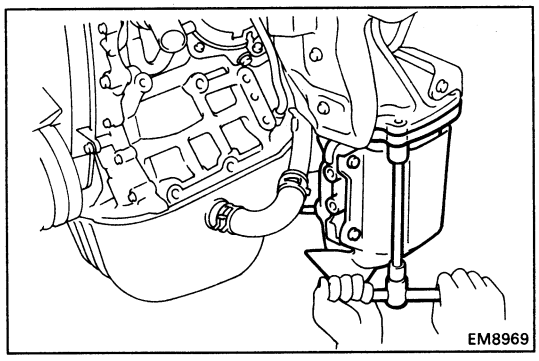

(c) Install the converter with the three bolts and two new nuts.

Torque: 300 kg-cm (21 ft-lb, 29 N·m)

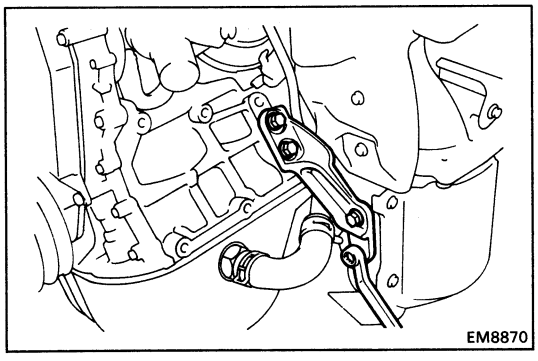

(d) Install the RH converter stay with the four bolts.

Torque: 600 kg-cm (43 ft-lb, 59 N·m)

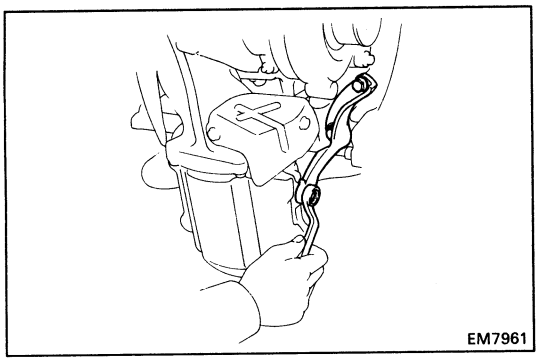
EM7961

(e) Install the LH converter stay with the three bolts.

Torque: 600 kg-cm (43 ft-lb, 59 N·m)

9. **REINSTALL IDLER PULLEY BRACKET AND A/C COMPRESSOR WITHOUT DISCONNECTING HOSES (See step 16 on pages EM-173 and 174)**

10. **REINSTALL FRONT EXHAUST PIPE (See step 3 on page EC-17)**

11. **REINSTALL TAILPIPE (See step 4 on page EC-18)**

12. **REINSTALL NO.1 AND NO.2 AIR INTAKE CONNECTORS (See steps 38 and 39 on page EM-179)**

13. **REINSTALL ENGINE UNDER COVERS**

14. **CONNECT CABLE TO NEGATIVE TERMINAL OF BATTERY**

(Sub-Catalytic Converter)

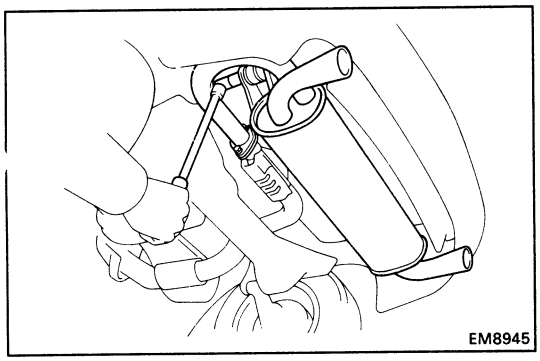
EM8945

1. **REMOVE TAILPIPE**

(a) Remove the two bolts holding the front exhaust pipe to the tailpipe stopper bracket.

(b) Remove the two bolts holding the front exhaust pipe to the tailpipe. Remove the gasket.

(c) Remove the two through bolts and tailpipe.

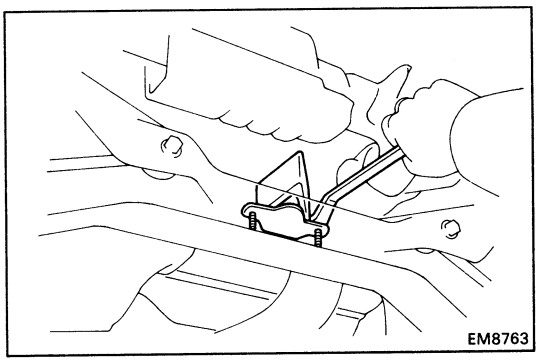
EM8763

2. **REMOVE FRONT EXHAUST PIPE (SUB-CATALYTIC CONVERTER)**

(a) Remove the two bolts and damper.

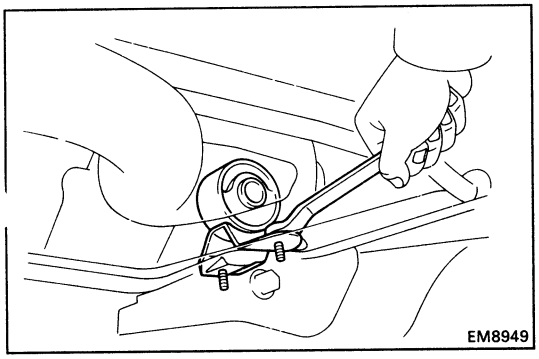
EM8949

(b) Remove the two bolts and support bracket.

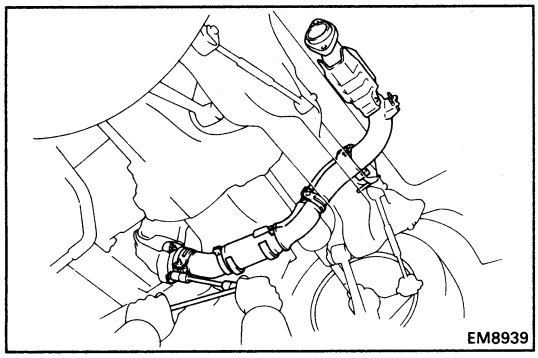
EM8939

(c) Using a 14 mm deep socket wrench, remove the three nuts, front exhaust pipe and gasket.

HINT: Passing the exhaust pipe rear side between the body and suspension crossmember is not easy, so follow the method in the illustration.

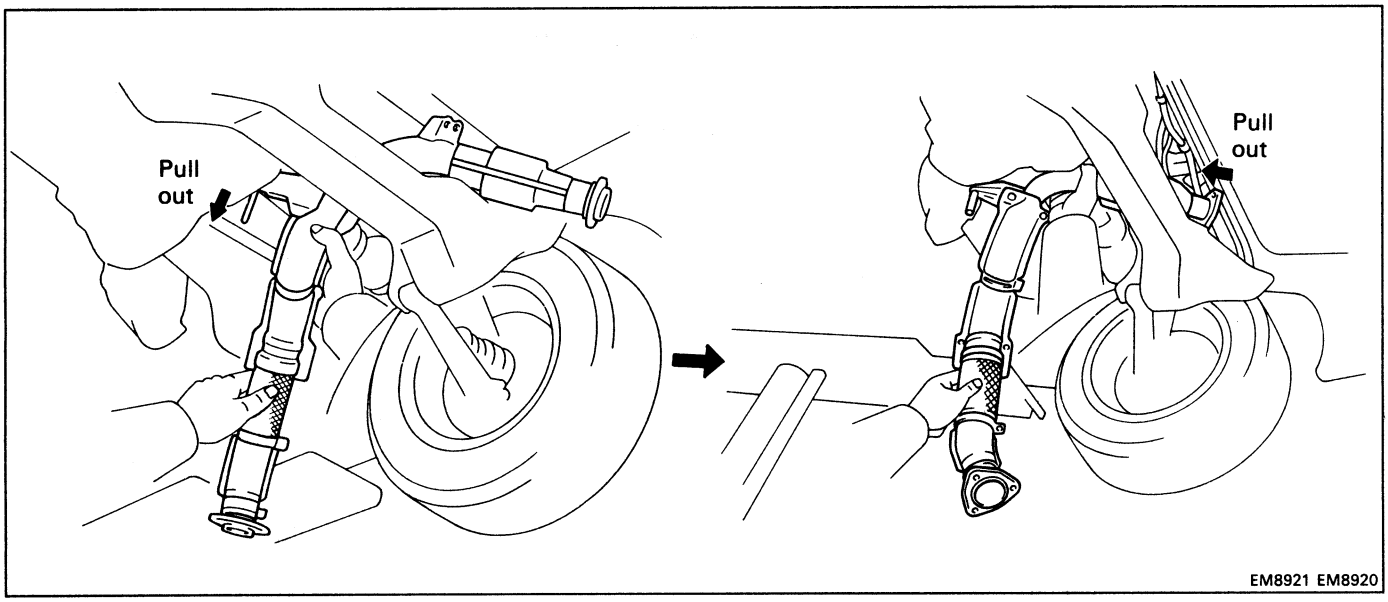

EM8921 EM8920

3. REINSTALL FRONT EXHAUST PIPE (SUB-CATALYTIC CONVERTER)

HINT: Passing the exhaust pipe rear side between the body and suspension crossmember is not easy, so follow the method in the illustration.

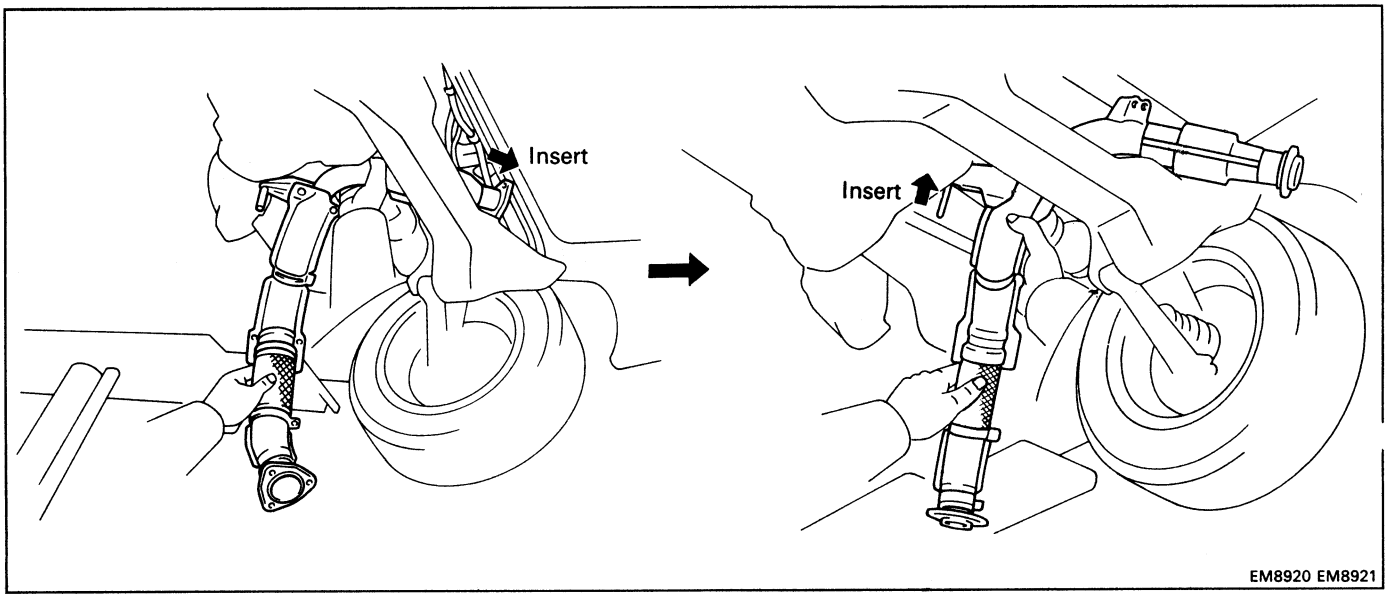

EM8920 EM8921

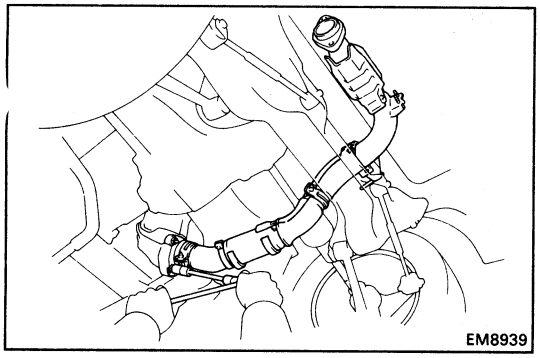

(a) Place a new gasket on the front of the front exhaust pipe.

(b) Using a 14 mm deep socket wrench, install the front exhaust pipe with three new nuts.

Torque: 630 kg-cm (46 ft-lb, 62 N·m)

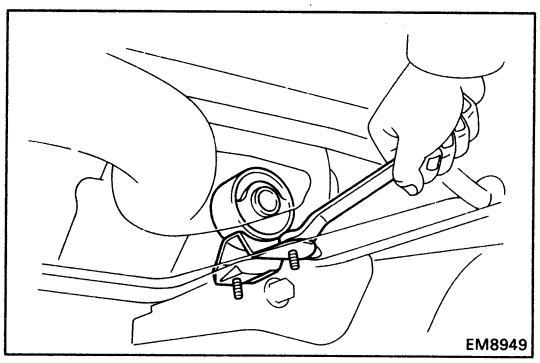

(c) Install the support bracket with the two bolts.

Torque: 210 kg-cm (15 ft-lb, 21 N·m)

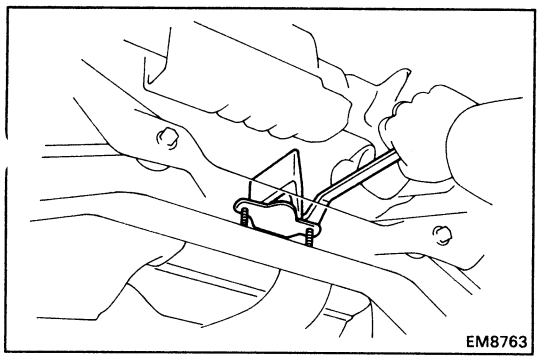

(d) Install the damper with the two bolts.

Torque: 210 kg-cm (15 ft-lb, 21 N·m)

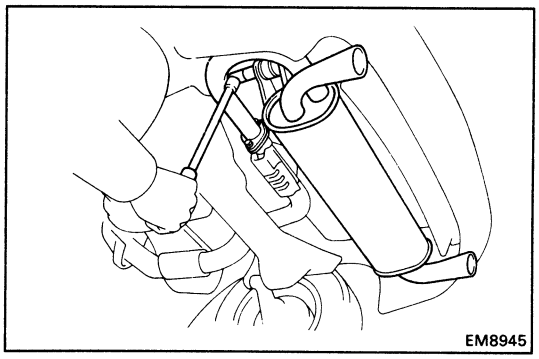

4. INSTALL TAILPIPE

(a) Install the tailpipe with the two through bolts.

Torque: 670 kg-cm (48 ft-lb, 66 N·m)

(b) Place a new gasket between the exhaust pipe and tailpipe.

(c) Temporarily install the two bolts holding the front exhaust pipe to the tailpipe.

(d) Install the two bolts holding the stopper bracket of the front exhaust pipe to the tailpipe stopper bracket.

Torque: 190 kg-cm (14 ft-lb, 19 N·m)

(e) Tighten the two bolts holding the front exhaust pipe to the tail pipe.

Torque: 440 kg-cm (32 ft-lb, 43 N·m)

SYSTEM PURPOSE

System	Abbreviation	Purpose
Positive Crankcase ventilation	PCV	Reduces blow-by gas (HC)
Fuel evaporative emission control	EVAP	Reduces evaporative HC
Exhaust gas recirculation	EGR	Reduces NOx
Three-way catalyst	TWC	Reduces HC, CO and NOx
Electronic fuel injection*	EFI	Regulates all engine conditions for reduction of exhaust emissions.

Remarks * For inspection and repair of the EFI system, refer to EFI section of this manual.

COMPONENT LAYOUT AND SCHEMATIC DRAWING

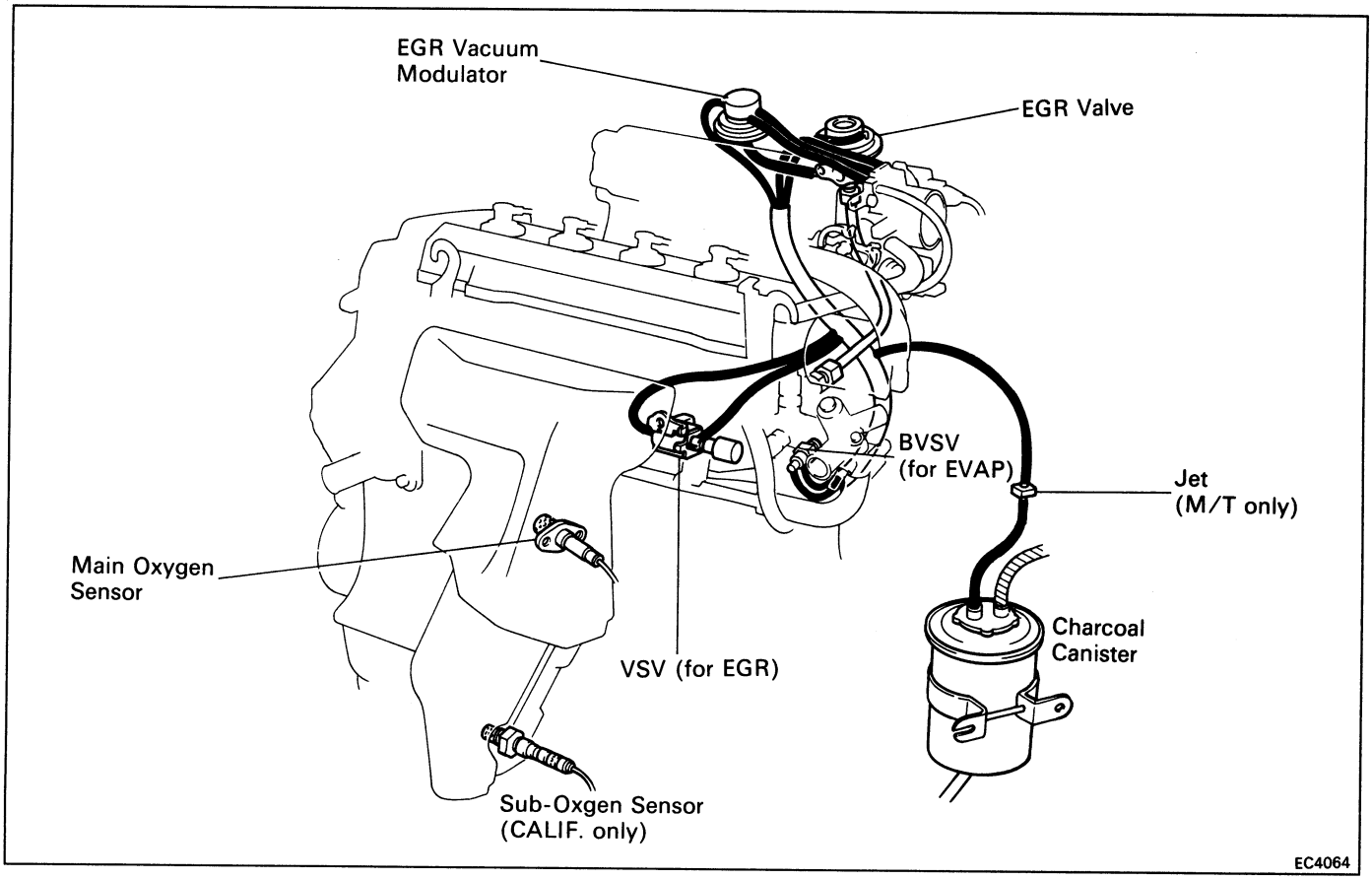

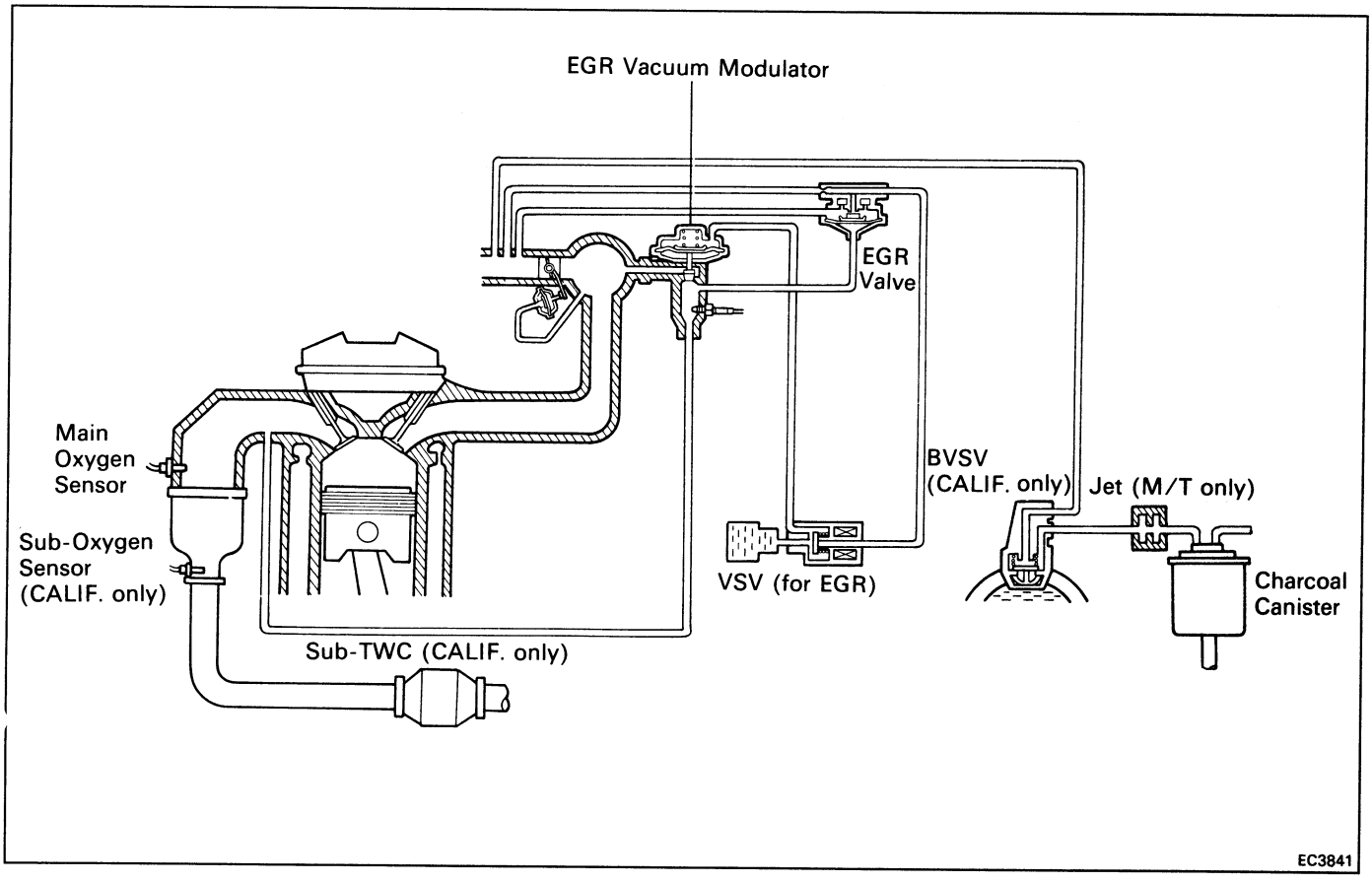

POSITIVE CRANKCASE VENTILATION (PCV) SYSTEM

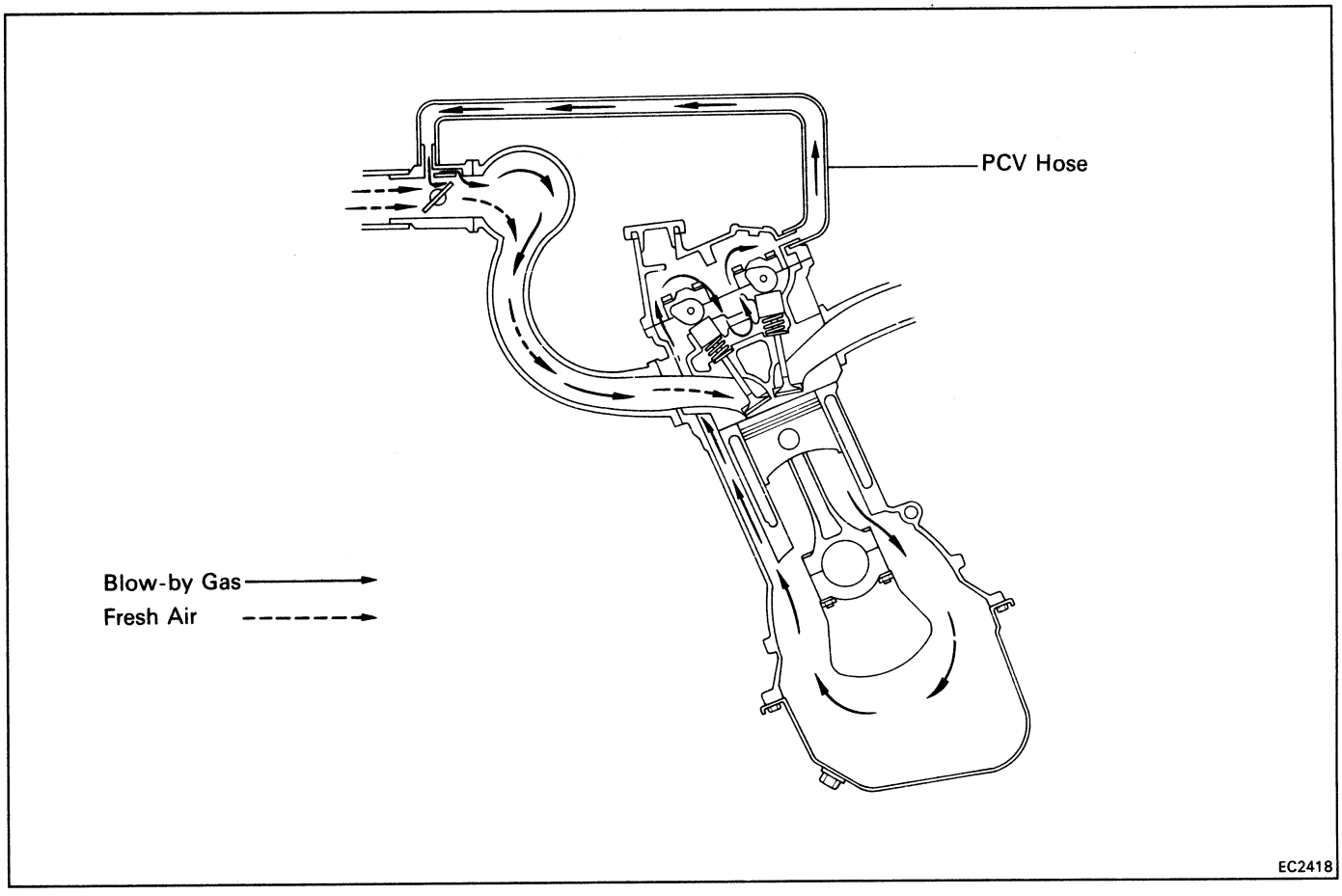

To reduse HC emission, crankcase blow-by gas (HC) is routed to the intake manifold for combustion in the cylinders.

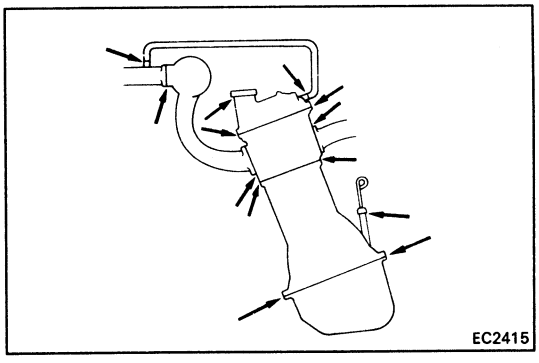

INSPECTION OF PCV HOSE AND CONNECTIONS

VISUALLY INSPECT HOSE AND CONNECTIONS

Check for cracks, leaks or damage.

FUEL EVAPORATIVE EMISSION CONTROL (EVAP) SYSTEM

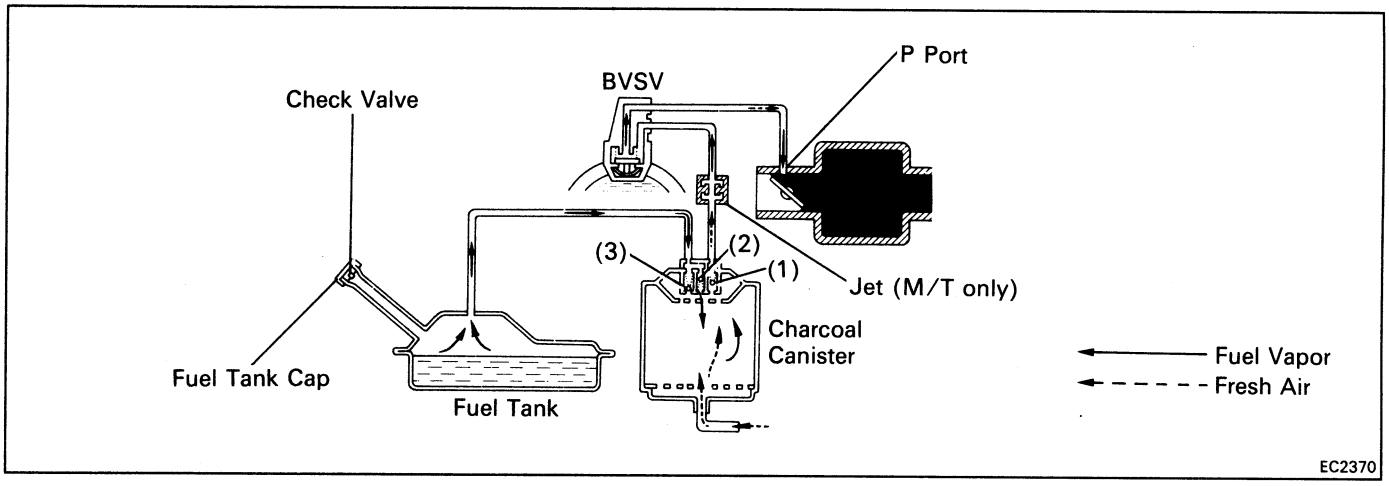

To reduce HC emission, evaporated fuel from the fuel tank is routed through the charcoal canister to the intake manifold for combustion in the cylinders.

Coolant Temp.	BVSV	Throttle Valve Opening	Canister Check Valve (1)	Canister Check Valve (2)	Canister Check Valve (3)	Check Valve in Cap	Evaporated Fuel (HC)
Below 35°C (95°F)	CLOSED	–	–	–	–	–	HC from tank is absorbed into the canister.
Above 54°C (129°F)	OPEN	Positioned below P Port	CLOSED	–	–	–	
		Positioned above P Port	OPEN	–	–	–	HC from canister is led into air intake canister.
High pressure in tank	–	–	–	OPEN	CLOSED	CLOSED	HC from tank is absorbed into the canister.
High vacuum intake	–	–	–	CLOSED	OPEN	OPEN	Air is led into the fuel tank.

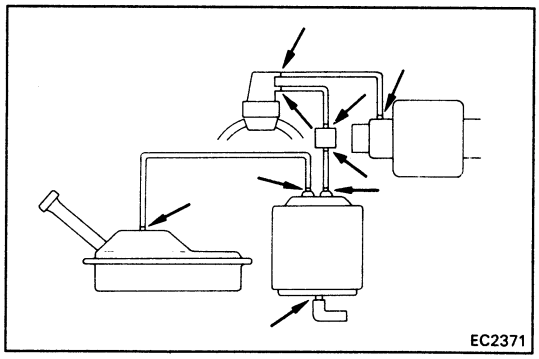

INSPECTION OF FUEL VAPOR LINES, FUEL TANK AND TANK CAP

1. **VISUALLY INSPECT LINES AND CONNECTIONS**

   Look for loose connections, sharp bends or damage.

2. **VISUALLY INSPECT FUEL TANK**

   Look for deformation, cracks or fuel leakage.

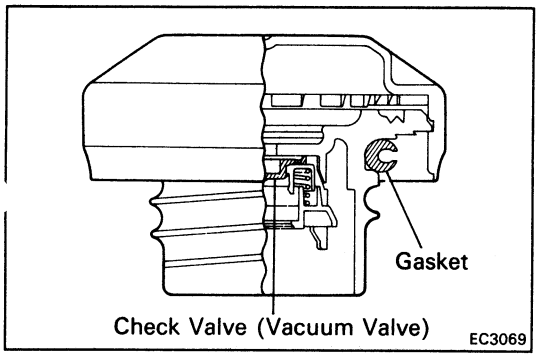

3. **VISUALLY INSPECT FUEL TANK CAP**

   Check if the cap and/or gasket are deformed or damaged.

   If necessary, repair or replace the cap.

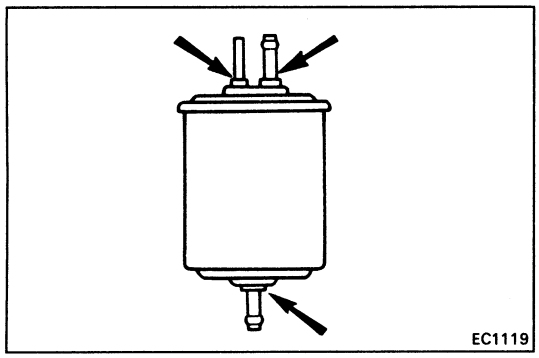

INSPECTION OF CHARCOAL CANISTER

1. **REMOVE CHARCOAL CANISTER**

2. **VISUALLY INSPECT CHARCOAL CANISTER**

Look for cracks or damage.

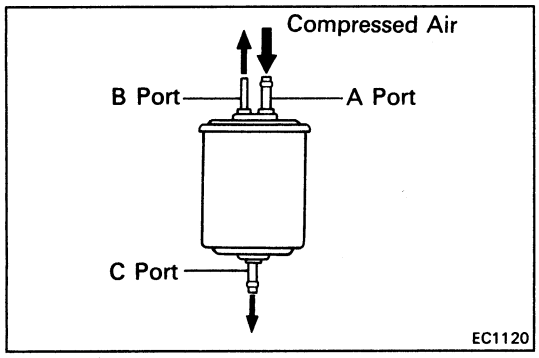

3. **CHECK FOR CLOGGED FILTER AND STUCK CHECK VALVE**

(a) Using low pressure compressed air, blow into the A port and check that air flows without resistance from the other ports.

(b) Blow into the B port and check that air does not flow from the other ports.

If a problem is found, replace the charcoal canister.

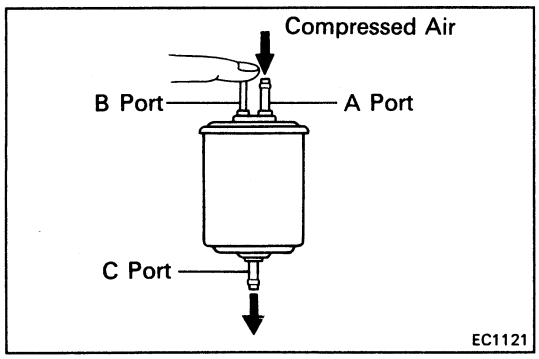

4. **CLEAN FILTER IN CANISTER**

Clean the filter by blowing 3 kg/cm^2 (43 psi, 294 kPa) of compressed air into the A port while holding the B port closed.

NOTICE:

- **Do not attempt to wash the canister.**
- **No activated carbon should come out.**

5. **REINSTALL CHARCOAL CANISTER**

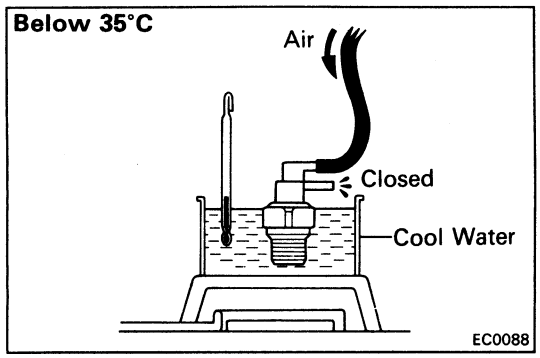

INSPECTION OF BVSV

CHECK BVSV BY BLOWING AIR INTO PIPE

(a) Drain the coolant from the radiator into a suitable container.

(b) Remove the BVSV from the water outlet.

(c) Cool the BVSV to below 35°C (95°F) with cool water.

(d) Blow air into a pipe and check that the BVSV is closed.

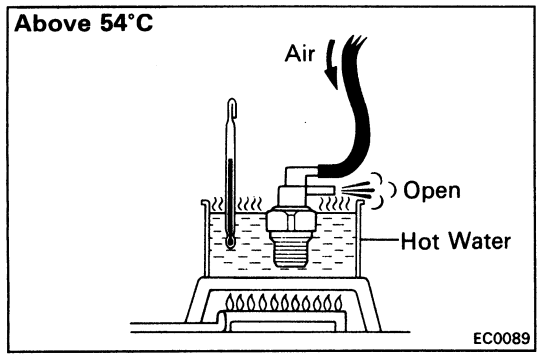

(e) Heat the BVSV to above 54°C (129°F) with hot water.

(f) Blow air into a pipe and check that the BVSV is open.

If a problem is found, replace the BVSV.

(g) Apply adhesive to two or three threads of the BVSV, and reinstall.

Adhesive: Part No. 08833-00070, THREE BOND 1324 or equivalent

(h) Refill the radiator with coolant.

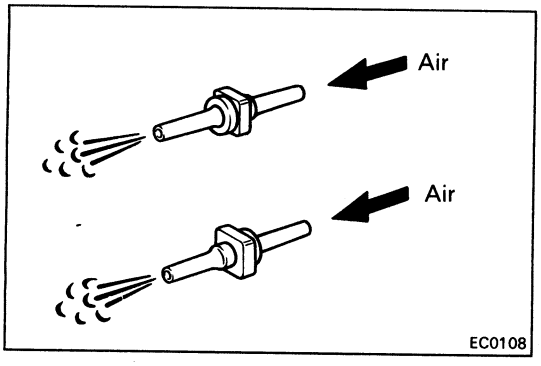

INSPECTION OF JET (M/T only)

1. **INSPECT JET BY BLOWING AIR FROM EACH SIDE**
   Check for stoppage.

EXHAUST GAS RECIRCULATION (EGR) SYSTEM

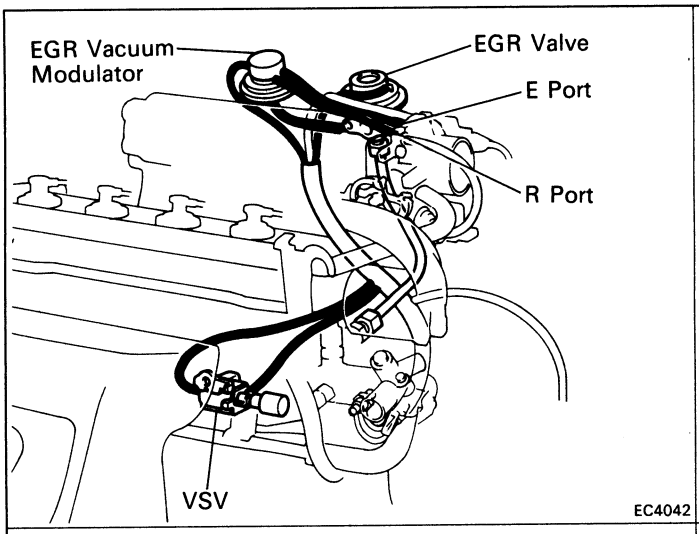

(1)

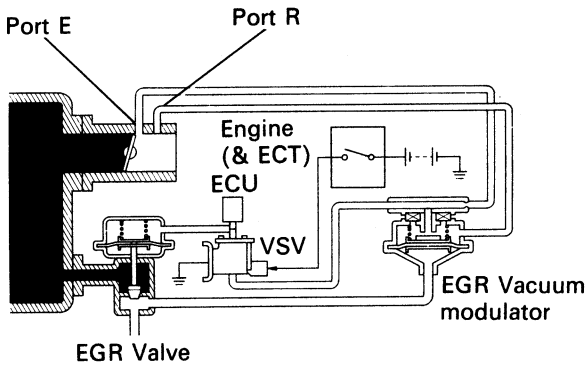

(2)

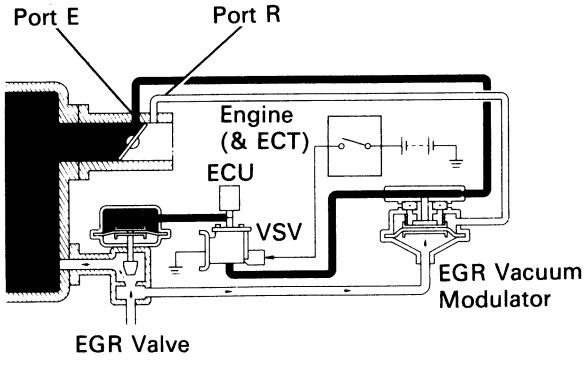

(3)

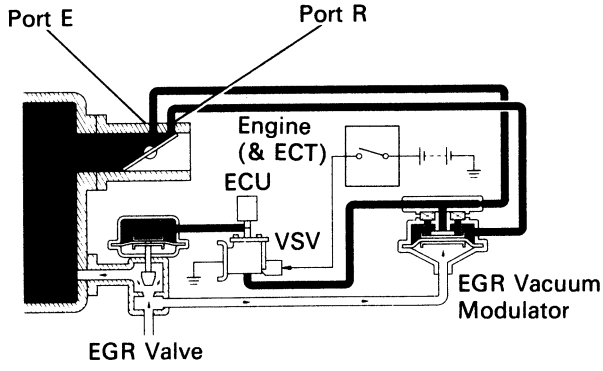

Coolant Temp.	Engine RPM	PIM (ECU)	VSV	Throttle Valve Opening Angle	Pressure in the EGR Valve Pressure Chamber		EGR Vacuum Modulator	EGR Valve	Exhaust Gas
Below 55°C (131°F)	–	–	CLOSED	–	–		–	CLOSED	Not recirculated
Above 60°C (140°F)	Below 4,000 rpm	OFF	CLOSED	Positioned below E port	–		–	CLOSED	Not recirculated
			CLOSED	positioned below E port	(1)	–	–	CLOSED	Not recirculated
		* * * ON	OPEN	Positioned between E port and R port	(2) HIGH	*	CLOSESpassage to atmosphere	OPEN	Recirculated
				Positioned above R port	(3) HIGH	* *	CLOSES passage to atmosphere	OPEN	Recirculated (increase)
	Above 4,000 rpm	OFF	CLOSED	–	–		–	CLOSED	Not Recirculated

* Pressure increase → Modulator closes → EGR valve opens → Pressure drops
→ EGR valve close ← Modulator opens ←

* * when the throttle valve is positioned above R port, the EGR vacuum modulator will close the atmosphere passage and open the EGR valve to increase the exhaust gas, even if the exhaust pressure is insufficiently low.

* * * If terminals TE1 and E1 of check connector are connected, the VSV switches ON.

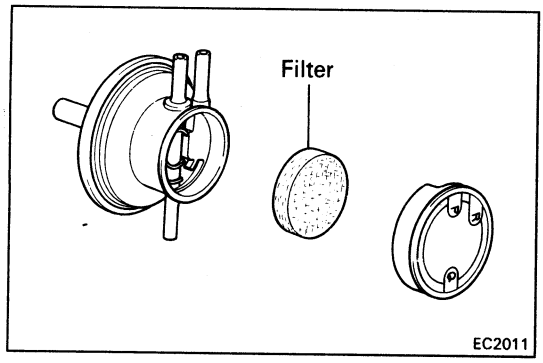

INSPECTION OF EGR SYSTEM

1. CHECK AND CLEAN FILTERS IN EGR VACUUM MODULATOR

(a) Check the filters for contamination or damage.

(b) Using compressed air, clean the filters.

HINT: Install the filters with the coarser surface facing the atmospheric side (outward).

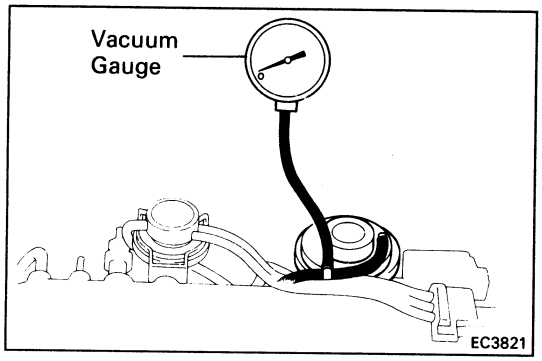

2. PREPARATION

Using a 3-way connector, connect a vacuum gauge to the hose between the EGR valve and VSV.

3. CHECK SEATING OF EGR VALVE

Start the engine and check that the engine starts and runs at idle.

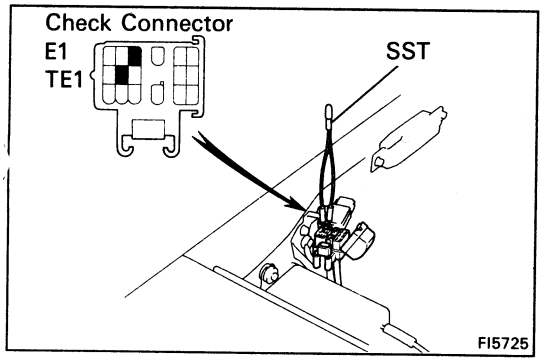

4. CONNECT TERMINALS TE1 AND E1

Using SST, connect the terminals TE1 and E1 of the check connector.

SST 09843-18020

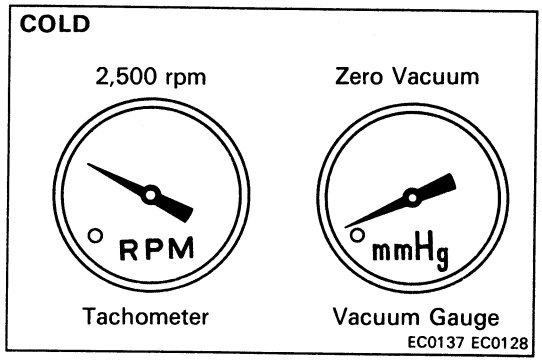

5. CHECK VSV

(a) The coolant temperature should be below 55°C (131°F).

(b) Check that the vacuum gauge indicates zero at 2,500 rpm.

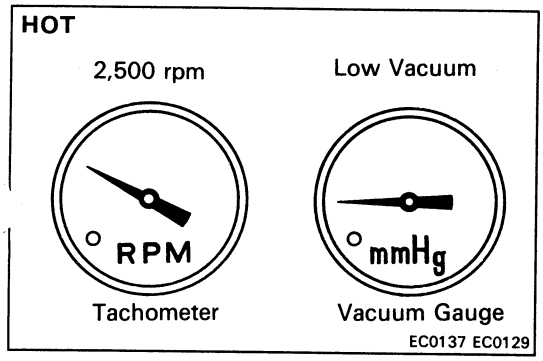

6. CHECK VSV AND EGR VACUUM MODULATOR WITH HOT ENGINE

(a) Warm up the engine.

(b) Check that the vacuum gauge indicates low vacuum at 2,500 rpm.

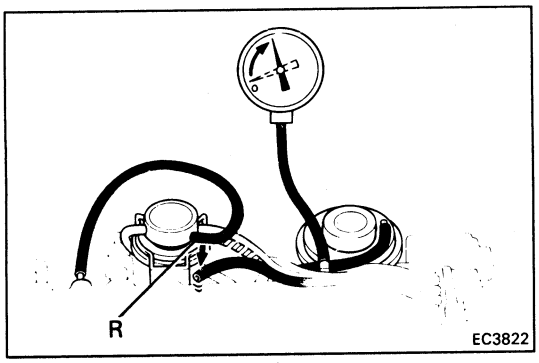

(c) Disconnect the vacuum hose R port of the EGR vacuum modulator and connect R port directly to the intake manifold with another hose.

(d) Check that the vacuum gauge indicates high vacuum at 2,500 rpm.

HINT: As a large amount of exhaust gas enters, the engine will misfire slightly.

(e) Remove the vacuum gauge, and reconnect the vacuum hoses to the proper locations.

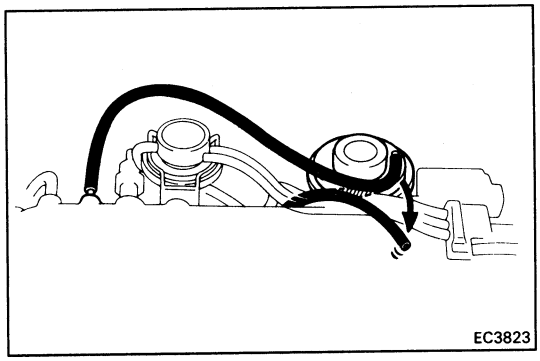

7. CHECK EGR VALVE

(a) Apply vacuum directly to the EGR valve with the engine idling.

(b) Check that the engine runs rough or dies.

(c) Reconnect the vacuum hoses to the proper locations.

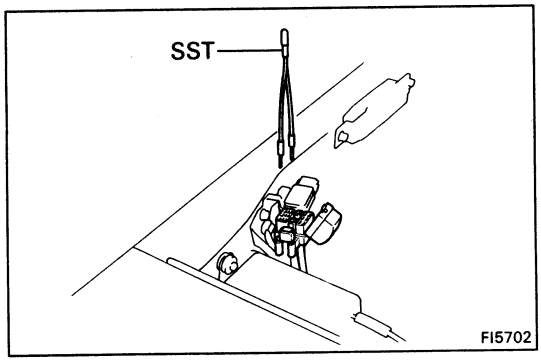

8. DISCONNECT TERMINALS TE1 AND E1

Remove the SST.

SST 09843-18020

IF NO PROBLEM IS FOUND WITH THIS INSPECTION, SYSTEM IS NORMAL; OTHERWISE INSPECT EACH PART

INSPECTION OF VSV

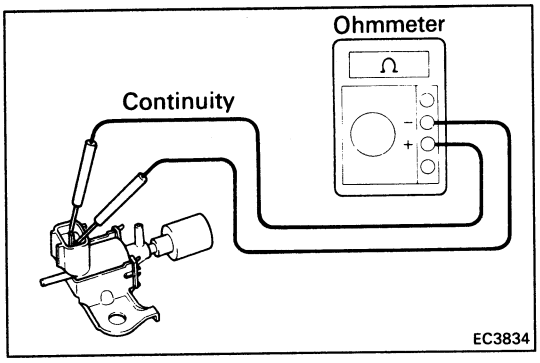

1. CHECK VSV FOR OPEN CIRCUIT

Using an ohmmeter, check that there is conitnuity between the terminals.

Resistance (Cold): 33 – 39 Ω

If there is no continuity, replace the VSV.

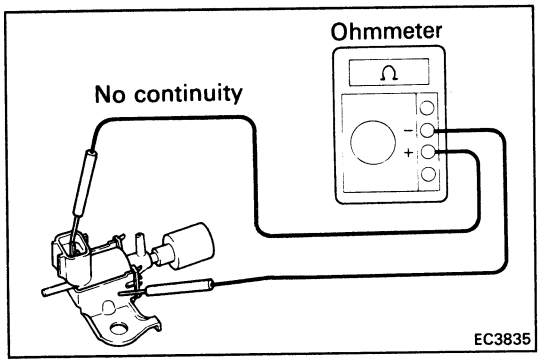

2. CHECK VSV FOR GROUND

Using an ohmmeter, check that there is no conitnuity between each terminal and the body.

If there is continuity, replace the VSV.

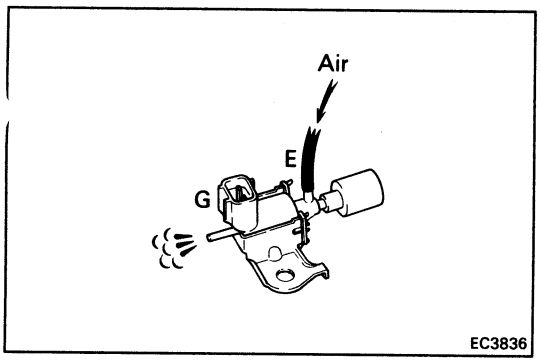

3. CHECK VSV OPERATION

(a) Check that air flows from ports E to G.

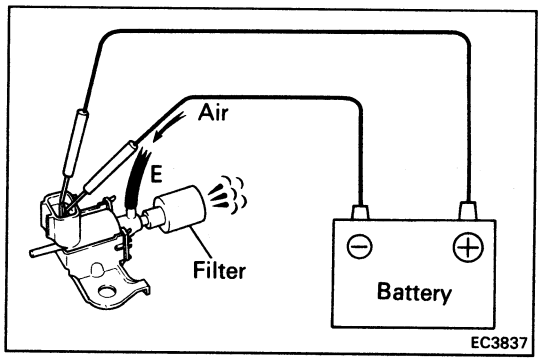

(b) Apply battery voltage across the terminals.

(c) Check that air flows from port E to the filter.

If operation is not as specified, replace the VSV.

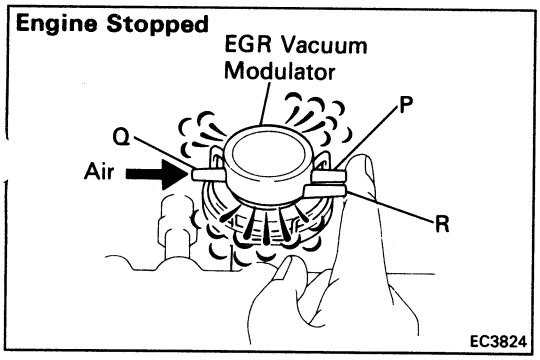

INSPECTION OF EGR VACUUM MODULATOR

CHECK EGR VACUUM MODULATOR OPERATION

(a) Disconnect the vacuum hoses from ports P, Q and R of the EGR vacuum modulator.

(b) Block ports P and R with your finger.

(c) Blow air into port Q, and check that the air passes through to the air filter side freely.

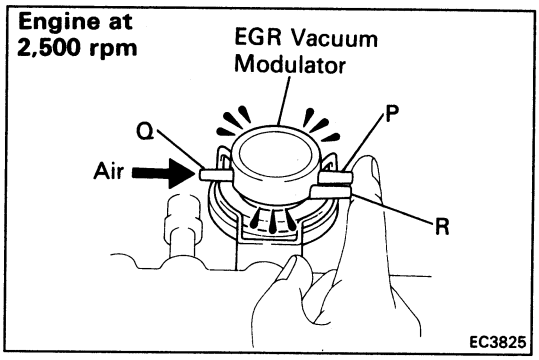

(d) Start the engine, and maintain speed at 2,500 rpm.

(e) Repeat the above test. Check that there is a strong resistance to air flow.

(f) Reconnect the vacuum hoses to the proper locations.

INSPECTION OF EGR VALVE

1. REMOVE EGR VALVE

Check for sticking and heavy carbon deposits.

If a problem is found, replace the valve.

2. REINSTALL EGR VALVE

Install a new gasket.

THREE-WAY CATALYST (TWC) SYSTEM

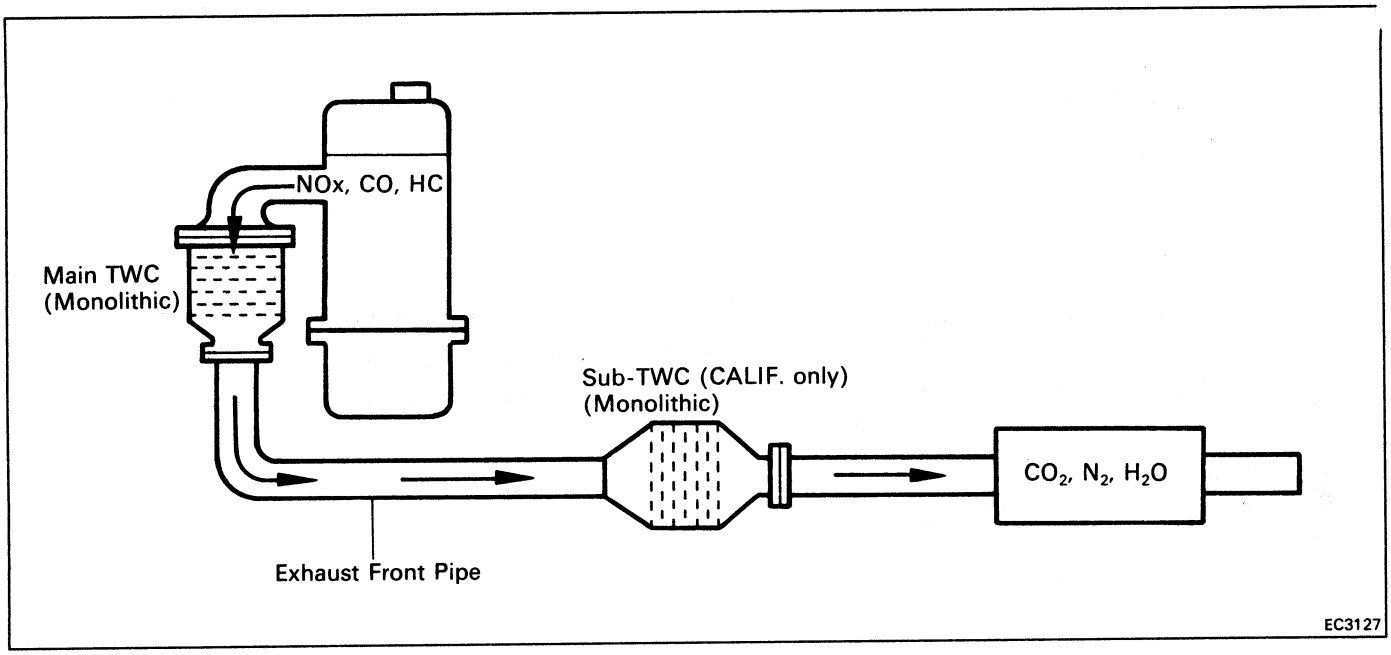

To reduce HC, CO and NOx emissions, they are oxidized, reduced and converted to nitrogen (N_2), carbon dioxide (CO_2) and water (H_2O) by the catalyst.

Exhaust Port		Main TWC		Sub-TWC (CALIF. only)		Exhaust Gas
HC, CO AND NOx	⇒	OXIDATION AND REDUCTION	⇒	OXIDATION AND REDUCTION	⇒	CO_2 H_2O N_2

INSPECTION OF EXHAUST PIPE ASSEMBLY

1. CHECK CONNECTIONS FOR LOOSENESS OR DAMAGE
2. CHECK CLAMPS FOR WEAKNESS, CRACKS OR DAMAGE

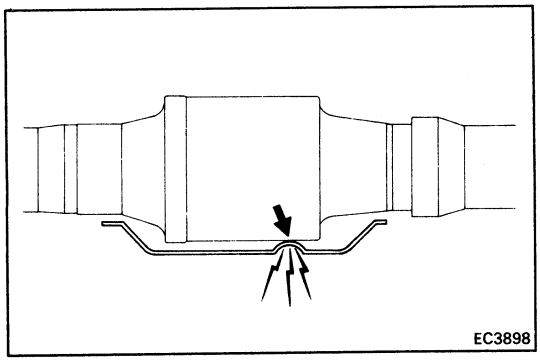

INSPECTION OF CATALYTIC CONVERTER (Sub-Catalytic Converter (CALIF. only))

CHECK FOR DENTS OR DAMAGE

If any part of protector is damaged or dented to the extent that it contacts the converter, repair or replace it.

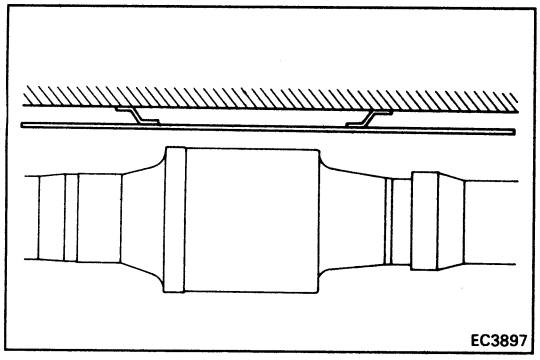
EC3897

INSPECTION OF HEAT INSULATOR

(Sub-Catalytic Converter (CALIF. only))

1. CHECK HEAT INSULATOR FOR DAMAGE
2. CHECK FOR ADEQUATE CLEARANCE BETWEEN CATALYTIC CONVERTER AND HEAT INSULATOR

REPLACEMENT OF CATALYTIC CONVERTER(S)

(Main Catalytic Converter)

1. DISCONNECT CABLE FROM NEGATIVE TERMINAL OF BATTERY

   CAUTION: Work must be started after approx. 20 seconds or longer from the time the ignition switch is turned to the "LOCK" position and the negative (–) terminal cable is disconnected from the battery.

2. REMOVE ENGINE UNDER COVERS
3. REMOVE FRONT EXHAUST PIPE
   (See step 1 on page EC-31)
4. REMOVE MAIN CATALYTIC CONVERTER
   (a) Check that the converter is cool.
   (b) Disconnect the main oxygen sensor connector.
   (c) (CALIF. only)
   Disconnect the sub-oxygen sensor connector.

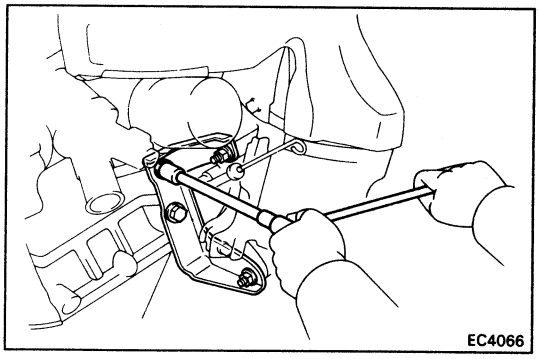
EC4066

(d) Remove the two bolts, two nuts and converter stay.

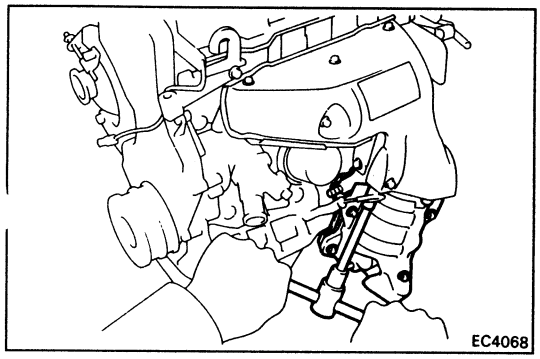
EC4068

(e) Remove the three bolts, two nuts, converter, gasket, retainer and cushion.
(f) Remove the eight bolts and two heat insulators from the converter.

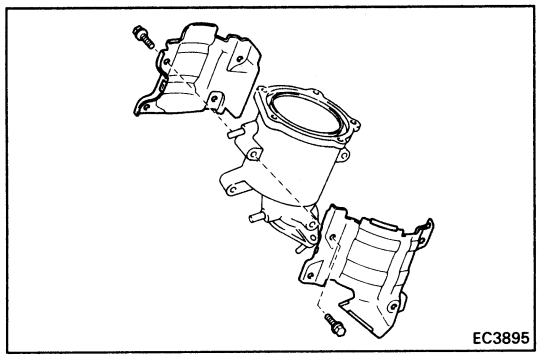
EC3895

5. REINSTALL MAIN CATALYTIC CONVERTER

(a) Install the two heat insulators to a new converter with the eight bolts.

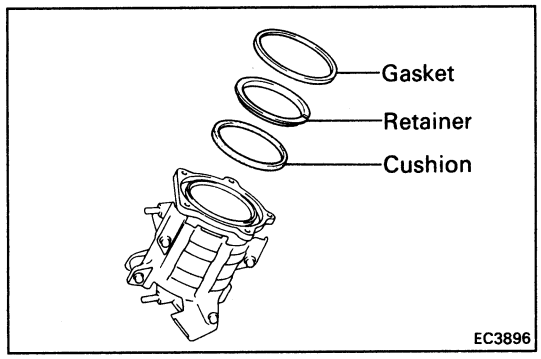

EC3896

(b) Place the cushion, retainer and a new gasket on the converter.

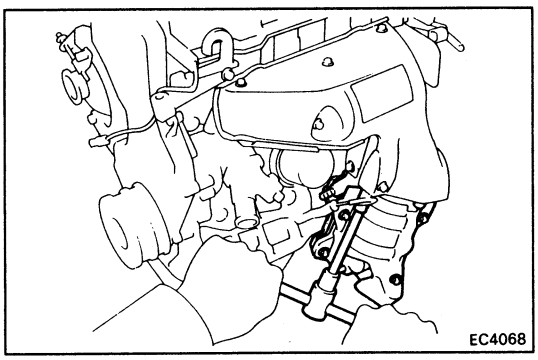
EC4068

(c) Install the converter with the three bolts and two new nuts.

Torque: 300 kg-cm (21 ft-lb, 29 N·m)

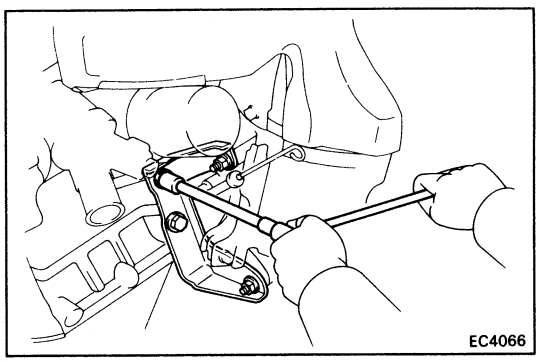
EC4066

(d) Install the converter stay with the two bolts and two nuts.

Torque: 425 kg-cm (31 ft-lb, 42 N·m)

(e) Connect the main oxygen sensor connector.

(f) (CALIF. only)
Connect the sub-oxygen sensor connector.

6. REINSTALL FRONT EXHAUST PIPE
(See step 2 on pages EC-32 and 33)

7. REINSTALL ENGINE UNDER COVERS

8. CONNECT CABLE TO NEGATIVE TERMINAL OF BATTERY

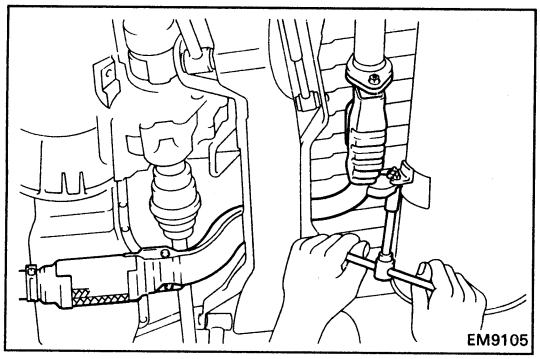

(Sub-Catalytic Converter (CALIF. only)

1. REMOVE FRONT EXHAUST PIPE (SUB-CATALYTIC CONVERTER)

(a) Remove the two bolts holding the front exhaust pipe to the tailpipe stopper bracket.

(b) Remove the two bolts holding the front exhaust pipe to the tailpipe. Remove the gasket.

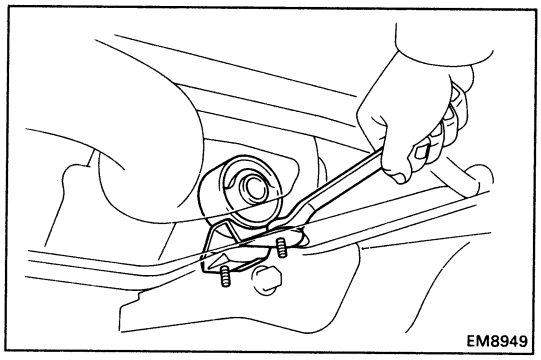

(c) Remove the two bolts and support bracket.

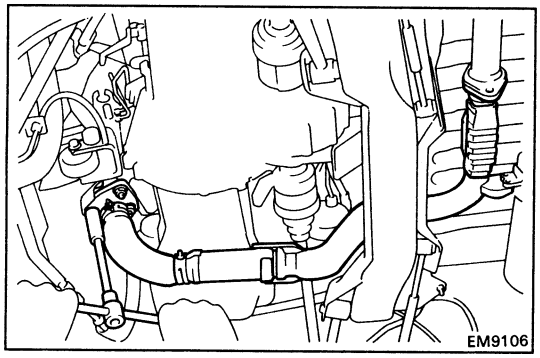

(d) Using a 14 mm deep socket wrench, remove the three nuts, front exhaust pipe and gasket.

2. REINSTALL FRONT EXHAUST PIPE (SUB-CATALYTIC CONVERTER)

(a) Place a new gasket on the front of the front exhaust pipe.

(b) Using a 14 mm deep socket wrench, install the front exhaust pipe with three new nuts.

Torque: 630 kg-cm (46 ft-lb, 62 N·m)

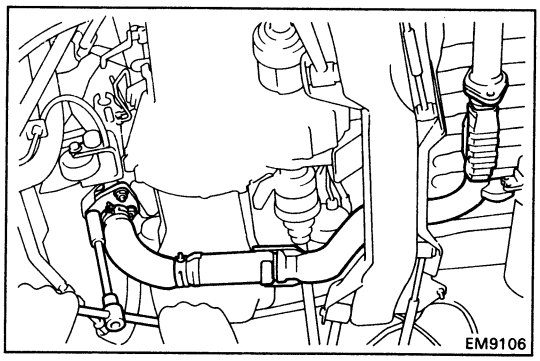

(c) Install the support bracket with the two bolts.

Torque: 210 kg-cm (15 ft-lb, 21 N·m)

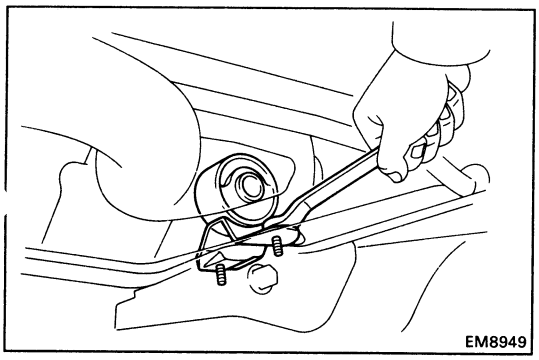

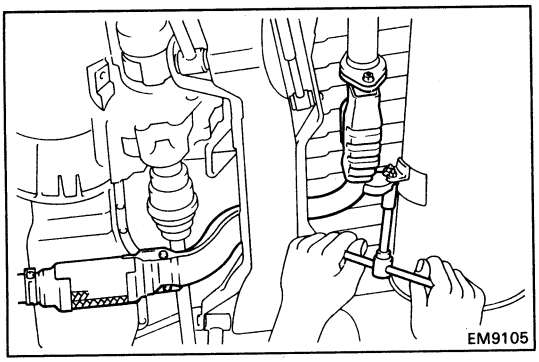

(d) Place a new gasket between the exhaust pipe and tailpipe.

(e) Temporarily install the two bolts holding the front exhaust pipe to the tailpipe.

(f) Install the two bolts holding the stopper bracket of the front exhaust pipe to the tailpipe stopper bracket.

Torque: 190 kg-cm (14 ft-lb, 19 N·m)

(g) Tighten the two bolts holding the front exhaust pipe to the tail pipe.

Torque: 440 kg-cm (32 ft-lb, 43 N·m)

EFI SYSTEM

	Page
DESCRIPTION	FI-2
PRECAUTIONS	FI-5
INSPECTION PRECAUTIONS	FI-5
TROUBLESHOOTING	FI-11
DIAGNOSIS SYSTEM	FI-25
TROUBLESHOOTING WITH VOLT/OHMMETER	FI-33
FUEL SYSTEM	FI-85
Fuel Pump	FI-85
Cold Start Injector (3S-GTE)	FI-99
Cold Start Injector (5S-FE)	FI-102
Fuel Pressure Regulator (3S-GTE)	FI-105
Fuel Pressure Regulator (5S-FE)	FI-107
Injectors (3S-GTE)	FI-110
Injectors (5S-FE)	FI-120
Fuel Tank and Lines	FI-129
AIR INDUCTION SYSTEM	FI-131
Air Flow Meter (3S-GTE)	FI-131
Throttle Body (3S-GTE)	FI-134
Throttle Body (5S-FE)	FI-140
Idle Speed Control (ISC) Valve (3S-GTE)	FI-148
Idle Speed Control (ISC) Valve (5S-FE)	FI-151
ELECTRONIC CONTROL SYSTEM	FI-154
Location of Electronic Control Parts	FI-154
EFI Main Relay	FI-156
Circuit Opening Relay	FI-157
Cold Start Injector Time Switch	FI-158
Solenoid Resistor (3S-GTE)	FI-159
Fuel Pump Relay and Resistor (3S-GTE)	FI-160
Fuel Pressure VSV (5S-FE)	FI-161
T-VIS VSV (3S-GTE)	FI-163
Turbocharging Pressure VSV (3S-GTE)	FI-165
EGR VSV	FI-167
Water Temperature Sensor	FI-168
Intake Air Temperature Sensor (5S-FE)	FI-169
Vacuum Sensor (Manifold Absolute Pressure Sensor) (5S-FE)	FI-170
Turbocharging Pressure Sensor (3S-GTE)	FI-171
EGR Gas Temperature Sensor (3S-GTE and 5S-FE (CALIF. only))	FI-172
Oxygen Sensor (Main)	FI-173
Sub-Oxygen Sensor (5S-FE CALIF. only)	FI-175
Electronic Controlled Unit (ECU)	FI-176
Fuel Cut RPM	FI-182

DESCRIPTION

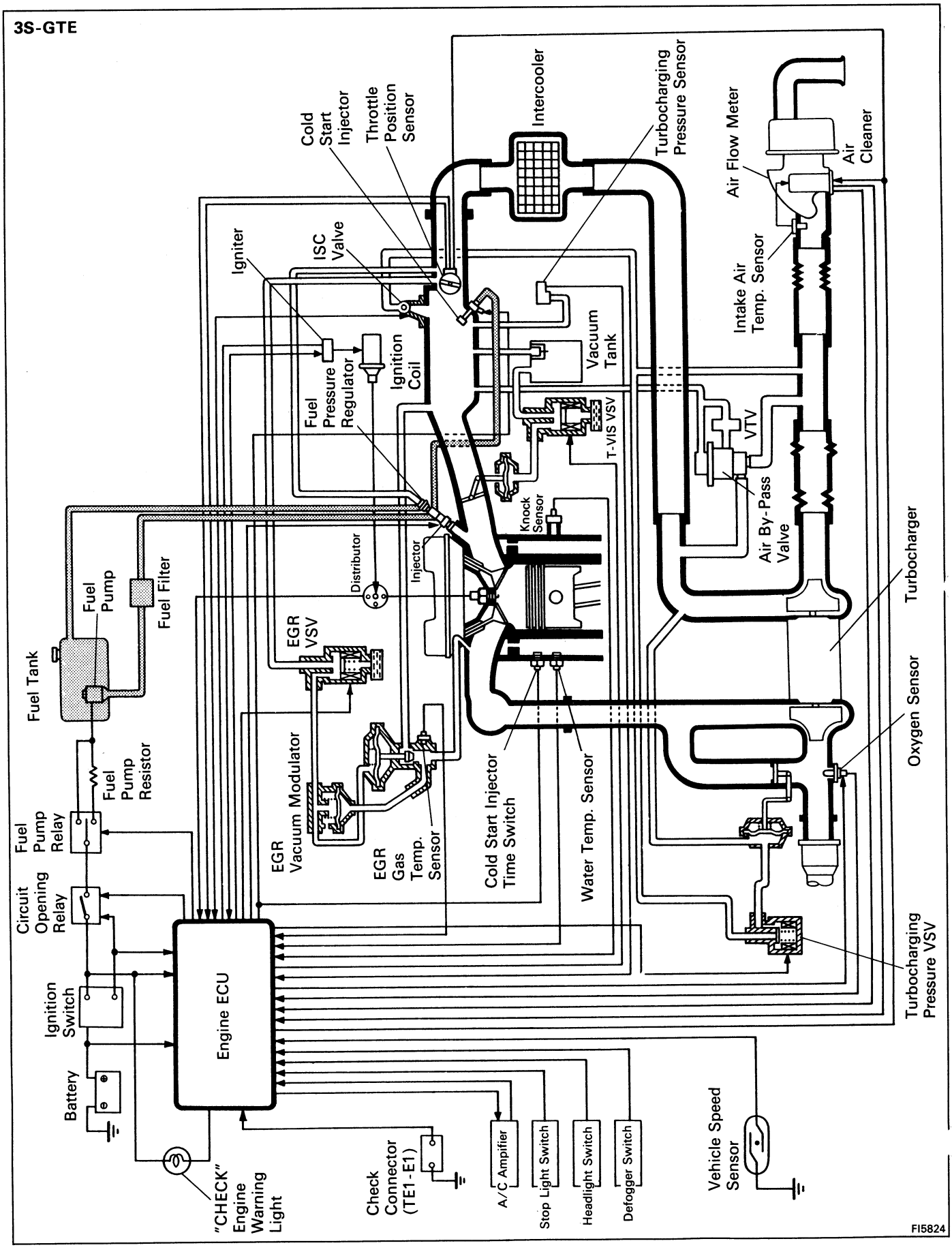

5S-FE

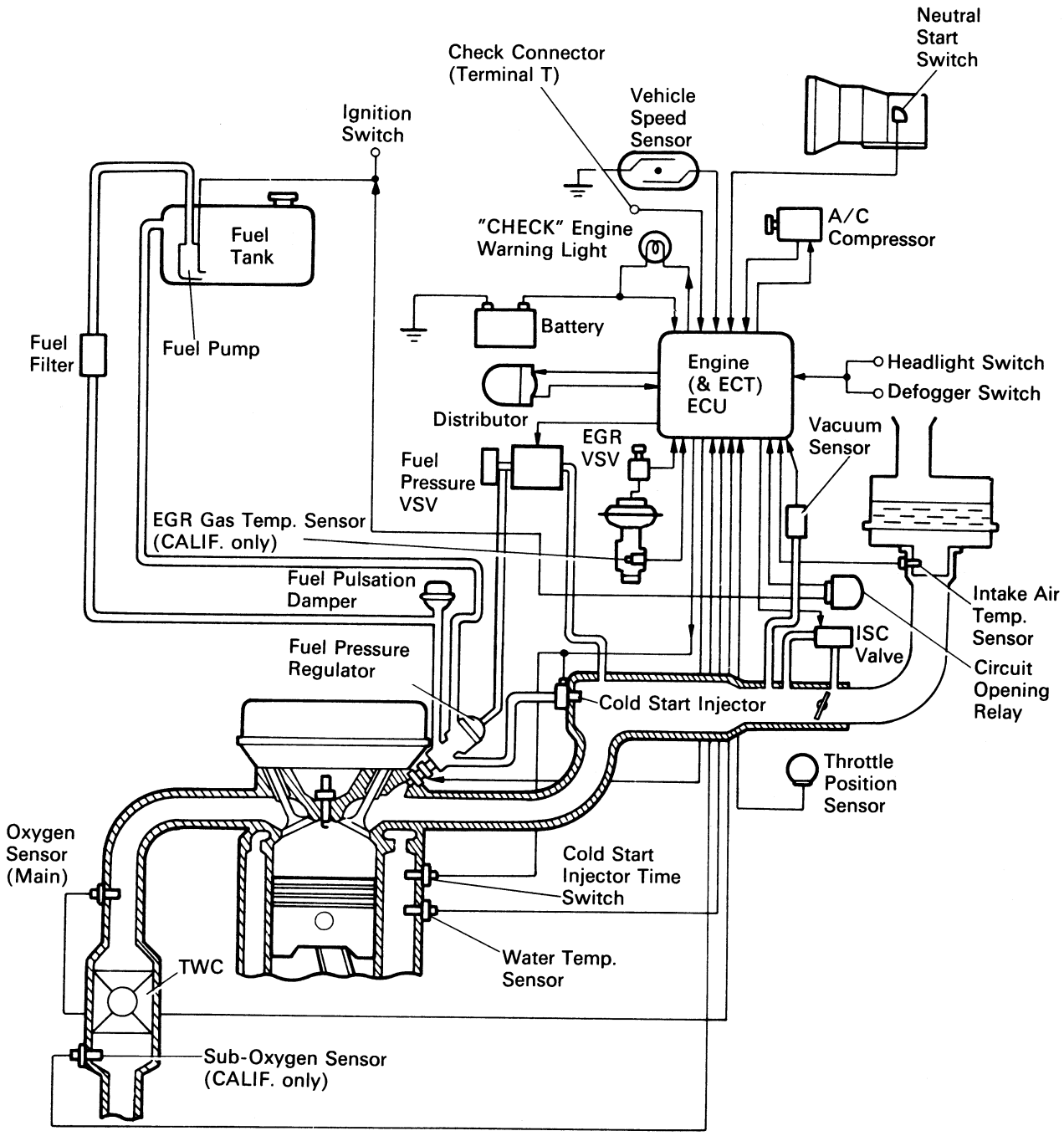
Neutral Start Switch
Check Connector (Terminal T)
Vehicle Speed Sensor
Ignition Switch
A/C Compressor
"CHECK" Engine Warning Light
Fuel Tank
Battery
Fuel Filter
Fuel Pump
Engine (& ECT) ECU
Headlight Switch
Defogger Switch
Distributor
EGR VSV
Vacuum Sensor
Fuel Pressure VSV
EGR Gas Temp. Sensor (CALIF. only)
Fuel Pulsation Damper
Intake Air Temp. Sensor
ISC Valve
Fuel Pressure Regulator
Circuit Opening Relay
Cold Start Injector
Throttle Position Sensor
Oxygen Sensor (Main)
Cold Start Injector Time Switch
Water Temp. Sensor
TWC
Sub-Oxygen Sensor (CALIF. only)

FI5808

The EFI system is composed of three basic sub-systems: Fuel, Air Induction and Electronic Control Systems.

FUEL SYSTEM

Fuel is supplied under constant pressure to the EFI injectors by an electric fuel pump. The injectors inject a metered quantity of fuel into the intake port in accordance with signals from the ECU (Electronic Control Unit).

AIR INDUCTION SYSTEM

The air induction system provides sufficient air for engine operation.

ELECTRONIC CONTROL SYSTEM

The MR2 3S-GTE and 5S-FE engines are equipped with which centrally controls the EFI, ESA, ISC, Diagnosis systems etc. by means of an Electronic Control Unit (ECU-formerly EFI computer) employing a microcomputer.

The ECU, TCCS controls the following functions:

1. Electronic Fuel Injection (EFI)
   The ECU receives signals from various sensors indicating changing engine operation conditions such as:
   - Intake air volume (3S-GTE)
   - Intake manifold pressure (5S-FE)
   - Intake air temperature
   - Coolant temperature
   - Engine rpm
   - Throttle valve opening angle
   - Exhaust oxygen content etc.

   The signals are utilized by the ECU to determine the injection duration necessary for an optimum air-fuel ratio.

2. Electronic Spark Advance (ESA)
   The ECU is programmed with data for optimum ignition timing under any and all operating conditions. Using data provided by sensors which monitor various engine functions (rpm, coolant temperature, etc.), the microcomputer (ECU) triggers the spark at precisely right instant. (See IG section)

3. Idle Speed Control (ISC)
   The ECU is programmed with target idling speed values to respond to different engine conditions (coolant temperature, air conditioner ON/OFF, etc.). Sensors transmit signals to the ECU which controls the flow of air through the by-pass of the throttle valve and adjust idle speed to the target value.

4. Diagnosis
   The ECU detects any malfunctions and abnormalties in the sensor network and lights a "CHECK" engine warning light on the instrument panel. At the same time, the trouble is identified and a diagnosis code is recorded by the ECU. The diagnosis code can be read by the number of blinks of the "CHECK" engine warning light when terminals TE1 and E1 are connected. The diagnostic codes are refer to the later page. (See page FI-28 or 30)

5. Fail-safe Function
   In the event of the sensor malfunctioning, a back-up circuit will take over to provide minimal drivability, and the "CHECK" engine warning light will illuminate.

PRECAUTIONS

1. **Before working on the fuel system, disconnect the cable from negative (–) terminal of the battery.**

   HINT: Any diagnostic code retained by the computer will be erased when the battery terminal is removed. Therefore, if necessary, read the diagnosis before removing the battery terminal.

2. **Do not smoke or work on open flame when working on the fuel system.**

3. **Keep gasoline away from rubber or leather parts.**

INSPECTION PRECAUTIONS

MAINTENANCE PRECAUTIONS

1. **CHECK CORRECT ENGINE TUNE-UP**
   (See page EM-10)

2. **PRECAUTIONS WHEN CONNECTING GAUGE**

   (a) Use the battery as the power source for the timing light, tachometer, etc.

   (b) Connect the test probe of a tachometer to the terminal IG⊖ of the check connector.

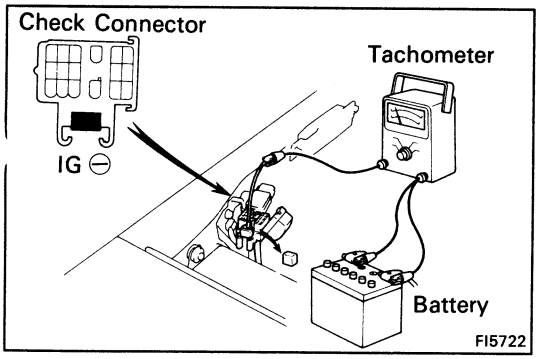

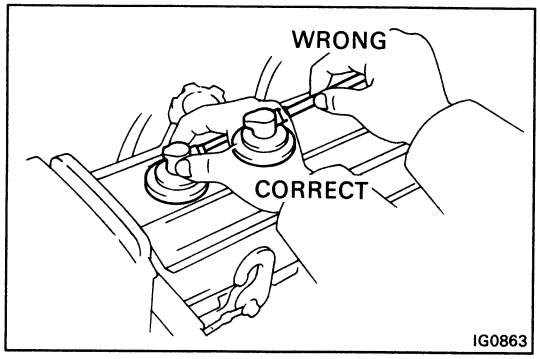

3. **IN EVENT OF ENGINE MISFIRE, FOLLOWING PRECAUTIONS SHOULD BE TAKEN**

   (a) Check proper connection of battery terminals, etc.

   (b) Handle high-tension cords carefully.

   (c) After repair work, check that the ignition coil terminals and all other ignition system lines are reconnected securely.

   (d) When cleaning the engine compartment, be especially careful to protect the electrical system from water.

4. **PRECAUTIONS WHEN HANDLING OXYGEN SENSOR**

   (a) Do not allow oxygen sensor to drop or hit against an object.

   (b) Do not allow the sensor to come into contact with water.

IF VEHICLE IS EQUIPPED WITH MOBILE RADIO SYSTEM (HAM, CB, ETC.)

The ECU has been designed so that it will not be affected by outside interference.

However, if your vehicle is equipped with a CB radio transceiver, etc. (even one with about 10 W output), it may, at times, have an effect upon ECU operation, especially if the antenna and feeder are installed nearby.

Therefore, observe the following precautions:

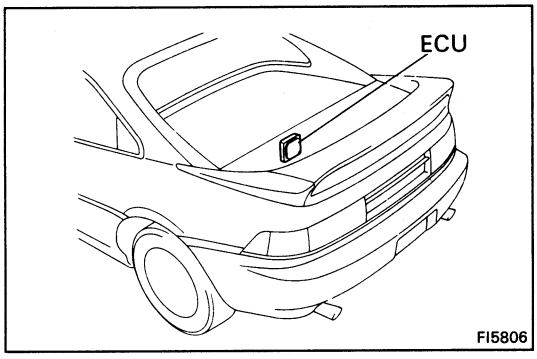

1. Install the antenna as far as possible from the ECU. The ECU is located under the radio so the antenna should be installed at the rear side of the vehicle.
2. Keep the antenna feeder as far away as possible from the ECU wires – at least 20 cm (7.87 in.) – and, especially, do not wind them together.
3. Check that the feeder and antenna are properly adjusted.
4. Do not equip your vehicle with a powerful mobile radio system.
5. Do not open the cover or the case of the ECU unless absolutely necessary. (If the IC terminals are touched, the IC may be destroyed by static electricity.)

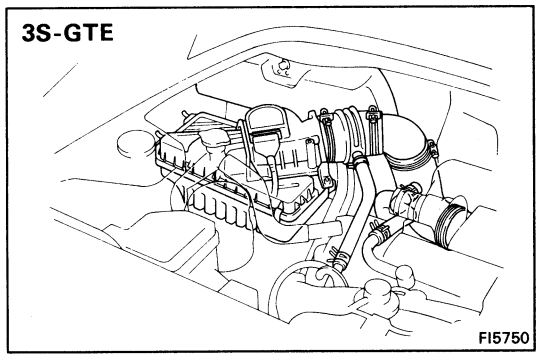

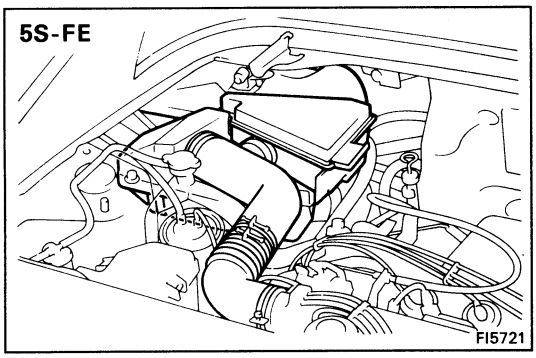

AIR INDUCTION SYSTEM

1. Separation of the engine oil dipstick, oil filler cap, PCV hose, etc. may cause the engine to run out of tune.
2. Disconnection, looseness or cracks in the parts of the air induction system between the throttle body and cylinder head will cause air suction and cause the engine to run out of tune.

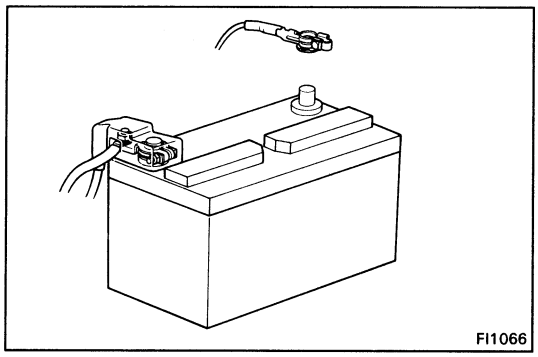
FI1066

ELECTRONIC CONTROL SYSTEM

1. Before removing EFI wiring connectors, terminals, etc., first disconnect the power by either turning the ignition switch OFF or disconnecting the battery terminals.

   HINT: Always check the diagnosis code before disconnecting the battery terminals.

2. When installing the battery, be especially careful not to incorrectly connect the positive (+) and negative (–) cables.

3. Do not permit parts to receive a severe impact during removal or installation. Handle all EFI parts carefully, especially the ECU.

4. Do not be careless during troubleshooting as there are numerous transistor circuits and even slight terminal contact can cause further troubles.

5. Do not open the ECU cover.

6. When inspecting during rainy weather, take care to prevent entry of water. Also, when washing the engine compartment, prevent water from getting on the EFI parts and wiring connectors.

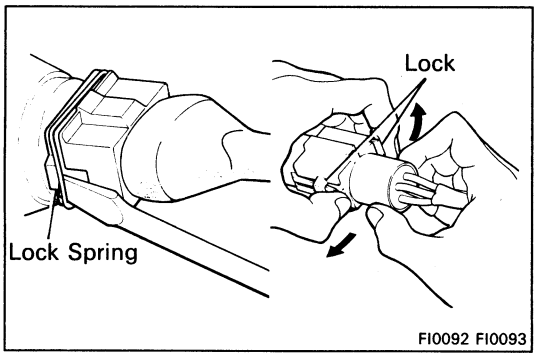

FI0092 FI0093

7. Parts should be replaced as an assembly.

8. Care is required when pulling out and inserting wiring connectors.

   (a) Release the lock and pull out the connector, pulling on the connectors.

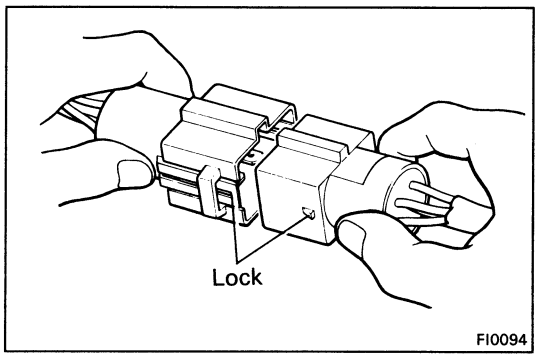

FI0094

   (b) Fully insert the connector and check that it is locked.

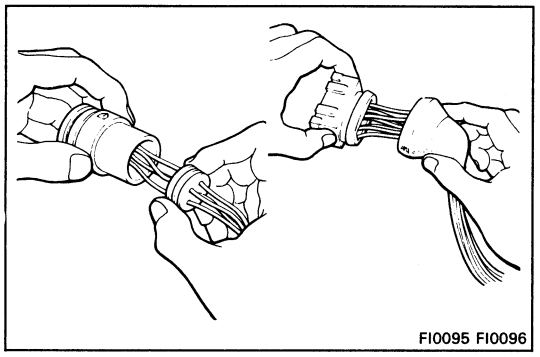
FI0095 FI0096

9. When inspecting a connector with a volt/ohmmeter.

   (a) Carefully take out the water-proofing rubber if it is a water-proof type connector.

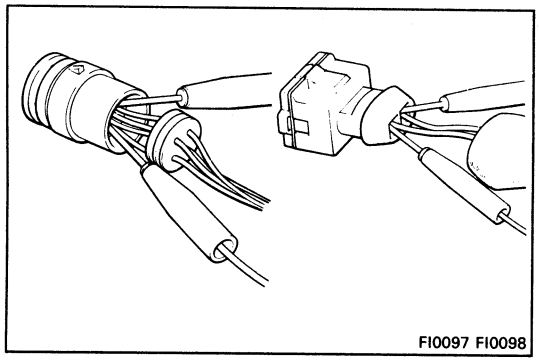
FI0097 FI0098

(b) Insert the test probe into the connector from wiring side when checking the continuity, amperage or voltage.

(c) Do not apply unnecessary force to the terminal.

(d) After checking, install the water-proofing rubber on the connector securely.

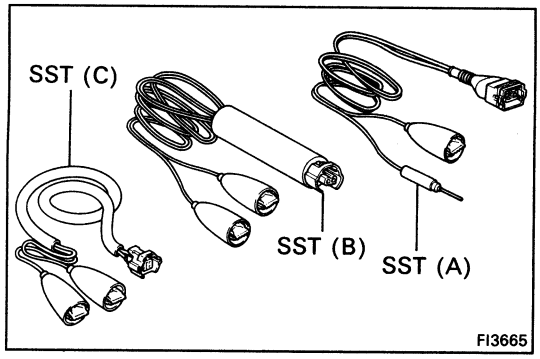

FI3665

10. Use SST for inspection or test of the injector, cold start injector or its wiring connector.

SST 09842-30050 (A) and 09842-30060 (B) for 3S-GTE
09842-30050 (A) and 09842-30070 (C) for 5S-FE

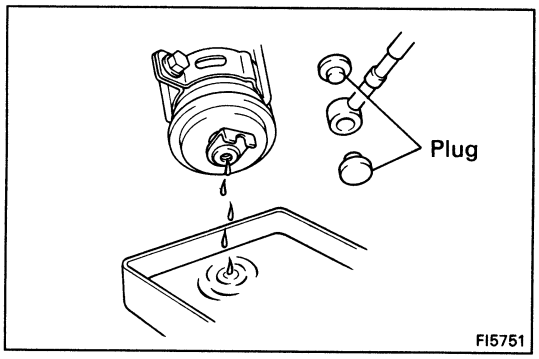

FI5751

FUEL SYSTEM

1. When disconnecting the high fuel pressure line, a large amount of gasoline will spill out, so observe the following procedures:

(a) Put a container under the connection.

(b) Slowly loosen the connection.

(c) Disconnect the connection.

(d) Plug the connection with a rubber plug.

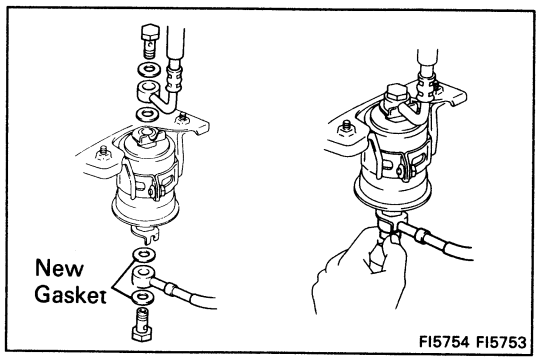

FI5754 FI5753

2. When connecting the flare nut or union bolt on the high pressure pipe union, observe the following procedures:

(Union Bolt Type)

(a) Always use a new gasket.

(b) Tighten the union bolt by hand.

(c) Tighten the union bolt to the specified torque.

Torque: 300 kg-cm (22 ft-lb, 29 N·m)

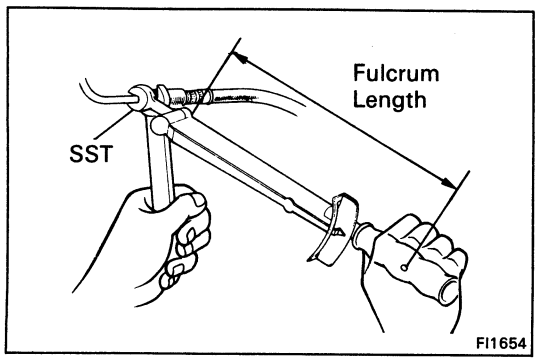

FI1654

(Flare Nut Type)

(a) Apply a light coat of engine oil to the flare nut and tighten the flare nut by hand.

(b) Using SST, tighten the flare nut to specified torque.

SST 09631-22020

Torque: 310 kg-cm (22 ft-lb, 30 N·m)

HINT: Use a torque wrench with a fulcrum length of 30 cm (11.81 in.).

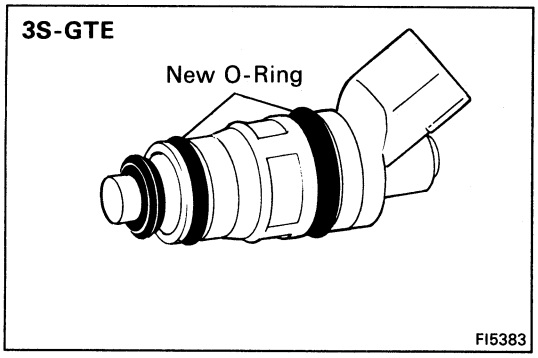

3. Observe the following precautions when removing and installing the injectors.
   (a) Never reuse the O-ring.
   (b) When placing a new O-ring on the injector, take care not to damage it in any way.
   (c) Coat a new O-ring with spindle oil or gasoline before installing – never use engine, gear or brake oil.

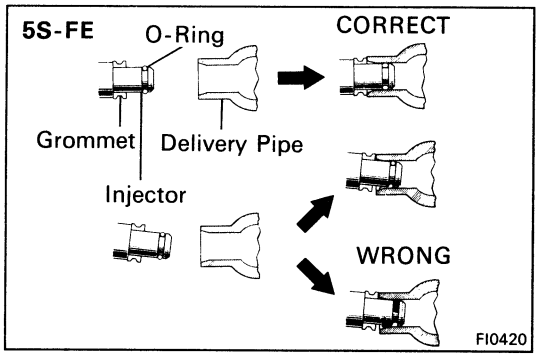

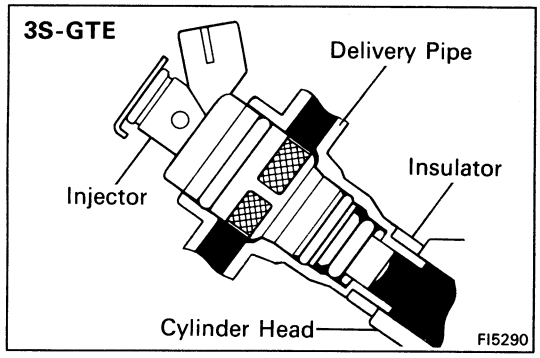

4. Install the injector to delivery pipe and cylinder head as shown in the figure.

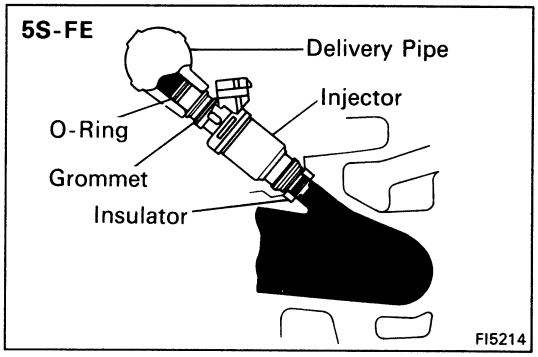

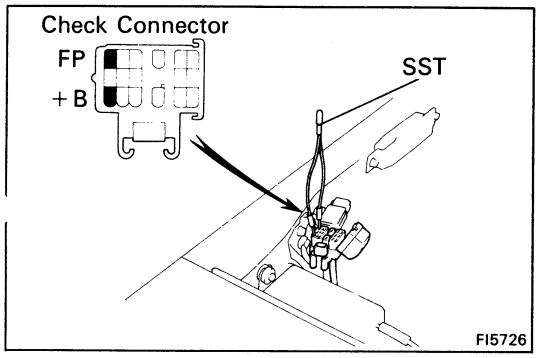

5. Check that there are no fuel leaks after performing any maintenance on the fuel system.
   (a) Using SST, connect terminals +B and FP of the check connector.

   SST 09843-18020

   (b) With engine stopped, turn the ignition switch ON.

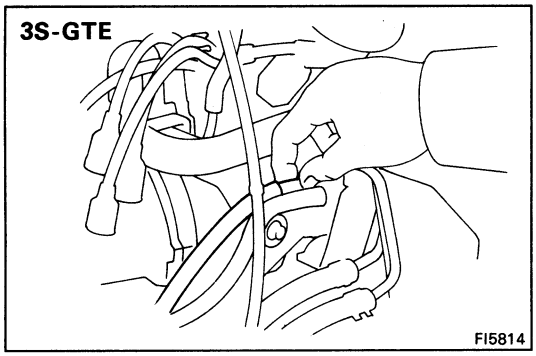

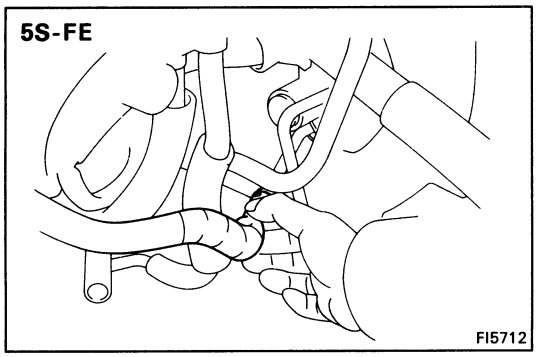

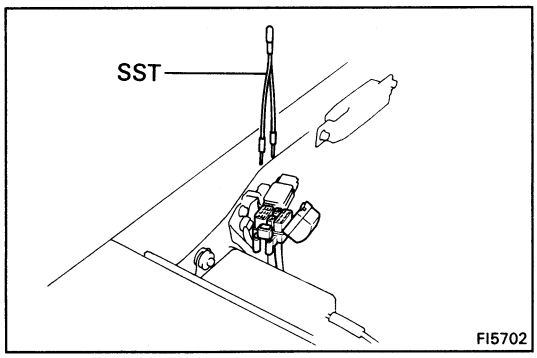

(c) When the fuel return hose is pinched, the pressure within high pressure line will rise to approx. 4 kg/cm^2 (57 psi, 392 kPa). In this state, check to see that there are no leaks from any part of the fuel system.

NOTICE: Always pinch the hose. Avoid bending as it may cause the hose to crack.

(d) Turn the ignition switch OFF.

(e) Remove the SST.

SST 09843-18020

TROUBLESHOOTING

TROUBLESHOOTING HINTS

1. Engine troubles is usually not caused by the EFI system. When troubleshooting, always first check the condition of the other systems.
   (a) Electronic source
      - Battery
      - Fusible links
      - Fuses

   (b) Body ground
   (c) Fuel supply
      - Fuel leakage
      - Fuel filter
      - Fuel pump

   (d) Ignition system
      - Spark plugs
      - High-tension cords
      - Distributor
      - Ignition coil
      - Igniter

   (e) Air induction system
      - Vacuum leaks

   (f) Emission control system
      - PCV system
      - EGR system

   (g) Others
      - Ignition timing (ESA system)
      - Idle speed (ISC system)
      - etc.

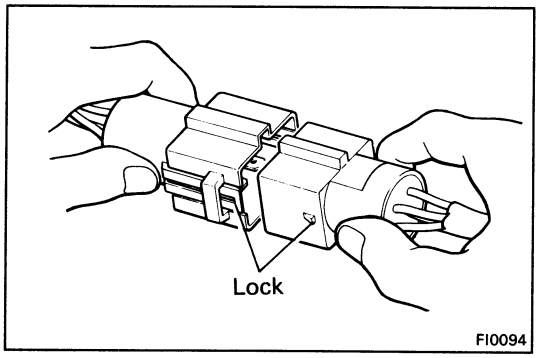

2. The most frequent cause of problems is simply a bad contact in wiring connectors. Always check that connections are secure.

   When inspecting the connector, pay particular attention to the following points:
   (a) Check to see that the terminals are not bent.
   (b) Check to see that the connector is pushed in completely and locked.
   (c) Check to see that there is no signal change when the connector is slightly tapped or wiggled.

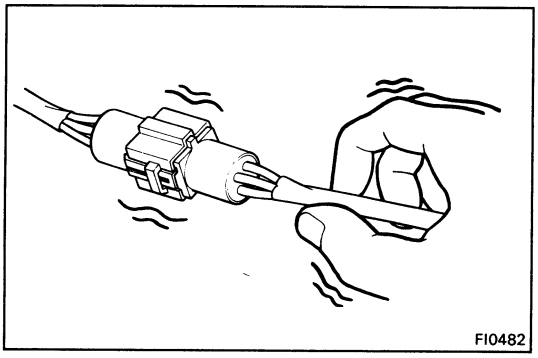

3. Troubleshoot sufficiently for other causes before replacing the ECU, as the ECU is of high quality and it is expensive.

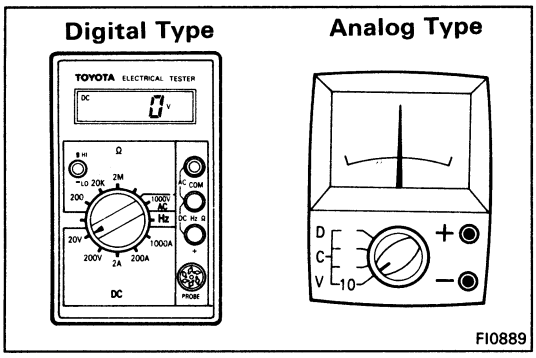

4. Use a volt/ohmmeter with high impedance (10 kΩ/V minimum) for troubleshooting of the electrical circuit. (See page FI-33)

TROUBLESHOOTING PROCEDURES

SYMPTOM – DIFFICULT TO START OR TO NO START (ENGINE WILL NOT CRANK OR CRANKS SLOWLY)

CHECK ELECTRONIC SOURCE → BAD →
1. Battery
   (1) Connections
   (2) Gravity – Drive belt – Charging system
   (3) Voltage

OK ↓

CHECK STARTING SYSTEM → BAD →
1. Ignition switch
2. (A/T) Neutral start switch
3. (M/T) Clutch start switch
4. (M/T) Starter relay (See page ST-18)
5. Starter (See page ST-3)
6. Wirings/Connections

SYMPTOM – DIFFICULT TO START OR NO START (CRANKS OK)

CHECK DIAGNOSIS SYSTEM
Check for output of diagnosis code. (See page FI-25) → Malfunction code (s) →
Diagnostic codes (See page FI-28 or 30)

Normal code ↓

DOES ENGINE START WITH ACCELERATOR PEDAL DEPRESSED? → OK →
ISC system
(1) ISC valve (See page FI-148 or 151)
(2) Wiring connection

NO ↓

CHECK FOR VACUUM LEAKS IN AIR INTAKE LINE → BAD →
1. Oil filler cap
2. Oil dipstick
3. Hose connections
4. PCV hose(s)
5. EGR system – EGR valve stays open

OK CONTINUED ON PAGE FI-13

OK CONTINUED FROM PAGE FI-12

CHECK IGNITION SPARK
(See page IG-5 or 10)

BAD →
1. High-tension cords
2. Distributor
3. Ignition coil
4. Igniter

OK

CHECK SPARK PLUGS
Standard:
3S-GTE 0.8 mm (0.031 in.)
5S-FE 1.1 mm (0.043 in.)
HINT: Check compression pressure and valve clearance if necessary.

NO →
1. Spark plugs (See page IG-6 or 11)
2. Compression pressure (See page EM-25)
Minimum (at 250 rpm):
3S-GTE 9.0 kg/cm² (128 psi, 883 kPa)
5S-FE 10.0 kg/cm² (142 psi, 981 kPa)
3. Valve clearance (Cold)
(See page EM-11 or 16)
Standard:

3S-GTE	**IN**	**0.15 – 0.25 mm (0.006 – 0.010 in.)**
	EX	**0.20 – 0.30 mm (0.008 – 0.012 in.)**
5S-FE	**IN**	**0.19 – 0.29 mm (0.007 – 0.011 in.)**
	EX	**0.28 – 0.38 mm (0.011 – 0.015 in.)**

BAD (All Plugs WET) →
1. Injectors – Shorted or leaking
2. Injector wiring – short circuited
3. Cold start injector – leakage
(See page FI-99 or 102)
4. Cold start injector time switch
(See page FI-158)

OK

CHECK FUEL SUPPLY TO INJECTOR
1. Fuel tank
2. Fuel pressure in fuel line
(1) Connect terminals +B and FP or the check connector.
(2) Fuel pressure at fuel hose of fuel filter can be felt.
(See page FI-87)

BAD →
1. Fuel line – leakage – deformation
2. Fuses
3. Circuit opening relay
(See page FI-157)
4. Fuel pump (See page FI-85)
5. Fuel filter
6. Fuel pressure regulator
(See page FI-105 or 107)

OK

CHECK IGNITION TIMING
1. Connect terminals TE1 and E1 of the check connector.
2. Check ignition timing.
Standard: 10° BTDC @ idle

BAD →
Ignition timing – Adjust
(See page IG-17 or 22)

OK CONTINUED ON PAGE FI-14

OK CONTINUED FROM PAGE FI-13

CHECK EFI ELECTRONIC CIRCUIT USING VOLT/OHMMETER
(See page FI-33)

BAD →

1. Wiring connections
2. Power to ECU
   (1) Fusible links
   (2) Fuses
   (3) EFI main relay (See page FI-156)
3. (3S-GTE)
   Air flow meter (See page FI-131)
4. (5S-FE)
   Vacuum sensor (See page FI-170)
5. Water temp. sensor (See page FI-168)
6. Intake air temp. sensor
   (See page FI-131 or 169)
7. Injection signal circuit
   (1) Injector wiring
   (2) (3S-GTE)
   Solenoid resistor
   (See page FI-159)
   (3) ECU (See page FI-176)

SYMPTOM – ENGINE OFTEN STALLS

CHECK DIAGNOSIS SYSTEM
Check for output of diagnosis code.
(See page FI-25)

Malfunction code (s) →

Diagnostic codes
(See page FI-28 or 30)

Normal code

CHECK FOR VACUUM LEAKS IN AIR INTAKE LINE

BAD →

1. Oil filler cap
2. Oil dipstick
3. Hose connections
4. PCV hose (s)
5. EGR system – EGR valve stays open

OK

CHECK FUEL SUPPLY TO INJECTOR
1. Fuel tank
2. Fuel pressure in fuel line
   (1) Connect terminals +B and FP of the check connector.
   (2) Fuel pressure at fuel hose of fuel fuel filter can be felt.
   (See page FI-87)

BAD →

1. Fuel lines – leakage – deformation
2. Fuses
3. Fuel pump (See page FI-85)
4. Fuel filter
5. Fuel pressure regulator
   (See page FI-105 or 107)

OK

CHECK AIR FILTER

BAD →

Element – Clean or replace

OK CONTINUED ON PAGE FI-15

OK CONTINUED FROM PAGE FI-14

CHECK IDLE SPEED
Standard:
3S-GTE 800 ± 50 rpm
5S-FE 750 ± 50 rpm USA M/T
700 ± 50 rpm USA A/T
850 ± 50 rpm CANADA M/T
750 ± 50 rpm CANADA A/T

BAD →
1. ISC system
   (1) Wiring connection
   (2) ISC valve (See page FI-148 or 151)
   (3) ECU (test by substitution)
2. (5S-FE)
   Idle speed – Adjust
   (See page EM-20)

OK

CHECK IGNITION TIMING
1. Connect terminals TE1 and E1 of the check connector.
2. Check ignition timing.
   Standard: 10° BTDC @ idle

NO →
Ignition timing – Adjust
(See page IG-17 or 22)

OK

CHECK SPARK PLUGS
Standard:
3S-GTE 0.8 mm (0.031 in.)
5S-FE 1.1 mm (0.043 in.)
HINT: Check compression pressure and valve clearance if necessary.

NO →
1. Spark plugs (See page IG-6 or 11)
2. Compression pressure (See page EM-25)
   Minimum (at 250 prm):
   3S-GTE 9.0 kg/cm² (128 psi, 883 kPa)
   5S-FE 10.0 kg/cm² (142 psi, 981 kPa)
3. Valve clearance (Cold)
   (See page EM-11 or 16)
   Standard:

3S-GTE	**IN**	**0.15 – 0.25 mm (0.006 – 0.010 in.)**
	EX	**0.20 – 0.30 mm (0.008 – 0.012 in.)**
5S-FE	**IN**	**0.19 – 0.29 mm (0.007 – 0.011 in.)**
	EX	**0.28 – 0.38 mm (0.011 – 0.015 in.)**

OK

CHECK COLD START INJECTOR
(See page FI-99 or 102)

BAD →
1. Cold start injector
   (See page FI-99 or 102)
2. Cold start injector time switch
   (See page FI-158)

OK

CHECK FUEL PRESSURE
(See page FI-87)

BAD →
1. Fuel pump (See page FI-85)
2. Fuel filter
3. Fuel pressure regulator
   (See page FI-105 or 107)

OK

CHECK INJECTORS
(See page FI-110 or 120)

BAD →
Injection condition

OK CONTINUED ON PAGE FI-16

OK CONTINUED FROM PAGE FI-15

CHECK EFI ELECTRONIC CIRCUIT USING VOLT/OHMMETER
(See page FI-33)

BAD →

1. Wiring connections
2. Power to ECU
   (1) Fusible links
   (2) Fuses
   (3) EFI main relay (See page FI-156)
3. (3S-GTE)
   Air flow meter (See page FI-131)
4. (5S-FE)
   Vacuum sensor (See page FI-170)
5. Water temp. sensor (See page FI-168)
6. Intake air temp. sensor
   (See page FI-169)
7. Injection signal circuit
   (1) Injector wiring
   (2) (3S-GTE)
   Solenoid resistor
   (See page FI-159)
   (3) ECU (See page FI-176)

SYMPTOM – ENGINE SOMETIMES STALLS

CHECK DIAGNOSIS SYSTEM
Check for output of diagnosis code.
(See page FI-25)

Malfunction code(s) →

Diagnostic codes
(See page FI-28 or 30)

Normal code

(3S-GTE)
CHECK AIR FLOW METER
(See page FI-131)

BAD →

Air flow meter

OK

CHECK WIRING CONNECTORS AND RELAYS
Check for signal change when the connector or relay is slightly tapped or wiggled.

BAD →

1. Connectors
2. EFI main relay (See page FI-156)
3. Circuit opening relay (See page FI-157)

SYMPTOM – ROUGH IDLING AND/MISSING

CHECK DIAGNOSIS SYSTEM
Check for output of diagnosis code.
(See page FI-25)

Malfunction code(s) →

Diagnostic codes
(See page FI-28 or 30)

Normal code

CHECK FOR VACUUM LEAKS IN AIR INTAKE LINE

BAD →

1. Oil filler cap
2. Oil dipstick
3. Hose connections
4. PCV hose(s)
5. EGR system – EGR valve stays open

OK CONTINUED ON PAGE FI-17

OK CONTINUED FROM PAGE FI-16

CHECK AIR FILTER → BAD → Element – Clean or replace

OK

CHECK IDLE SPEED
Standard:
3S-GTE 800 ± 50 rpm
5S-FE 750 ± 50 rpm USA M/T
700 ± 50 rpm USA A/T
850 ± 50 rpm CANADA M/T
750 ± 50 rpm CANADA A/T

→ BAD →
1. ISC system
   (1) Wiring connection
   (2) ISC valve (See page FI-148 or 151)
   (3) ECU (test by substitution)
2. (5S-FE)
   Idle speed – Adjust
   (See page EM-20)

OK

CHECK IGNITION TIMING
1. Connect terminals TE1 and E1 of the check connector.
2. Check ignition timing.
   Standard: 10° BTDC @ idle

→ NO → Ignition timing – Adjust (See page IG-17 or 22)

OK

CHECK SPARK PLUGS
Standard:
3S-GTE 0.8 mm (0.031 in.)
5S-FE 1.1 mm (0.043 in.)
HINT: Check compression pressure and valve clearance if necessary.

→ BAD →
1. Spark plugs (See page IG-6 or 11)
2. Compression pressure (See page EM-25)
   Minimum (at 250 rpm):
   3S-GTE 9.0 kg/cm² (128 psi, 883 kPa)
   5S-FE 10.0 kg/cm² (142 psi, 981 kPa)
3. Valve clearance (Cold)
   (See page EM-11 or 15)
   Standard:

3S-GTE	**IN**	**0.15 – 0.25 mm (0.006 – 0.010 in.)**
	EX	**0.20 – 0.30 mm (0.008 – 0.012 in.)**
5S-FE	**IN**	**0.19 – 0.29 mm (0.007 – 0.011 in.)**
	EX	**0.28 – 0.38 mm (0.011 – 0.015 in.)**

OK

(3S-GTE)
CHECK T-VIS VALVE
(See page EM-22)
Check that T-VIS valve is closed.

→ BAD →
1. T-VIS VSV (See page FI-163)
2. Vacuum leaks

OK

CHECK COLD START INJECTOR
(See page FI-99 or 102)

→ BAD →
1. Cold start injector
   (See page FI-99 or 102)
2. Cold start injector time switch
   (See page FI-158)

OK CONTINUED ON PAGE FI-18

OK CONTINUED FROM PAGE FI-17

CHECK FUEL PRESSURE
(See page FI-87)

BAD →
1. Fuel pump (See page FI-85)
2. Fuel filter
3. Fuel pressure regulator
(See page FI-105 or 107)

OK

CHECK INJECTORS
(See page FI-110 or 120)

BAD → Injection condition

OK

CHECK EFI ELECTRONIC CIRCUIT USING VOLT/OHMMETER
(See page FI-33)

BAD →
1. Wiring connections
2. Power to ECU
(1) Fusible links
(2) Fuses
(3) EFI main relay (See page FI-156)
3. (3S-GTE)
Air flow meter (See page FI-131)
4. (5S-FE)
Vacuum sensor (See page FI-170)
5. Water temp. sensor (See page FI-168)
6. Intake air temp. sensor
(See page FI-131 or 169)
7. Injection signal circuit
(1) Injector wiring
(2) ECU (See page FI-176)
8. Oxygen sensor (s)
(See page FI-173 or 175)

SYMPTOM – HIGH ENGINE SPEED (NO DROP)

HINT (5S-FE): Disconnecting the battery will cause the idling speed date in the ISC to be returned to the initial idling speed, causing the idling speed to rise above 750 rpm (USA M/T, CANADA A/T), 700 rpm (USA A/T), 850 rpm (CANADA M/T). Should this happen, either carry out a driving test, including stop-go several times at a speed above 10km/h, or start the engine, idle for 30 seconds and then turn the engine off repeatedly. By doing this, idle date will be stored in the ISC and the idle rpm will be at specified value.

CHECK ACCELERATOR LINKAGE

BAD → Linkage – Struck

OK

CHECK FOR VACUUM LEAKS IN AIR INTAKE LINE

BAD →
1. Oil filler cap
2. Oil dipstick
3. Hose connections
4. PCV hose(s)
5. EGR system – EGR valve stays open

OK

CHECK AIR CONDITIONER IDLE UP CIRCUIT

BAD → VSV for air conditioner – Leakage

OK

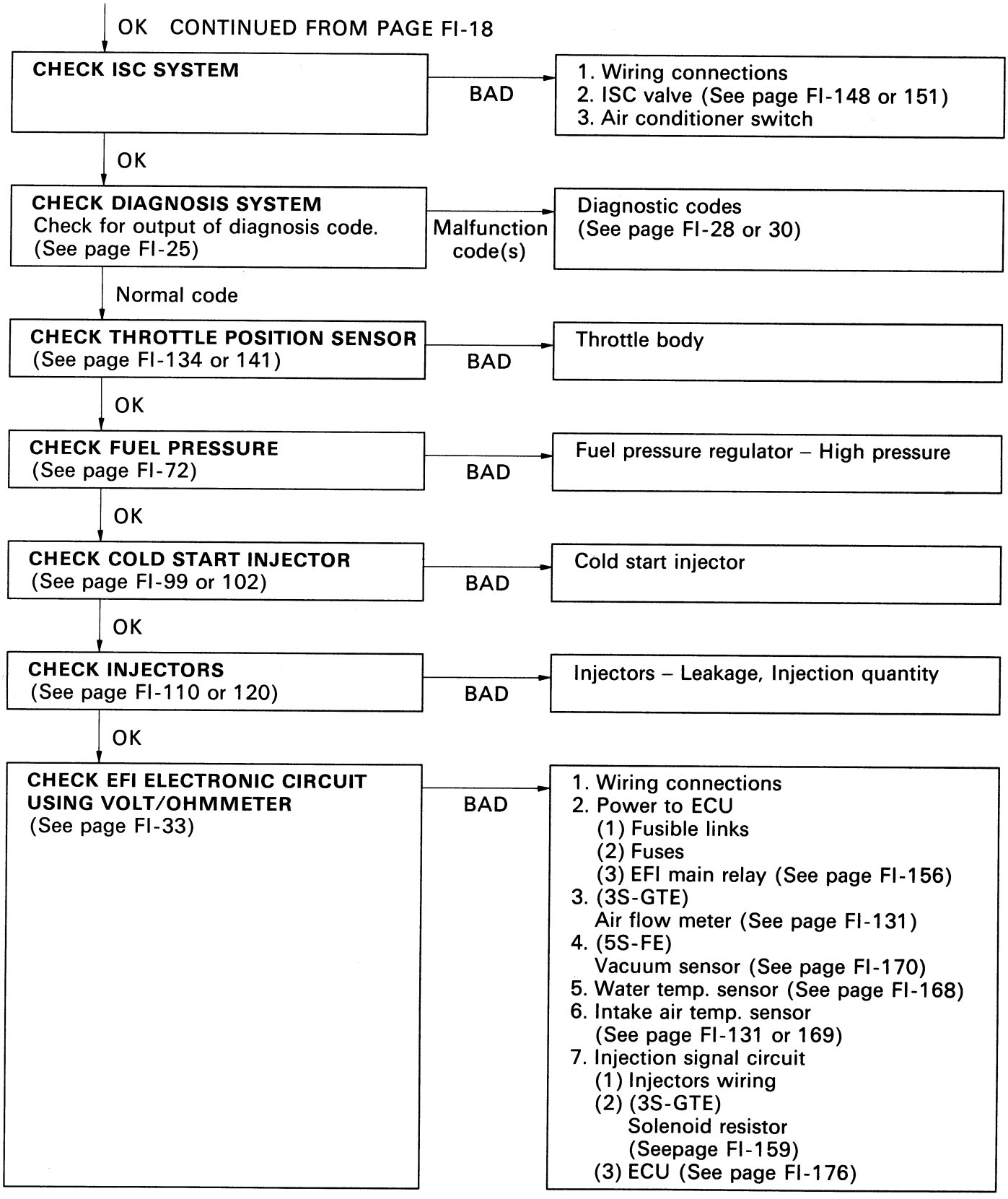
OK CONTINUED FROM PAGE FI-18
CHECK ISC SYSTEM
BAD
1. Wiring connections
2. ISC valve (See page FI-148 or 151)
3. Air conditioner switch
OK
CHECK DIAGNOSIS SYSTEM
Check for output of diagnosis code.
(See page FI-25)
Malfunction code(s)
Diagnostic codes
(See page FI-28 or 30)
Normal code
CHECK THROTTLE POSITION SENSOR
(See page FI-134 or 141)
BAD
Throttle body
OK
CHECK FUEL PRESSURE
(See page FI-72)
BAD
Fuel pressure regulator – High pressure
OK
CHECK COLD START INJECTOR
(See page FI-99 or 102)
BAD
Cold start injector
OK
CHECK INJECTORS
(See page FI-110 or 120)
BAD
Injectors – Leakage, Injection quantity
OK
CHECK EFI ELECTRONIC CIRCUIT USING VOLT/OHMMETER
(See page FI-33)
BAD
1. Wiring connections
2. Power to ECU
(1) Fusible links
(2) Fuses
(3) EFI main relay (See page FI-156)
3. (3S-GTE)
Air flow meter (See page FI-131)
4. (5S-FE)
Vacuum sensor (See page FI-170)
5. Water temp. sensor (See page FI-168)
6. Intake air temp. sensor
(See page FI-131 or 169)
7. Injection signal circuit
(1) Injectors wiring
(2) (3S-GTE)
Solenoid resistor
(Seepage FI-159)
(3) ECU (See page FI-176)

SYMPTOM – ENGINE BACKFIRES – Lean Fuel Mixture

CHECK DIAGNOSIS SYSTEM
Check for output of diagnosis code.
(See page FI-25)

→ Malfunction code(s) → Diagnostic codes (See pages FI-28 or 30)

↓ Normal code

CHECK FOR VACUUM LEAKS IN AIR INTAKE LINE

→ BAD →
1. oil filler cap
2. Oil dipstick
3. Hose connection(s)
4. PCV hose(s)
5. EGR system – EGR valve stays open

↓ OK

CHECK IGNITION TIMING
1. Connect terminals TE1 and E1 of the check connector.
2. Check ignition timing.
   Standard: 10° BTDC @ idle

→ NO → Ignition timing – Adjust (see page IG-17 or 22)

↓ OK

CHECK IDLE SPEED
Standard:

3S-GTE	**800 ± 50 rpm**
5S-FE	**750 ± 50 rpm USA M/T**
	700 ± 50 rpm USA A/T
	850 ± 50 rpm CANADA M/T
	750 ± 50 rpm CANADA A/T

→ BAD →
1. ISC system
   (1) Wiring connections
   (2) ISC valve (See page FI-148 or 151)
   (3) ECU (test by substitution)
2. (5S-FE)
   Idle speed – Adjust
   (See page EM-20)

↓ OK

CHECK COLD START INJECTOR
(See page FI-99 or 102)

→ BAD →
1. Cold start injector
   (See page FI-99 or 102)
2. Cold start injector time switch
   (See page FI-158)

↓ OK

CHECK FUEL PRESSURE
(See page FI-87)

→ BAD →
1. Fuel pump (See page FL-85)
2. Fuel filter
3. Fuel pressure regulator
   (See page FI-105 or 107)

↓ OK

CHECK INJECTORS
(See page FI-110 or 120)

→ BAD → Injector – Clogged

↓ OK CONTINUED ON PAGE FI-21

OK CONTINUED FROM PAGE FI-20

CHECK EFI ELECTRONIC CIRCUIT USING VOLT/OHMMETER
(See page FI-33)

BAD →

1. Wiring connections
2. Power to ECU
   (1) Fusible links
   (2) Fuses
   (3) EFI main relay (See page FI-156)
3. (3S-GTE)
   Air flow meter (See page FI-131)
4. (5S-FE)
   Vacuum sensor (See page FI-170)
5. Water temp. sensor (See page FI-168)
6. Intake air temp. sensor
   (See page FI-131 or 169)
7. Throttle position sensor
   (See page FI-134 or 141)
8. injection signal circuit
   (1) Injector wiring
   (2) (3S-GTE)
      Solenoid resistor
      (See page FI-159)
   (3) ECU (See page FI-176)
9. Oxygen sensor(s)
   (See page FI-173 or 175)

SYMPTOM – MUFFLER EXPLOSION (AFTER FIRE) – Rich Fuel Misfire

CHECK DIAGNOSIS SYSTEM
Check for output of diagnosis code.
(See page FI-25)

Malfunction code(s) →

Diagnostic codes
(See pages FI-28 or 30)

Normal code

CHECK IGNITION TIMING
1. Connect terminals TE1 and E1 of the check connector.
2. Check ignition timing.
   Standard: 10° BTDC @ idle

NO →

Ignition timing – Adjust
(See page IG-17 or 22)

OK

CHECK IDLE SPEED
Standard:

3S-GTE	**800 ± 50 rpm**
5S-FE	**750 ± 50 rpm USA M/T**
	700 ± 50 rpm USA A/T
	850 ± 50 rpm CANADA M/T
	750 ± 50 rpm CANADA A/T

BAD →

1. ISC system
   (1) Wiring connection
   (2) ISC valve (See page FI-148 or 151)
   (3) ECU (test by substitution)
2. (5S-FE)
   Idle speed – Adjust
   (See page EM-20)

OK

CHECK COLD START INJECTOR
(See page FI-99 or 102)

BAD →

1. Cold start injector
   (See page FI-99 or 102)
2. Cold start injector time switch
   (See page FI-158)

OK CONTINUED ON PAGE FI-22

OK CONTINUED FROM PAGE FI-21

CHECK FUEL PRESSURE
(See page FI-87)

BAD → Fuel pressure regulator
(See page FI-105 or 107)

OK

CHECK THROTTLE POSITION SENSOR
(See page FI-134 or 141)

BAD → Throttle body

OK

CHECK INJECTORS
(See page FI-110 or 120)

BAD → Injector – Leakage

OK

CHECK SPARK PLUGS
Standard:
3S-GTE 0.8 mm (0.031 in.)
5S-FE 1.1 mm (0.043 in.)
HINT: Check compression pressure and valve clearance if necessary.

NO →
1. Spark plugs (See page IG-6 or 11)
2. Compression pressure (See page EM-25)
   Minimum (at 250 rpm):
   3S-GTE 9.0 kg/cm² (128 psi, 883 kPa)
   5S-FE 10.0 kg/cm² (142 psi, 981 kPa)
3. Valve clearance (Cold)
   (See page EM-11 or 15)
   Standard:

3S-GTE	**IN**	**0.15 – 0.25 mm (0.006 – 0.010 in.)**
	EX	**0.20 – 0.30 mm (0.008 – 0.012 in.)**
5S-FE	**IN**	**0.19 – 0.29 mm (0.007 – 0.011 in.)**
	EX	**0.28 – 0.38 mm (0.011 – 0.015 in.)**

OK

CHECK EFI ELECTRONIC CIRCUIT USING VOLT/OHMMETER
(See page FI-33)

BAD →
1. Throttle position sensor
   (See page FI-134 or 141)
2. Injection signal circuit
   (1) Injector wirings
   (2) Fuel cut RPM (See page FI-182)
   (3) (3S-GTE)
   Solenoid resistor
   (See page FI-159)
   (4) ECU (See page FI-176)
3. Oxygen sensor(s)
   (See page FI-173 or 175)

SYMPTOM – ENGINE HESITATES AND/OR POOR ACCELERATION

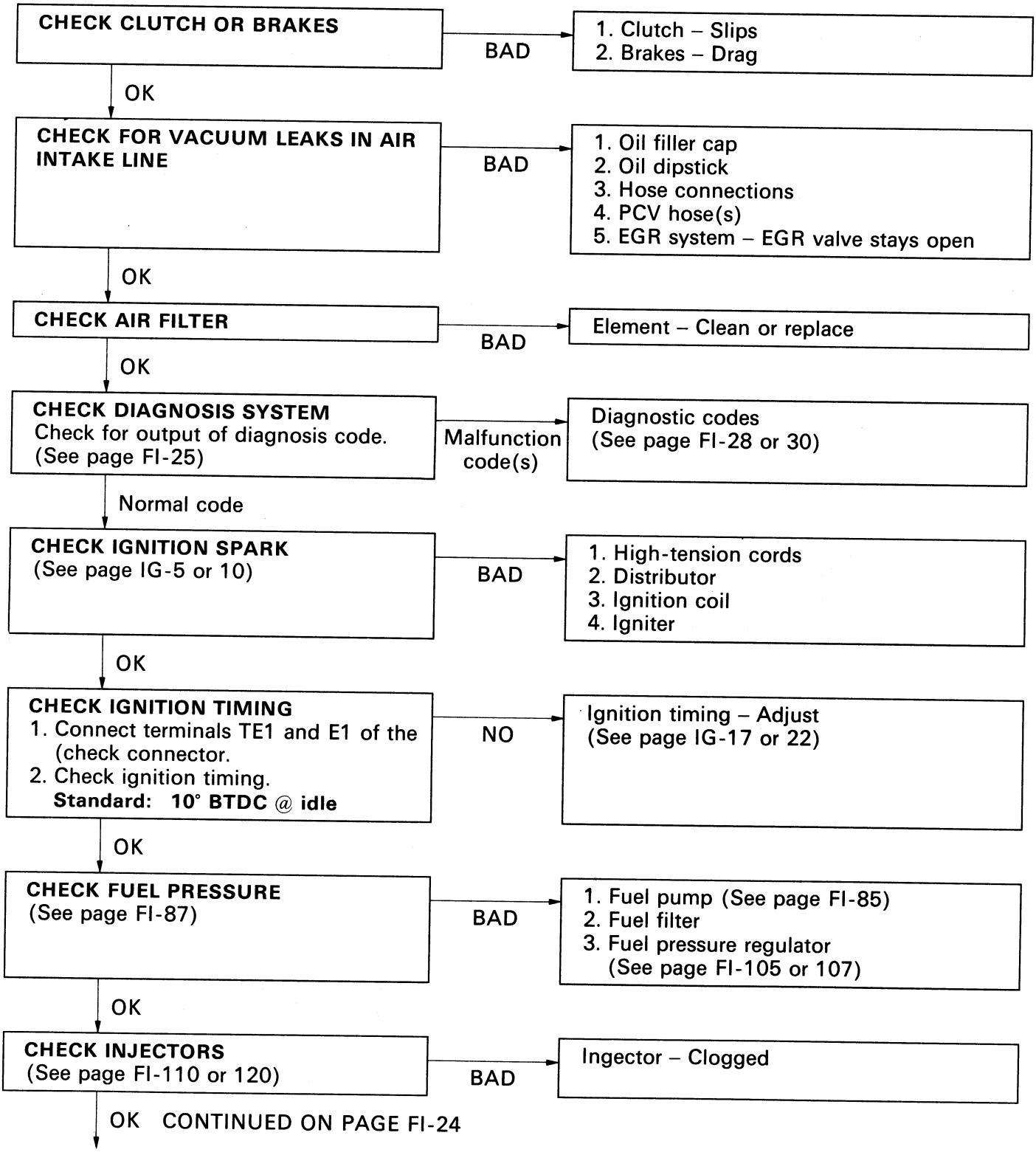

CONTINUED ON PAGE FI-24

OK CONTINUED FROM PAGE FI-23

CHECK SPARK PLUGS
Standard:
3S-GTE 0.8 mm (0.031 in.)
5S-FE 1.1 mm (0.043 in.)
HINT: Check compression pressure and valve clearance if necessary.

NO →
1. Spark plugs (See page IG-6 or 11)
2. Compression pressure (See page EM-25)
Minimum (at 250 rpm):
3S-GTE 9.0 kg/cm² (128 psi, 883 kPa)
5S-FE 10.0 kg/cm² (142 psi, 981 kPa)
3. Valve clearance (Cold)
(See page EM-11 or 15)
Standard:

3S-GTE	**IN**	**0.15 – 0.25 mm (0.006 – 0.010 in.)**
	EX	**0.20 – 0.30 mm (0.008 – 0.012 in.)**
5S-FE	**IN**	**0.19 – 0.29 mm (0.007 – 0.011 in.)**
	EX	**0.28 – 0.38 mm (0.011 – 0.015 in.)**

OK

(3S-GTE)
CHECK T-VIS VALVE
(See page EM-22)
Check if air control valve is open with engine running at 4,200 rpm above.

BAD →
1. T-VIS VSV (See page FI-163)
2. Vacuum leaks

OK

CHECK EFI ELECTRONIC CIRCUIT USING VOLT/OHMMETER
(See page FI-33)

BAD →
1. Wiring connections
2. Power to ECU
   (1) Fusible links
   (2) Fuses
   (3) EFI main relay (See page FI-156)
3. (3S-GTE)
   Air flow meter (See page FI-131)
4. (5S-FE)
   Vacuum sensor (See page FI-170)
5. Water temp. sensor (See page FI-168)
6. Intake air temp. sensor
   (See page FI-131 or 169)
7. Throttle position sensor
   (See page FI-134 or 141)
8. Injection signal circuit
   (1) Injector wiring
   (2) (3S-GTE)
      Solenoid resistor
      (See page FI-159)
   (3) ECU (See page FI-176)

DIAGNOSIS SYSTEM

DESCRIPTION

The ECU contains a built-in, self-diagnosis system detects which troubles within the engine signal network and then flashed a warning on the "CHECK" engine warning light on the instrument panel flashes.

By analyzing various signals shown in the tables (See page 28 or 30) the ECU detects system malfunctions which are related to the various operating parameter sensors or actuator. The ECU stores the failure code associated with the detected failure until the diagnosis system is cleared by removing the EFI fuse with the ignition switch OFF.

A "CHECK" engine warning light on the instrument panel informs the driver that a malfunction has been detected. The light goes off automatically when the malfunction has been cleared.

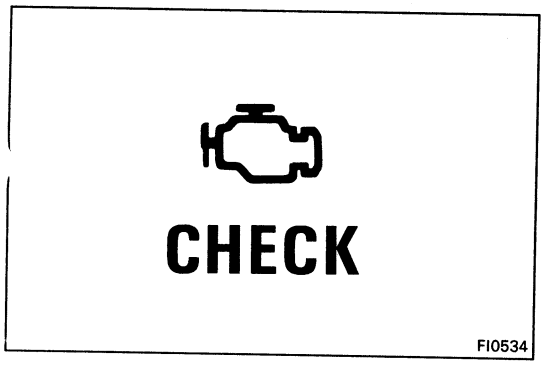

"CHECK" ENGINE WARNING LIGHT CHECK

1. The "CHECK" engine warning light will come on when the ignition switch is placed at ON and the engine is not running.
2. When the engine is started, the "CHECK" engine warning light should go off.

   If the light remains on, the diagnosis system has detected a malfunction or abnormality in the system.

OUTPUT OF DIAGNOSTIC CODES

To obtain an output of diagnostic codes, proceed as follows:

1. Initial conditions
   (a) Battery voltage 11 V or more
   (b) Throttle valve fully closed (throttle position sensor IDL points closed)
   (c) Transmission in neutral position
   (d) Accessories switched OFF
   (e) Engine at normal operating temperature
2. Turn the ignition switch to ON. Do not start the engine.
3. Using SST, connect terminals TE1 and E1 of the check connector.

   SST 09843-18020

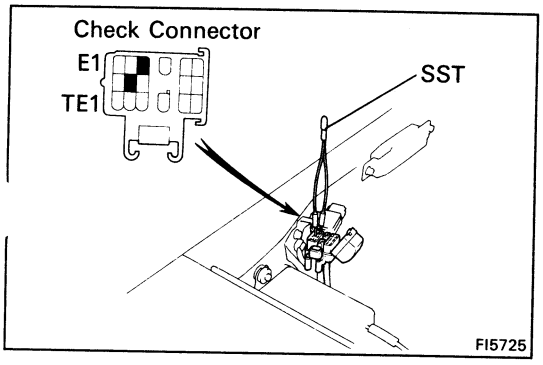

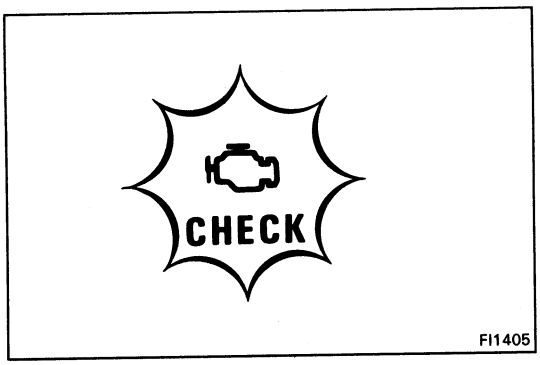

4. Read the diagnostic code as indicated by the number of flashes of the "CHECK" engine warning light.

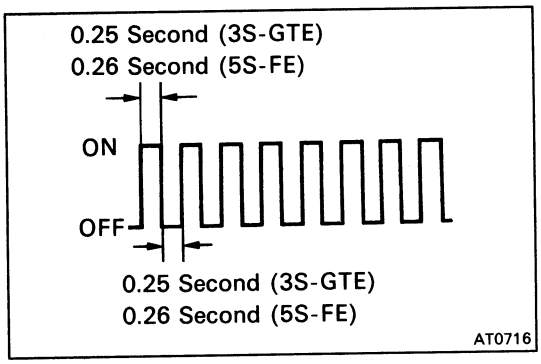

Diagnostic Codes (See page FI-28 or 30)

(a) Normal System Operation (no malfunction)

- The light will alternately blink ON and OFF 2 times per second.

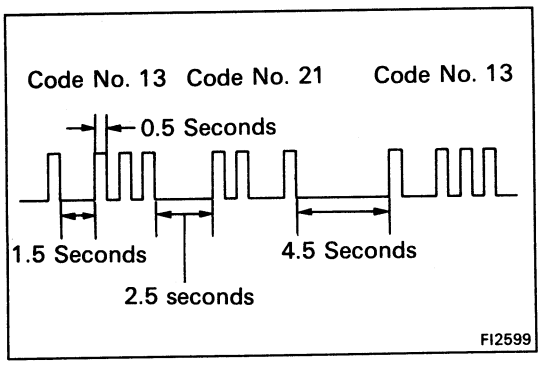

(b) Malfunction Code Indication

- In the event of a malfunction, the light will blink every 0.5 seconds. The first number of blinks will equal the first digit of a 2-digit diagnostic code and, after a 1.5 second pause, the 2nd number of blinks will equal the 2nd. If there are two or more codes, there will be a 2.5 second pause between each.
- After all the codes have been signalled there will be a 4.5 second pause and they will all be repeated as long as the terminals TE1 and E1 of the check connector are shorted.

HINT: In the event of a number of trouble codes, indication will begin from the smaller value and continue in order to the larger.

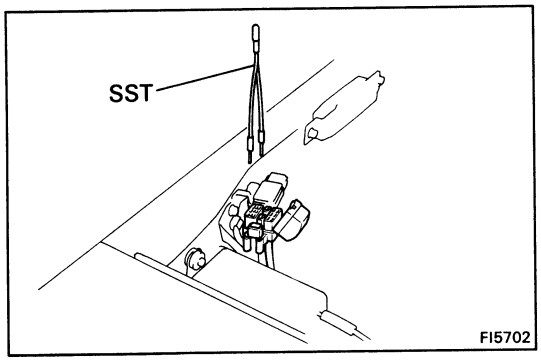

5. After the diagnostic check, remove the SST.
SST 09843-18020

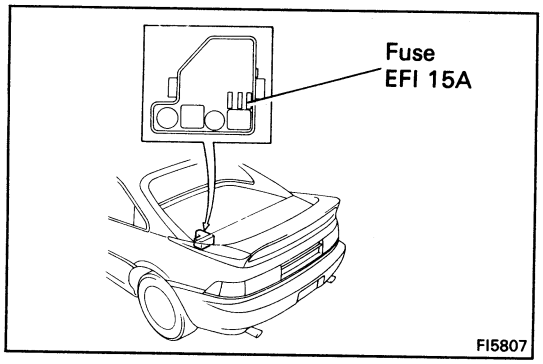

CANCELLING DIAGNOSTIC CODE

1. After repair of the trouble area, the diagnostic code retained in memory by the ECU must be cancelled out by removing the fuse "EFI 15A" for 10 seconds or more, depending on ambient temperature (the lower the temperature, the longer the fuse must be left out) with the ignition switch OFF.

   HINT:
   - Cancellation can also be done by removing the battery negative (–) terminal, but in this case, other memory systems (clock, etc.) will also be cancelled out.
   - If the diagnostic code is not cancelled out, it will be retained by the ECU and appear along with a new code in the event of future trouble.
   - If it is necessary to work on engine components requiring removal of the battery terminal, a check must first be made to see if a diagnostic code has been recorded.

2. After cancellation, perform road test of the vehicle to check that a normal code is now read on the "CHECK" engine warning light.

   If the same diagnostic code appears, it indicates that the trouble area has not been repaired thoroughly.

DIAGNOSIS INDICATION

1. When 2 or more codes are indicated, the lowest number (code) will appear first.

2. All detected diagnostic codes, except code No.51, and No.53 will be retained in memory by the ECU from the time of detection until cancelled out.

3. Once the malfunction is cleared, the "CHECK" engine warning light on the instrument panel will go off but the diagnostic code(s) remain stored in ECU memory (except for code No.51 and No.53).

DIAGNOSTIC CODES (3S-GTE)

Code No.	Number of Engine blinks	System	Diagnosis	Trouble area	See page
–	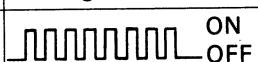 ON OFF FI1401	Normal	This appears when none of the other codes are identified.	–	–
12	FI1389	RPM Signal	No NE or G signal to ECU within 2 seconds after engine has been cranked.	● Distributor circuit ● Distributor ● Starter signal circuit ● ECU	IG-4
13	FI1390	PRM Signal	No NE signal to ECU when engine speed is above 1,000 rpm.	● Distributor ignition coil ● Distributor ● ECU	–
14	FI1391	Ignition Signal	No IGF signal to ECU 8 – 11 times in succession.	● Igniter and ignition coil circuit ● Igniter and ignition coil ● ECU	FI-45
21	FI1400	Oxygen Sensor Signal	During air-fuel ration feedback correction, voltage output from the oxygen sensor does not exceed a set value on the lean side and the rich side continuously for a certain period.	● Oxygen sensor circuit ● Oxygen sensor ● ECU	FI-50
		Oxygen Sensor Heater Circuit	Open or short circuit in oxygen sensor heater.	● Oxygen sensor heater circuit ● Oxygen sensor heater ● ECU	FI-50
22	FI1392	Water Temp. Sensor Signal	Open or short circuit in water temp. sensor signal (THW).	● Water temp. sensor circuit ● Water temp. sensor ● ECU	FI-43
24	FI1611	Intake Air Temp. Sensor Signal	Open or short circuit in intake air temp. sensor signal (THA).	● Intake air temp. sensor circuit ● Intake air temp. sensor ● ECU	FI-42
25	FI2562	Air-fuel Ratio Lean Malfunction	● When air-fuel ratio feedback correction valve or adaptive control value continued at the upper (lean) or lower (rich) limit renewed for a certain period of time. ● When air-fuel ration feedback correction value or adaptive control value feedback frequency is abnormally high during feedback condition. ● Open or short circuit in oxygen sensor signal.	● Injector circuit ● Injector ● Oxygen sensor circuit ● ECU ● Fuel line pressure ● Air flow meter ● Air intake system ● Ignition system	–
26	FI2563	Air-fuel Ration Rich Malfunction		● Injector circuit ● Injector ● Fuel line pressure ● Cold start injector ● Air flow meter ● ECU	–
31	FI1394	Air-flow Meter Signal	Open circuit in VC signal or short circuit between VC and E2 when idle contacts are closed.	● Air flow meter circuit ● Air flow meter ● ECU	FI-40
32	FI1395	Air-flow Meter Signal	Open circuit in E2 or short circuit between VC and VS.	● Air flow meter circuit ● Air flow meter ● ECU	FI-40

DIAGNOSTIC CODES (3S-GTE) (Cont'd)

Code No.	Number of Engine blinks	System	Diagnosis	Trouble area	See page
34	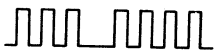 FI3047	Turbocharging Pressure Signal	Excessive turbocharging pressure.	● Turbocharger ● Turbocharging pressure sensor circuit ● Turbocharging pressure sensor ● ECU	–
35	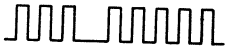 FI3048	Turbocharging Pressure Sensor Signal	Open or short circuit in turbocharging sensor pressure sensor signal (PIM).	● Turbocharging pressure sensor circuit ● Turbocharging pressure sensor ● ECU	FI-48
41	FI1396	Throttle Position Sensor Signal	Open or short circuit in throttle position sensor signal (VTA).	● Throttle position sensor circuit ● Throttle position sensor ● ECU	FI-38
42	FI1397	Vehicle Speed Sensor Signal	No SPD signal for 8 seconds when engine speed is between 2,500 rpm and 5,000 rpm and coolant temp. is below 80°C (176°F) except when racing the engine.	●Vehicle speed sensor circuit ● Vehicle speed sensor ● ECU	–
43	FI1398	Starter Signal	No STA signal to ECU unit engine speed reaches 800 rpm with vehicle not moving.	● Ignition switch circuit ● Ignition switch ● ECU	FI-44
52	FI1618	Knock Sensor Signal	Open or short circuit in knock sensor signal (KNK).	● Knock sensor circuit ● Knock sensor ● ECU	–
53	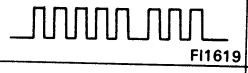 FI1619	Knock Control Signal in ECU	Knock control in ECU faulty	● ECU	–
71	FI2622	EGR Malfunction (CALIF. only)	EGR gas temp. below predetermined level for during EGR control.	● EGR system (EGR valve, EGR hose etc.) ● EGR gas temp. sensor circuit ● EGR gas temp. sensor ● EGR control VSV ● EGR control VSV circuit ● ECU	FI-51
51	FI1399	Switch Condition Signal	No IDL signal or A/C signal to ECU, with the check terminals TE1 and E1 connected.	● A/C switch circuit ● A/C amplifire ● Throttle position sensor circuit ● Throttle position sensor ● Accelerator pedal and cable ● ECU	–

DIAGNOSTIC CODES (5S-FE)

Code No.	Number of "CHECK" engine blinks	System	Diagnosis	Trouble area	See page
–	ON OFF FI1401	Normal	This appears when none of the other codes are identified.	–	–
12	FI1389	RPM Signal	No NE or G signal to ECU within several seconds after engine is cranked.	● Distributor circuit ● Distributor ● Starter signal circuit ● ECU	IG-4
13	FI1390	RPM Signal	No NE signal to ECU when the engine speed is above 1,000 rpm and within 50 msec. after engine is cranked.	● Distributor circuit ● Distributor ● ECU	–
14	FI1391	Ignition Signal	No IGF signal to ECU 4 – 5 times in succession.	● Ignition circuit (+B, IGT, IGF) ● Igniter ● ECU	FI-62 or FI-79
21	FI1609	Oxygen Sensor Signal	During air-fuel ratio feedback correction, voltage output from the oxygen sensor does not exceed a set value on the lean side and the rich side continuously for a certain period.	● Oxygen sensor circuit ● Oxygen sensor ● ECU	FI-66 or FI-83
22	FI1392	Water temp. Sensor Signal	Open or short circuit in water temp. sensor signal (THW).	● Water temp. sensor circuit ● Water temp. sensor ● ECU	FI-60 or FI-77
24	FI1611	Intake air Temp. Sensor Signal	Open or short circuit in intake air temp. sensor signal (THA).	● Intake air temp. sensor circuit ● Intake air temp. sensor ● ECU	FI-59 or FI-76
25	FI2562	Air-fuel Ratio Lean Malfunction	● When FAF (Air fuel compensation ratio) is not removed for a certain period during feedback condition. ● When marked variation is detected in engine revolutions for each cylinder during idle switch on and feedback condition. ● Open or short circuit in oxygen sensor signal.	● Injector circuit ● Injector ● Oxygen sensor circuit ● Oxygen sensor ● ECU ● Fuel line pressure ● Vacuum sensor ● Water temp. sensor ● Ignition system ● ECU	–
26	FI2563	Air-fuel Ratio Rich Malfunction		● Injector circuit ● Injector ● Fuel line pressure ● Cold start injector ● Vacuum sensor ● Water temp. sensor ● ECU	–
*27	FI3294	Sub-Oxygen Sensor Signal	Open or short circuit in sub-oxygen sensor signal (OX2).	● Sub-oxygen sensor circuit ● Sub-oxygen sensor ● ECU	FI-66 or FI-83
31	FI1394	Vacuum Sensor Signal	Open or short circuit in vacuum sensor signal.	● Vacuum sensor circuit ● Vacuum sensor ● ECU	FI-57 or FI-74

* CALIF. only

DIAGNOSTIC CODES (5S-FE) (Cont'd)

Code No	Number of "CHECK" engine blinks	System	Diagnosis	Trouble area	See page
41	FI1396	Throttle Position Sensor Signal	(M/T) IDL and PSW signals being output simultaneously for several seconds. (A/T) Open or short circuit in throttle position sensor signal (VTA).	● Throttle position sensor circuit ● Throttle position sensor ● ECU	FI-56 or FI-72
42	FI1397	Vehicle Speed Sensor Signal	(M/T) No pulse is input from the speed sensor (SP1) bult into the meter during input of a 4-pulse signal from the vehicle speed sensor (SP2) on the transmission (A/T) No SPD signal for several seconds when engine speed is between 2,300 – 5,500 rpm and coolant temp. is below 80°C (176°F) except when racing the engine.	● Vehicle speed sensor circuit ● Vehicle speed sensor ● ECU	–
43	FI1398	Starter Signal	No STA signal to ECU until engine speed reaches 800 rpm with vehicle not moving.	● IG switch circuit ● IG switch ● ECU	FI-61 or FI-78
71	FI2622	EGR Malfunction	EGR gas temp. below 70°C during EGR operation.	● EGR system (EGR valve, EGR hose etc.) ● EGR gas temp. sensor circuit ● EGR gas temp. sensor ● BVSV for EGR ● BVSV for EGR circuit ● ECU	FI-67 or FI-84
51	FI1399	Switch Condition Signal	No IDL signal, NSW signal and STA signal or A/C ON signal to ECU, when the check terminals TE1 and E1 connected with 3 seconds after engine has been cranking.	● A/C switch circuit ● A/C Amplifire ● Throttle position sensor circuit ● Throttle position sensor ● Neutral start switch circuit ● Neutral start switch ● Accelerator pedal and cable ● ECU	–

INSPECTION OF DIAGNOSIS CIRCUIT

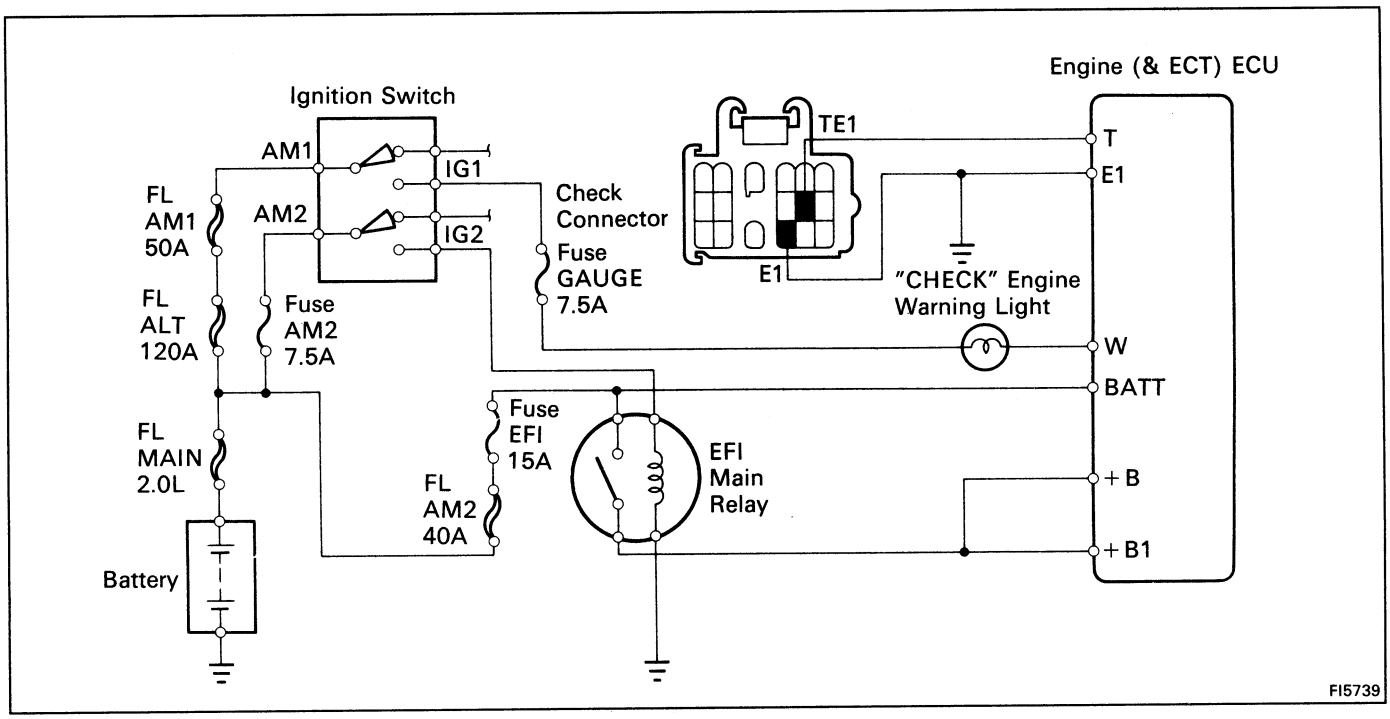

1.

Does "CHECK" engine warning light come on when ignition switch is at ON?
- YES → System Normal
- NO → Does "CHECK" engine warning light come on when ECU terminal W is grounded to the body.
  - YES → Check wiring between ECU terminal E1 and body ground.
    - OK → Try another ECU.
    - BAD → Repair or replace.
  - NO → Check bulb, fuse and wiring between ECU and ignition switch.
    - BAD → Repair or replace.

2.

Does "CHECK" engine warning light go off when the engine is started?
- YES → System Normal
- NO → Check wiring between ECU and "CHECK" engine warning light.
  - BAD → Repair.
  - OK → Is there diagnostic code output when check connector terminal TE1 and E1 are short circuited?
    - NO → Try another ECU.
    - YES → Does "CHECK" engine warning light go out after repair according to malfunction code?
      - NO → Further repair required.
      - YES → System OK → Cancel out diagnostic code.

TROUBLESHOOTING WITH VOLT/OHMMETER

HINT:

- The following troubleshooting procedures are designed for inspection of each separate system, and therefore the actual procedure may vary somewhat. However, troubleshooting should be performed while referring to the inspection methods described in this manual.
- Before beginning inspection, it is best to first make a simple check of the fuses, fusible links and the condition of the connectors.
- The following troubleshooting procedures are based on the supposition that the trouble lies in either a short or open circuit in a components outside the computer or a short circuit within the computer.
- If engine trouble occurs even though proper operating voltage is detected in the computer connector, then it can be assumed that the ECU is faulty and should be replaced.

LOCATION OF FUSES AND FUSIBLE LINKS

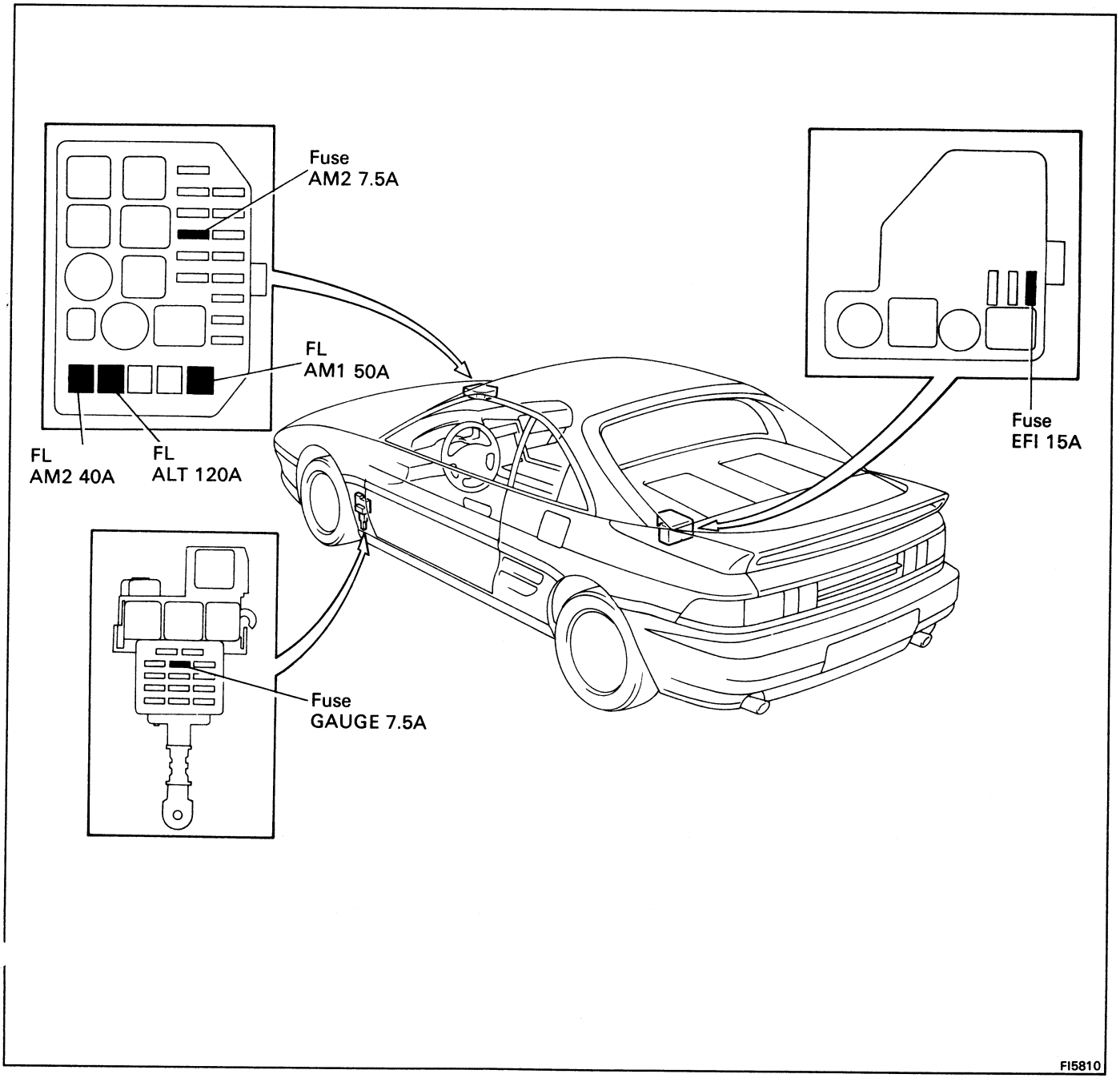

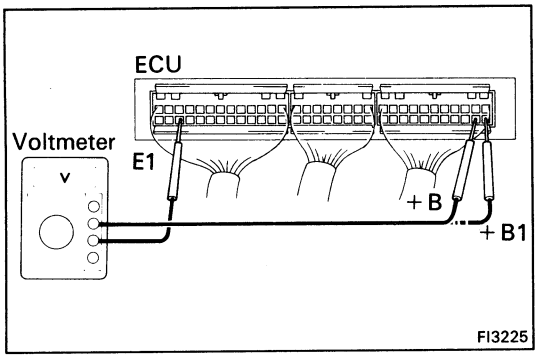

EFI SYSTEM CHECK PROCEDURE (3S-GTE)

HINT:

- Perform all voltage measurements with the connectors disconnected.
- Verify that the battery voltage is 11 V or more when the ignition switch is in "ON" position.

Using a voltmeter with high impedance (10 kΩ/V minimum), measure the voltage at each terminal of the wiring connectors.

Terminals of ECU

Symbol	Terminal	Symbol	Terminal	Symbol	Terminal
E01	POWER GROUND	G2	DISTRIBUTOR	AC1	A/C MAGNET SWITCH
E02	POWER GROUND	G1	DISTRIBUTOR		–
No. 1	INJECTOR (No. 1)	NE	DISTRIBUTOR	SPD	SPEED SENSOR
No. 3	INJECTOR (No. 3)	E1	ENGINE GROUND		–
No. 2	INJECTOR (No. 2)	VF	CHECK CONNECTOR	ABS	ABS ECU
No. 4	INJECTOR (No. 4)	G ⊖	DISTRIBUTOR		–
STJ	COLD START INJECTOR		–		–
EGR	EGR VALVE	T	CHECK CONNECTOR		–
RSC	ISC VALVE	OX1	OXYGEN SENSOR (MAIN)	FPR	FUEL PUMP RELAY
RSO	ISC VALVE	OX2	SUB-OXYGEN SENSOR		–
HT	OXYGEN SENSOR HEATER	KNK	KNOCK SENSOR	W	WARNING LIGHT
	–	PIM	TURBOCHARGING PRESSURE SENSOR		–
	–	THW	WATER TEMP. SENSOR	STP	STOP LIGHT SWITCH
IGT	IGNITER	IDL	THROTTLE POSITION SENSOR	PS	POWER STEERING ECU
TPC1	TURBOCHARGING PRESSURE VSV	THA1	INTAKE AIR TEMP. SENSOR (AIR FLOW METER)		–
	–	VTA	THROTTLE POSITION SENSOR	PSCT	POWER STEERING ECU
	–	VS	AIR FLOW METER	ELS	HEADLIGHT SWITCH DEFOGGER SWITCH
TVIS	T-VIS VSV	THG	EGR GAS TEMP. SENSOR	+B1	EFI MAIN RELAY
	–	VC	SENSOR POWER SOURCE	BATT	BATTERY
FC	CIRCUIT OPENING RELAY	E2	SENSOR GROUND	+B	EFI MAIN RELAY
IGF	IGNITER	STA	STARTER SWITCH		
	–		–		

Engine ECU Terminals

*CALIF. only

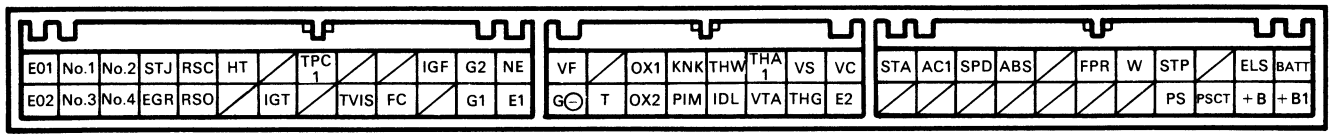

FI2796

Voltage at ECU Wiring Connectors

No.	Terminal	Condition		STD voltage (V)	See page
1	+B, +B1 – E1	IG SW ON		10 – 14	FL-36
2	BATT – E1	–		10 – 14	FI-37
3	IDL – E2	IG SW ON	Throttle valve open	4 – 6	FI-38
	VC – E2		–	4 – 6	
	VTA – E2		Throttle valve fully closed	0.1 – 1.0	
			Throttle valve fully open	3.2 – 4.2	
4	VC – E2		–	4 – 6	FI-40
	VS – E2		Measuring plate fully closed	3.7 – 4.3	
			Measuring plate fully open	0.2 – 0.5	
		Idling (No load)		2.6 – 3.6	
		3,000 rpm (No load)		1.0 – 2.0	
5	No.1, No.2 – E01, No.3 – E02, No.4	IG SW ON		10 – 14	FI-41
6	THA1 – E2	IG SW ON	Intake air temp. 20°C (68°F)	1 – 3	FI-42
7	THW – E2		Coolant temp. 80°C (176°F)	0.1 – 1.1	FI-43
8	STA – E1	Cranking		6 – 14	FI-44
9	IGT – E1	Cranking or idling		0.8 – 1.2	FI-45
10	RSC, RSO – E1	IG SW ON		8 – 14	FI-46
11	W – E1	No trouble (check engine warning light off) and engine running		10 – 14	FI-47
12	PIM – E2	IG SW ON		2.5 – 4.5	FI-48
	VC – E2			4 – 6	
13	AC1 – E1	IG SW ON	Air conditioning ON	8 – 14	FI-49

Engine ECU Terminals

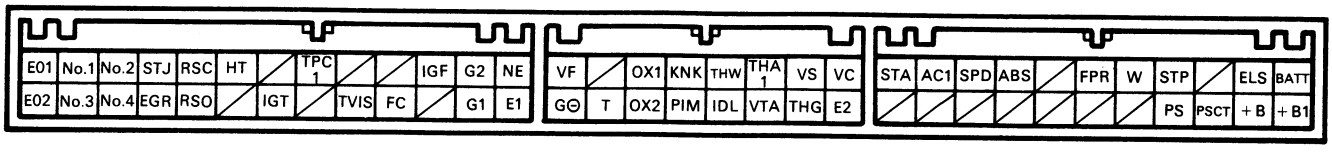

FI2796

No.	Terminals	Trouble	Condition	STD voltage
1	+B +B1 – E1	No voltage	IG SW ON	10 – 14 V

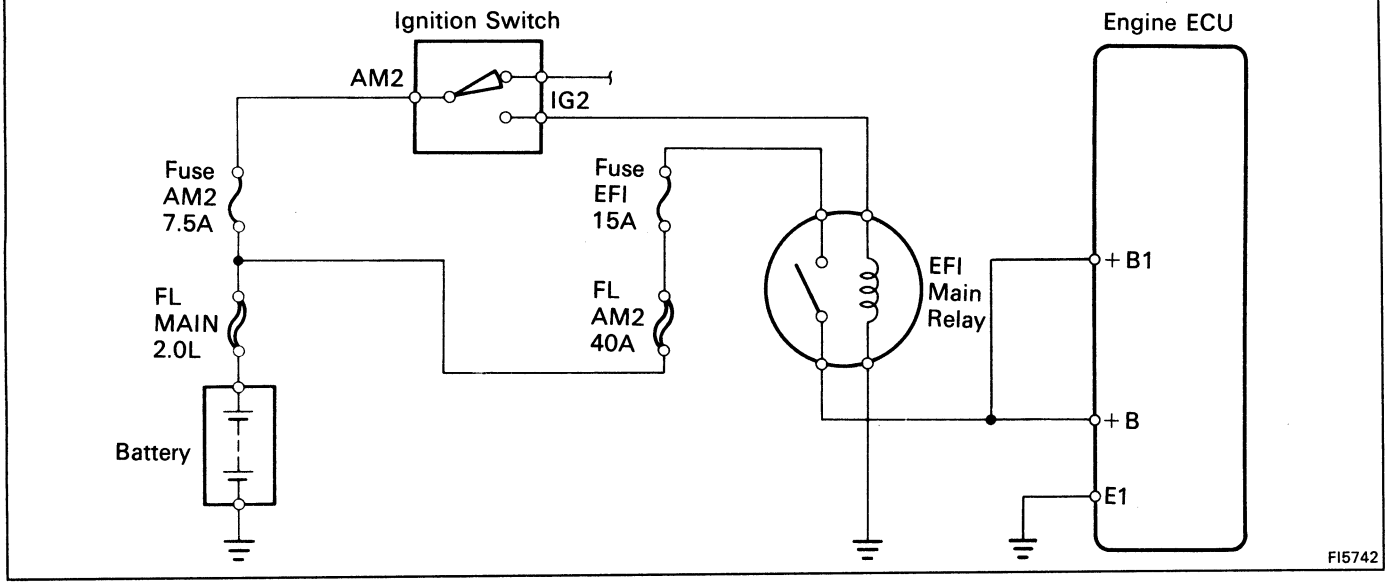

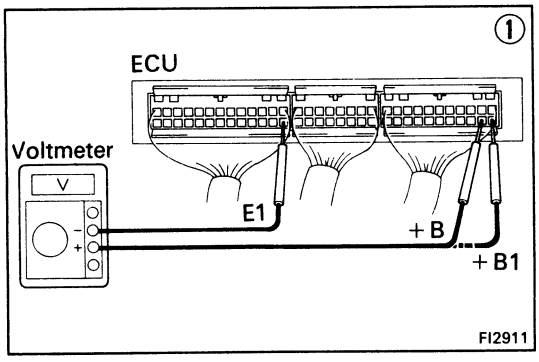

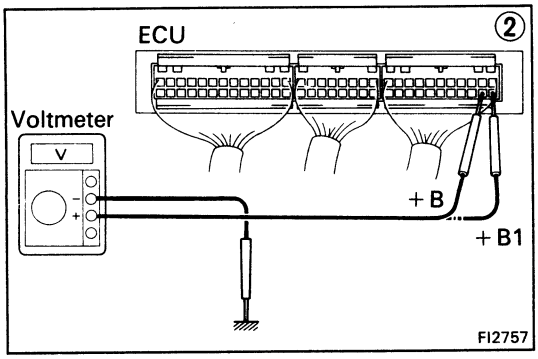

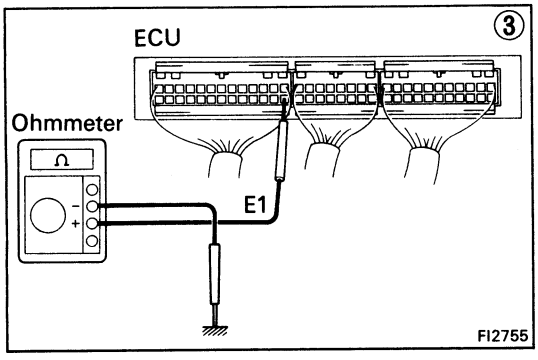

① There is no voltage between ECU terminals +B or +B1 and E1. **(IG SW ON)**

↓

② Check that there is voltage between ECU terminal +B or +B1 and body ground. **(IG SW ON)**

NO → ↓ OK

↓

③ Check wiring between ECU terminal E1 and body ground.

OK → Try another ECU.

BAD → Repair or replace.

↓

Check fuses, fusible links and ignition switch.

BAD → Repair or replace.

↓ OK

↓

Check EFI main relay. (See page FI-156)

BAD → Replace.

↓ OK

↓

Check wiring between EFI main relay and battery.

BAD → Repair or replace.

No.	Terminals	Trouble	Condition	STD voltage
2	BATT – E1	No voltage	–	10 – 14 V

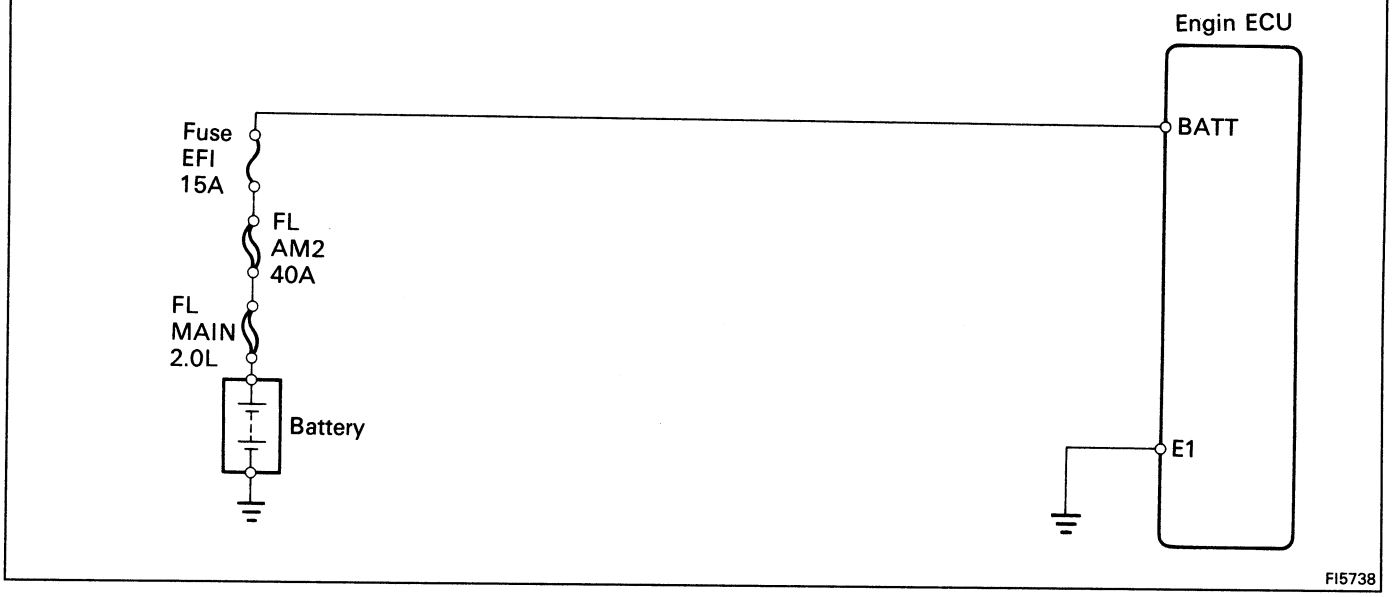

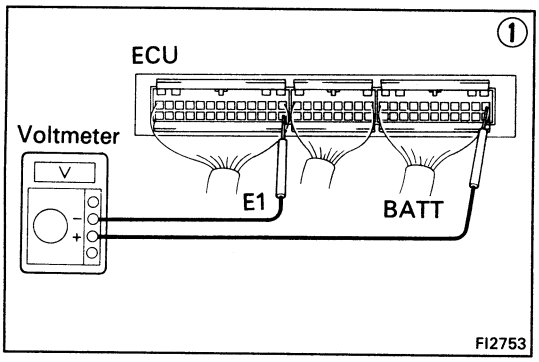

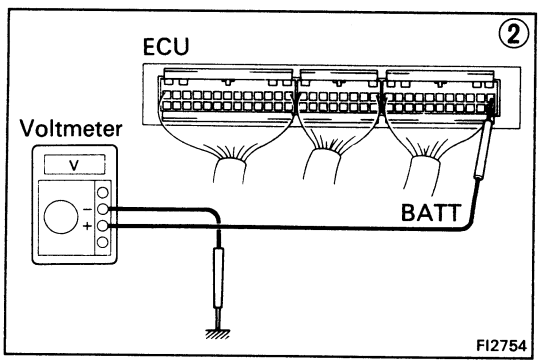

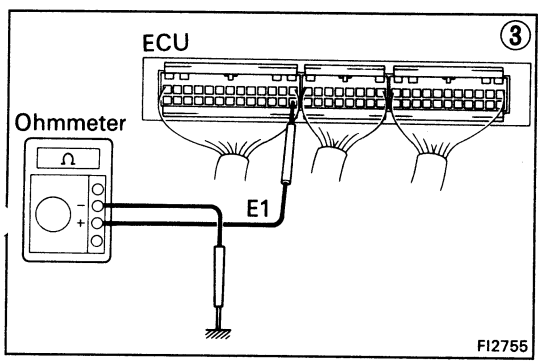

① There is no voltage between ECU terminals BATT and E1.

② Check that there is voltage between ECU terminal BATT and body ground.

NO

OK

③ Check wiring between ECU terminal E1 and body ground.

OK

Try another ECU.

BAD

Repair or replace.

Check fuse and fusible links.

BAD

Replace.

OK

Check wiring between ECU terminal and battery.

BAD

Repair or replace.

No.	Terminals	Trouble	Condition		STD voltage
3	IDL – E2	No voltage	IG SW ON	Throttle valve open	8 – 14 V
	VC – E2			–	4 – 6 V
	VTA – E2			Throttle valve fully closed	0.7 – 1.0 V
				Throttle valve fully open	3.2 – 4.2 V

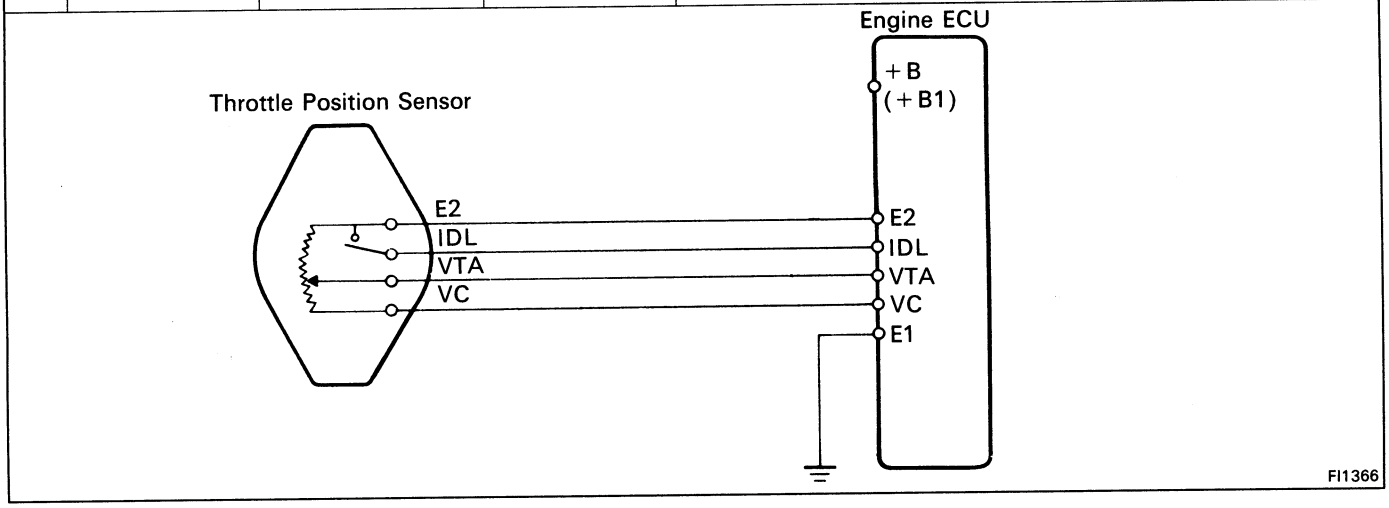

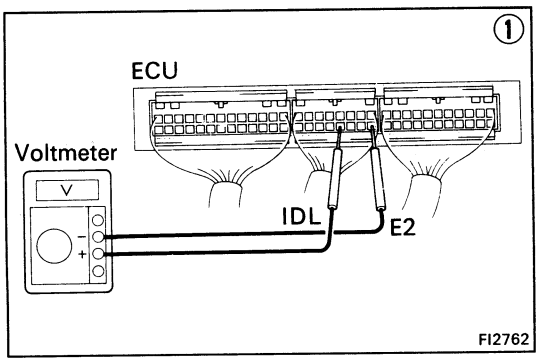

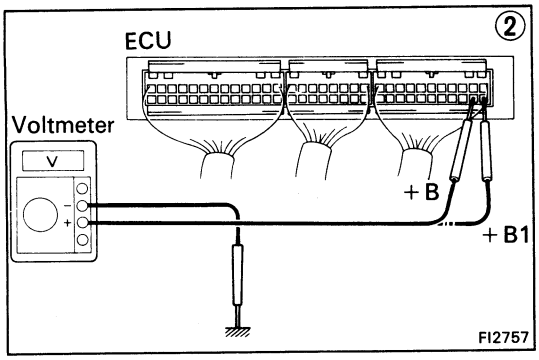

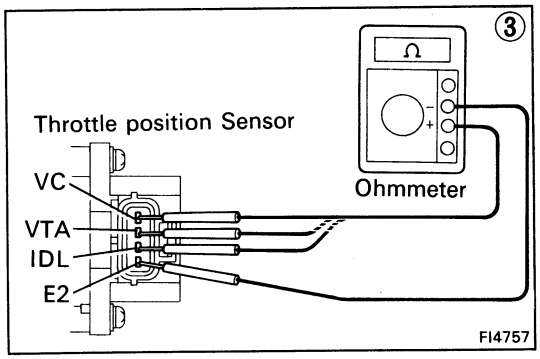

● **IDL – E2**

① There is no voltage between ECU terminals IDL and E2. **(IG SW ON)** (Throttle valve open)

② Check that there is voltage between ECU terminal ECU terminal +B (+B1) and body ground. **(IG SW ON)**

NO

OK

Check wiring between ECU terminal E1 and body ground.

OK

Try another ECU.

BAD

Repair or replace.

Refer to No.1. (See page FI-36)

BAD

Repair or replace.

OK

③ Check throttle position sensor. (See page FI-134)

BAD

Repair or replace throttle position sensor.

OK

Check wiring between ECU and throttle position sensor.

OK

Try another ECU.

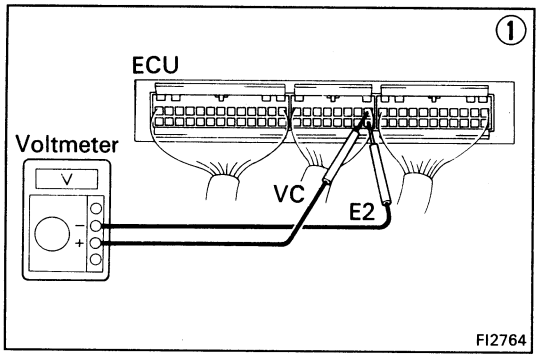

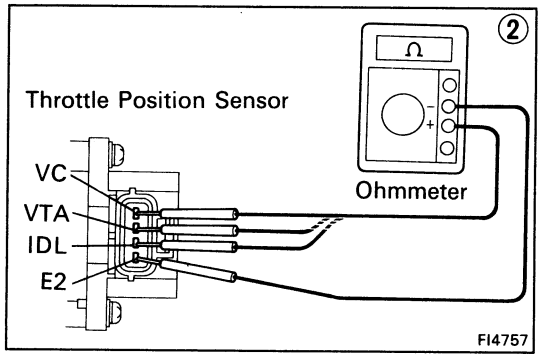

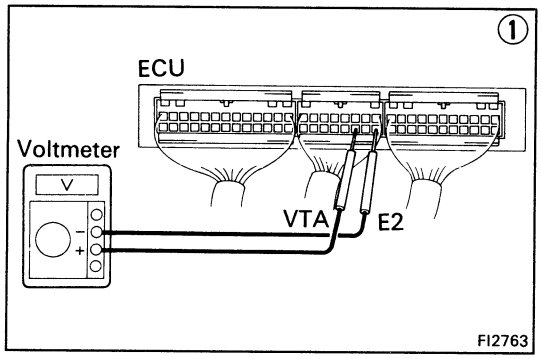

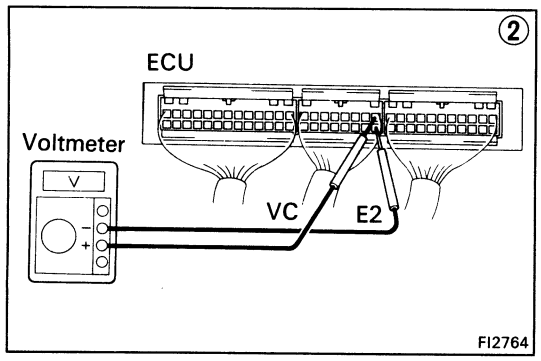

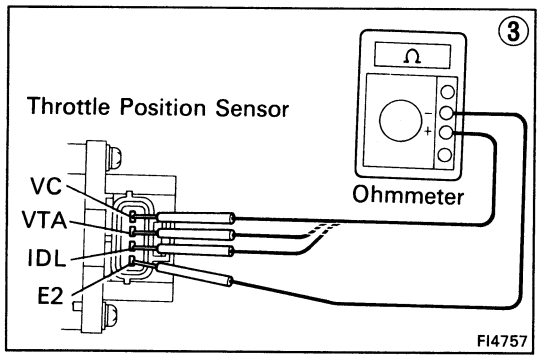

● **VC – E2**

① There is no voltage between ECU terminals VC and E2. **(IG SW ON)**

↓

Check that there is voltage between ECU terminal +B (+B1) and body ground. **(IG SW ON)**

↓ OK

② Check throttle position sensor. (See page FI-134)

↓ BAD

Repair or replace.

↓ OK

Check wiring between ECU and throttle position sensor.

↓ OK

Try another ECU.

NO

Refer to No.1. (See page FI-36)

BAD

Repair or replace wiring.

● **VTA – E2**

① There is no specified voltage at ECU terminals VTA and E2. **(IG SW ON)**

↓

② Check that there is voltage between ECU terminals VC and E2. **(IG SW ON)**

↓ NO

Refer to VC – E2 trouble section.

↓ OK

③ Check throttle position sensor. (See page FI-134)

↓ OK

Check wiring between ECU and throttle position sensor.

↓ OK

Try another ECU.

OK

BAD

Repair or replace.

BAD

Repair or replace.

No.	Terminals	Trouble	Condition		STD voltage
4	VC – E2	No voltage	IG SW ON	–	4 – 6 V
	VS – E2			Measuring plate fully closed	3.7 – 4.3 V
				Measuring plate fully open	0.2 – 0.5 V
			Idling (No load)		2.6 – 3.6 V
			3,000 rpm (No load)		1.0 – 2.0 V

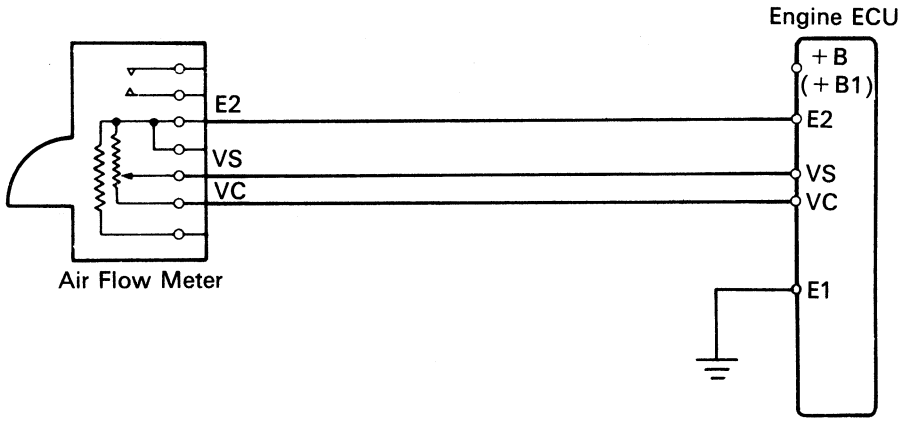

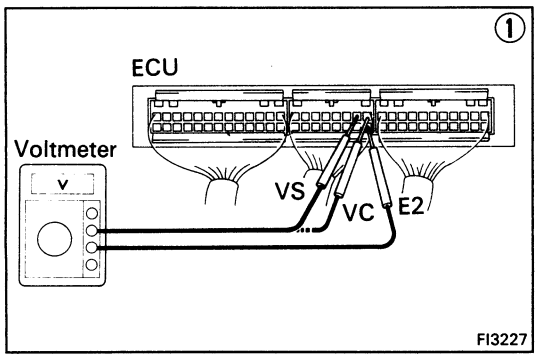

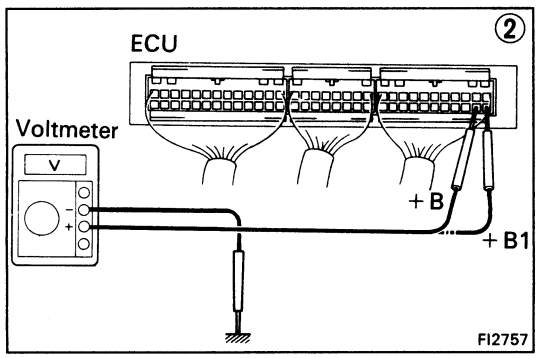

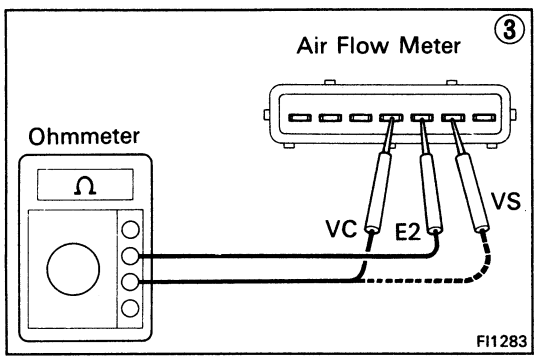

① There is no specified voltage at ECU terminals VC or VS and E2. **(IG SW ON)**

② CHeck that there is voltage between ECU terminal +B (+B1) and body ground. **(IG SW ON)**

OK → Check wiring between ECU terminal E1 and body ground.

NO → Refer to No.1. (See page FI-36)

OK → ③ Check air flow meter. (See page FI-131)

BAD → Repair or replace.

BAD → Repair or replace air flow meter.

OK → Check wiring between ECU and air flow meter.

OK → Try another ECU.

BAD → Repair or replace.

No.	Terminals	Trouble	Condition	STD voltage
5	No. 1 No. 2 – E01 No. 3 – E02 No. 4	No voltage	IG SW ON	10 – 14 V

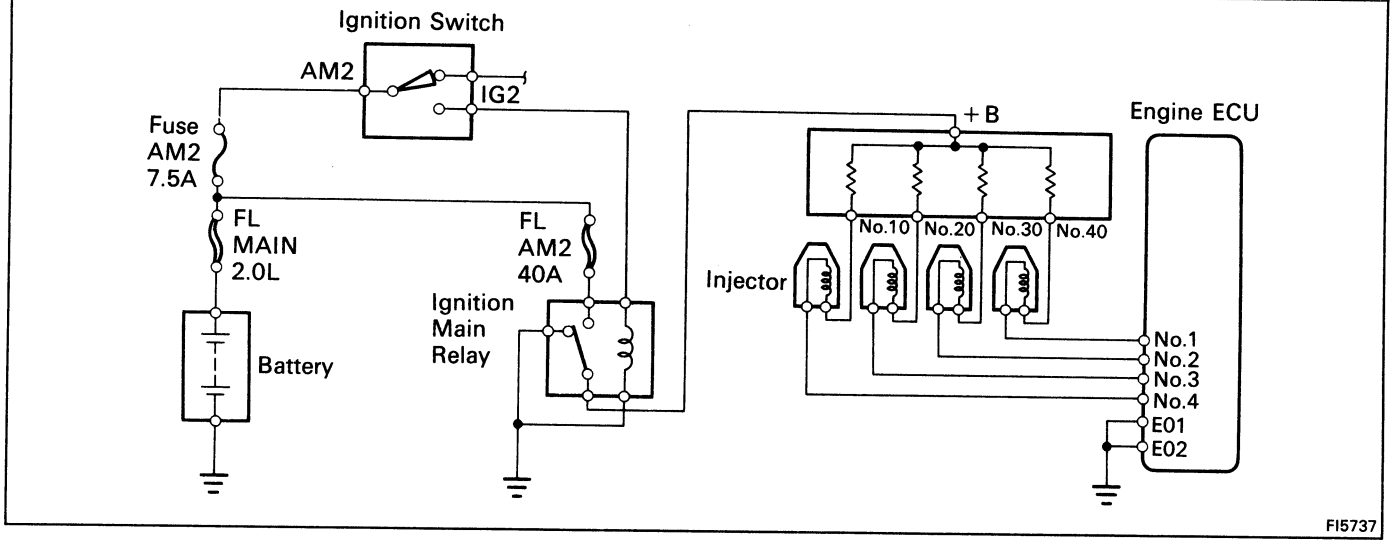

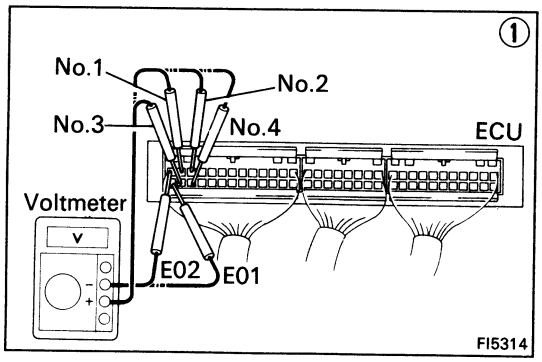

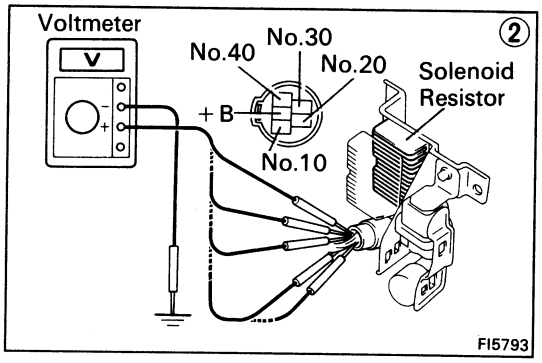

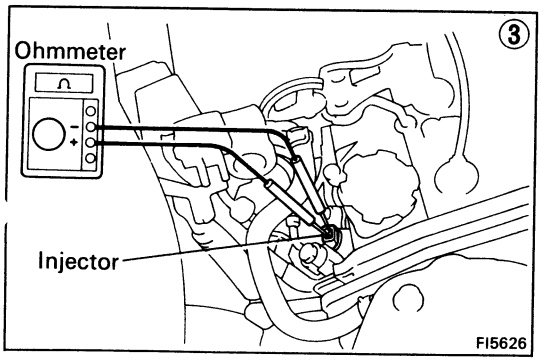

① There is no voltage between ECU terminals No.1, No.2, No.3 and/or No.4 and E01 and/or E02. **(IG SW ON)**

↓

② Check that there is specified voltage between solenoid resistor terminal +B and ground. **STD voltage: 10 – 14 V**

OK ↓ / NO → Check fuses, fusible links, wiring, ignition switch and ignition main relay. → BAD → Repair or replace.

↓

② Check that there is specified voltage between resistor terminals (No.10, No.20, No.30 or No.40) and body ground. **STD voltage: 10 – 14 V**

OK ↓ / NO → Replace resistor.

↓

③ Check resistance of each injector. **STD resistance: 2 – 4 Ω**

OK ↓ / BAD → Replace injector.

↓

Check wiring between ECU and resistor. → BAD → Repair or replace wiring

↓ OK

Try another ECU.

No.	Terminals	Trouble	Condition		STD voltage
6	THA1 – E2	No voltage	IG SW ON	Intake air temperature 20°C (68°F)	1 – 3 V

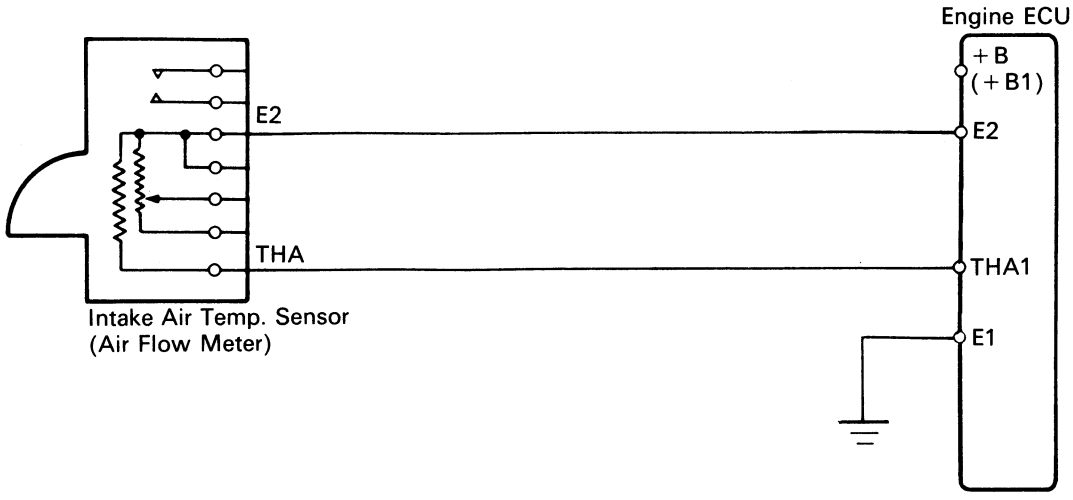

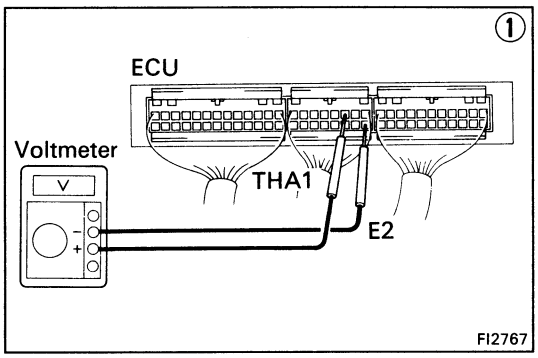

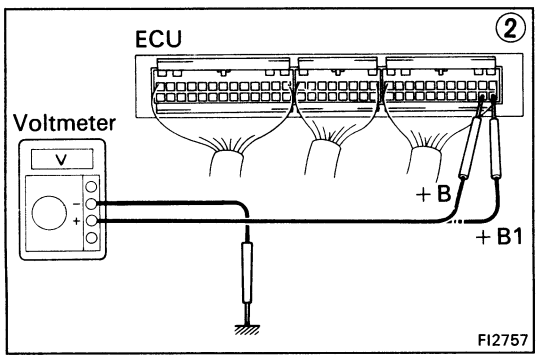

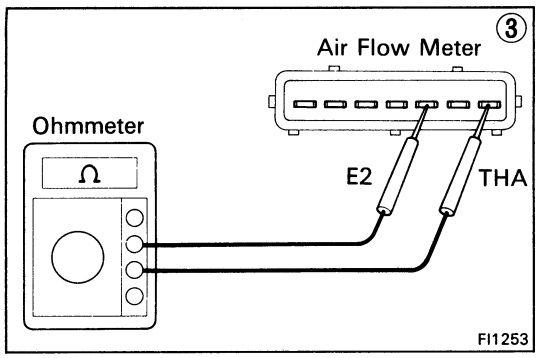

① There is no voltage between ECU terminal THA1 and E2. **(IG SW ON)**

↓

② Check that there is voltage between ECU terminal +B (+B1) and Body ground. **(IG SW ON)**

OK → ↓

NO → Refer No.1. (See page FI-36)

↓

Check wiring between ECU terminal E1 and body ground.

OK → ↓

BAD → Repair or replace.

↓

③ Check intake air temp. sensor. (See page FI-131)

BAD → Replace air flow meter.

OK → ↓

Check wiring between ECU and air temp. sensor.

OK → ↓

Try another ECU.

BAD → Repair or replace.

No.	Terminals	Trouble	Condition		STD voltage
7	THW – E2	No voltage	IG SW ON	Coolant temperature 80°C (176°C)	0.1 – 1.1 V

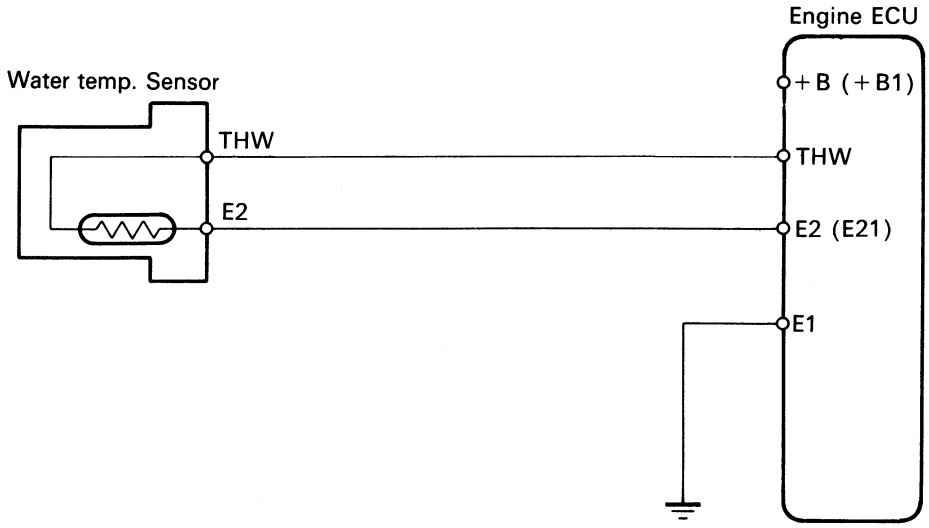

FI3572

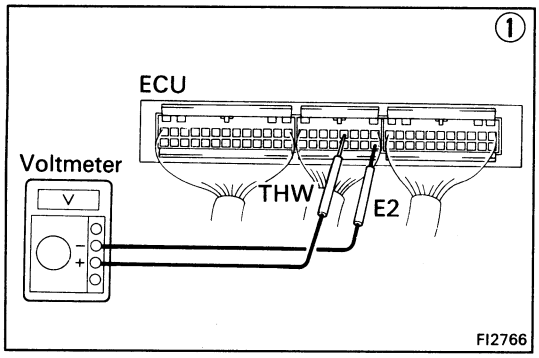

FI2766

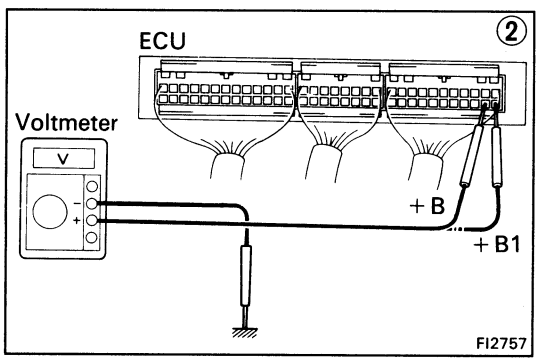

FI2757

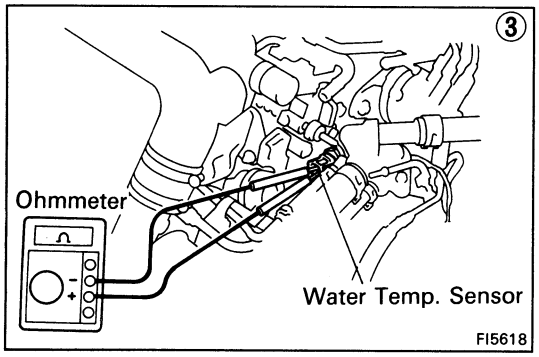

FI5618

① There is no voltage between ECU terminal THW and E2. **(IG SW ON)**

↓

② Check that there is voltage between ECU terminal +B (+B1) and Body ground. **(IG SW ON)**

OK ↓ / NO → Refer No.1. (See page FI-36)

↓

Check wiring between ECU terminal E1 and body ground.

OK ↓ / BAD → Repair or replace.

↓

③ Check water temp. sensor. (See page FI-168)

BAD ↓ Replace water temp. sensor.

OK ↓ Check wiring between ECU and water temp. sensor.

OK ↓ Try another ECU.

BAD → Repair or replace.

No.	Terminals	Trouble	Condition	STD voltage
8	STA – E1	No voltage	Cranking	6 – 14 V

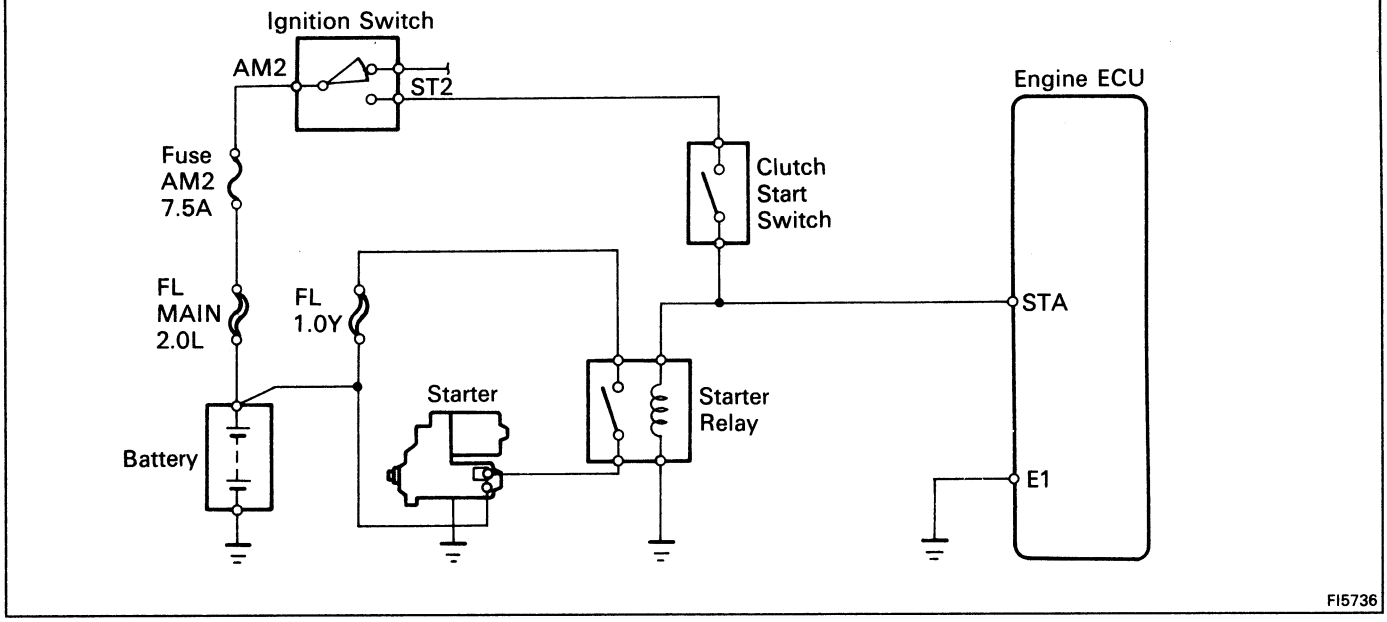

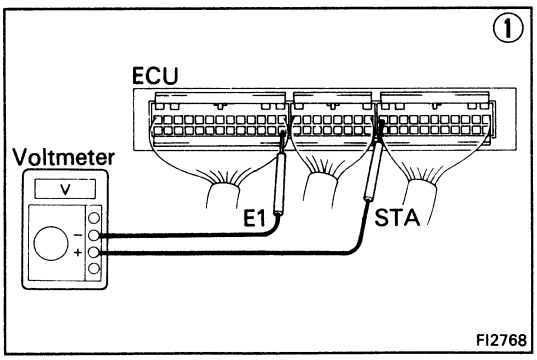

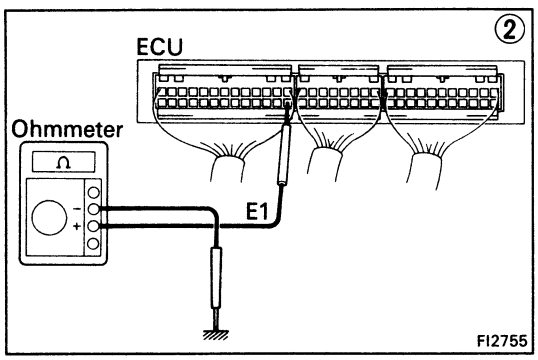

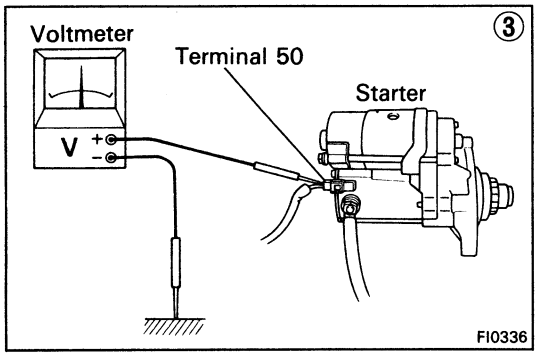

① There is no voltage between ECU terminals STA and E1. **(IG SW ON)**

Check starter operation.
- OK → Check wiring between ECU terminals STA and ignition switch terminal ST2.
  - OK → ② Check wiring between ECU terminal E1 and body ground.
    - OK → Try another ECU.
    - BAD → Repair or replace.
  - BAD → Repair or replace.
- BAD → Check fuse, fusible links, battery, wiring, ignition switch, clutch start switch and starter relay.
  - BAD → Repair or replace.
  - OK → ③ Check that there is voltage at terminal 50 of starter. **(IG SW START) STD voltage: 6 – 14 V**
    - OK → Check starter.
    - NO → Check wiring between ignition switch terminal ST2 and starter terminal 50.

No.	Terminals	Trouble	Condition	STD voltage
9	IGT – E1	No voltage	Idling	0.8 – 1.2 V

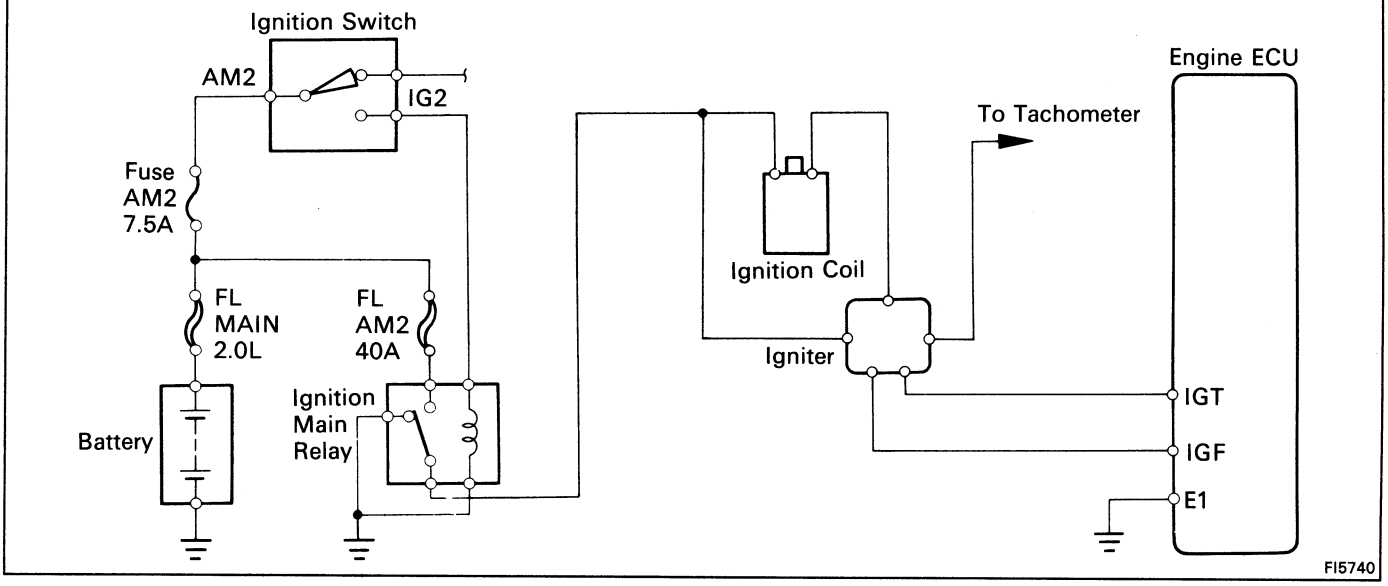

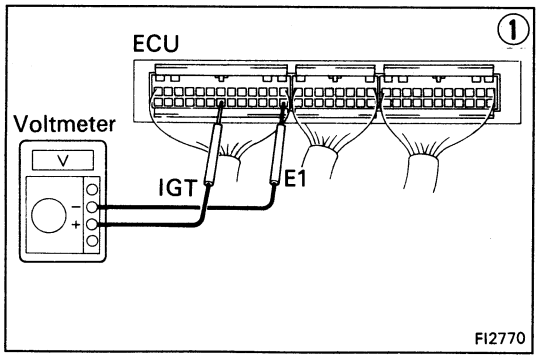

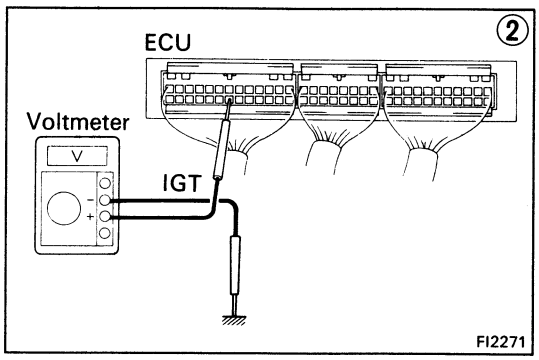

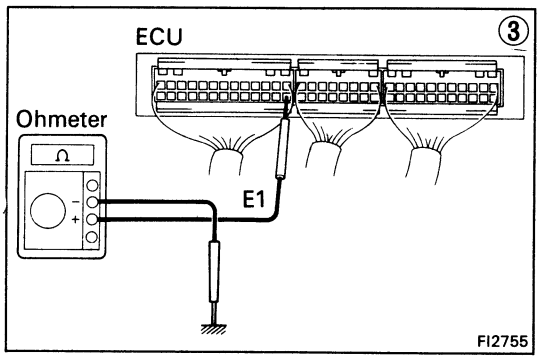

① There is no voltage between ECU terminals IGT and E1. **(Idling)**

↓

② Check that there is voltage between ECU terminal IGT and body ground. **(Idling)**

NO → ③ Check wiring between ECU terminal E1 and body ground. BAD → Repair or Replace.

③ OK → Try another ECU.

② OK → Check fuse, fusible links, ignition switch and ignition main relay. BAD → Repair or replace.

OK → Check distributor. (See page IG-9) BAD → Repair or replace.

OK → Check wiring between ECU and battery. BAD → Repair or replace.

OK → Check igniter. (See page IG-9) BAD → Repair or replace.

No.	Terminals	Trouble	Condition	STD voltage
10	RSC RSO – E1	No voltage	IG SW ON	8 – 14 V

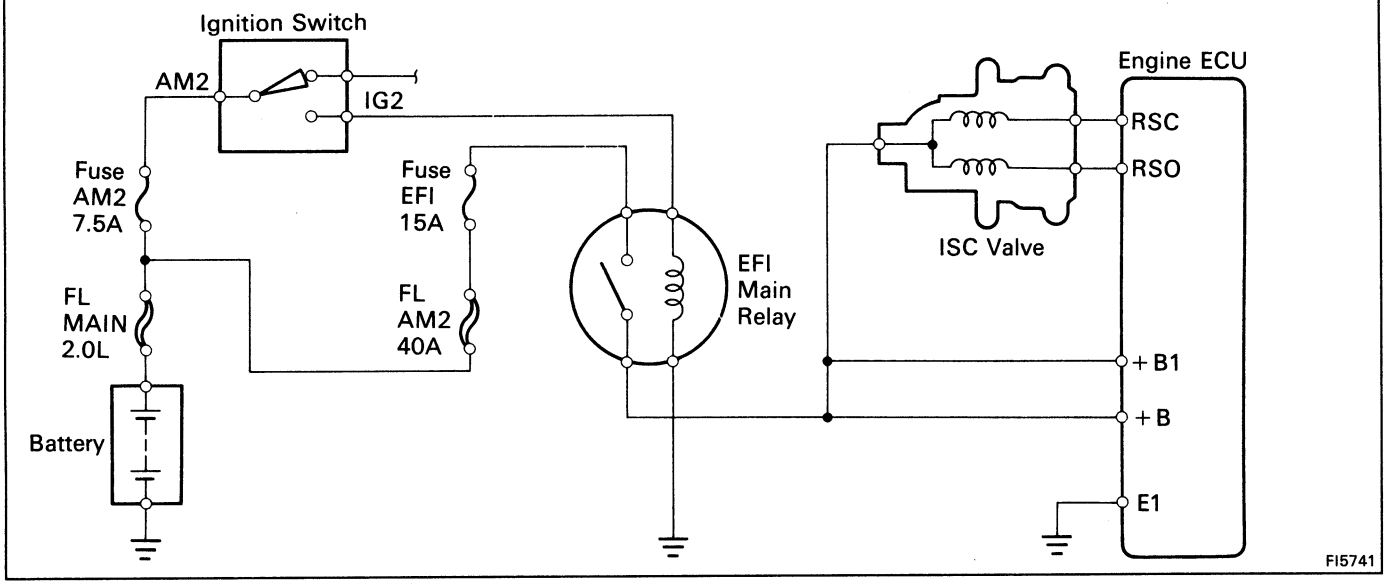

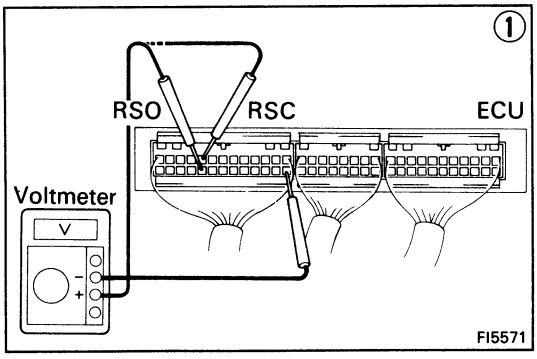

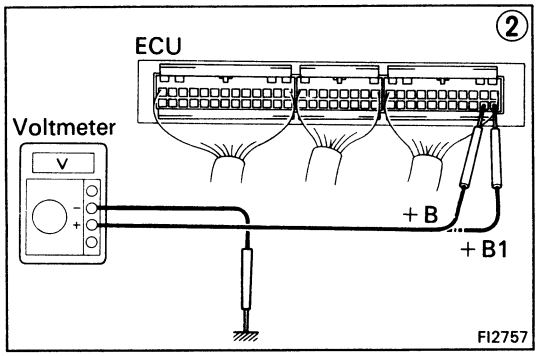

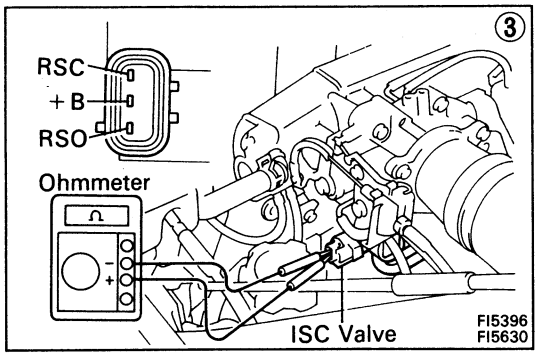

① There is no voltage between ECU terminals RSC or RSO and E1. **(IG SW ON)**

↓

② Check that there is voltage between ECU terminal +B (+B1) and body ground. **(IG SW ON)**

ON ↓

NO → Refer to No.1. (See page FI-36)

↓

③ Check resistance between ISC valve terminals +B and RSC or RSO. **STD resistance: 17.7 – 23.9 Ω**

BAD → Replace ISC valve.

OK ↓

Check wiring between ECU and ISC valve.

BAD → Repair or replace wiring.

OK ↓

Try another ECU.

No.	Terminals	Trouble	Condition	STD voltage
11	W – E1	No voltage	No trouble ("CHECK" engine warning light off) and engine running.	10 – 14 V

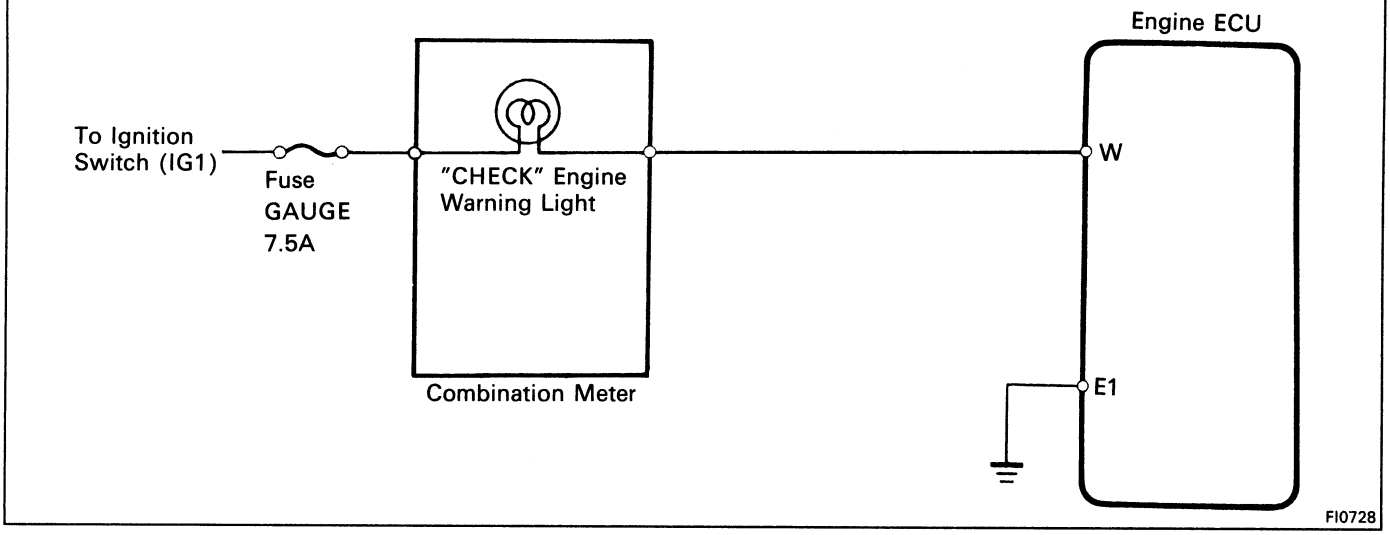

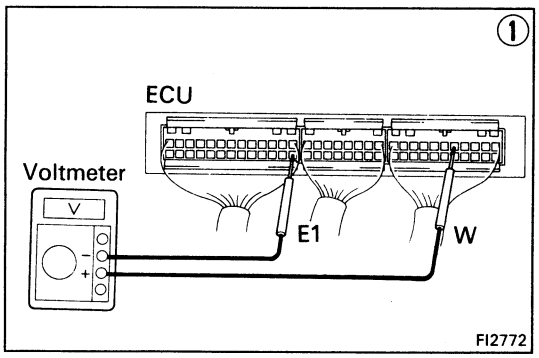

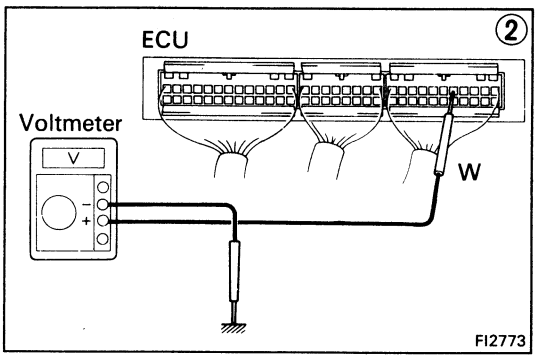

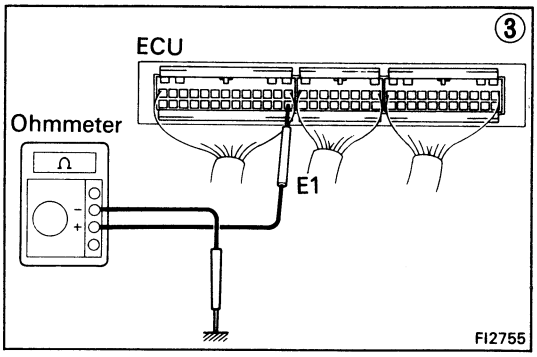

① There is no voltage between ECU terminals W and E1. **(Idling)**

↓

② Check that there is voltage between ECU terminal W and body ground.

NO → ↓ OK

③ Check wiring between ECU terminal E1 and body ground.

OK → Try another ECU.

BAD → Repair or replace.

↓

Check fuse GAUGE (7.5A) and check engine warning light.

OK → ↓ BAD → Repair or replace.

Fuse blows again → ↓

Check wiring between ECU terminal W and fuse.

BAD → Repair or replace.

No.	Terminals	Trouble	Condition	STD voltage
12	PIM – E2	No voltage	IG SW ON	2.5 – 4.5 V
	VC – E2			4 – 6 V

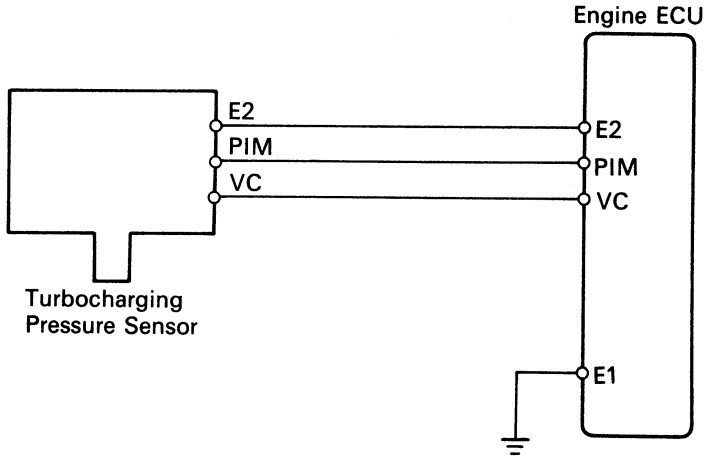

FI1226

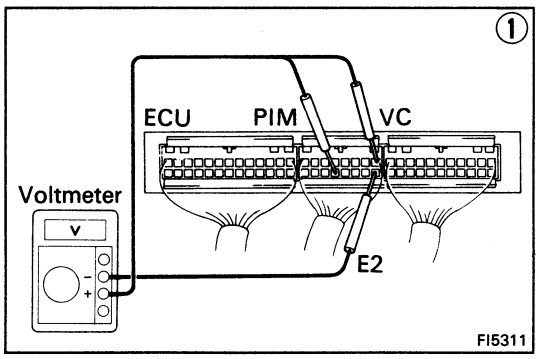

FI5311

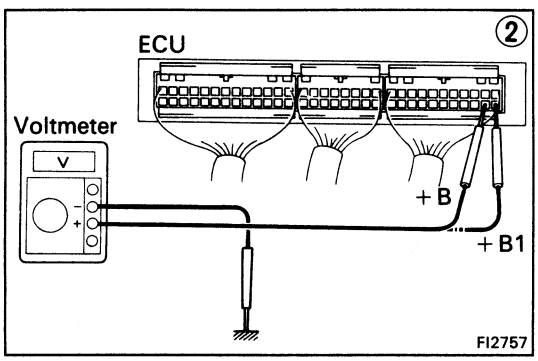

FI2757

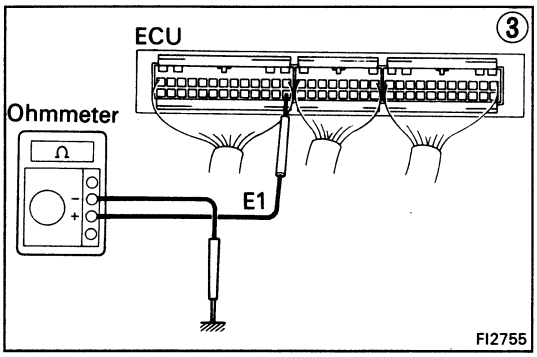

FI2755

• PIM – E2, VC – E2

① There is no voltage between ECU terminals PIM or VC and E2. **(IG SW ON)**

↓

② Check that there is voltage between ECU terminal +B or +B1 and body ground. **(IG SW ON)**

OK → ↓

NO → Refer to No.1. (See page FI-36)

↓

③ Check wiring between ECU terminal E1 and body ground.

OK → ↓

BAD → Repair or replace.

↓

Check turbocharging pressure sensor. (See page FI-171)

BAD → Replace turbocharging pressure sensor.

OK → ↓

Check wiring between ECU and turbocharging pressure sensor.

OK → ↓

BAD → Repair or replace.

↓

Try another ECU.

No.	Terminal	Trouble	Condition	STD voltage
13	AC1 – E1	No voltage	Air conditioning ON	8 – 14 V

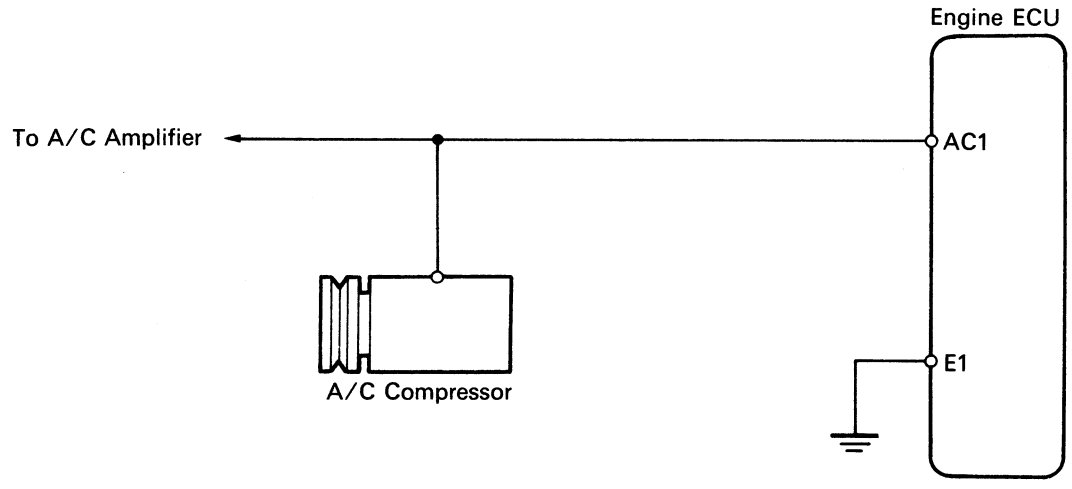

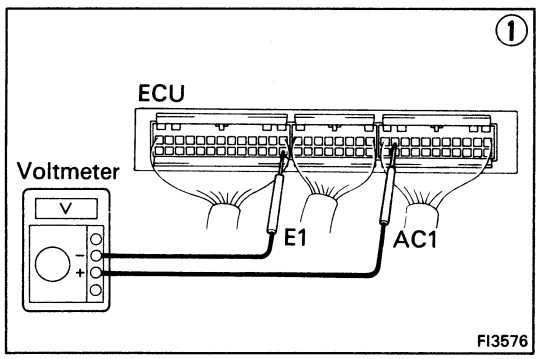

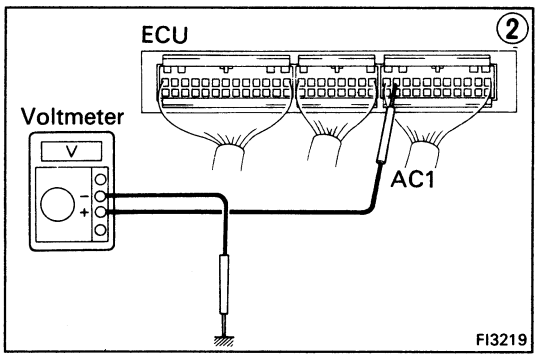

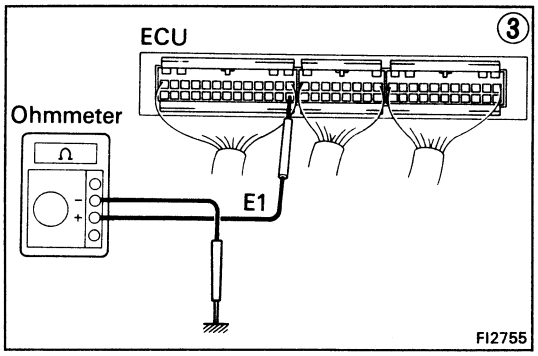

① There is no voltage between ECU terminals AC1 and E1. **(Air conditioning ON)**

② Check that there is voltage between ECU terminal AC1 and body ground.

NO

OK

③ Check wiring between ECU terminal E1 and body ground.

OK

Try another ECU.

BAD

Repair or replace.

Check compressor running.

OK

Check wiring between ECU terminal AC1 and amplifier.

BAD

Repair or replace.

BAD

Check that there is voltage between amplifier terminal and body ground.

BAD

Repair or replace.

OK

Check wiring between amplifier and ECU or compressor.

BAD

Repair or replace.

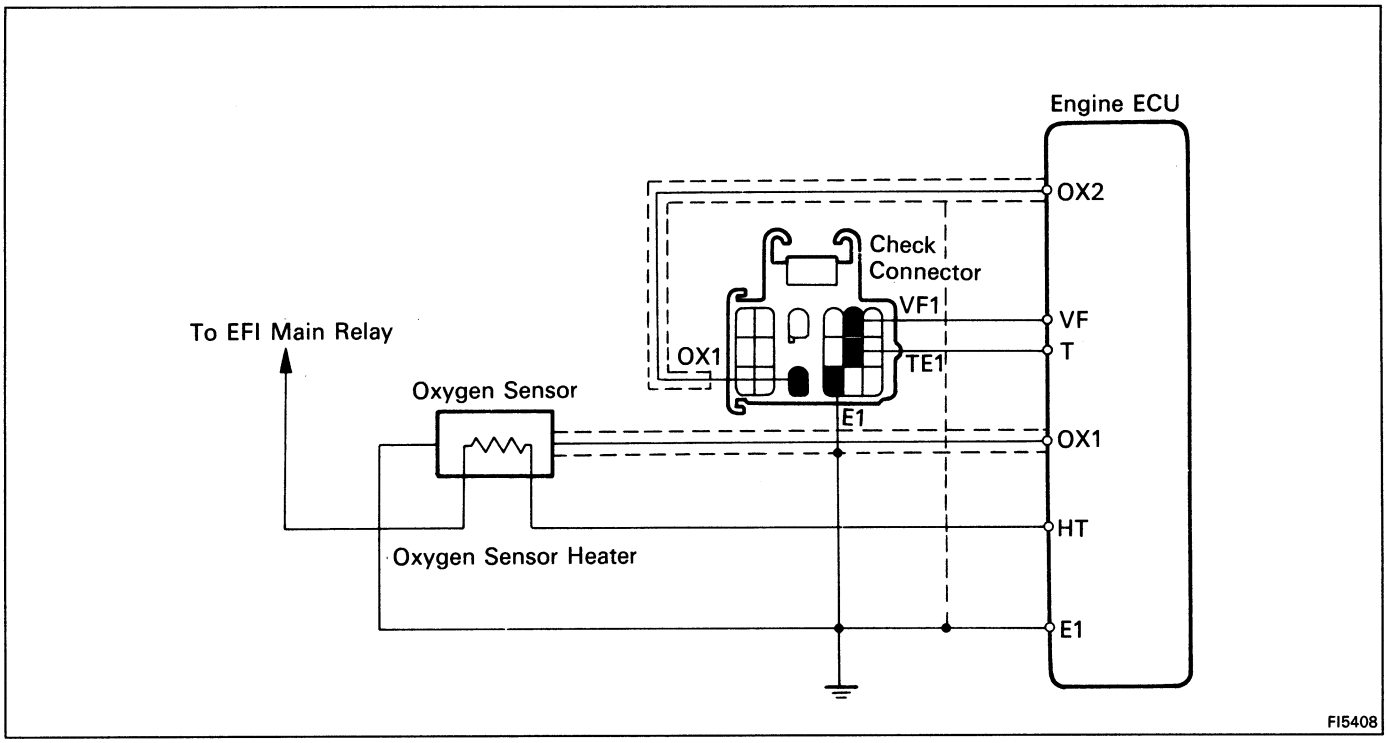

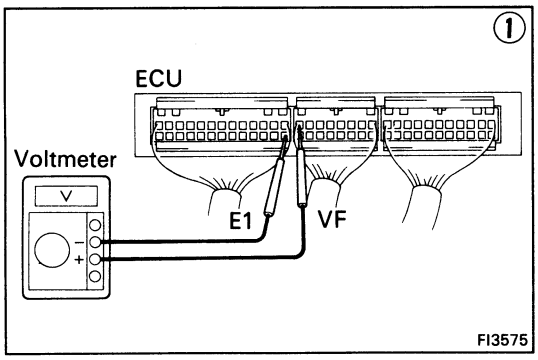

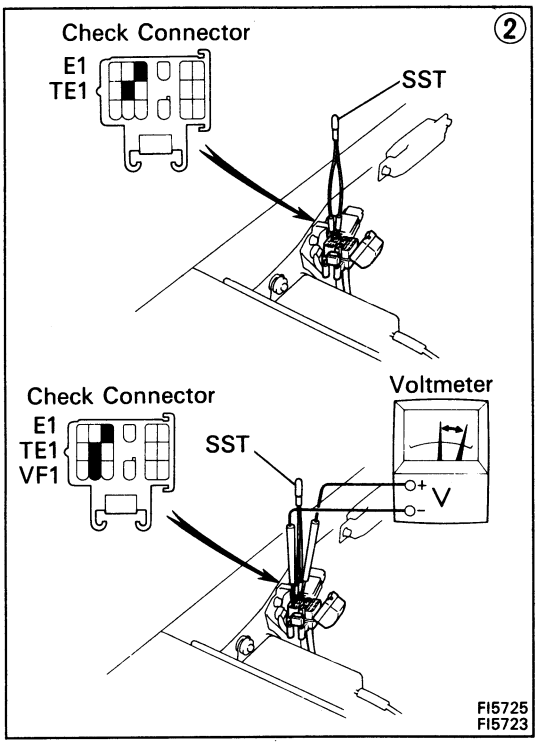

① There is no voltage between ECU terminals VF and E1.

Check that there is voltage between ECU terminal VF and body ground.

NO → OK: Check wiring between ECU terminal E1 and body ground.

- OK → Try another ECU. → BAD: Repair or replace.

Is air leaking into air induction system?
- BAD: Repair air leak.
- OK ↓

Check spark plugs. (See page IG-6)
- BAD: Repair or replace.
- OK ↓

Check distributor and ignition system. (See page IG-4)
- BAD: Repair or replace.
- OK ↓

Check fuel pressure. (See page FI-87)
- BAD: Repair or replace.
- OK ↓

Check injectors. (See page FI-110)
- BAD: Repair or replace.
- OK ↓

* Check cold start injector. (See page FI-99)
- BAD: Repair or replace.
- OK ↓

Check air flow meter. (See page FI-131)
- BAD: Repair or replace.
- OK ↓

② Check operating of oxygen sensor. (See page FI-173)
- BAD: System normal
- BAD ↓

Check wiring between oxygen sensor and ECU.
- BAD: Repair wiring.
- OK ↓

Replace oxygen sensor.

* Rich malfunction only

CALIF. only

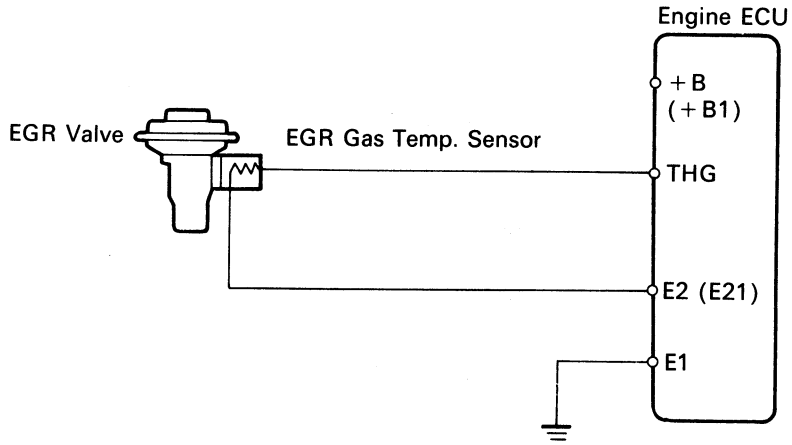

FI2680

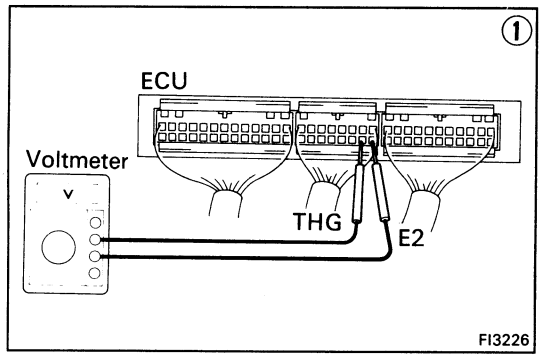

FI3226

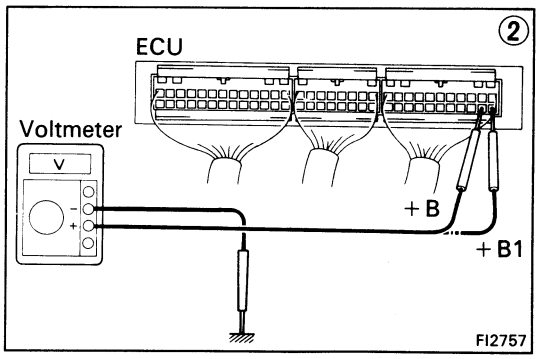

FI2757

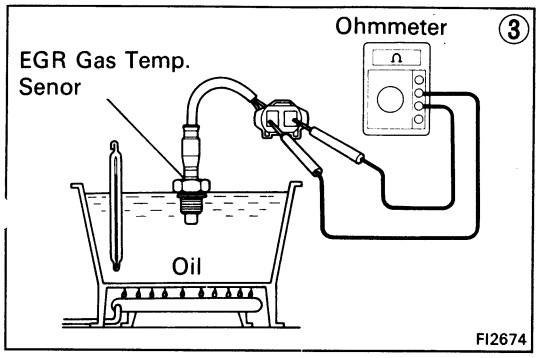

FI2674

① There is no voltage between ECU terminals THG and E2. **(IG SW ON)**

② Check that there is voltage between ECU terminal +B (+B1) and body ground. **(IG SW ON)**

OK

NO → Refer to No.1. (See page FI-36)

Check wiring between ECU terminal E1 and body ground.

OK

BAD → Repair or replace.

Check EGR system. (See page EC-8)

BAD → Repair or replace.

OK

③ Check EGR gas temp. sensor. (See page FI-172)

BAD → Replace EGR gas temp. sensor.

OK → Check wiring between ECU and EGR gas temp. sensor.

OK → Try another ECU.

BAD → Repair or replace

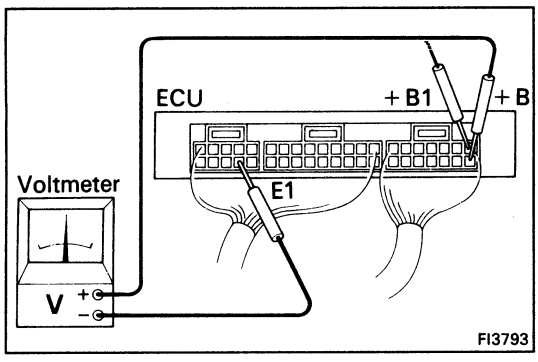

EFI SYSTEM CHECK PROCEDURE (5S-FE M/T)

HINT:

- Perform all voltage measurements with the connectors disconnected.
- Verify that the battery voltage is 11 V or more when the ignition switch is in "ON" position.

Using a voltmeter with high impedance (10 kΩ/V minimum), measure the voltage at each terminal of the wiring connectors.

Terminals of ECU

Symbol	Terminal	Symbol	Terminal	Symbol	Terminal
E01	POWER GROUND	G⊖	DISTRIBUTOR	PSCT	POWER STEERING ECU
E02	POWER GROUND	E21	SENSOR GROUND	PS	POWER STEERING ECU
No.10	INJECTOR	C1	DISTRIBUTOR	B/K	STOP LIGHT SWITCH
No.20	INJECTOR	NE	DISTRIBUTOR		-
STA	STARTER SWITCH	IGF	IGNITER	ELS	HEADLIGHT AND DEFOGGER
IGT	IGNITER	* THG	EGR GAS TEMP. SENSOR	SPD	SPEED SENSOR
STJ	COLD START INJECTOR	T	CHECK CONNECTOR	FC	CIRCUIT OPENING RELAY
E1	ENGINE GROUND	IDL	THROTTLE POSITION SENSOR	A/C	A/C COMPRESSOR
FPU	FUEL PRESSURE VSV	THA	INTAKE AIR TEMP. SENOR	VF	CHECK CONNECTOR
EGR	EGR VSV	VC	VACUUM SENSOR		-
ISCC	ISC VALVE	PIM	VACUUM SENSOR	BATT	BATTERY
ISCO	ISC VALVE	PSW	THROTTLE POSITION SENSOR	W	WARNING LIGHT
OX1	OXYGEN SENSOR (MAIN)	THW	WATER TEMP. SENSOR	+B1	EFI MAIN RELAY
* OX2	SUB-OXYGEN SENSOR	E2	SENSOR GROUND	+B	EFI MAIN RELAY

Engine ECU Terminals

* CALIF. only

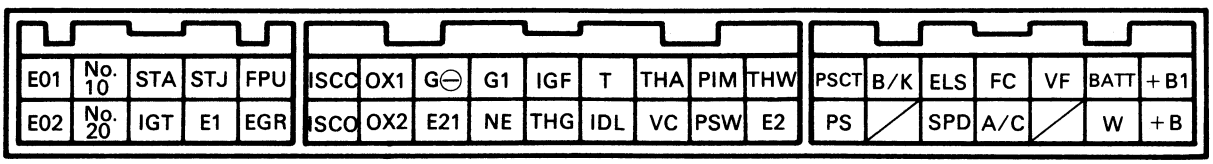

FI4065

Voltage at ECU Wiring Connectors

No.	Terminals	Condition		STD voltage (V)	See page
1	+B, +B1 – E1	IG SW ON		10 – 14	FI-54
2	BATT – E1	–		10 – 14	FI-55
3	IDL – E1	IG SW ON	Throttle valve open	8 – 14	FI-56
	PSW – E1		Throttle valve fully closed (Throttle opener must be cancelled first)	4.5 – 5.5	
4	PIM – E2	IG SW ON		3.3 – 3.9	FI-57
	VC – E2			4.5 – 5.5	
5	No.10, No.20 – E01, E02			10 – 14	FI-58
6	THA – E2	IG SW ON	Intake air temp. 20°C (68°F)	1.7 – 3.1	FI-59
7	THW – E2		Coolant temp. 80°C (176°F)	0.3 – 0.8	FI-60
8	STA – E1	Cranking		6 – 14	FI-61
9	IGT – E1	Cranking or idling		0.8 – 1.2	FI-62
10	ISCC, ISCO – E1	IG SW ON		8 – 14	FI-63
11	W – E1	No trouble ("CHECK" engine warning light off) and engine running		10 – 14	FI-64
12	A/C– E1	IG SW ON	Air conditioning ON	8 – 14	FI-65

Engine ECU Terminals

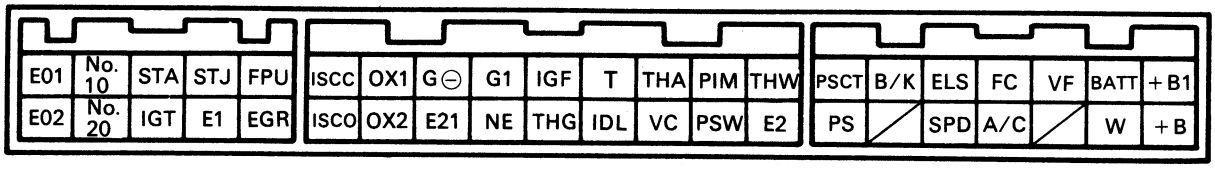

FI4065

No.	Terminals	Trouble	Condition	STD voltage
1	+B +B1 – E1	No voltage	IG SW ON	10 – 14 V

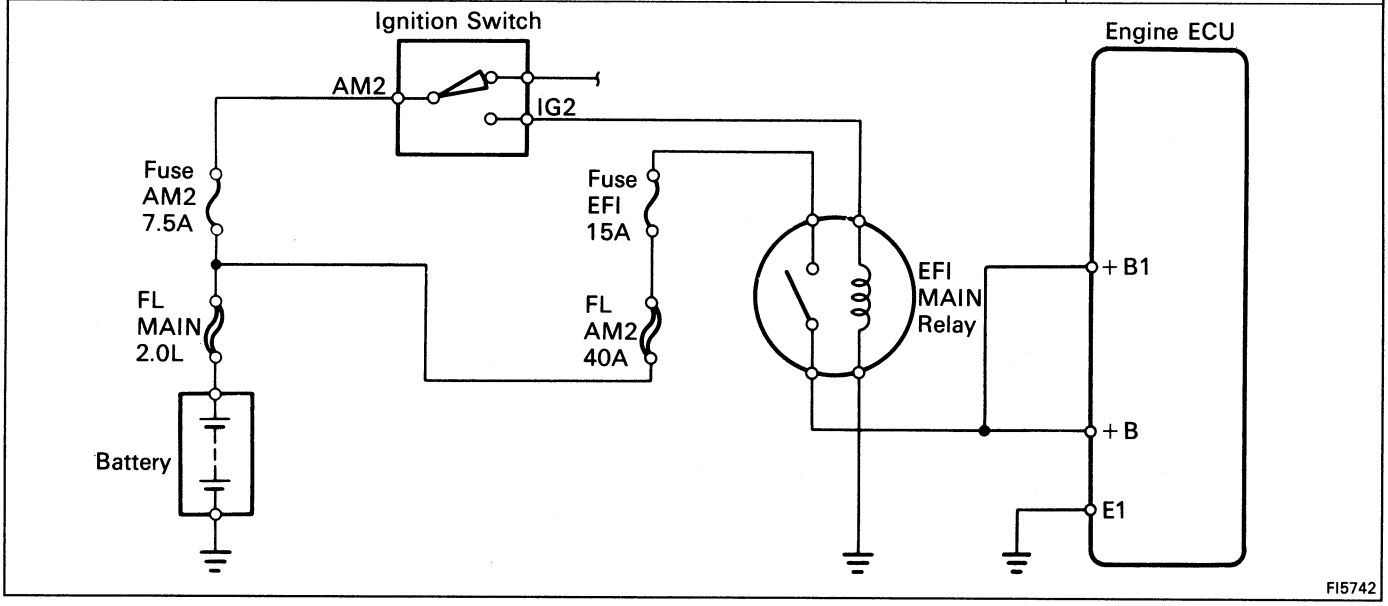

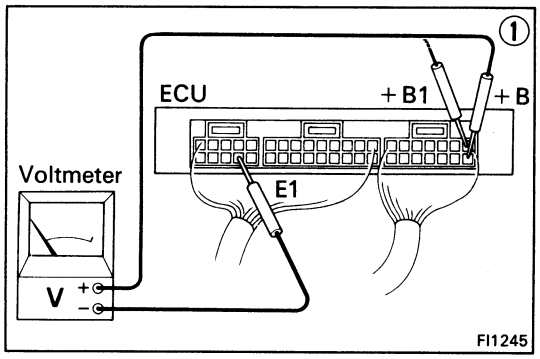

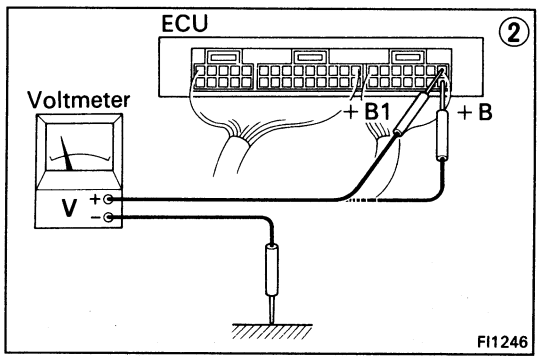

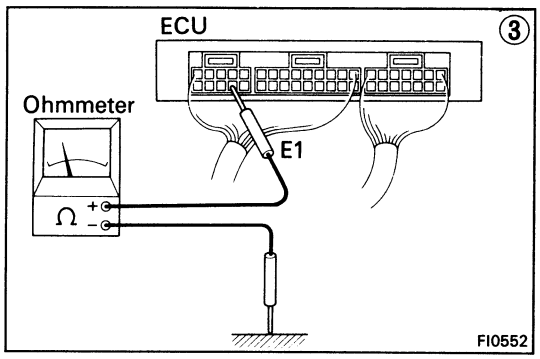

① There is no voltage between ECU terminals +B or +B1 and E1. **(IG SW ON)**

↓

② Check that there is voltage between ECU terminal +B or +B1 and body ground. **(IG SW ON)**

NO → ↓ OK

→ ③ Check wiring between ECU terminal E1 and body ground.

OK → Try another ECU.

BAD → Repair or replace.

↓

Check fuses, fusible links and ignition switch. → BAD → Repair or replace.

↓ OK

Check EFI main relay. (See page FI-156) → BAD → Replace.

↓ OK

Check wiring between EFI main relay and battery. → BAD → Repair or replace.

No.	Terminals	Trouble	Condition	STD voltage
2	BATT – E1	No voltage	IG SW ON	10 – 14 V

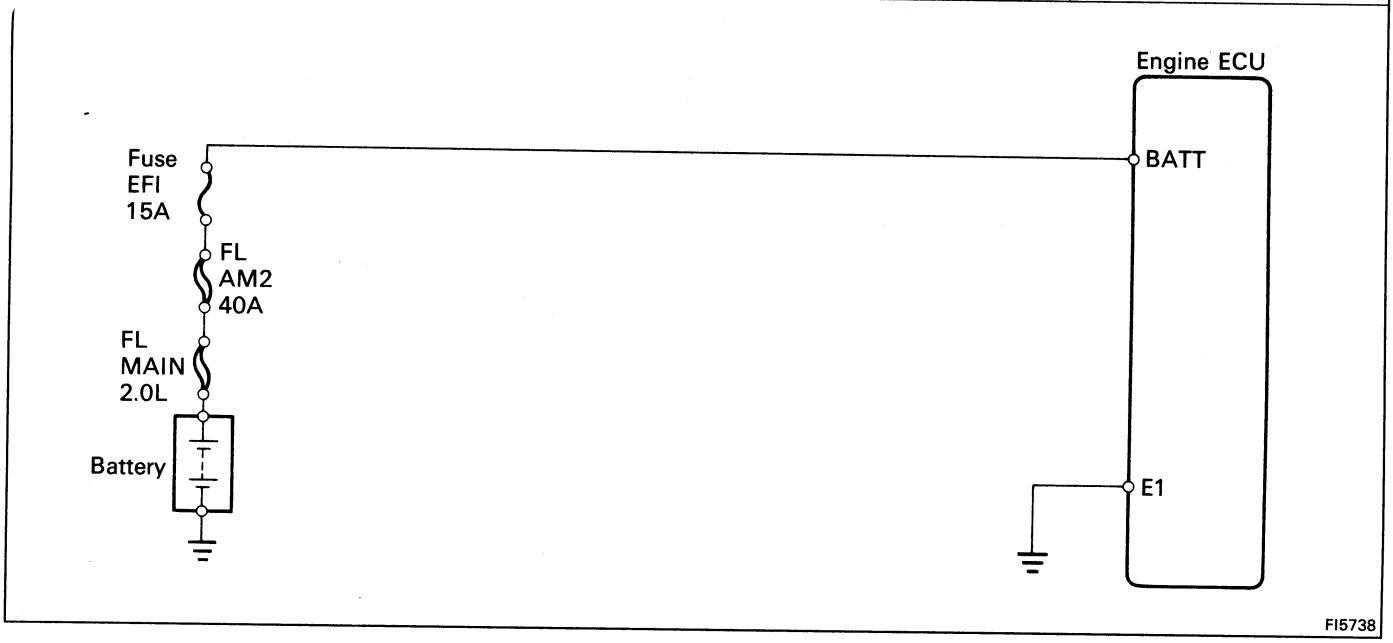

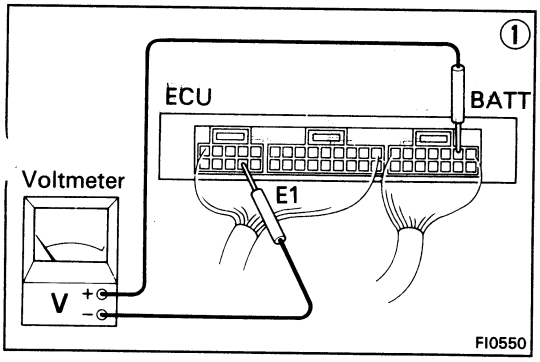

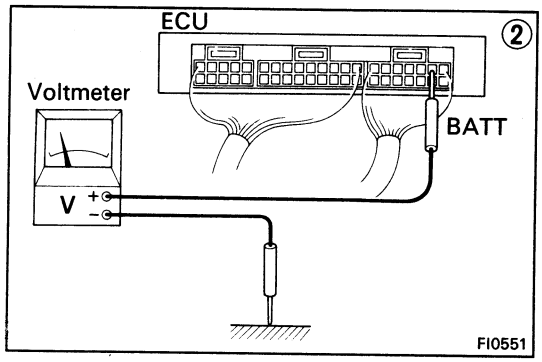

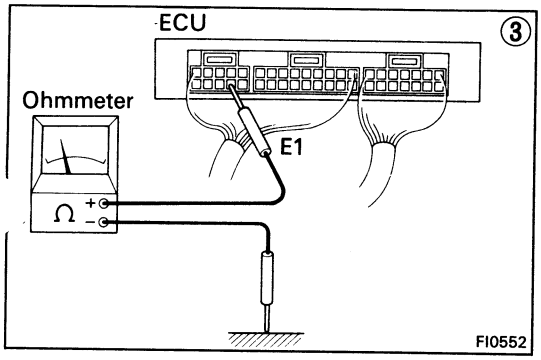

① There is no voltage between ECU terminals BATT and E1.

↓

② Check that there is voltage between ECU terminal BATT and body ground.

NO → ↓ OK

③ Check wiring between ECU terminal E1 and body ground.

OK → Try another ECU.

BAD → Repair or replace.

↓

Check fuse and fusible links.

BAD → Replace.

↓ OK

Check wiring between ECU terminal and battery.

BAD → Repair or replace.

No.	Terminals	Trouble	Condition		STD Voltage
3	IDL – E1	No voltage	IG SW ON	Throttle valve open	8 – 14 V
	PSW – E1			Throttle valve fully closed (Throttle opener must be cancelled first)	4 – 6 V

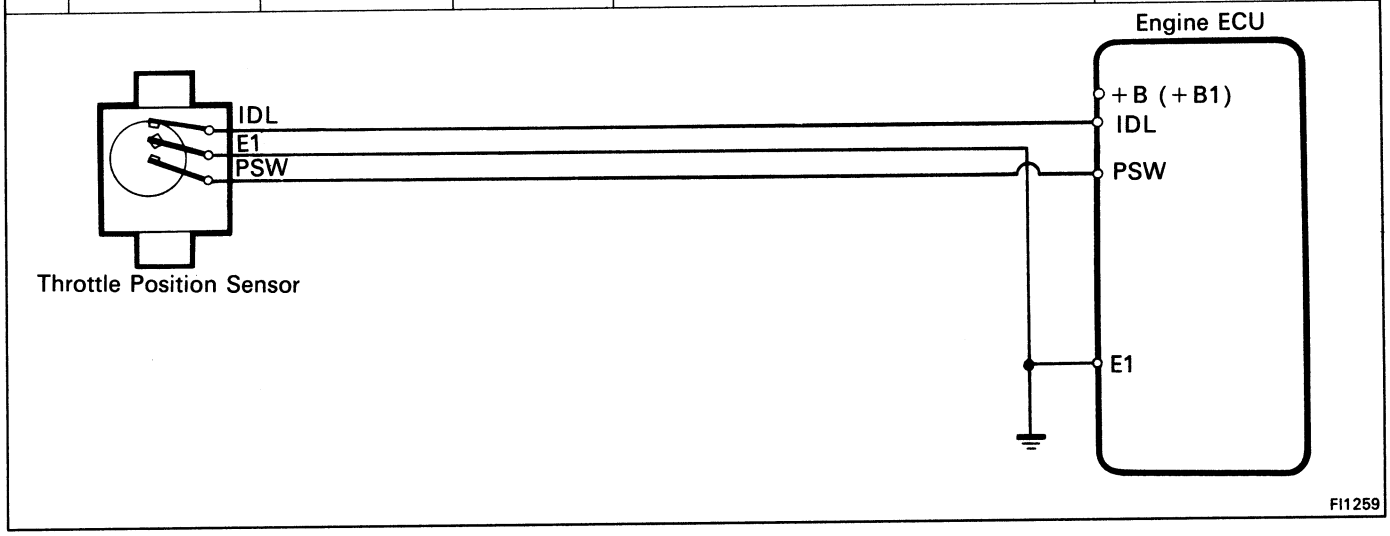

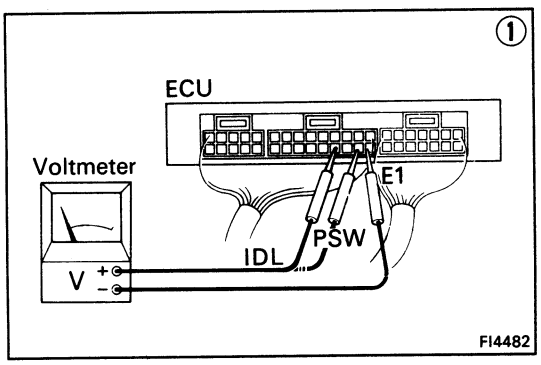

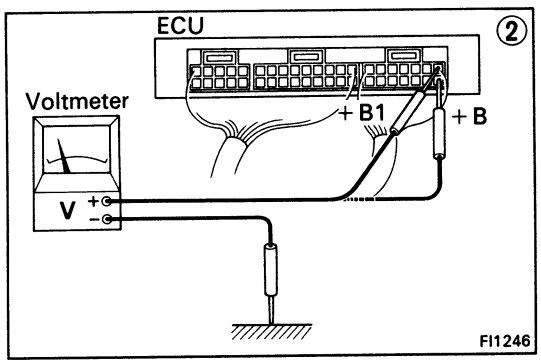

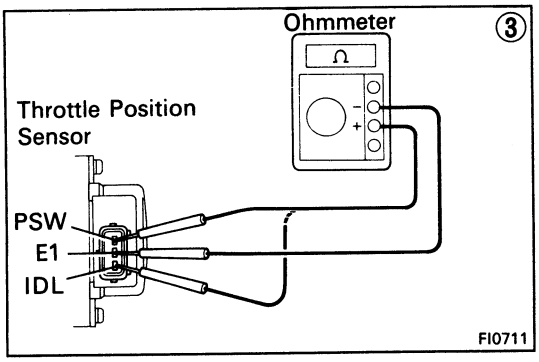

● **IDL – E1, PSW – E1**

① There is no voltage between ECU terminals IDL or PSW and E1. **(IG SW ON)**

② Check that there is voltage between ECU terminal +B or +B1 and body ground. **(IG SW ON)**

NO

OK

Check wiring between ECU terminal E1 and body ground.

OK

Try another ECU.

BAD

Repair or replace.

Refer to No.1. (See page FI-54)

BAD

Repair or replace.

OK

③ Check throttle position sensor. (See page FI-141)

BAD

Replace or repair throttle position sensor.

OK

Check wiring between ECU and throttle position sensor.

BAD

OK

Try another ECU.

No.	Terminals	Trouble	Condition	STD Voltage
4	PIM – E2	No voltage	IG SW ON	3.3 – 3.9 V
	VC – E2			4.5 – 5.5 V

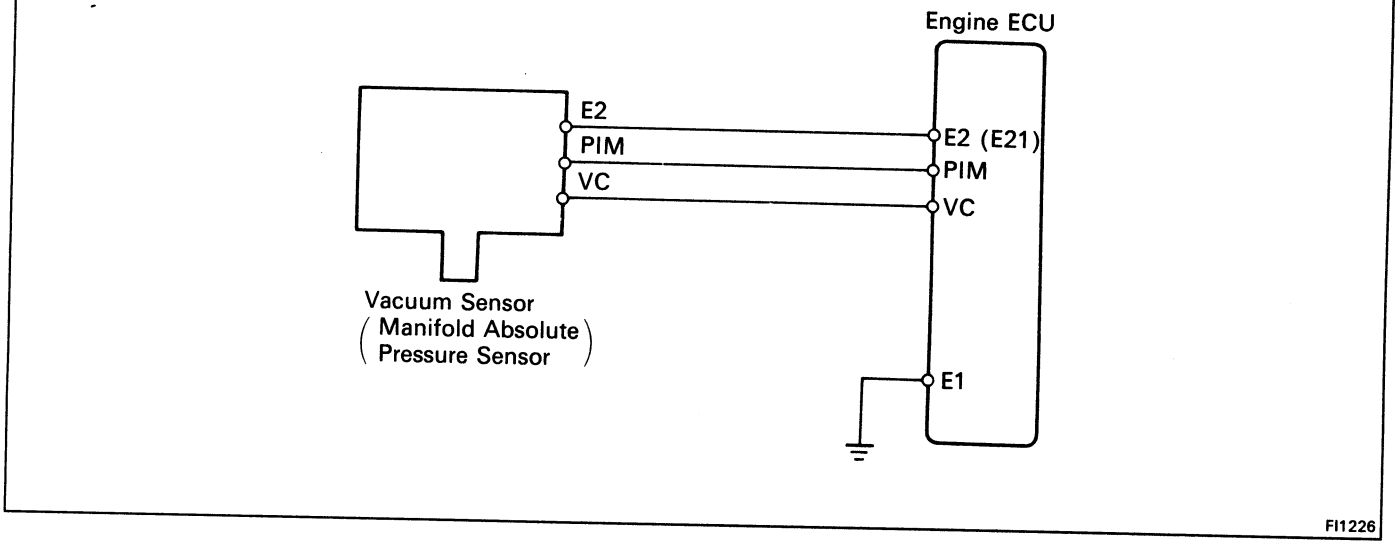

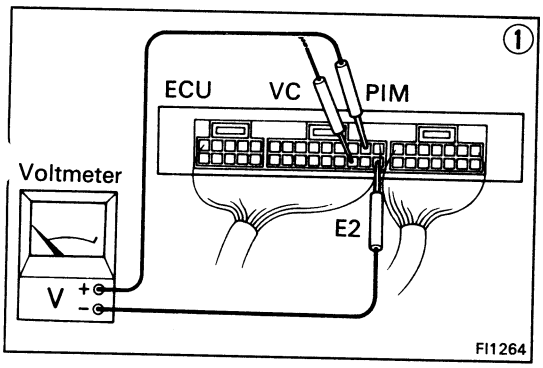

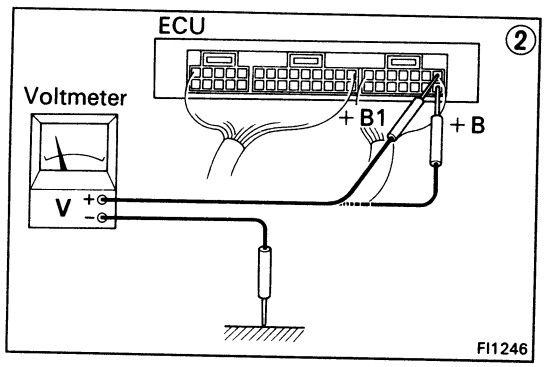

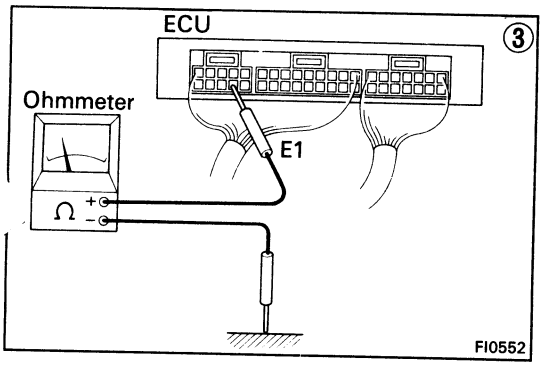

● **PIM – E2, VC – E2**

① There is no voltage between ECU terminal PIM or VC and E2. **(IG SW ON)**

↓

② Check that there is voltage between ECU terminal +B (+B1) and body ground. **(IG SW ON)**

OK ↓

NO → Refer to No.1. (See page FI-54)

↓

③ Check wiring between ECU terminal E1 and body ground.

OK ↓

BAD → Repair or replace.

Check vacuum sensor. (See page FI-136)

BAD → Replace vacuum sensor.

OK → Check wiring between ECU and vacuum sensor.

OK → Try another ECU.

BAD → Repair or replace.

No.	Terminals	Trouble	Condition	STD voltage
5	No.10 – E01 No.20 – E02	No voltage	IG SW ON	10 – 14 V

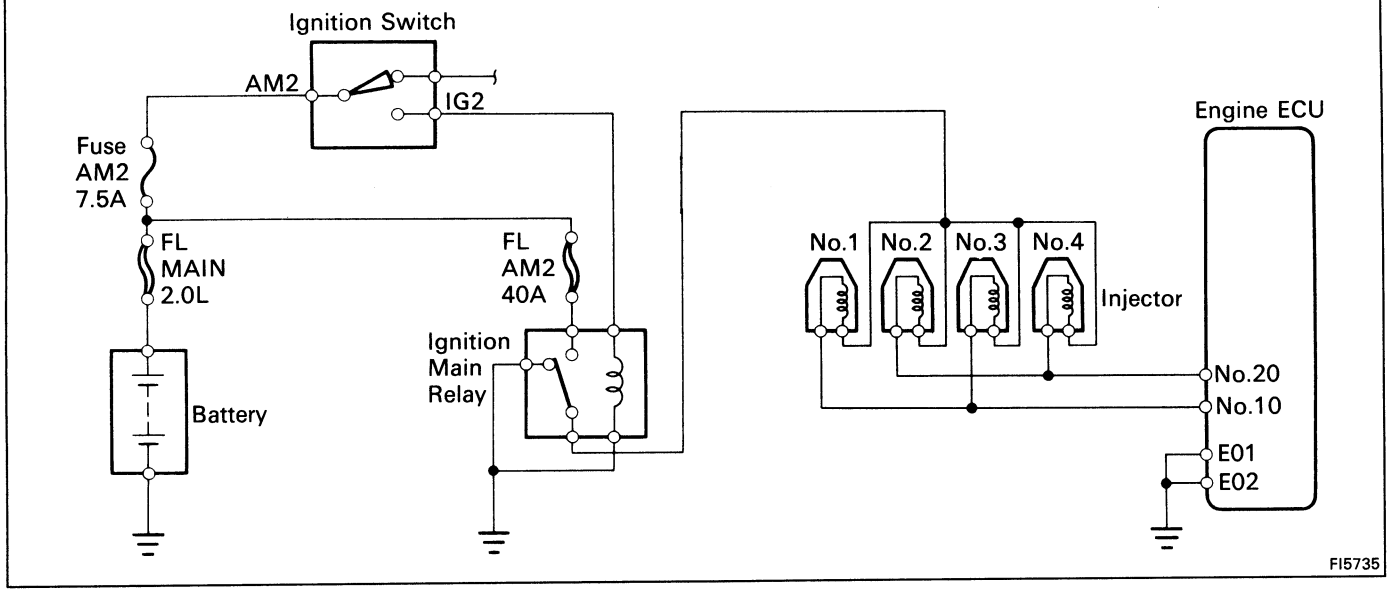

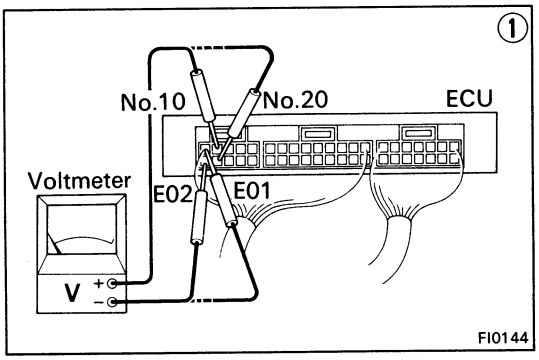

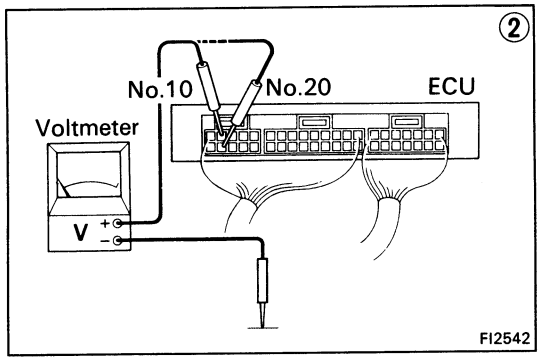

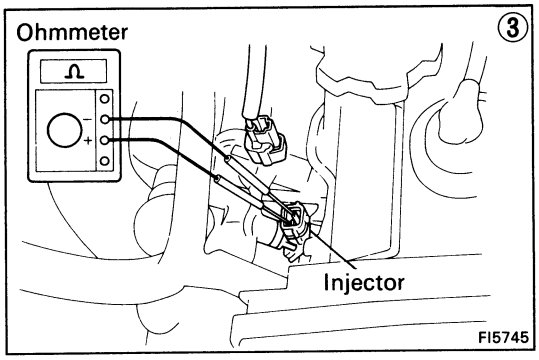

① There is no voltage between ECU terminals No.10 and/or No.20 and E01 and/or E02. **(IG SW ON)**

↓

② Check that there is voltage between ECU terminal No.10 and/or No.20 and body ground.

NO → OK

OK → Check wiring between ECU terminal E01 and/or E02 and body ground.

OK → Try another ECU.

BAD → Repair or replace.

Check fuse, fusible links, ignition switch and ignition main relay. → BAD → Repair or Replace.

OK

③ Check resistance of each injector.
STD resistance: Approx. 13.8 Ω

OK

BAD → Replace injector.

Check wiring between ECU terminal No.10 and/or No.20 and battery. → BAD → Repair or replace.

No.	Terminals	Trouble	Condition		STD voltage
6	THA – E2	No voltage	IG SW ON	Intake air temperature 20°C (68°F)	1.7 – 3.1 V

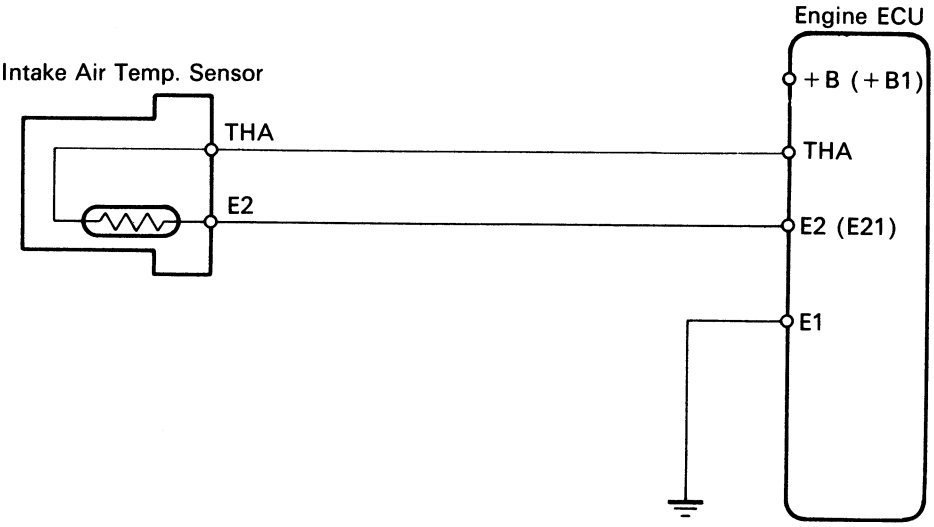

FI3572

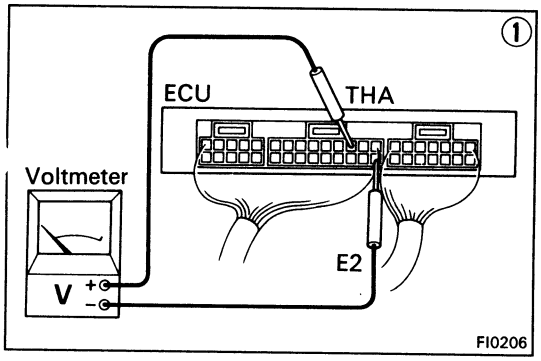

FI0206

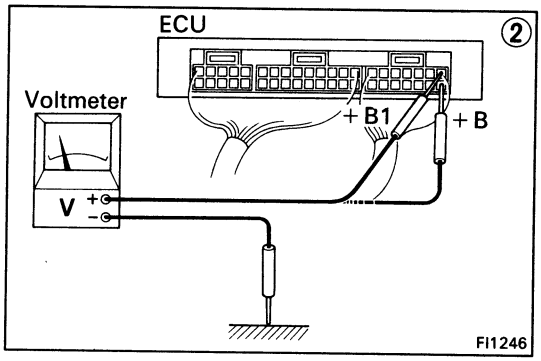

FI1246

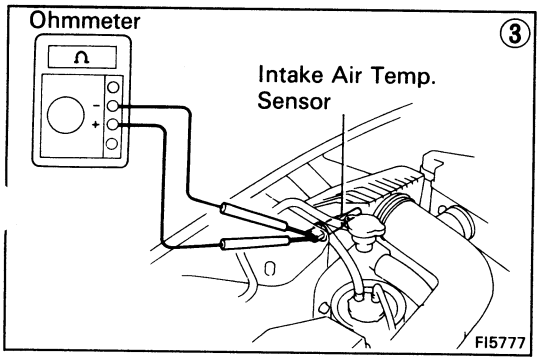

FI5777

① There is no voltage between ECU terminals THA and E2. **(IG SW ON)**

↓

② Check that there is voltage between ECU terminal +B or +B1 and body ground. **(IG SW ON)**

OK ↓

NO → Refer to No.1. (See page FI-54)

↓

Check wiring between ECU terminal E1 and body ground.

OK ↓

BAD → Repair or replace.

↓

③ Check intake air temp. sensor. (See page FI-169)

BAD → Replace intake air temp. sensor.

OK → Check wiring between ECU and intake air temp. sensor.

OK → Try another ECU.

BAD → Repair or replace.

No.	Terminals	Trouble	Condition		STD voltage
7	THW – E2	No voltage	IG SW ON	Coolant temperature 80°C (176°F)	0.3 – 0.8 V

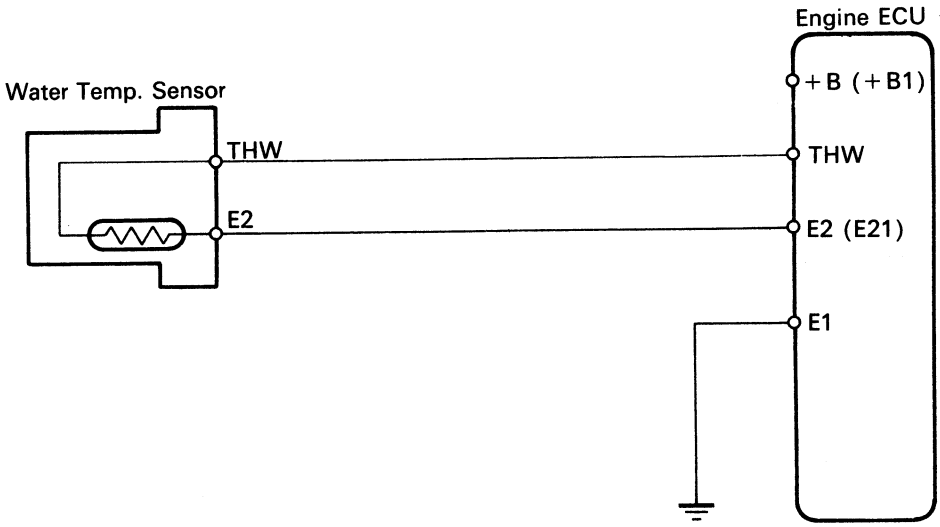

FI3572

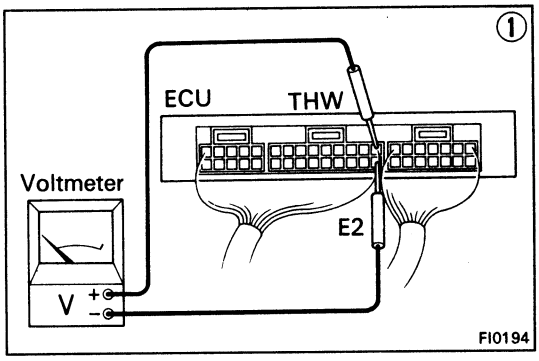

FI0194

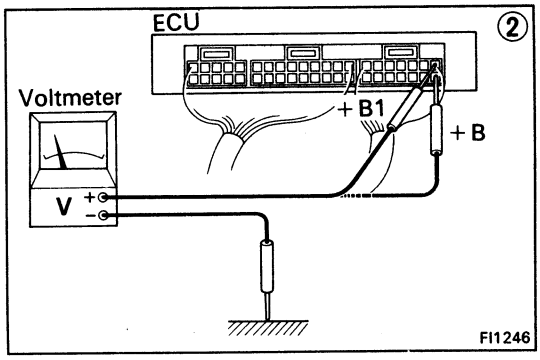

FI1246

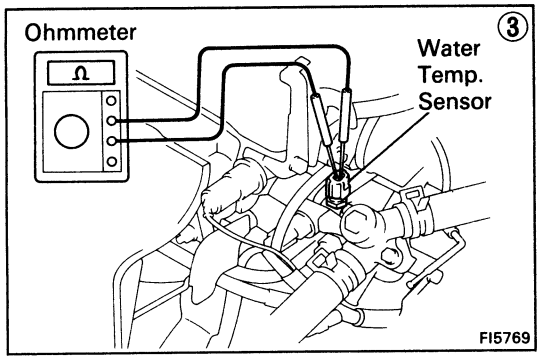

FI5769

① There is no voltage between ECU terminals THW and E2. **(IG SW ON)**

② Check that there is voltage between ECU terminal +B or +B1 and body ground. **(IG SW ON)**

OK → Check wiring between ECU terminal E1 and body ground.

NO → Refer to No.1. (See page FI-54)

OK → ③ Check water temp. sensor. (See page FI-168)

BAD → Replace water temp. sensor.

OK → Check wiring between ECU and water temp. sensor.

OK → Try another ECU.

BAD → Repair or replace.

BAD → Repair or replace.

No.	Terminals	Trouble	Condition	STD voltage
8	STA – E1	No voltage	Cranking	6 – 14 V

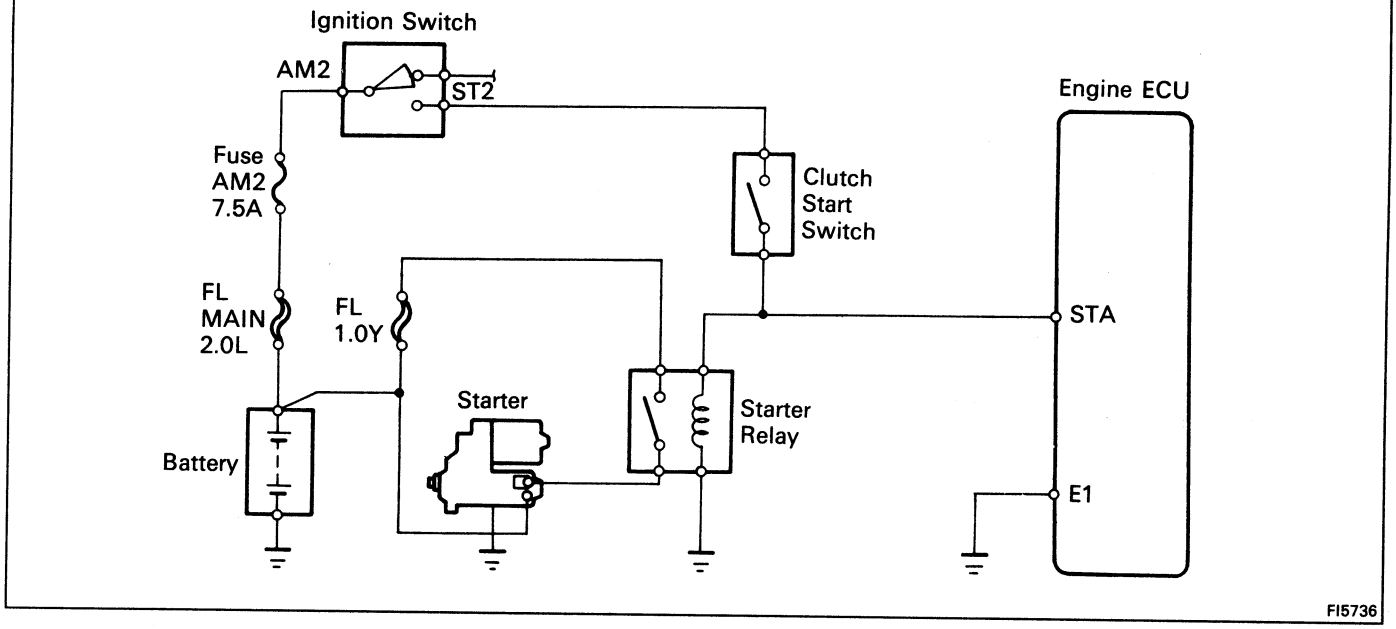

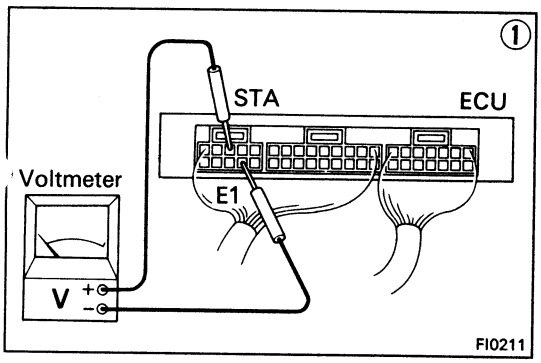

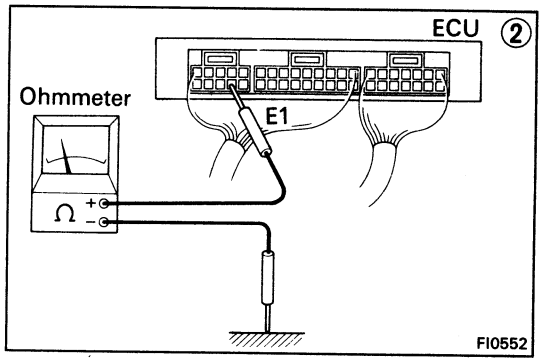

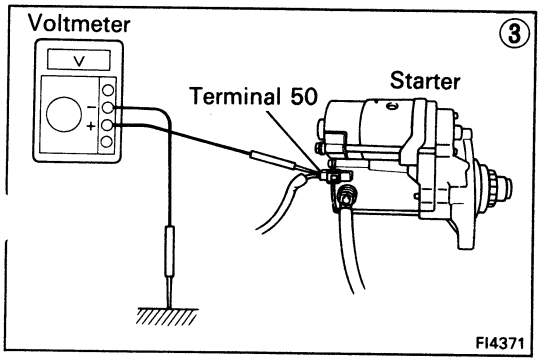

① There is no voltage between ECU terminals STA and E1. **(IG SW START)**

Check starter operation. — OK → Check wiring between ECU terminal STA and ignition switch terminal ST2. — OK → ② Check wiring between ECU terminal E1 and body ground. — OK → Try another ECU. / BAD → Repair or replace.

ST2 — BAD → Repair or replace.

BAD → Check fuse, fusible links, battery, wiring, ignition switch, clutch start switch and starter relay. — BAD → Repair or replace.

OK → ③ Check that there is voltage at terminal 50 of starter. **(IG SW START)** **STD voltage: 6 – 14 V**

OK → Check starter.

NO → Check wiring between ignition switch terminal ST2 and starter terminal 50.

No.	Terminals	Trouble	Condition	STD voltage
9	IGT – E1	No voltage	Idling	0.8 – 1.2 V

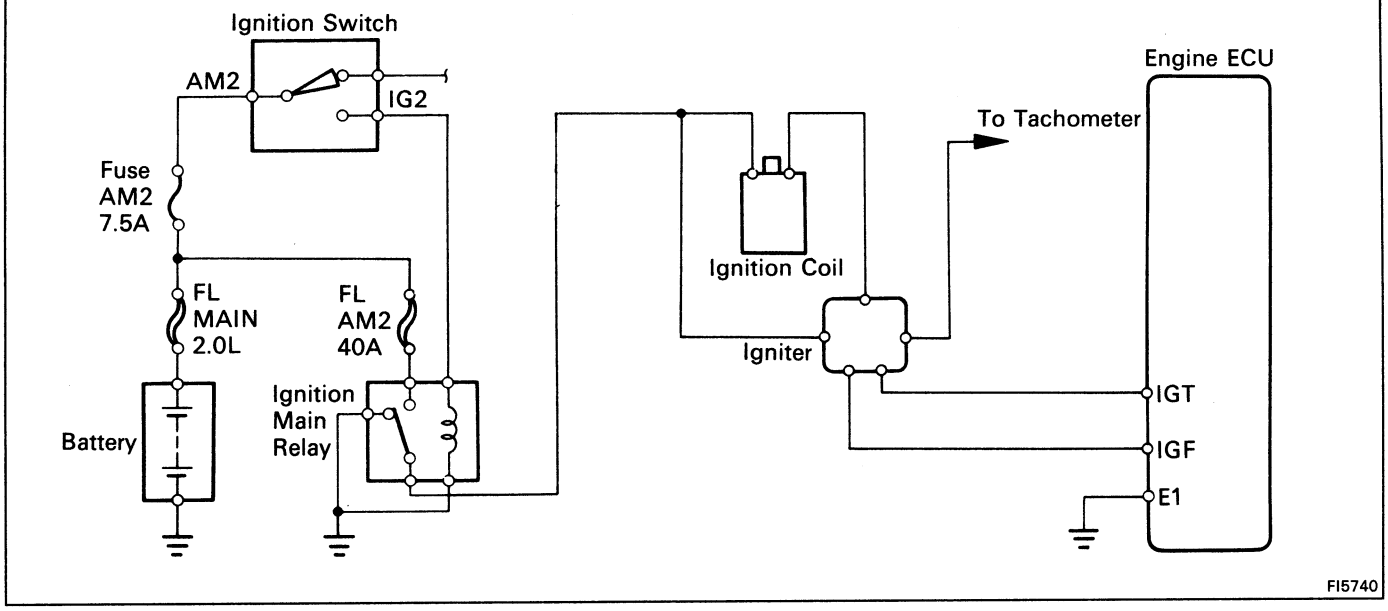

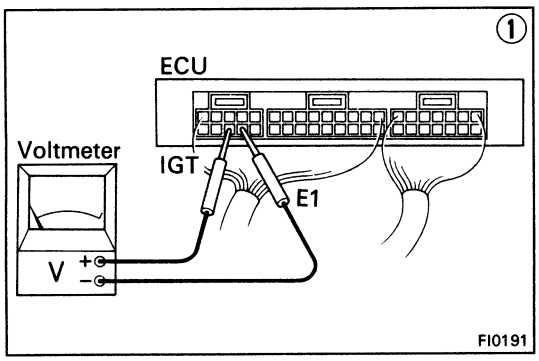

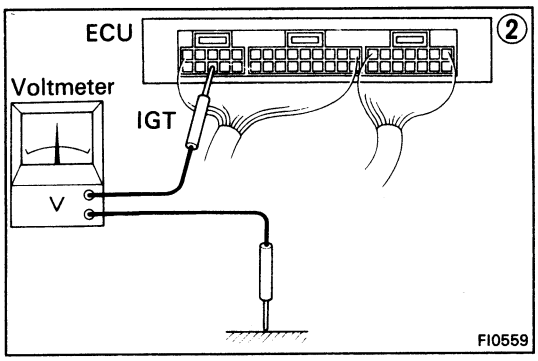

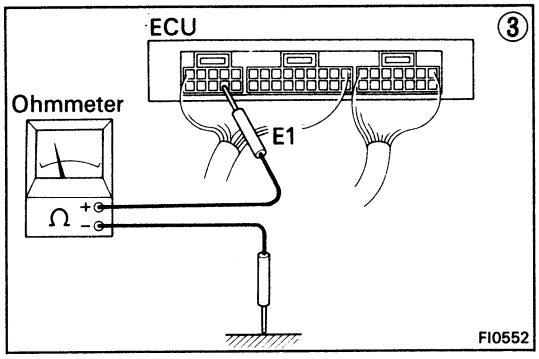

① There is no voltage between ECU terminals IGT and E1. **(Idling)**

↓

② Check that there is voltage between ECU terminal IGT and body ground. **(Idling)**

NO → OK

OK → ③ Check wiring between ECU terminal E1 and body ground. → BAD → Repair or Replace.

③ OK → Try another ECU.

↓

Check fuse, fusible links, ignition switch and ignition main relay. → BAD → Repair or replace.

OK ↓

Check distributor. (See page IG-13) → BAD → Repair or replace.

OK ↓

Check wiring between ECU and battery. → BAD → Repair or replace.

OK ↓

Check igniter. (See page IG-13) → BAD → Repair or replace.

No.	Terminals	Trouble	Condition	STD voltage
10	ISCC, ISCO – E1	No voltage	IG SW ON	8 – 1.2 V

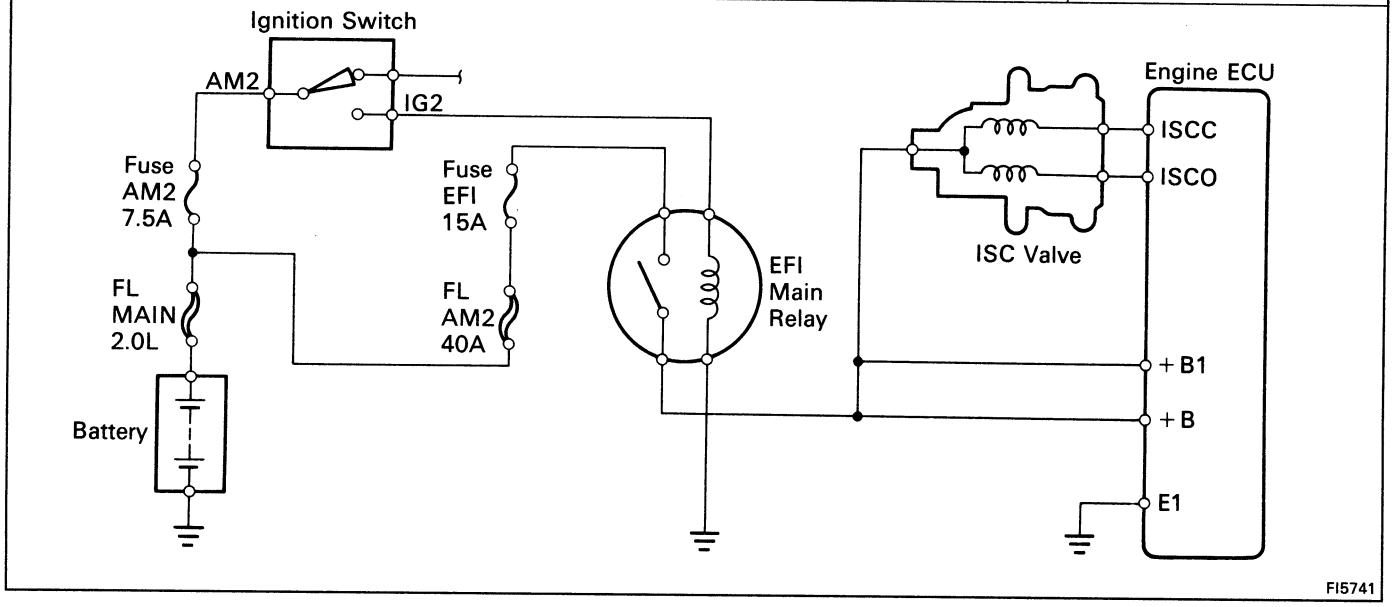

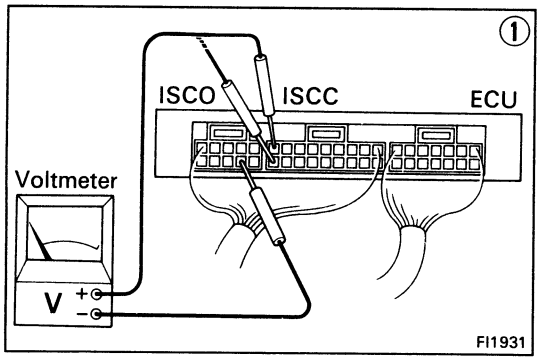

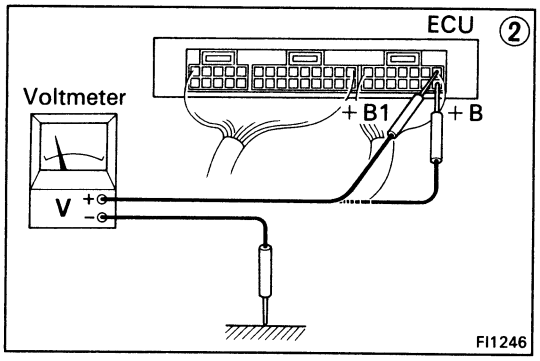

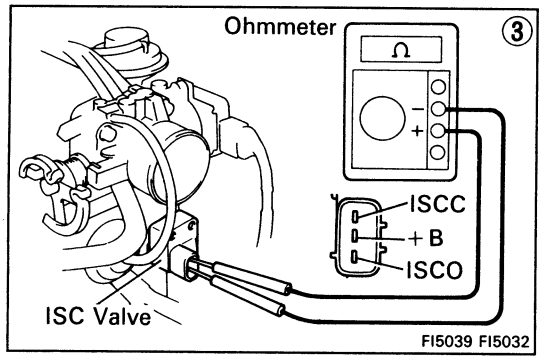

① There is no voltage between ECU terminals ISCC or ISCO and E1. **(IG SW ON)**

↓

② Check that there is voltage between ECU terminal +B or +B1 and body ground. **(IG SW ON)**

OK ↓

NO → Refer to No.1. (See page FI-54)

↓

③ Check resistance between ISC valve terminals +B and ISCC or ISCO
STD resistance:
Approx. 19.3 – 22.3 Ω

BAD → Replace ISC valve.

OK ↓

Check wiring between ECU and ISC valve.

BAD → Repair or replace wiring.

OK ↓

Try another ECU.

No.	Terminals	Trouble	Condition	STD voltage
11	W – E1	No voltage	No troable ("CHECK warning light off) and engine running	10 – 14 V

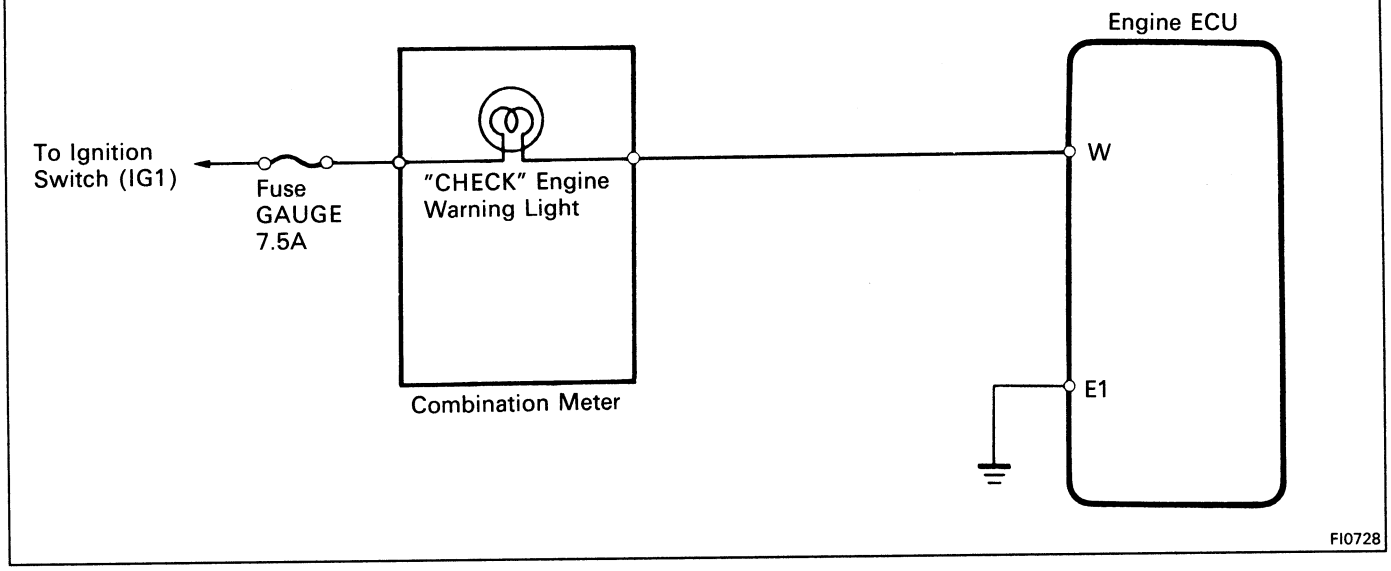

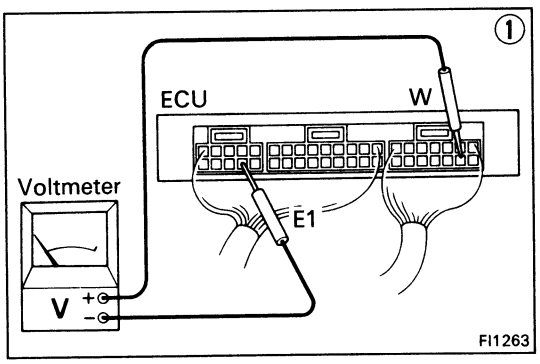

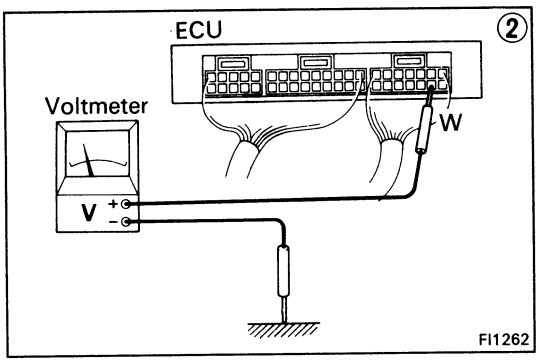

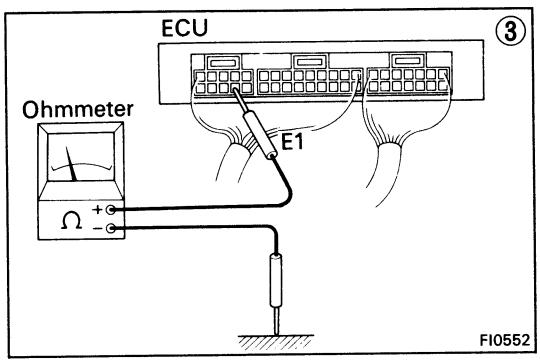

① There is no voltage between ECU terminals W and E1. **(Idling)**

↓

② Check that there is voltage between ECU terminal W and body ground.

NO ↓ OK

③ Check wiring between ECU terminal E1 and body ground.

OK ↓ Try another ECU.

BAD → Repair or replace.

Check fuse GAUGE (7.5A) and "CHECK" engine warning light.

OK ↓ BAD → Repair or replace.

Fuse blows again ↓

Check wiring between ECU terminal W and fuse. → BAD → Repair or replace.

No.	Terminals	Trouble	Condition	STD voltage
12	A/C – E1	No voltage	Air conditioning ON	8 – 14 V

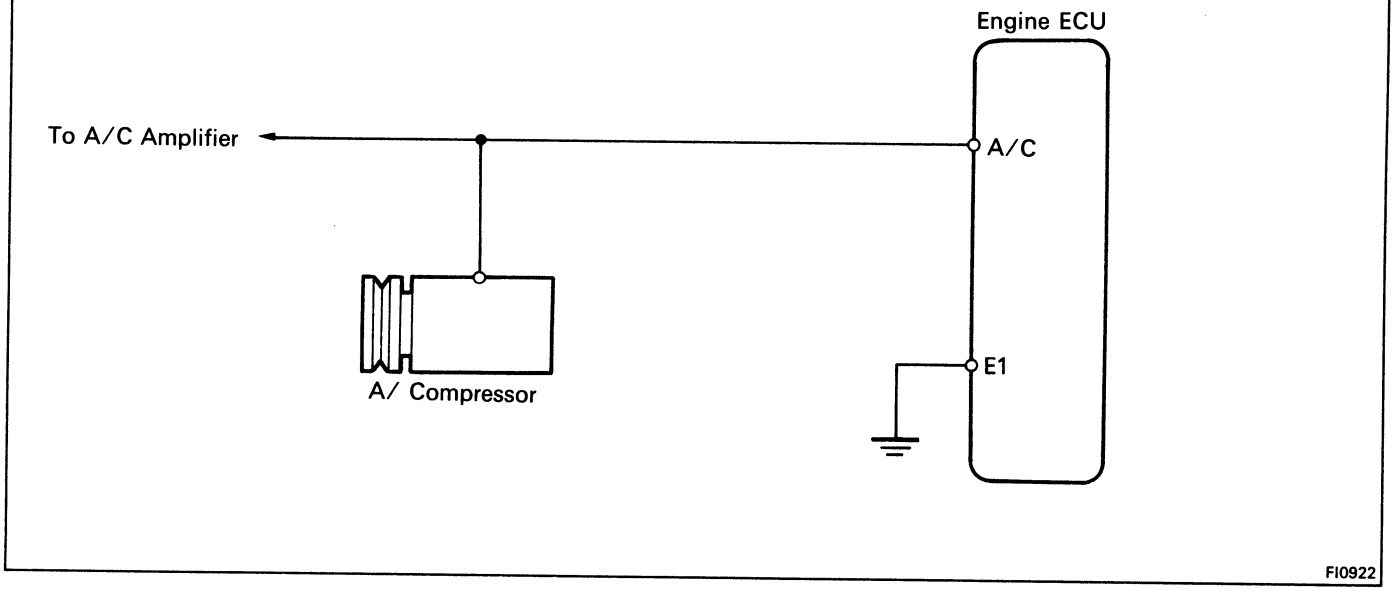

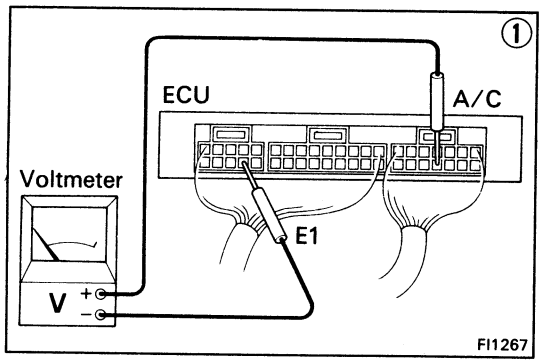

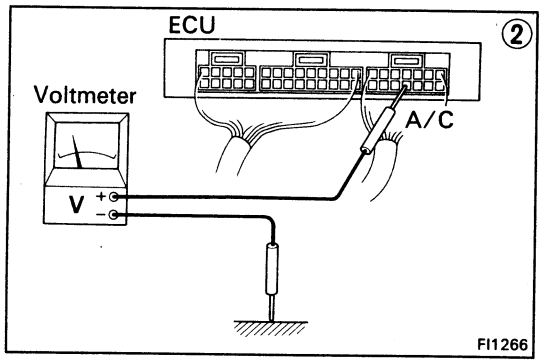

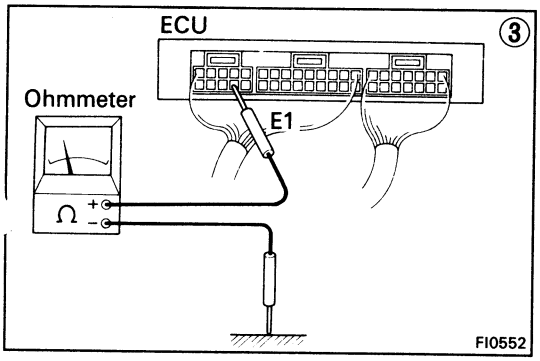

① There is no voltage between ECU terminals A/C and E1. **(Air conditioning ON)**

② Check that there is voltage between ECU terminal A/C and body ground.

NO → ③ Check wiring between ECU terminal E1 and body ground.
- OK → Try another ECU.
- BAD → Repair or replace.

OK → Check compressor running.
- OK → Check wiring between ECU terminal A/C and amplifier.
  - BAD → Repair or replace.
- BAD → Check that there is voltage between amplifier terminal and body ground.
  - BAD → Repair or replace.
  - OK → Check wiring between amplifier and ECU or compressor.
    - BAD → Repair or replace.

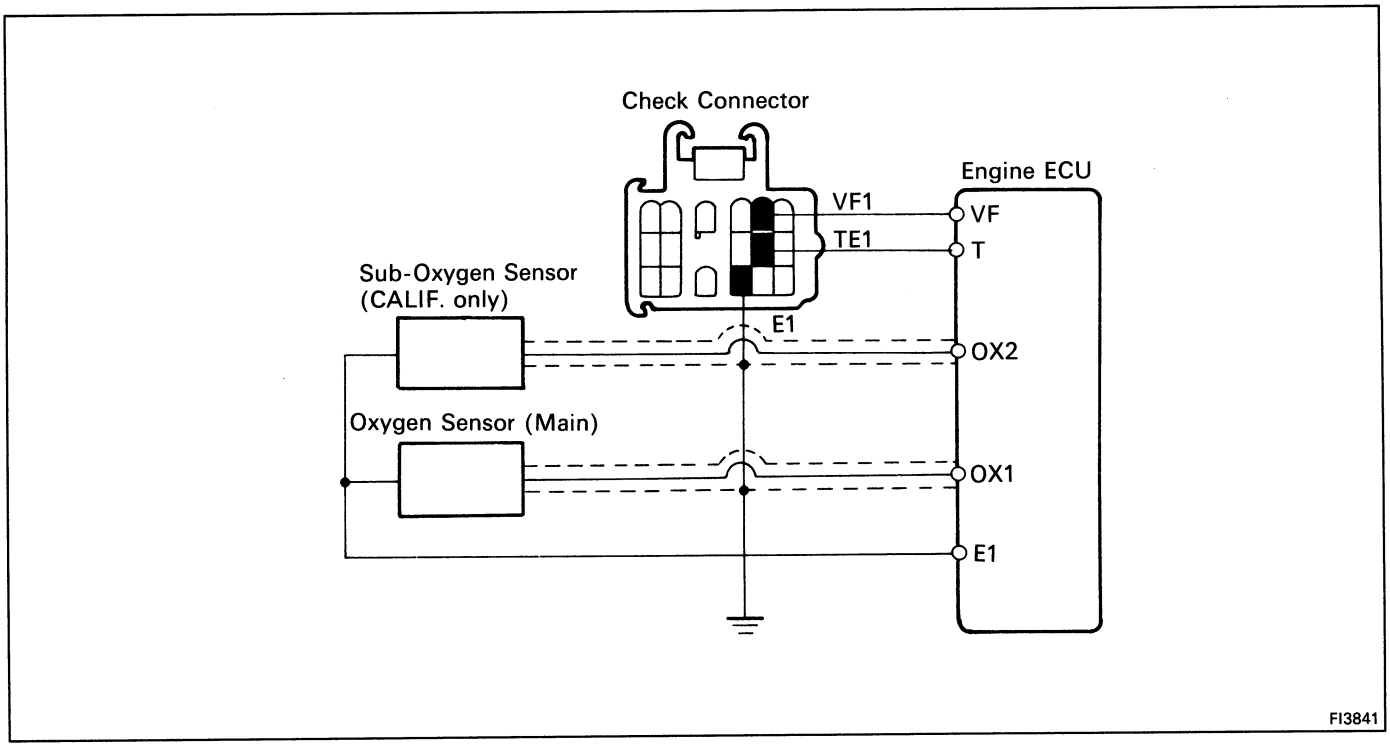

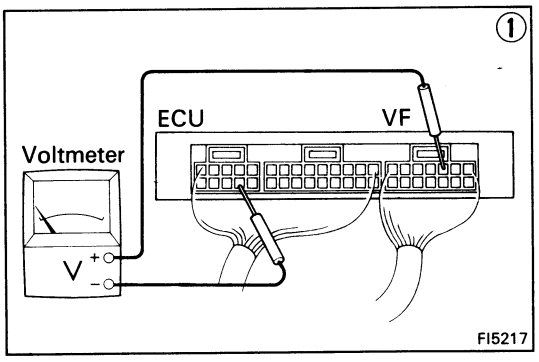

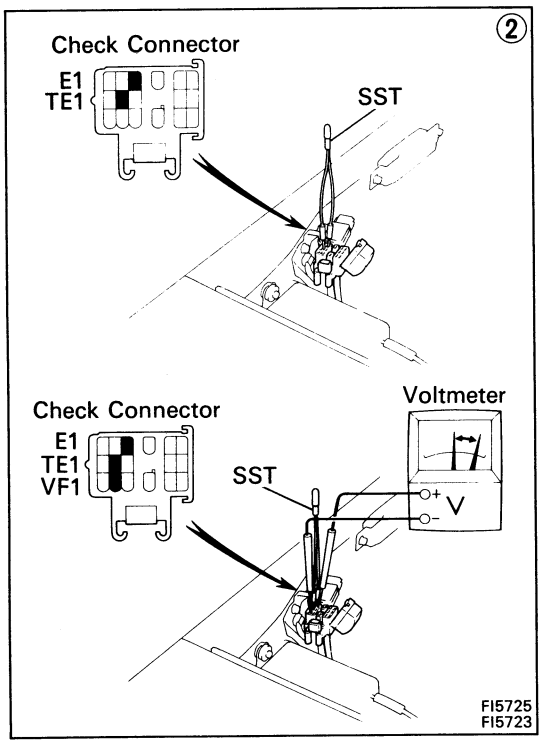

① There is no voltage between ECU terminals VF and E1

Check that there is voltage between ECU terminal VF and body ground.

No → OK: Check wiring between ECU terminal E1 and body ground.
- OK → Try another ECU. BAD → Repair or replace.
- BAD → Repair or replace.

Is air leaking into air induction system? BAD → Repair or replace.

OK

Check spark plugs. (See page IG-11) BAD → Repair or replace

OK

Check distributor and Ignition system. (See page IG-4) BAD → Repair or replace.

OK

Check fuel pressure. (See page FI-87) BAD → Repair or replace.

OK

Check injectors. (See page FI-120) BAD → Repair or replace.

OK

* Check cold start injector. (See page FI-102) BAD → Repair or replace.

OK

Check vacuum sensor. (See page FI-170) BAD → Repair or replace.

OK

② Check operation of oxygen sensors(s). (See page FI-173 and 175) OK → System normal

BAD

Check wiring between oxygen senor(s) and ECU. BAD → Repair wiring.

OK

Replace oxygen sensor(s).

* Rich malfunction only

CALIF. only

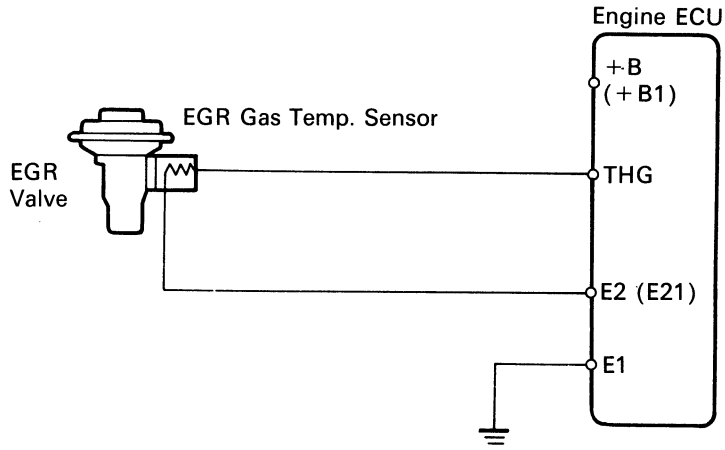

FI2680

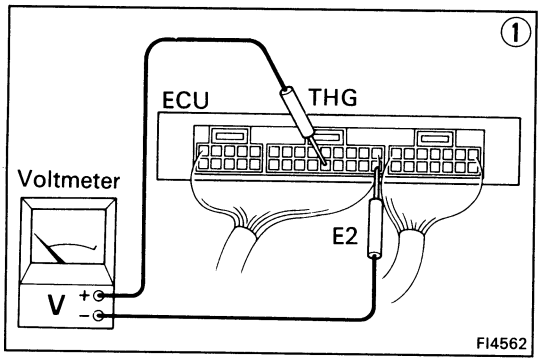

FI4562

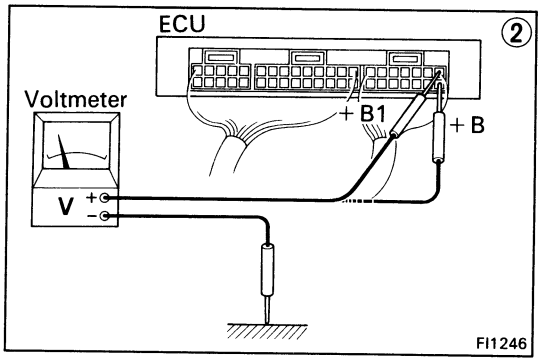

FI1246

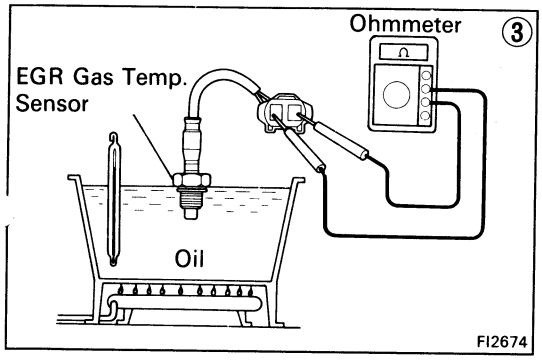

FI2674

① There is no voltage between ECU terminals THG and E2. **(IG SW ON)**

↓

② Check that there is voltage between ECU terminal +B or +B1 and body ground. **(IG SW ON)**

OK → ↓

NO → Refer to No.1. (See page FI-54)

↓

Check wiring between ECU terminal E1 and body ground.

OK → ↓

BAD → Repair or replace.

↓

Check EGR system. (See page EC-24)

BAD → Repair or replace.

OK → ↓

③ Check EGR gas temp. sensor. (See page FI-172)

BAD → Replace EGR gas temp. sensor.

OK → Check wiring between ECU and EGR gas temp. sensor.

OK → Try another ECU.

BAD → Repair or replace.

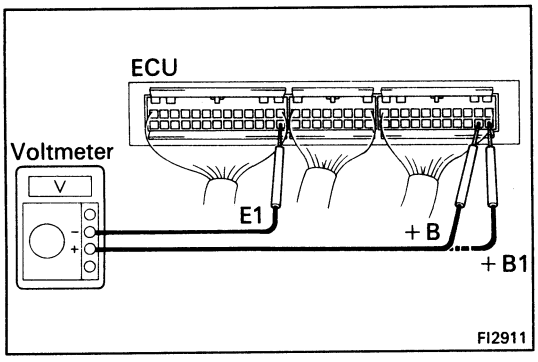

EFI SYSTEM CHECK PROCEDURE (5S-FE A/T)

HINT:

- Perform all voltage measurements with the connectors disconnected.
- Verify that the battery voltage is 11 V or more when the ignition switch is in "ON" position.

Using a voltmeter with high impedance (10 kΩ/V minimum), measure the voltage at each terminal of the wiring connectors.

Terminals of ECU

Symbol	Terminal	Symbol	Terminal	Symbol	Terminal
E01	POWER GROUND		–	A/C	A/C COMPRESSOR
E02	POWER GROUND	G1	DISTRIBUTOR	ACT	A/C AMPLIFIER
No.10	INJECTOR	NE	DISTRIBUTOR	SPD	SPEED SENSOR (for Meter)
	–	E1	ENGINE GROUND	OD1	CC ECU
No.20	INJECTOR	VF	CHECK CONNECTOR	PS	POWER STEERING ECU
	–	G⊖	DISTRIBUTOR		–
ISCO	ISC VALVE	DC	CHECK CONNECTOR	OD2	OD MAIN SWITCH
EGR	EGR VALVE	T	CHECK CONNECTOR		–
ISCC	ISC VALVE	OX1	OXYGEN SENSOR (MAIN)	PSCT	POWER STEERING ECU
	–	* OX2	SUB-OXYGEN SENSOR		–
FPU	FUEL PRESSURE VSV		–		–
	–		–		–
STJ	COLD START INJECTOR	THW	WATER TEMP. SENSOR	B/K	STOP LIGHT SWITCH
IGT	IGNITER	IDL	THROTTLE POSITION SENSOR		–
S1	ECT SOLENOID	THA	INTAKE AIR TEMP. SENSOR		–
L	NEUTRAL START SWITCH	VTA	THROTTLE POSITION SENSOR	FC	CIRCUIT OPENING RELAY
S2	ECT SOLENOID	PIM	VACUUM SENSOR	ELS	HEADLIGHT SWITCH DEFOGGER SWITCH
2	NEUTRAL START SWITCH	* THG	EGR GAS TEMP. SENSOR	+B1	EFI MAIN RELAY
SL	ECT SOLENOID	VC	VACUUM SENSOR	BATT	BATTERY
SP2	SPEED SENSOR (for ECT)	E2	SENSOR GROUND	+B	EFI MAIN RELAY
IGF	IGNITER	STA	STARTER SWITCH		
E21	SENSOR GROUND	NSW	NEUTRAL START SWITCH		

* CALIF. only

Engine & ECT ECU Terminals

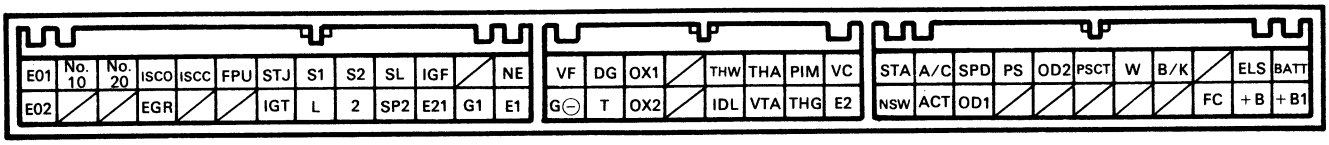

FI2796

Voltage at ECU Wiring Connectors

No.	Terminals	Condition		STD voltage (V)	See page
1	+ B + B1 – E1	IG SW ON		10 – 14	FI-70
2	BATT – E1	—		10 – 14	FI-71
3	IDL – E2	IG SW ON	Throttle valve open	8 – 14	FI-72
	VC – E2		—	4.5 – 5.5	
	VTA – E2		Throttle valve fully closed (Throttle opener must be cancelled first)	0.8 – 1.2	
			Throttle valve fully open	3.2 – 4.2	
4	PIM – E2	IG SW ON		3.3 – 3.9	FI-74
	VC – E2			4.5 – 5.5	
5	No.10 – E01 No.20 – E02			10 – 14	FI-75
6	THA – E2	IG SW ON	Intake air temp. 20°C (68°F)	1.7 – 3.1	FI-76
7	THW – E2		Coolant temp. 80°C (176°F)	0.3 – 0.8	FI-77
8	STA – E1	Cranking		6 – 14	FI-78
9	IGT – E1	Cranking or idling		0.8 – 1.2	FI-79
10	ISCC ISCO – E1	IG SW ON		8 – 14	FI-80
11	W – E1	No trouble ("CHECK" engine warning light off) and engine running		10 – 14	FI-81
12	A/C – E1	IG SW ON	Air conditioning ON	8 – 14	FI-82

Engine & ECT ECU Terminals

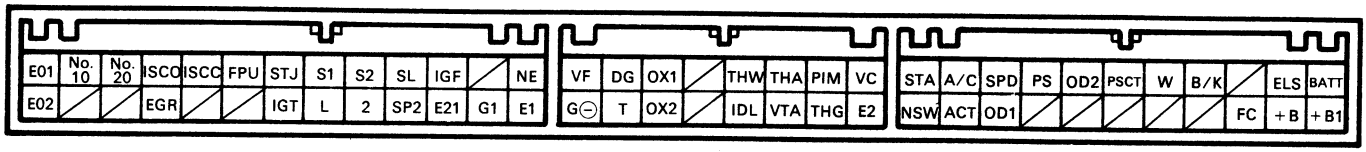

FI2796

No.	Terminals	Trouble	Condition	STD voltage
1	+B +B1 – E1	No voltage	IG SW ON	10 – 14V

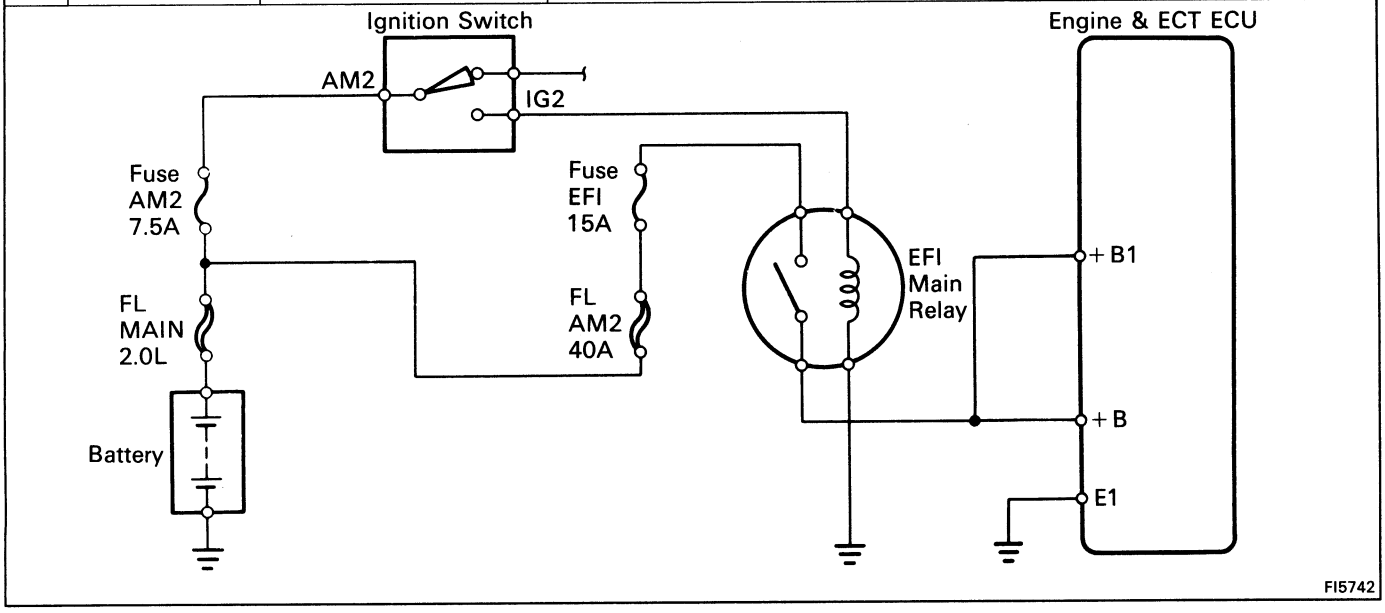

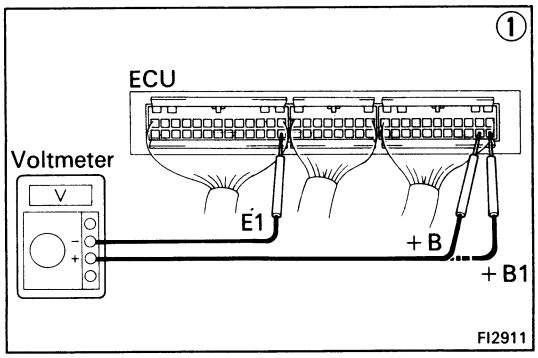

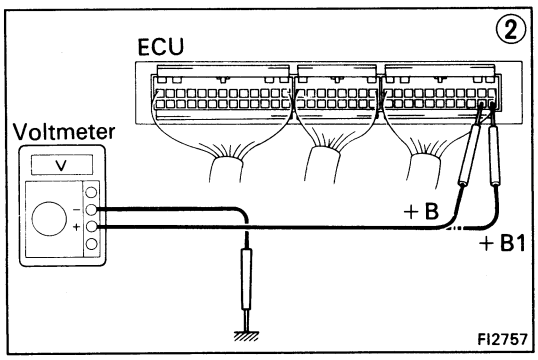

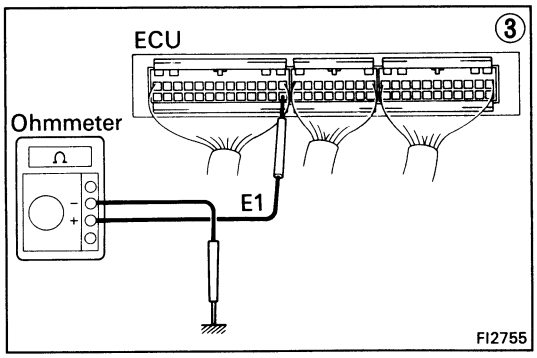

① There is no voltage between ECU terminals +B or +B1 and E1. **(IG SW ON)**

↓

② Check that there is voltage between ECU terminal +B or +B1 and body ground. **(IG SW ON)**

NO → OK

OK → ③ Check wiring between ECU terminal E1 and body ground.

OK → Try another ECU.

BAD → Repair or replace.

NO → Check fuses, fusible links and ignition switch.

BAD → Repair or replace.

OK → Check EFI main relay. (See page FI-156)

BAD → Replace.

OK → Check wiring between EFI main relay and battery.

BAD → Repair or replace.

No.	Terminals	Trouble	Condition	STD voltage
2	BATT – E1	No voltage	–	10 – 14 V

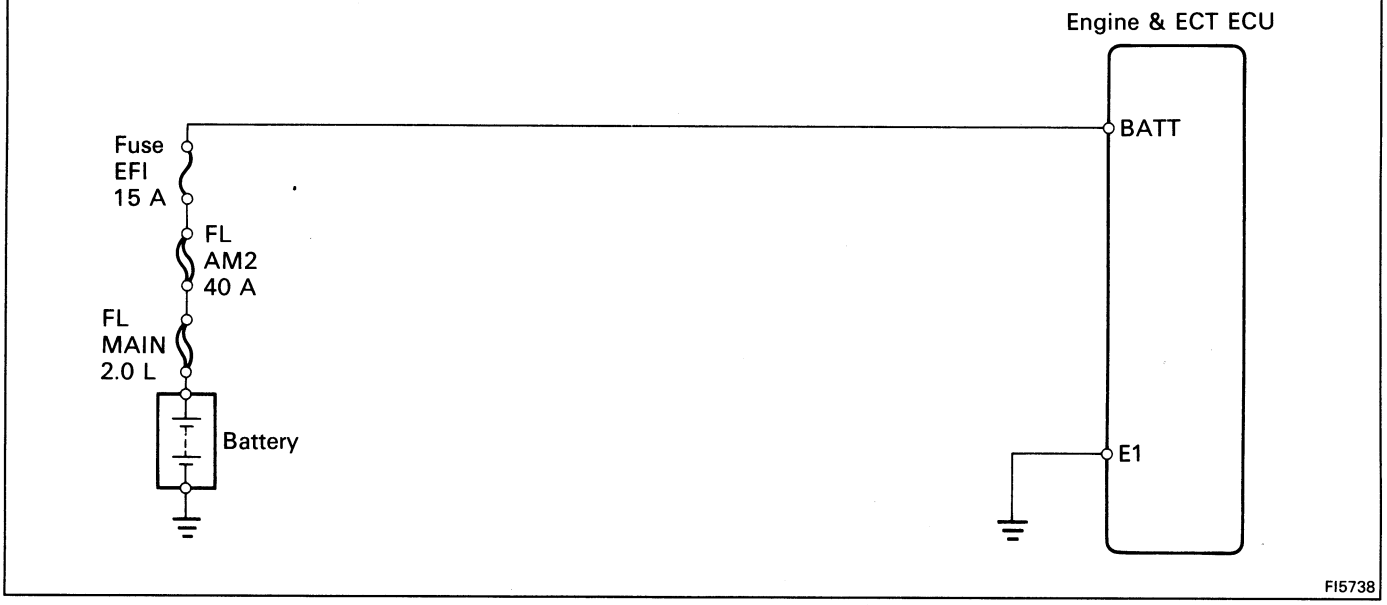

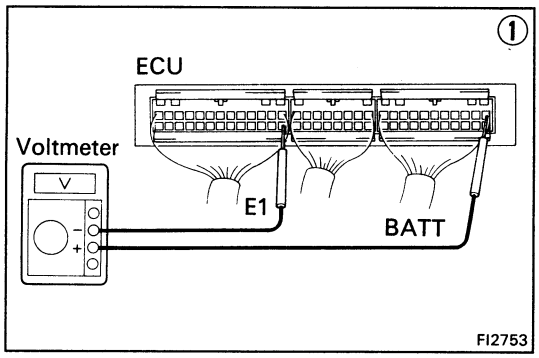

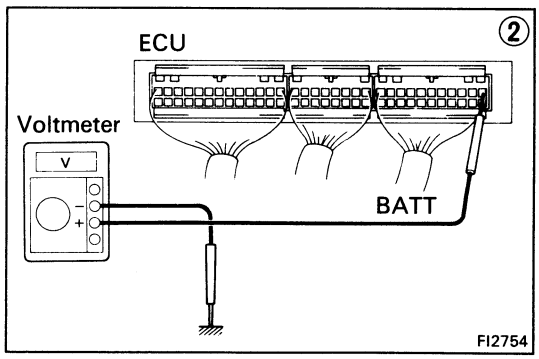

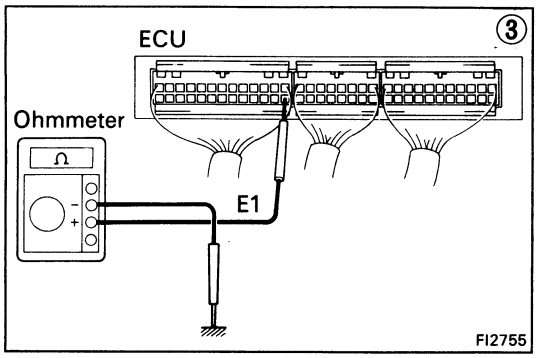

① There is no voltage between ECU terminals BATT and E1.

② Check that there is voltage between ECU terminal BATT and body ground.

NO

OK

③ Check wiring between ECU terminal E1 and body ground.

OK

Try another ECU.

BAD

Repair or replace.

Check fuse and fusible links.

BAD

Replace.

OK

Check wiring between ECU terminal and battery.

BAD

Repair or replace.

No.	Terminals	Trouble		Condition	STD Voltage
3	IDL – E2	No voltage	IG SW ON	Throttle valve open	8 – 14 V
	VC – E2			–	4.5 – 5.5 V
	VTA – E2			Throttle valve fully closed (Throttle opener must be cancelled first)	0.8 – 1.2 V
				Throttle valve fully open	3.2 – 4.2 V

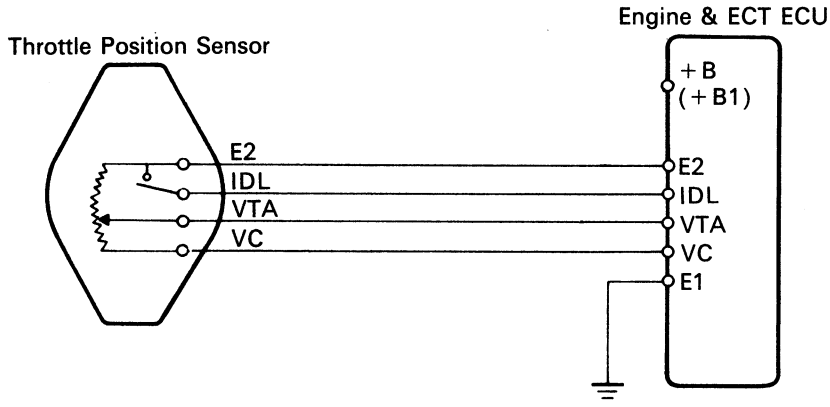

FI1366

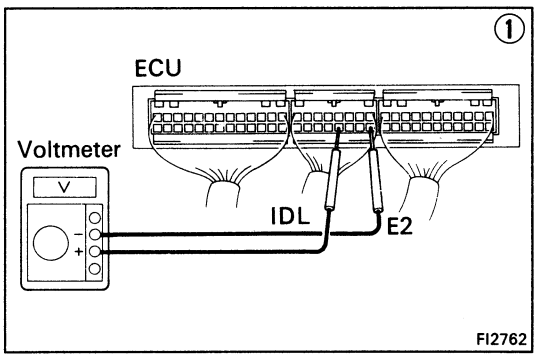

FI2762

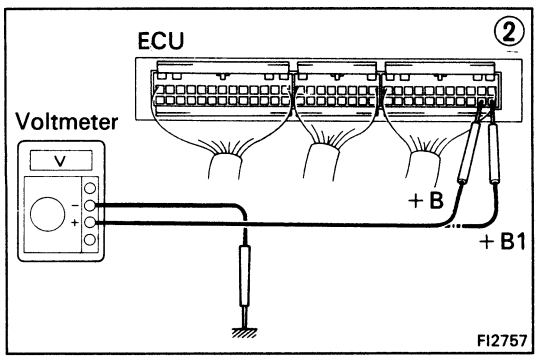

FI2757

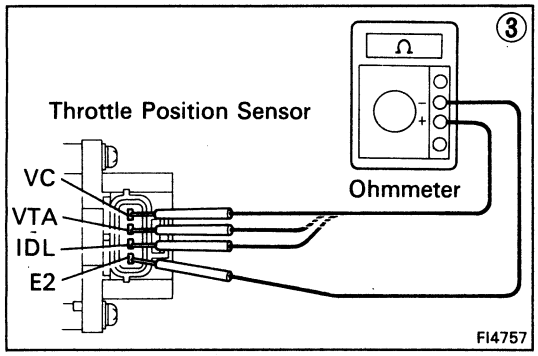

FI4757

● **IDL – E2**

① There is no voltage between ECU terminals IDL and E2. **(IG SW ON)** (Throttle valve open)

② Check that there is voltage between ECU terminal +B (+B1) and body ground. **(IG SW ON)**

NO

OK

Check wiring between ECU terminal E1 and body ground.

OK

Try another ECU.

BAD

Repair or replace.

Refer to No.1. (See page FI-70)

BAD

Repair or replace.

OK

③ Check throttle position sensor. (See page FI-141)

BAD

Repair or replace throttle position sensor.

OK

Check wiring between ECU and throttle position sensor.

BAD

OK

Try another ECU.

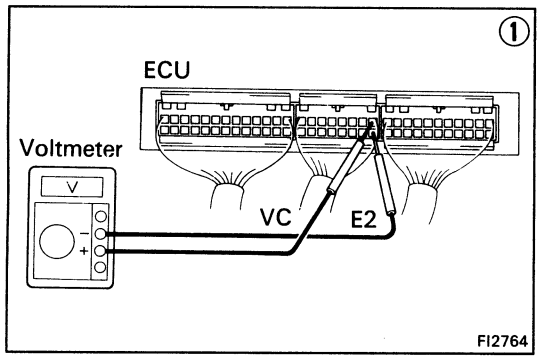

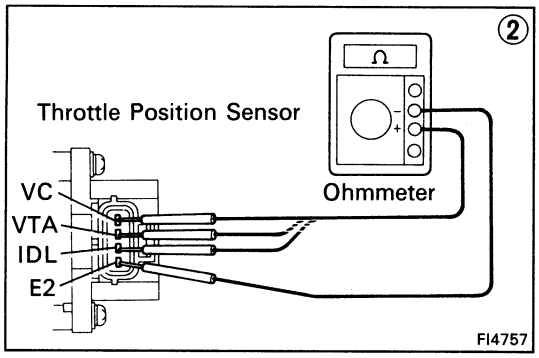

● **VC – E2**

① There is no voltage between ECU terminals VC and E2. **(IG SW ON)**

↓

Check that there is voltage between ECU terminal +B (+B1) and body ground. **(IG SW ON)**

↓ OK → ② Check throttle position sensor. (See page FI-141)

↓ BAD → Repair or replace.

↓ OK → Check wiring between ECU and throttle position sensor.

↓ OK → Try another ECU.

↓ BAD → Repair or replace wiring.

NO → Refer to No.1. (See page FI-70)

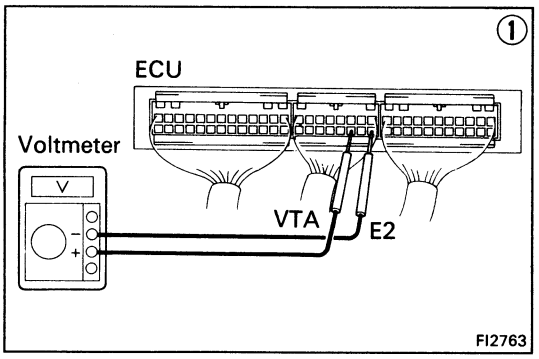

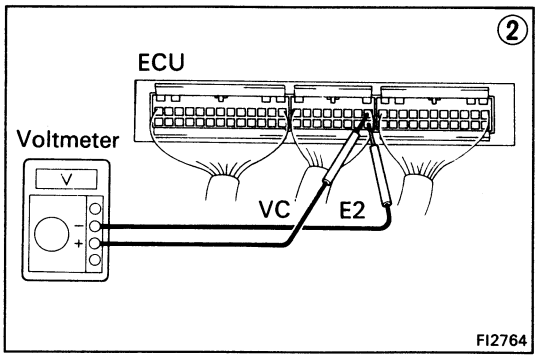

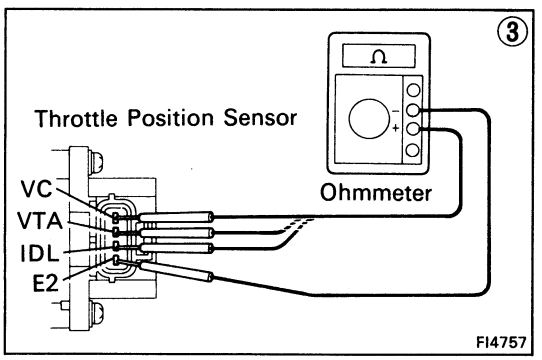

● **VTA – E2**

① There is no specified voltage at ECU terminals VTA and E2. **(IG SW ON)**

↓

② Check that there is voltage between ECU terminals VC and E2. **(IG SW ON)**

↓ NO → Refer to VC – E2 trouble section.

↓ OK

OK →

↓

③ Check throttle position sensor. (See page FI-141) → BAD → Repair or replace.

↓ OK

Check wiring between ECU and throttle position sensor. → BAD → Repair or replace.

↓ OK

Try another ECU.

No.	Terminals	Trouble	Condition	STD voltage
4	PIM – E2	No voltage	IG SW ON	3.3 – 3.9 V
	VC – E2			4.5 – 5.5 V

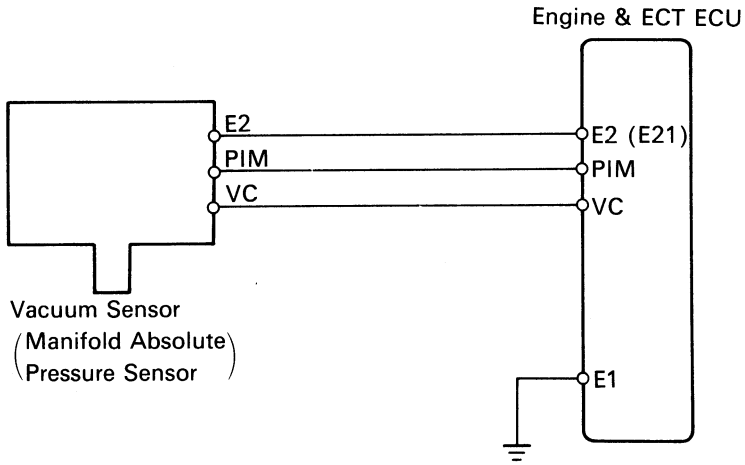

FI1226

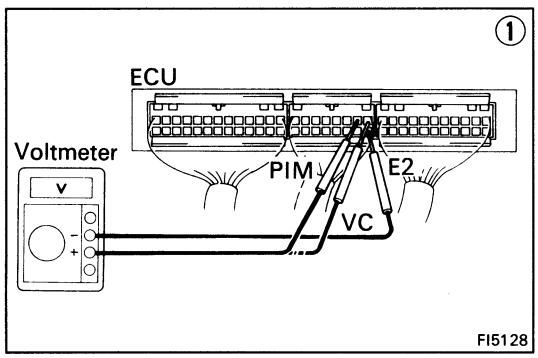

FI5128

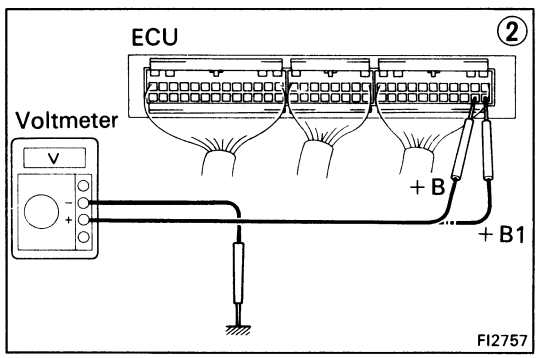

FI2757

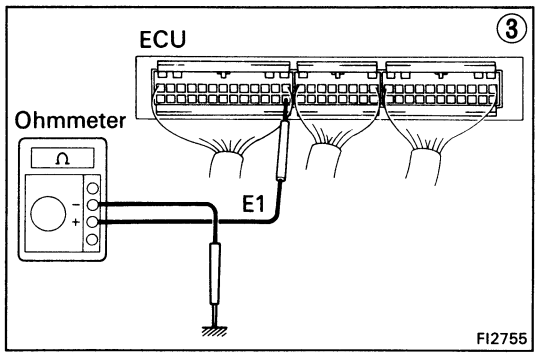

FI2755

● **PIM – E2, VC – E2**

① There is no voltage between ECU terminals PIM or VC and E2. **(IG SW ON)**

② Check that there is voltage between ECU terminal +B (+B1) and body ground. **(IG SW ON)**

OK → ③ Check wiring between ECU terminal E1 and body ground.

NO → Refer to No.1. (See page FI-70)

③ OK → Check vacuum sensor. (See page FI-170)

③ BAD → Repair or replace.

Check vacuum sensor. BAD → Replace vacuum sensor.

Check vacuum sensor. OK → Check wiring between ECU and vacuum sensor.

Check wiring between ECU and vacuum sensor. OK → Try another ECU.

Check wiring between ECU and vacuum sensor. BAD → Repair or replace.

No.	Terminals	Trouble	Condition	STD voltage
5	No.10 – E01 No.20 – E02	No voltage	IG SW ON	10 – 14 V

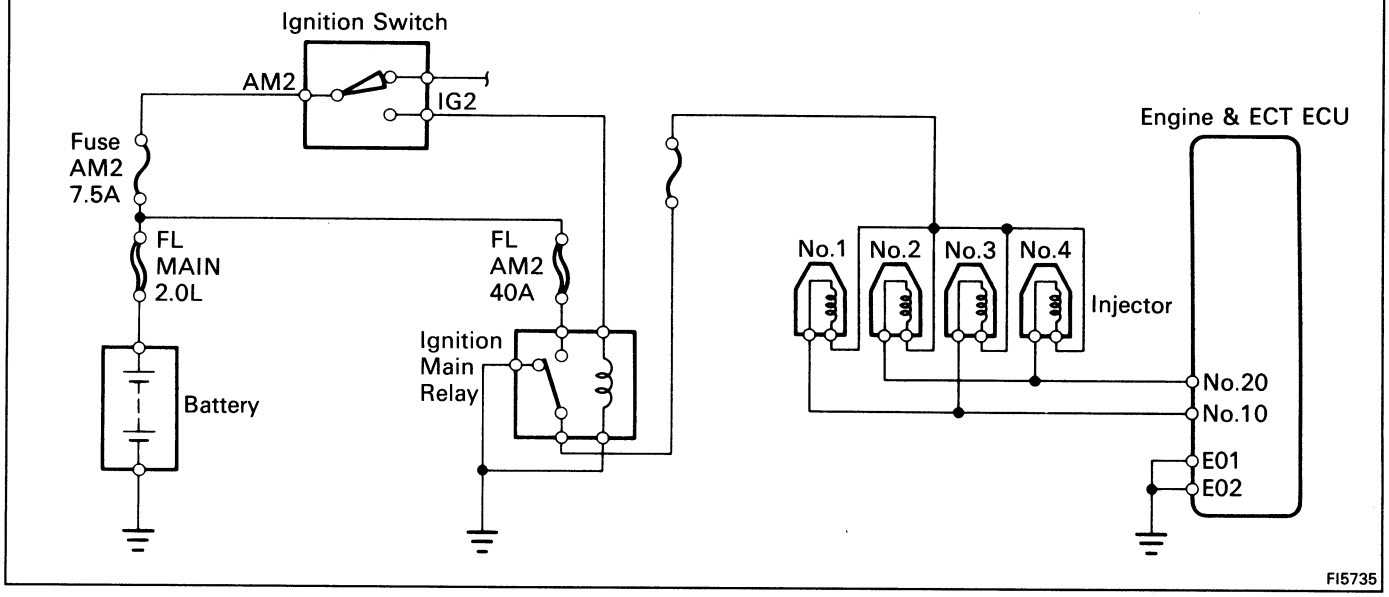

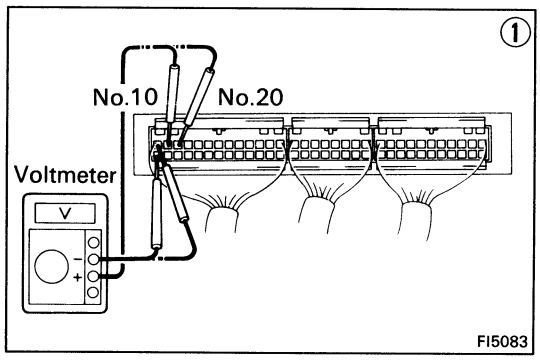

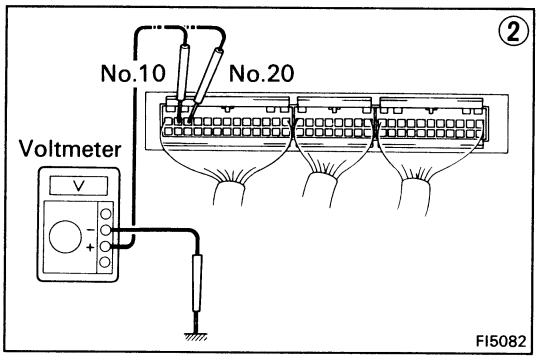

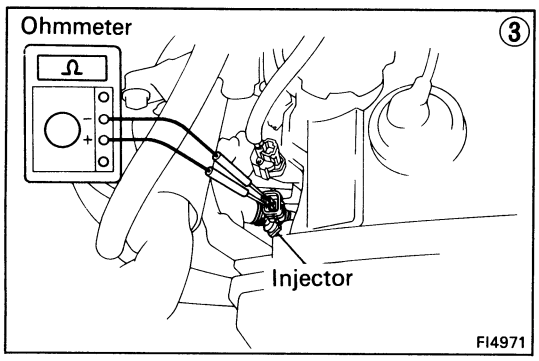

① There is no voltage between ECU terminals No.10 and/or No.20 and E01 and/E02. **(IG SW ON)**

↓

② Check that there is voltage between ECU terminal No.10 and/or No.20 and body ground.

NO → Check wiring between ECU terminal E01 and/or E02 and body ground.
- OK → Try another ECU.
- BAD → Repair or replace.

OK →

Check fuse, fusible links, ignition switch and ignition relay.
- BAD → Repair or replace.

OK →

③ Check resistance of each injector.
STD resistance: Approx. 13.8 Ω

OK → Check wiring between ECU terminal No.10 and/or No.20 and battery.
- BAD → Repair or replace.

OK → Replace injector.

No.	Terminals	Trouble	Condition		STD voltage
6	THA – E2	No voltage	IG SW ON	Intake air temperature 20°C (68°F)	1.7 – 3.1 V

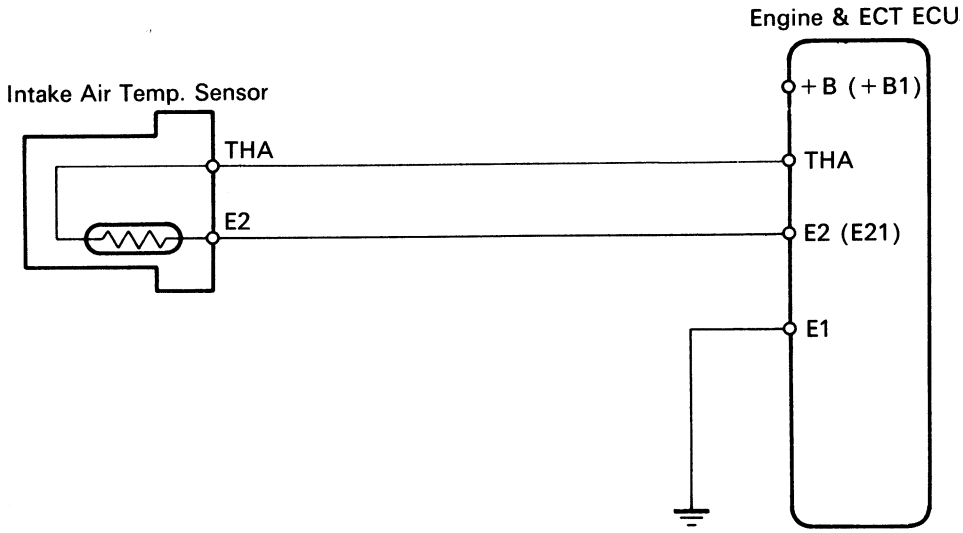

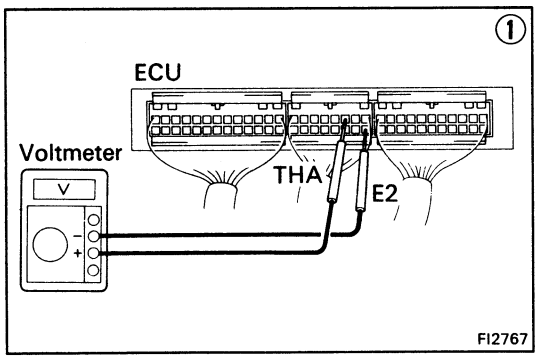

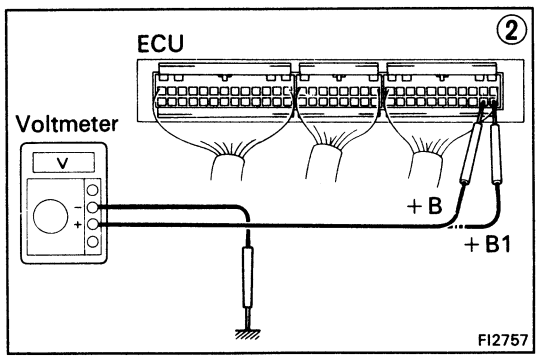

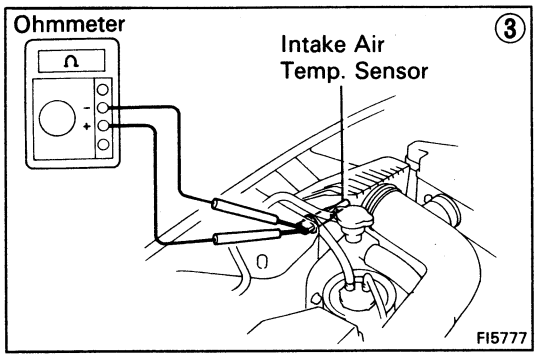

① There is no voltage between ECU terminals THA and E2. **(IG SW ON)**

↓

② Check that there is voltage between ECU terminal +B or +B1 and body ground. **(IG SW ON)**

- OK → Check wiring between ECU terminal E1 and body ground.
  - OK → ③ Check intake air temp. sensor. (See page FI-169)
    - BAD → Replace intake air temp. sensor.
    - OK → Check wiring between ECU and intake air temp. sensor.
      - OK → Try another ECU.
      - BAD → Repair or replace.
  - BAD → Repair or replace.
- NO → Refer to No.1. (See page FI-70)

No.	Terminals	Trouble	Condition		STD voltage
7	THW – E2	No voltage	IG SW ON	Coolant temperature 80°C (176°F)	0.3 – 0.8 V

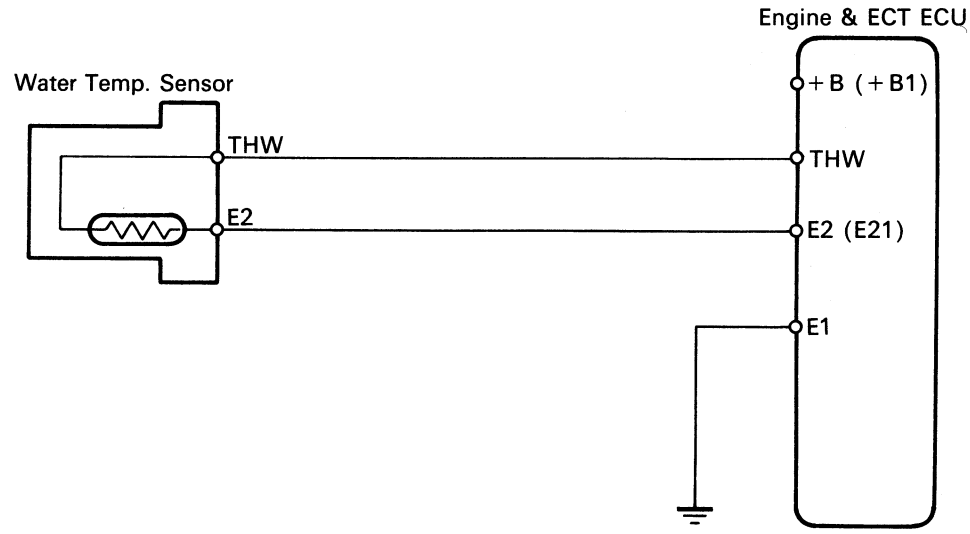

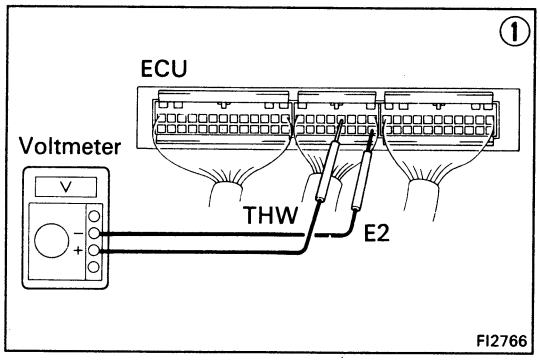

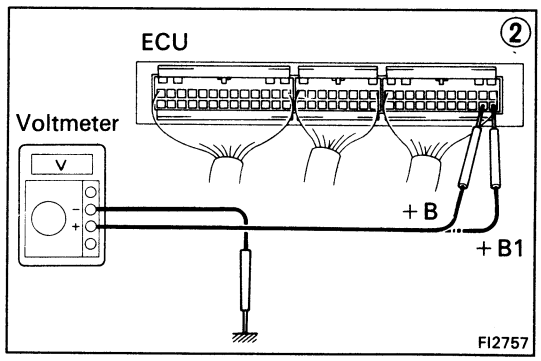

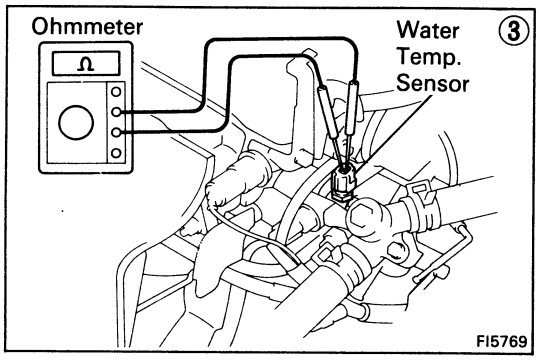

① There is no voltage between ECU terminals THW and E2. **(IG SW ON)**

↓

② Check that there is voltage between ECU terminal +B or +B1 and body ground. **(IG SW ON)**

OK → ↓

NO → Refer to No.1. (See page FI-70)

↓

Check wiring between ECU terminal E1 and body ground.

OK → ↓

BAD → Repair or replace.

↓

③ Check water temp. sensor. (See page FI-168)

BAD → Replace water temp. sensor.

OK → ↓

Check wiring between ECU and water temp. sensor.

OK → ↓

Try another ECU.

BAD → Repair or replace.

No.	Terminals	Trouble	Condition	STD voltage
8	STA – E1	No voltage	Cranking	6 – 14 V

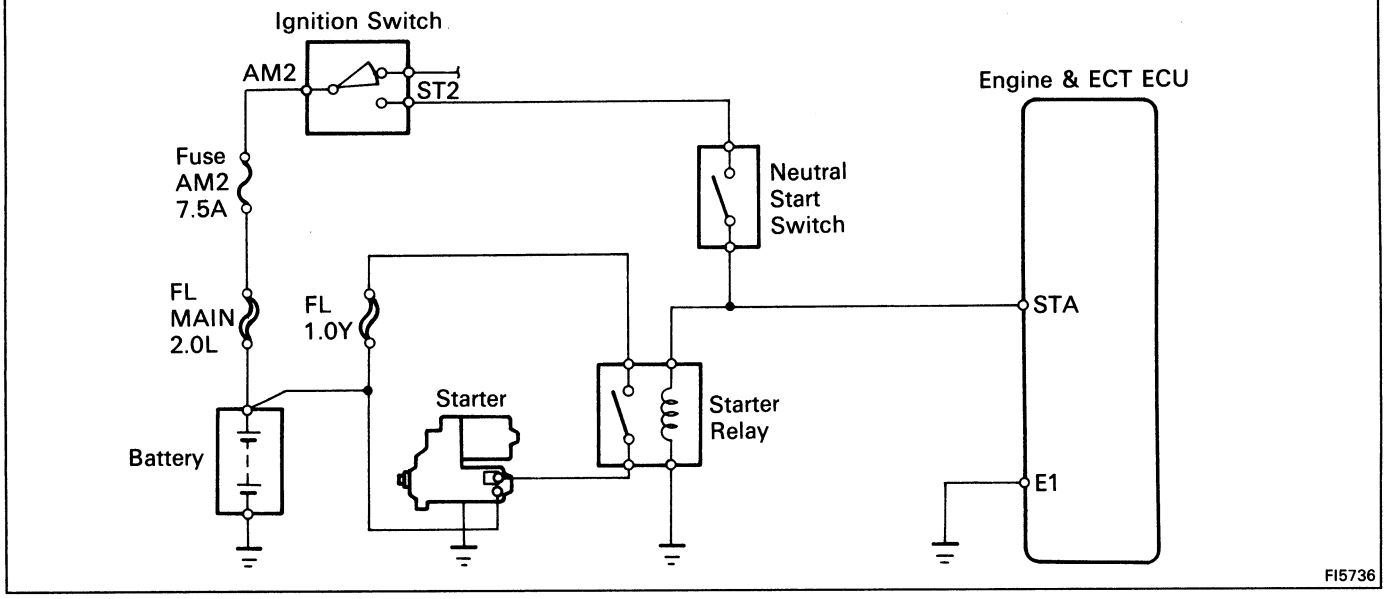

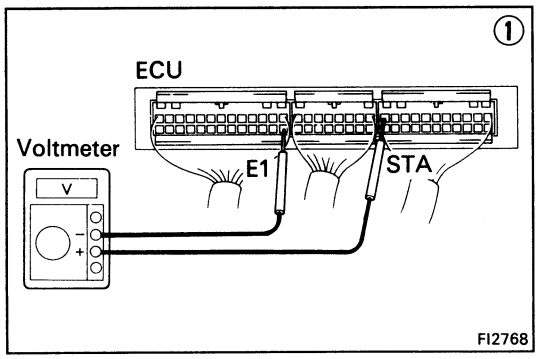

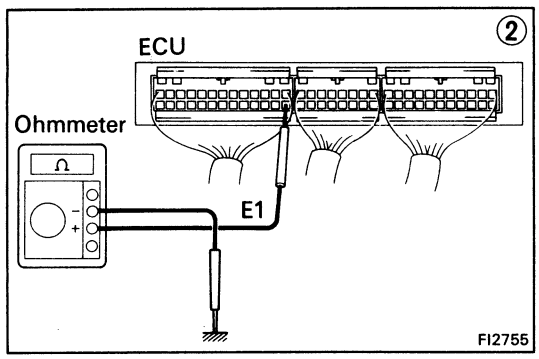

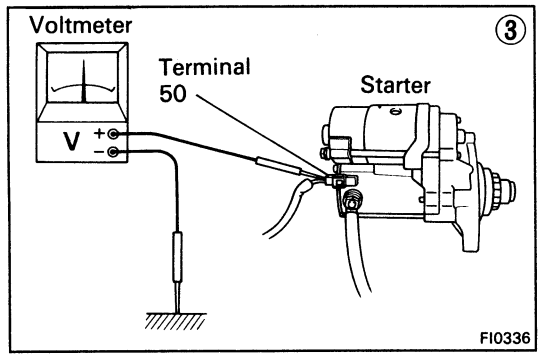

① There is no voltage between eCU terminals STA and E1. **(IG SW START)**

Check starter operation.
- OK → Check wiring between ECU terminal STA and ignition switch terminal ST2.
  - OK → ② Check wiring between ECU terminal E1 and body ground.
    - OK → Try another ECU.
    - BAD → Repair or replace.
  - BAD → Repair or replace.
- BAD → Check fuse, fusible links, battery, wiring, ignition switch, starter relay and neutral start switch.
  - BAD → Repair or replace.
  - OK → ③ Check that there is voltage at terminal 50 of starter. **(IG SW START) STD voltage: 6 – 14 V**
    - OK → Check starter.
    - NO → Check wiring between ignition switch terminal ST2 and starter terminal 50.

No.	Terminals	Trouble	Condition	STD voltage
9	IGT – E1	No voltage	Idling	0.8 – 1.2 V

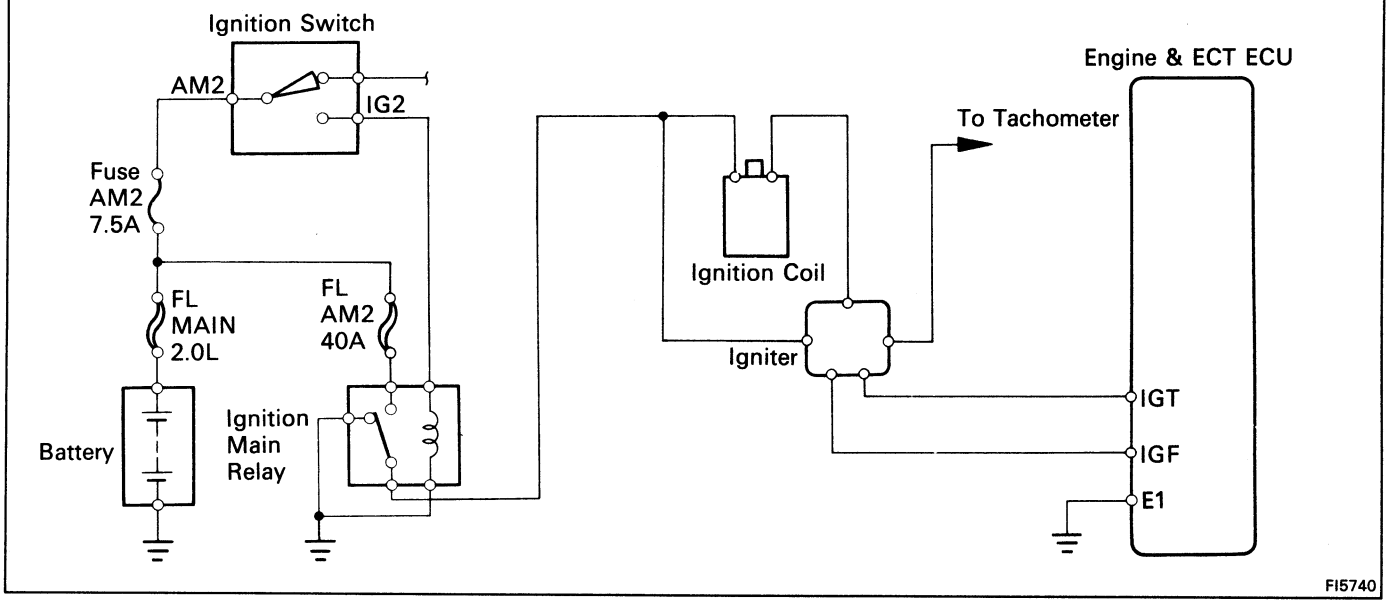

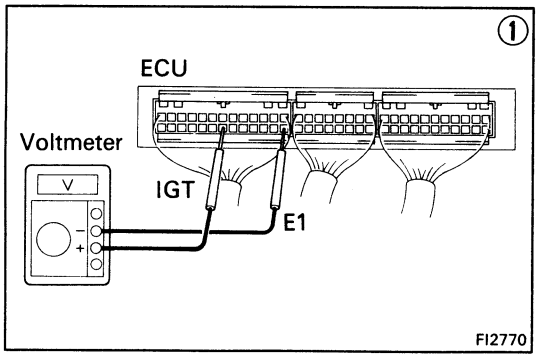

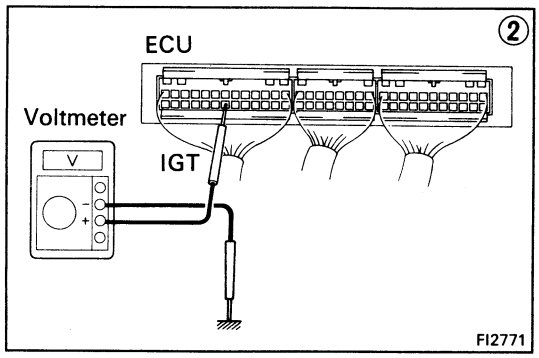

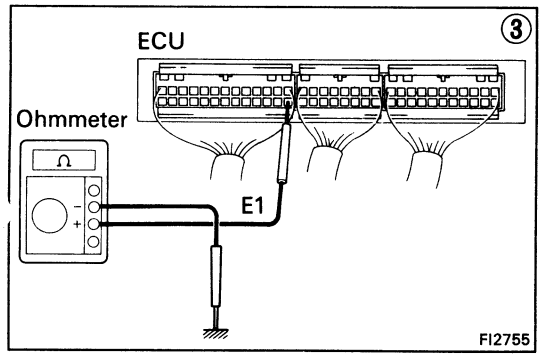

① There is no voltage between ECU terminals IGT and E1. **(Idling)**

↓

② Check that there is voltage between ECU terminal IGT and body ground. **(Idling)**

NO → ↓

OK → ③ Check wiring between ECU terminal E1 and body ground. → BAD → Repair or Replace.

OK → Try another ECU.

↓

Check fuse, fusible links, ignition switch and ignition main relay. → BAD → Repair or replace.

OK → ↓

Check distributor. (See page IG-13) → BAD → Repair or replace.

OK → ↓

Check wiring between ECU and battery. → BAD → Repair or replace.

OK → ↓

Check igniter. (See page IG-13) → BAD → Repair or replace.

No.	Terminals	Trouble	Condition	STD voltage
10	ISCC – E1 ISCO	No voltage	IG SW ON	8 – 14 V

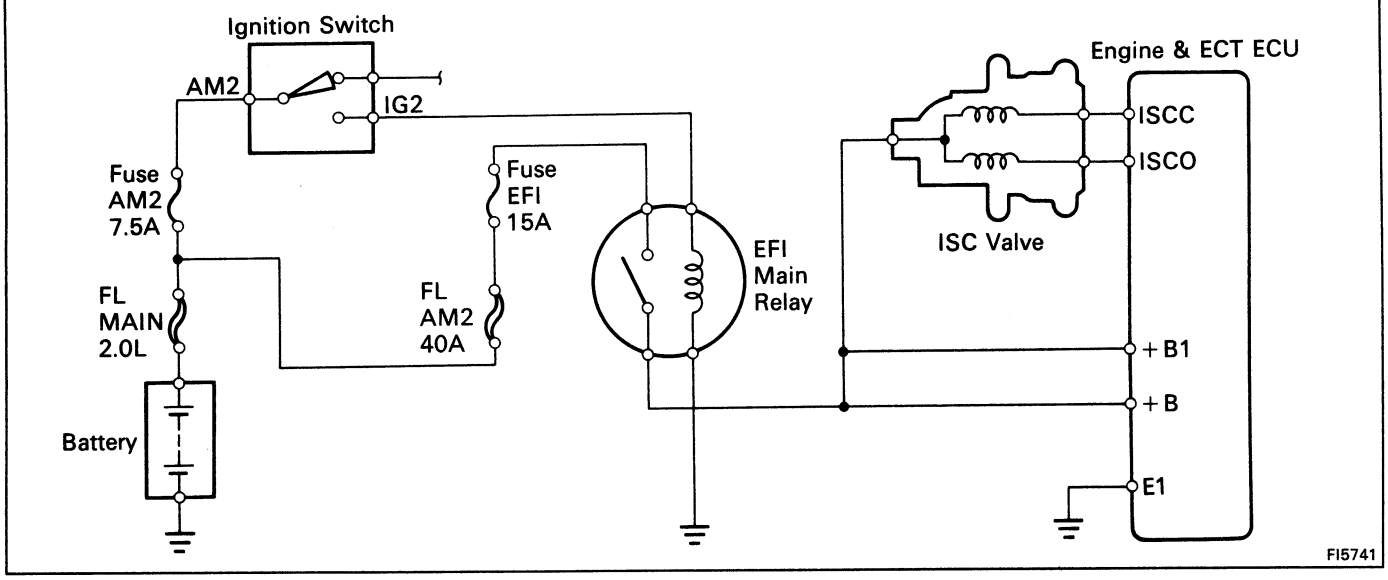

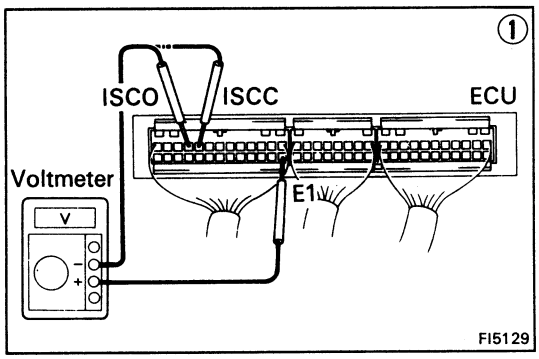

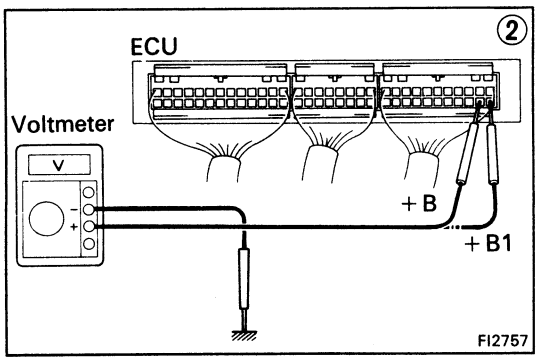

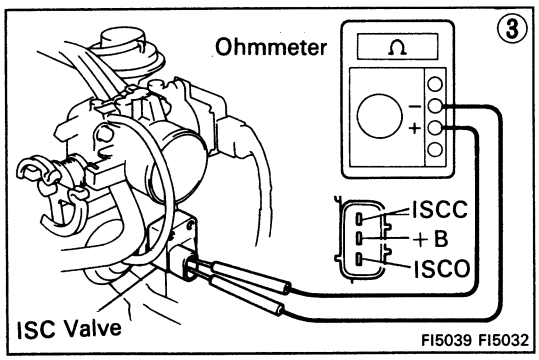

① There is no voltage between ECU terminals ISCC or ISCO and E1. **(IG SW ON)**

↓

② Check that there is voltage between ECU terminal +B or +B1 and body ground. **(IG SW ON)**

OK ↓

NO → Refer to No.1. (See page FI-70)

↓

③ Check resistance between ISC valve terminals +B and ISCC or ISCO. **STD resistance: 19.3 – 22.3 Ω**

BAD → Replace ISC valve.

OK ↓

Check wiring between ECU and ISC valve.

BAD → Repair or replace wiring.

OK ↓

Try another ECU.

No.	Terminals	Trouble	Condition	STD voltage
11	W – E1	No voltage	No trouble ("CHECK" engine warning light off) and engine running.	10 – 14 V

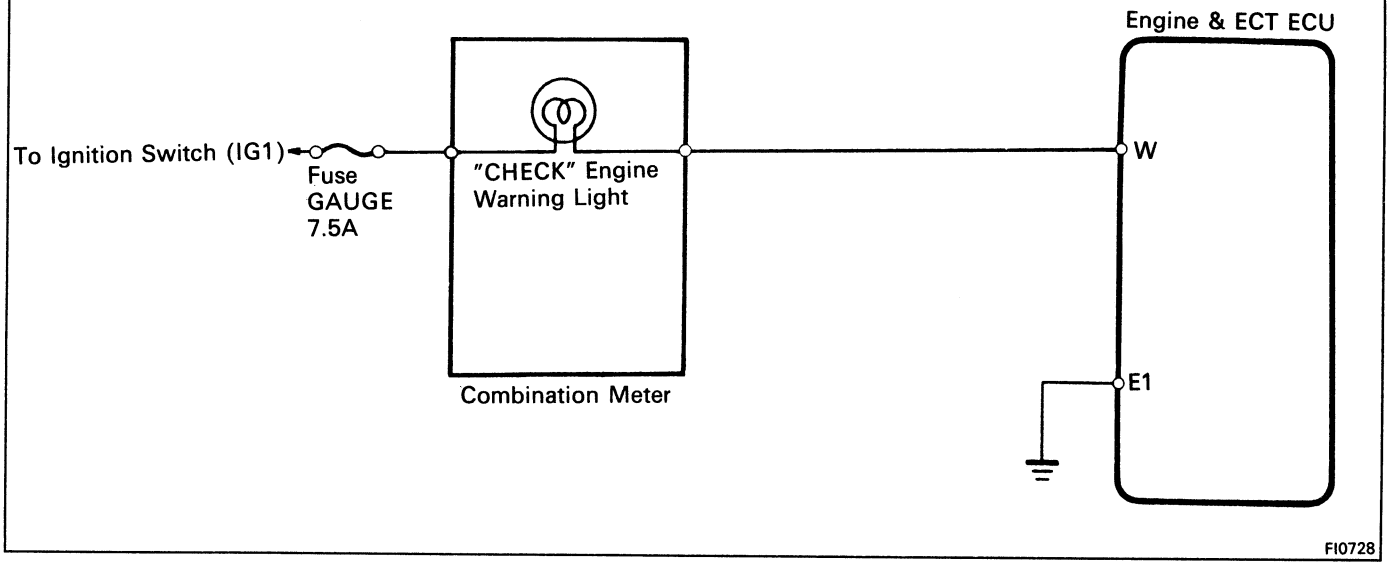

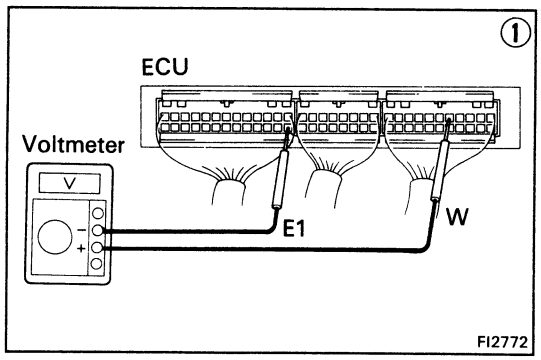

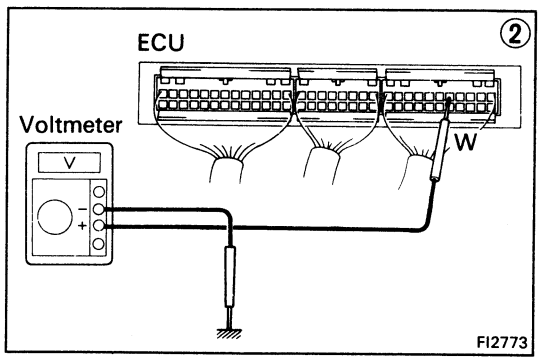

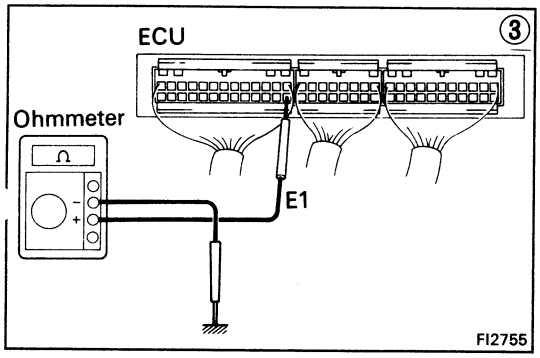

① There is no voltage between ECU terminals W and E1. **(Idling)**

↓

② Check that there is voltage between ECU terminal W and body ground.

NO → ↓ OK

③ Check wiring between ECU terminal E1 and body ground.

OK → Try another ECU.

BAD → Repair or replace.

Check fuse GAUGE (7.5A) and check engine warning light.

OK → ↓ BAD → Repair or replace.

Fuse blows again.

Check wiring between ECU terminal W and fuse.

BAD → Repair or replace.

No.	Terminals	Trouble	Condition	STD voltage
12	A/– E1	No voltage	Air conditioning ON	8 – 14 V

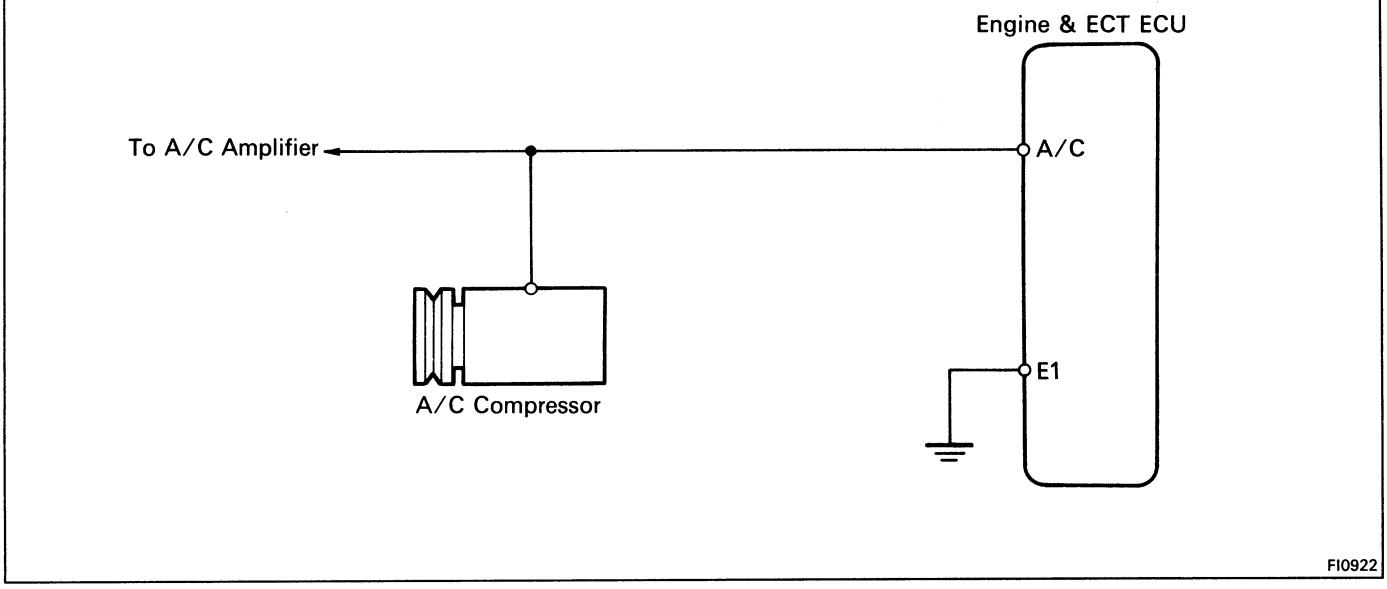

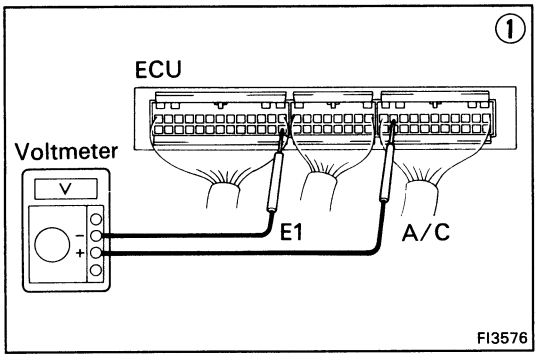

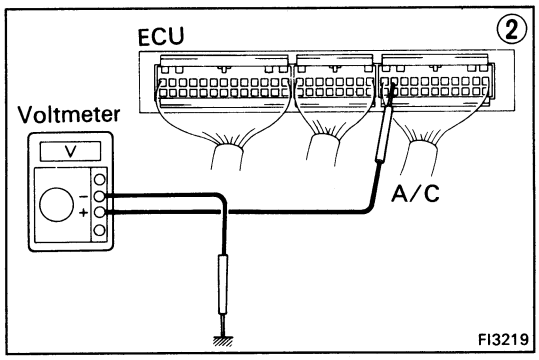

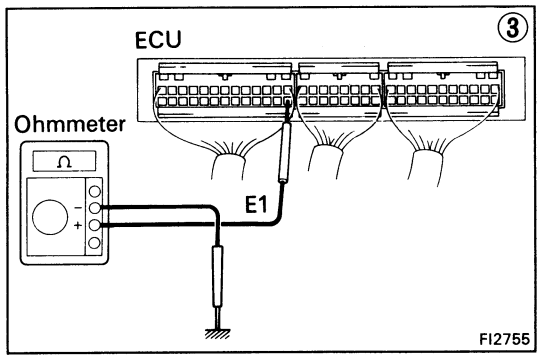

① There is no voltage between ECU terminal A/C and E1. **(Air conditioning ON)**

② Check that there is voltage between ECU terminal A/C and body Ground.

OK → ③ Check wiring between ECU terminal E1 and body ground.

③ OK → Try another ECU.

③ BAD → Repair or replace.

② OK → Check compressor running.

Check compressor running. BAD → Check that there is voltage between amplifier terminal and body ground.

Check compressor running. → Check wiring between ECU terminal A/C and amplifier.

Check wiring between ECU terminal A/C and amplifier. BAD → Repair or replace.

Check that there is voltage between amplifier terminal and body ground. BAD → Repair or replace.

Check that there is voltage between amplifier terminal and body ground. OK → Check wiring between amplifier and ECU or compressor.

Check wiring between amplifier and ECU or compressor. BAD → Repair or replace.

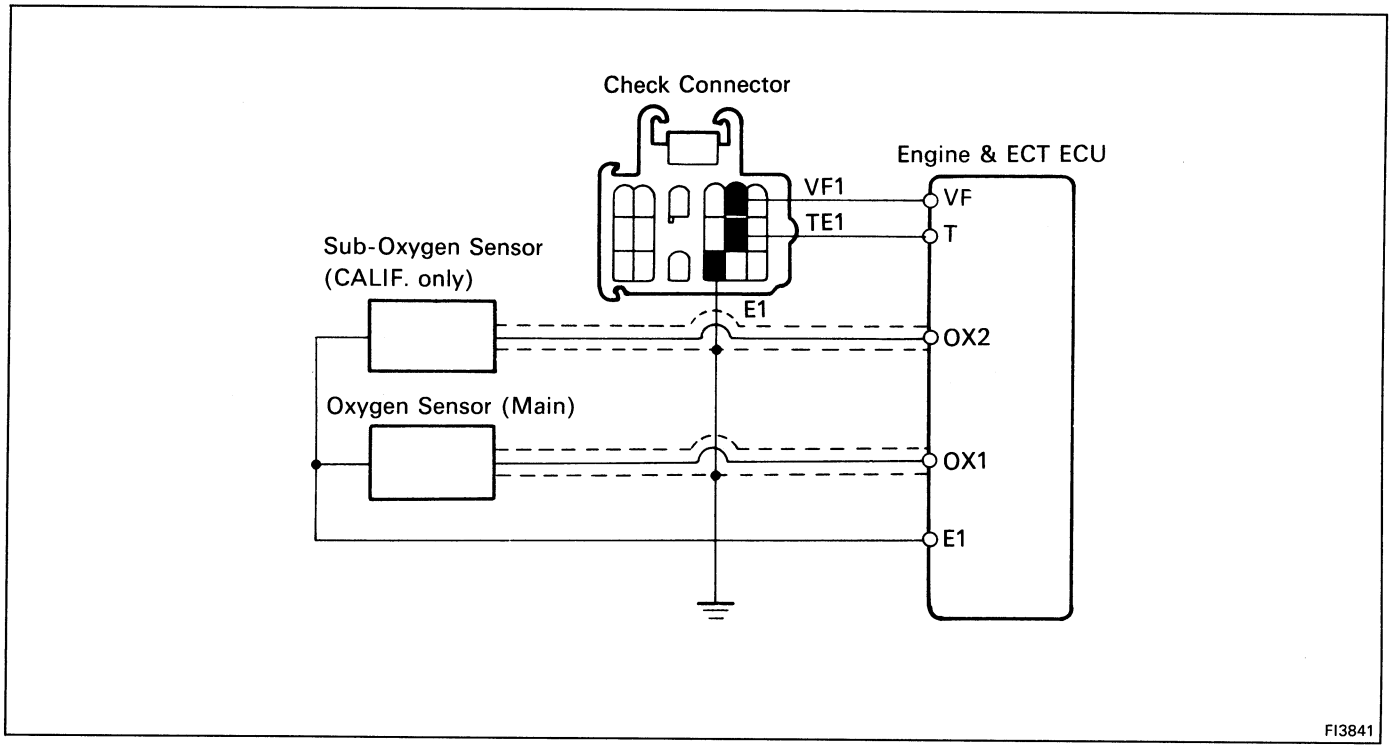

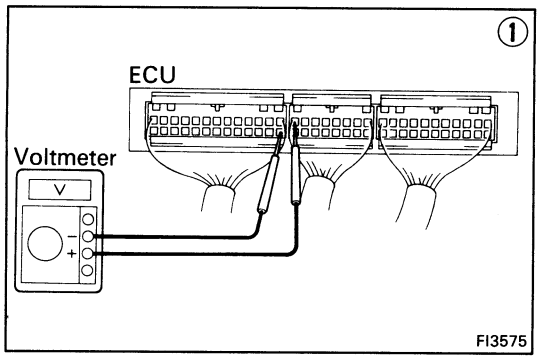

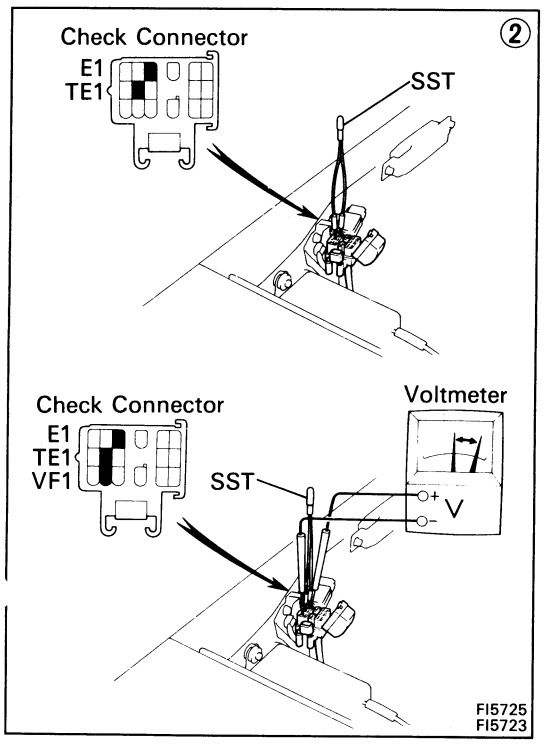

① There is no voltage between ECU terminal VF and E1.

Check that there is voltage between ECU terminal VF and body ground.
- OK → OK → Check wiring between ECU terminal E1 and body ground.
  - OK → Try another ECU.
    - BAD → Repair or replace.
  - BAD → Repair or replace.

Is air leaking into air induction system?
- BAD → Repair air leak.
- OK ↓

Check spark plugs. (See page IG-11)
- BAD → Repair or replace.
- OK ↓

Check distributor and ignition system. (See page IG-4)
- BAD → Repair or replace.
- OK ↓

Check fuel pressure.(See page FI-87)
- BAD → Repair or replace.
- OK ↓

Check injections. (See page FI-120)
- BAD → Repair or replace.
- OK ↓

* Check cold start injector. (See page FI-102)
- BAD → Repair or replace.
- OK ↓

Check vacuum sensor (See page FI-131)
- BAD → Repair or replace.
- OK ↓

② Check operation of oxygen sensor(s). (See pages FI-173 and 175)
- BAD → System normal
- BAD ↓

Check wiring between oxygen sensor(s) and ECU.
- BAD → Repair wiring.
- OK ↓

Replace oxygen sensor(s).

* Rich malfunction only

CALIF. only

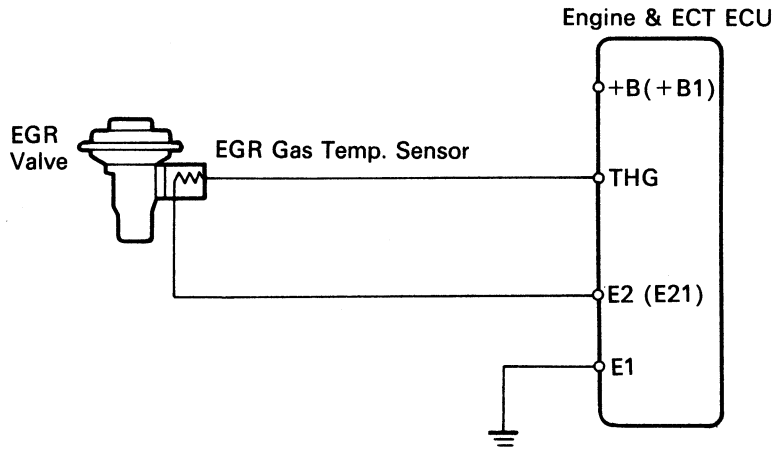

FI2680

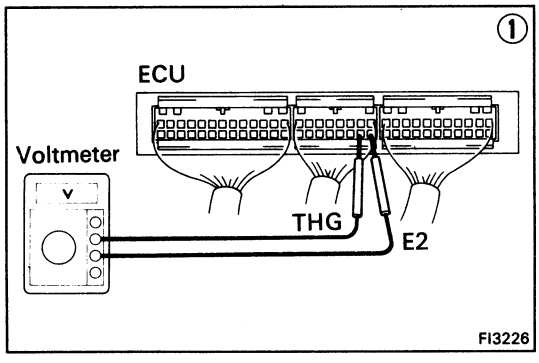

FI3226

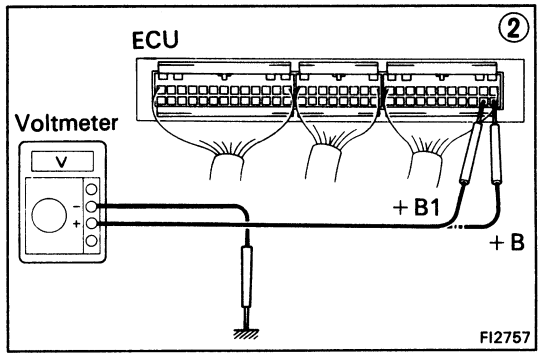

FI2757

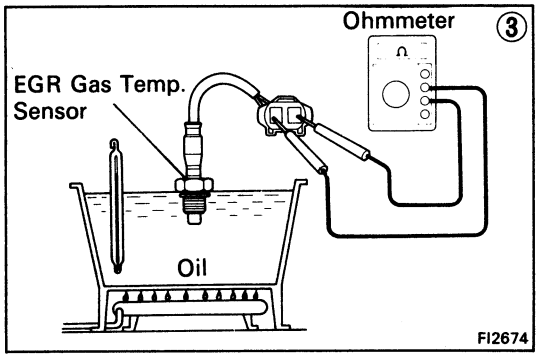

FI2674

① There is no voltage between ECU terminals THG and E2. **(IG SW ON)**

↓

② Check that there is voltage between ECU terminal +B or +B1 and body ground. **(IG SW ON)**

OK → ↓

NO → Refer to No.1. (See page FI-70)

↓

Check wiring between ECU terminal E1 and body ground.

OK → ↓

BAD → Repair or replace.

↓

Check EGR system. (See page EC-24)

BAD → Repair or replace.

OK → ↓

③ Check EGR gas temp. sensor. (See page FI-172)

BAD → Replace EGR gas temp. sensor.

OK → Check wiring between ECU and EGR gas temp. sensor.

OK → Try another ECU.

BAD → Repair or replace.

FUEL SYSTEM

Fuel Pump

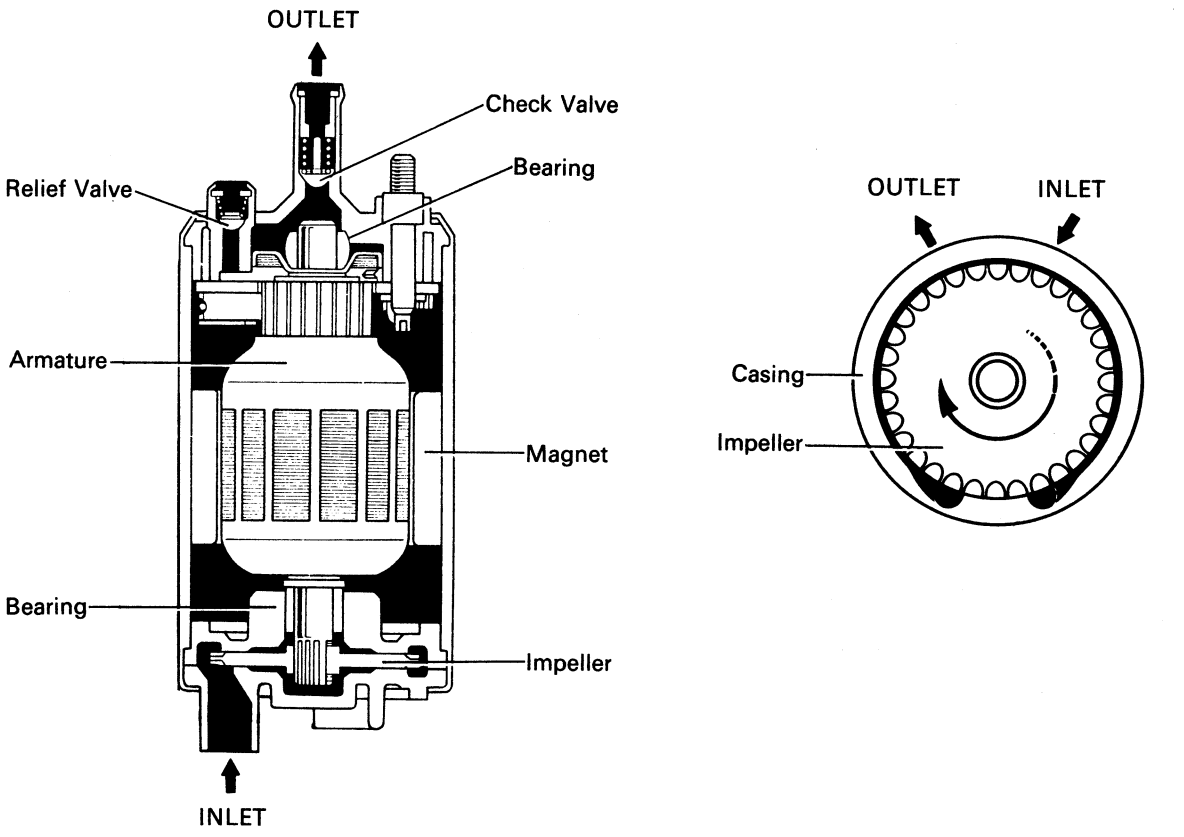

FI0530 FI1479

3S-GTE

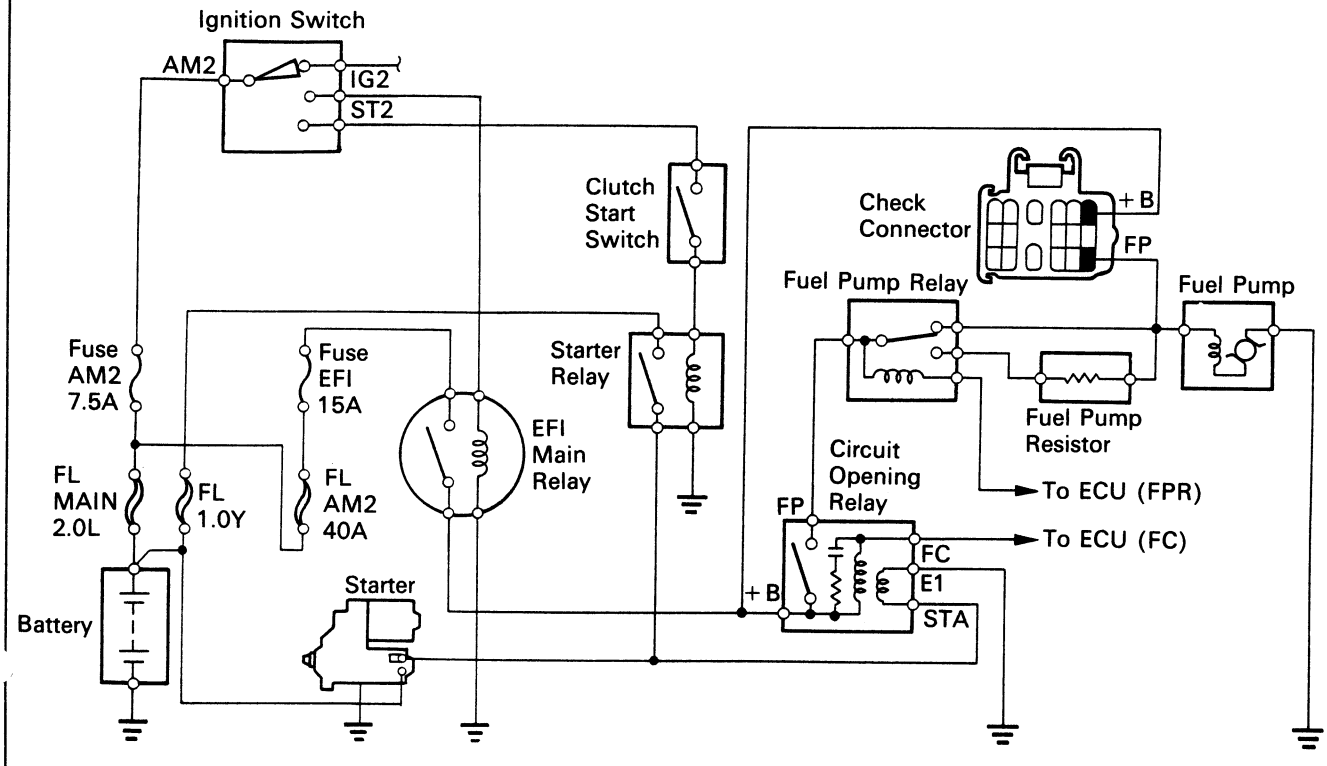

FI5778

5S-FE

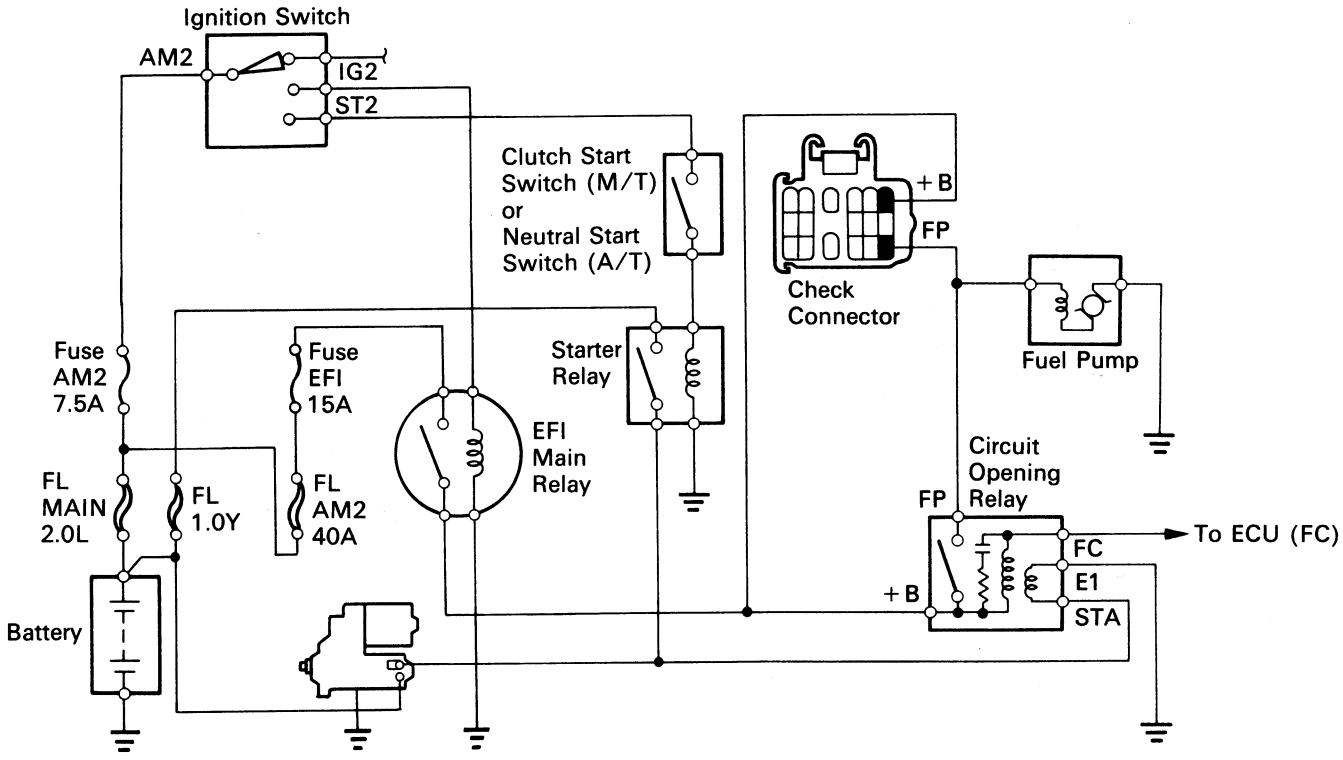
Ignition Switch
AM2
IG2
ST2
Clutch Start Switch (M/T) or Neutral Start Switch (A/T)
+B
FP
Check Connector
Fuel Pump
Fuse AM2 7.5A
Fuse EFI 15A
Starter Relay
EFI Main Relay
Circuit Opening Relay
FP
FL MAIN 2.0L
FL 1.0Y
FL AM2 40A
To ECU (FC)
FC
E1
STA
+B
Battery

FI5779

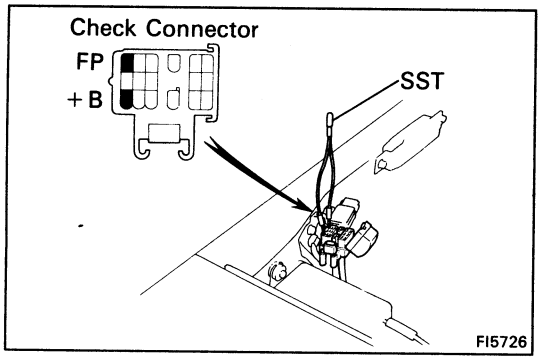

ON-VEHICLE INSPECTION

1. **CHECK FUEL PUMP OPERATION**

(a) Using SST, connect terminals +B and FP of the check connector.

SST 09843-18020

(b) Turn the ignition switch ON.

NOTICE: Do not start the engine.

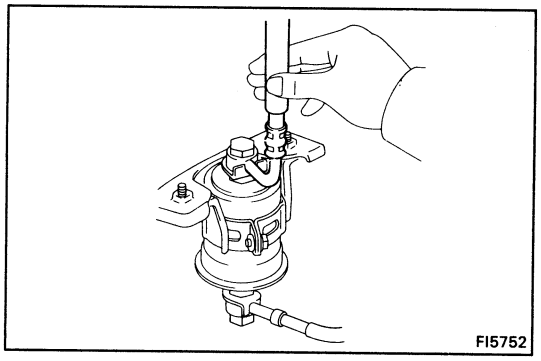

(c) Check that there is pressure in the hose from the fuel filter.

HINT: At this time, you will hear fuel return noise.

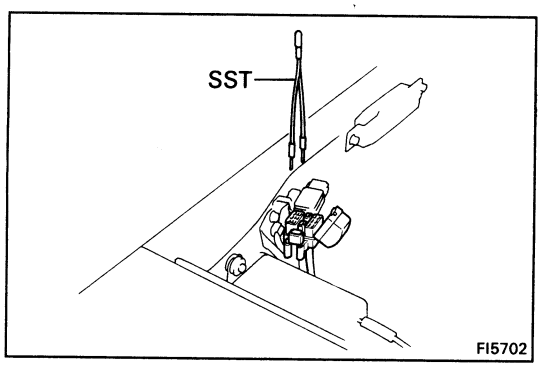

(d) Turn the ignition switch OFF.

(e) Remove SST.

SST 09843-18020

If there is no pressure, check the following parts:

- Fusible links
- Fuses (EFI 15A, AM2 7.5A, 1.0Y)
- EFI main relay
- Fuel pump
- Fuel pump relay (3S-GTE)
- Fuel pump resistor (3S-GTE)
- ECU
- Wiring connections

2. **(3S-GTE)**
CHECK FUEL PRESSURE

(a) Check the battery voltage above 12 volts.

(b) Disconnect the cable from the negative (–) terminal of the battery.

CAUTION: Work must be started after approx. 20 seconds or longer from the time the ignition switch is turned to the "LOCK" position and the negative (–) terminal cable is disconnected from the battery.

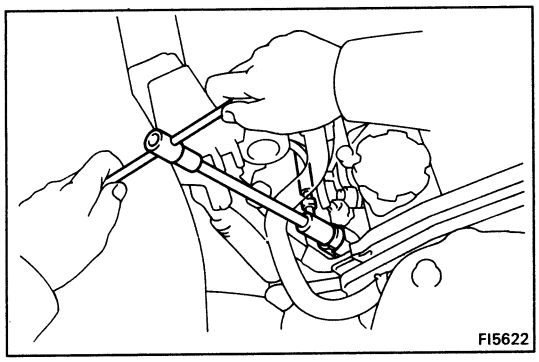

(c) Remove the union bolt and two gaskets, and disconnect the fuel inlet hose from the delivery pipe.

HINT:

- Put a suitable container or shop towel under the cold start injector pipe.
- Slowly loosen the union bolt.

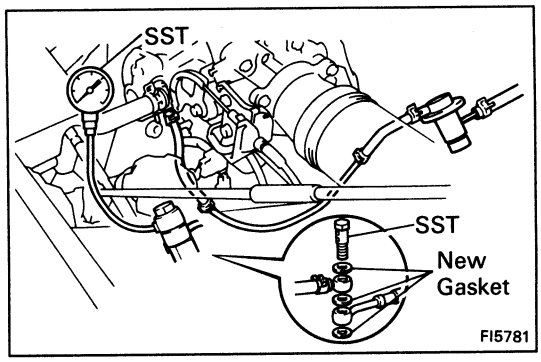

(d) Install SST (pressure gauge) to the delivery pipe with two new gaskets and the union bolt.

SST 09268-45012

Torque: 300 kg-cm (22 ft-lb, 29 N·m)

(e) Wipe off any splattered gasoline.

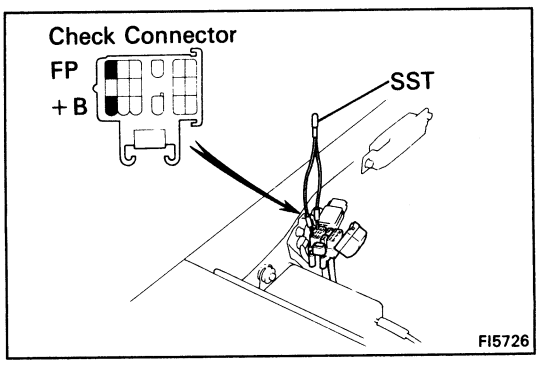

(f) Using SST, connect terminals +B and FP of the check connector.

SST 09843-18020

(g) Reconnect the battery negative (–) cable.

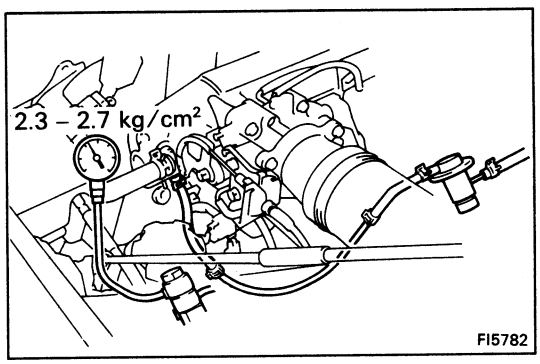

(h) Turn the ignition switch ON.

(i) Measure the fuel pressure.

Fuel pressure: 2.3 – 2.7 kg/cm² (33 – 38 psi, 226 – 265 kPa)

If pressure is high, replace the fuel pressure regulator.

If pressure is low, check the following parts:

- Fuel hoses and connections
- Fuel pump
- Fuel filter
- Fuel pressure regulator

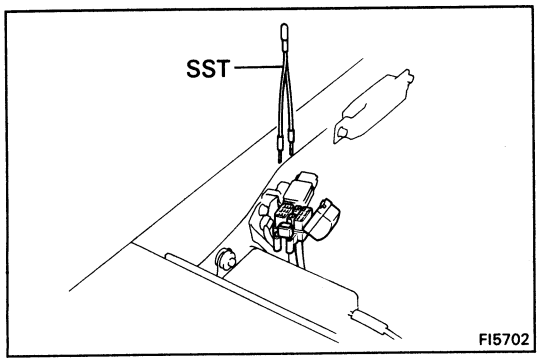

(j) Remove SST.

SST 09843-18020

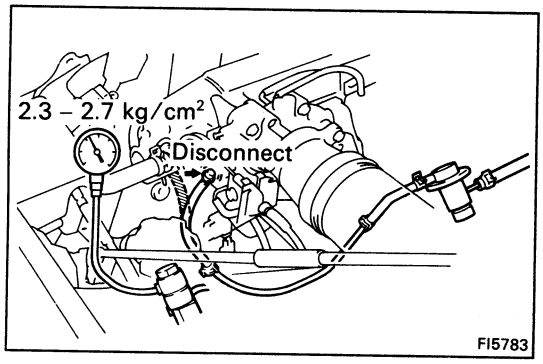

(k) Start the engine.

(l) Disconnect the vacuum sensing hose from the fuel pressure regulator, and plug the hose end.

(m) Measure the fuel pressure at idling.

Fuel pressure: 2.3 – 2.7 kg/cm² (33 – 38 psi, 226 – 265 kPa)

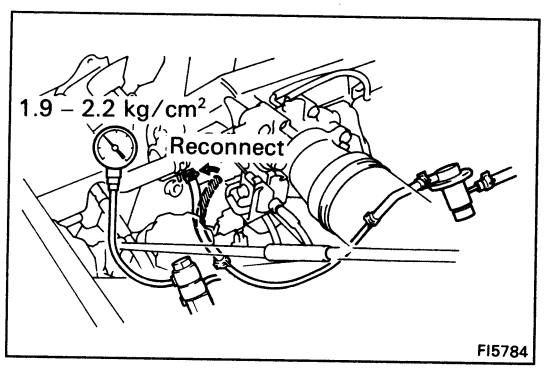

(n) Reconnect the vacuum sensing hose to the fuel pressure regulator and plug the hose end.

(o) Measure the fuel pressure at idling.

Fuel pressure: 1.9 – 2.2 kg/cm² (27 – 31 psi, 186 – 216 kPa)

If pressure is not as specified, check the vacuum sensing hose and fuel pressure regulator.

(p) Stop the engine. Check that the fuel pressure remains 1.5 kg/cm² (21 psi, 147 kPa) or more for 5 minutes after the engine is turned off.

If pressure is not as specified, check the fuel pump, pressure regulator1and/or injector.

(q) After checking fuel pressure, disconnect the battery negative (–) cable and carefully remove the SST to prevent gasoline from splashing.

SST 09268-45012

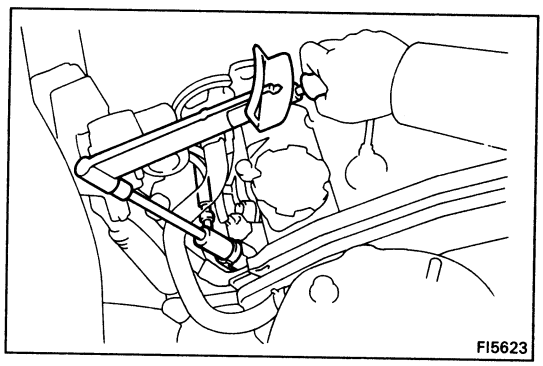

(r) Reconnect the fuel inlet hose with two new gaskets and the union bolt.

Torque: 300 kg-cm (22 ft-lb, 29 N·m)

(s) Reconnect the cable to the negative (–) terminal of the battery.

(t) Check for fuel leakage. (See page FI-9)

3. **(5S-FE)**
CHECK FUEL PRESSURE

(a) Check the battery voltage above 12 volts.

(b) Disconnect the cable from the negative (–) terminal of the battery.

CAUTION: Work must be started after approx. 20 seconds or longer from the time the ignition switch is turned to the "LOCK" position and the negative (–) terminal cable is disconnected from the battery.

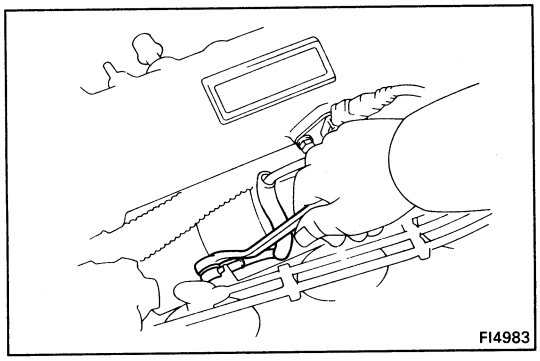

(c) Remove the union bolt and two gaskets, and disconnect the cold start injector pipe from the delivery pipe.

HINT:
- Put a suitable container or shop towel under the cold start injector pipe.
- Slowly loosen the union bolt.

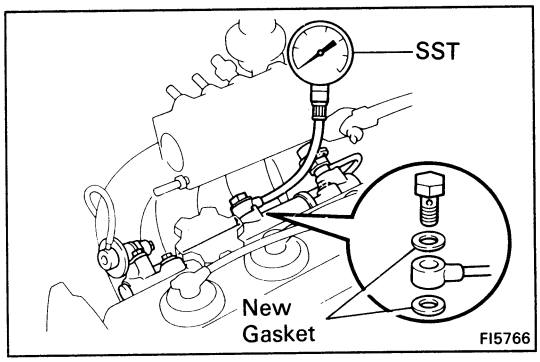

(d) Install SST (pressure gauge) to the delivery pipe with two new gaskets and the union bolt.

SST 09268-45012

Torque: 180 kg-cm (13 ft-lb, 18 N·m)

(e) Wipe off any splattered gasoline.

(f) Disconnect the cold start injector connector.

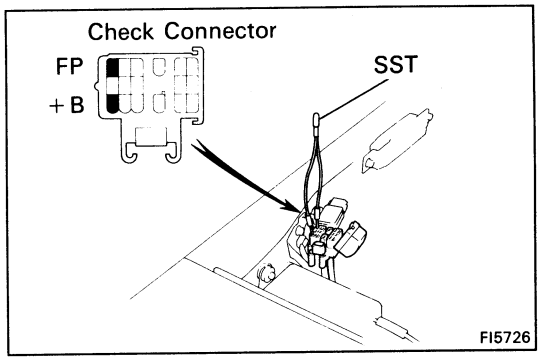

(g) Using SST, connect terminals +B and FP of the check connector.

SST 09843-18020

(h) Reconnect the battery negative (–) cable.

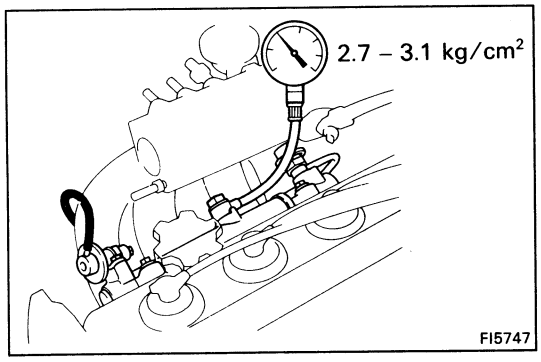

(i) Turn the ignition switch ON.

(j) Measure the fuel pressure.

Fuel pressure: 2.7 – 3.1 kg/cm² (38 – 44 psi, 265 – 304 kPa)

If pressure is high, replace the fuel pressure regulator.

If pressure is low, check the following parts:
- Fuel hoses and connections
- Fuel pump
- Fuel filter
- Fuel pressure regulator

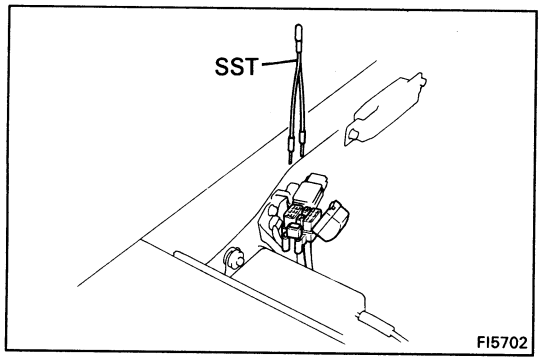

(k) Remove SST.

SST 09843-18020

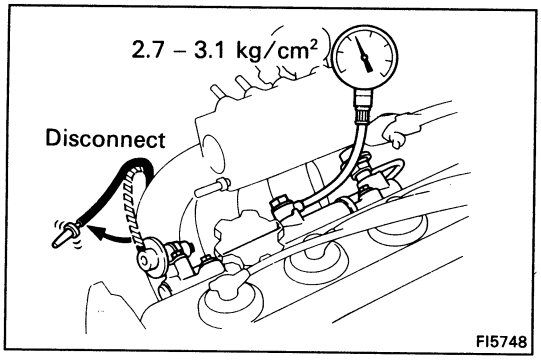

(l) Start the engine.

(m) Disconnect the vacuum sensing hose from the fuel pressure regulator.

(n) Measure the fuel pressure at idling.

Fuel pressure: 2.7 – 3.1 kg/cm² (38 – 44 psi, 265 – 304 kPa)

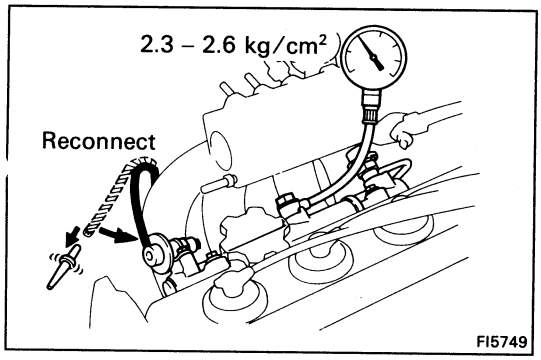

(o) Reconnect the vacuum sensing hose to the fuel pressure regulator and plug the hose end.

(p) Measure the fuel pressure at idling.

Fuel pressure: 2.3 – 2.6 kg/cm² (33 – 37 psi, 226 – 255 kPa)

If pressure is not as specified, check the vacuum sensing hose and fuel pressure regulator.

(q) Stop the engine. Check that the fuel pressure remains 1.5 kg/cm² (21 psi, 147 kPa) or more for 5 minutes after the engine is turned off.

If pressure is not as specified, check the fuel pump, pressure regulator and/or injector.

(r) After checking fuel pressure, disconnect the battery negative (–) cable and carefully remove the SST to prevent gasoline from splashing.

SST 09268-45012

(s) Reconnect the cold start injector connector.

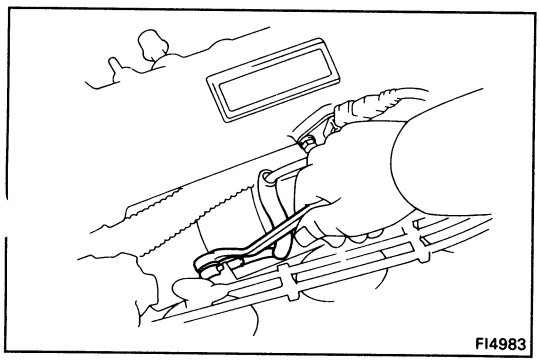

(t) Connect the cold start injector pipe with two new gaskets and the union bolt.

Torque: 180 kg-cm (13 ft-lb, 18 N·m)

(u) Reconnect the cable to the negative (–) terminal of the battery.

(v) Check for fuel leakage. (See page FI-9)

REMOVAL OF FUEL PUMP

CAUTION: Do not smoke or work near an open flame when working on the fuel pump.

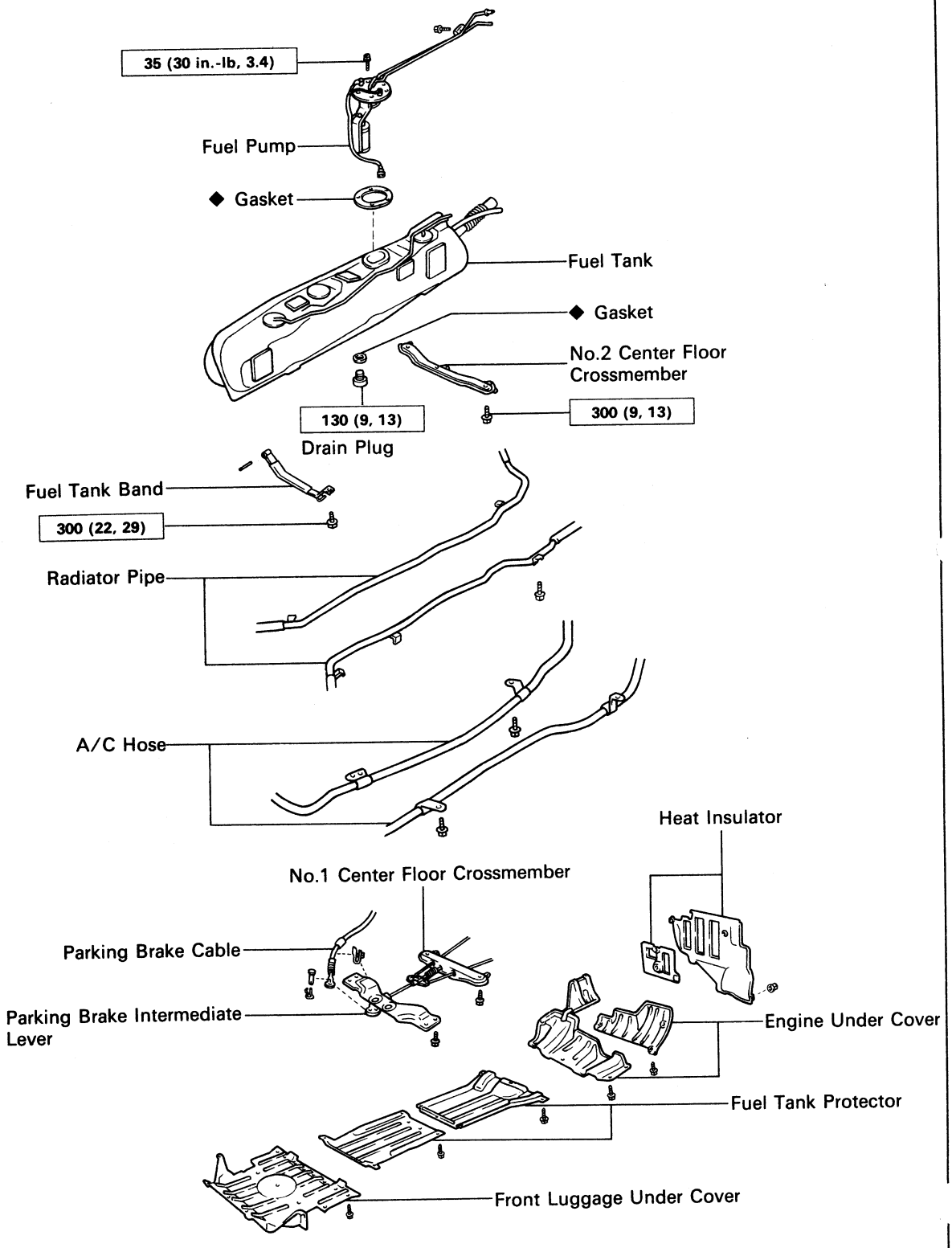

kg-cm (ft-lb, N·m) : Specified Torque

◆ Non-reusable part

FI5801

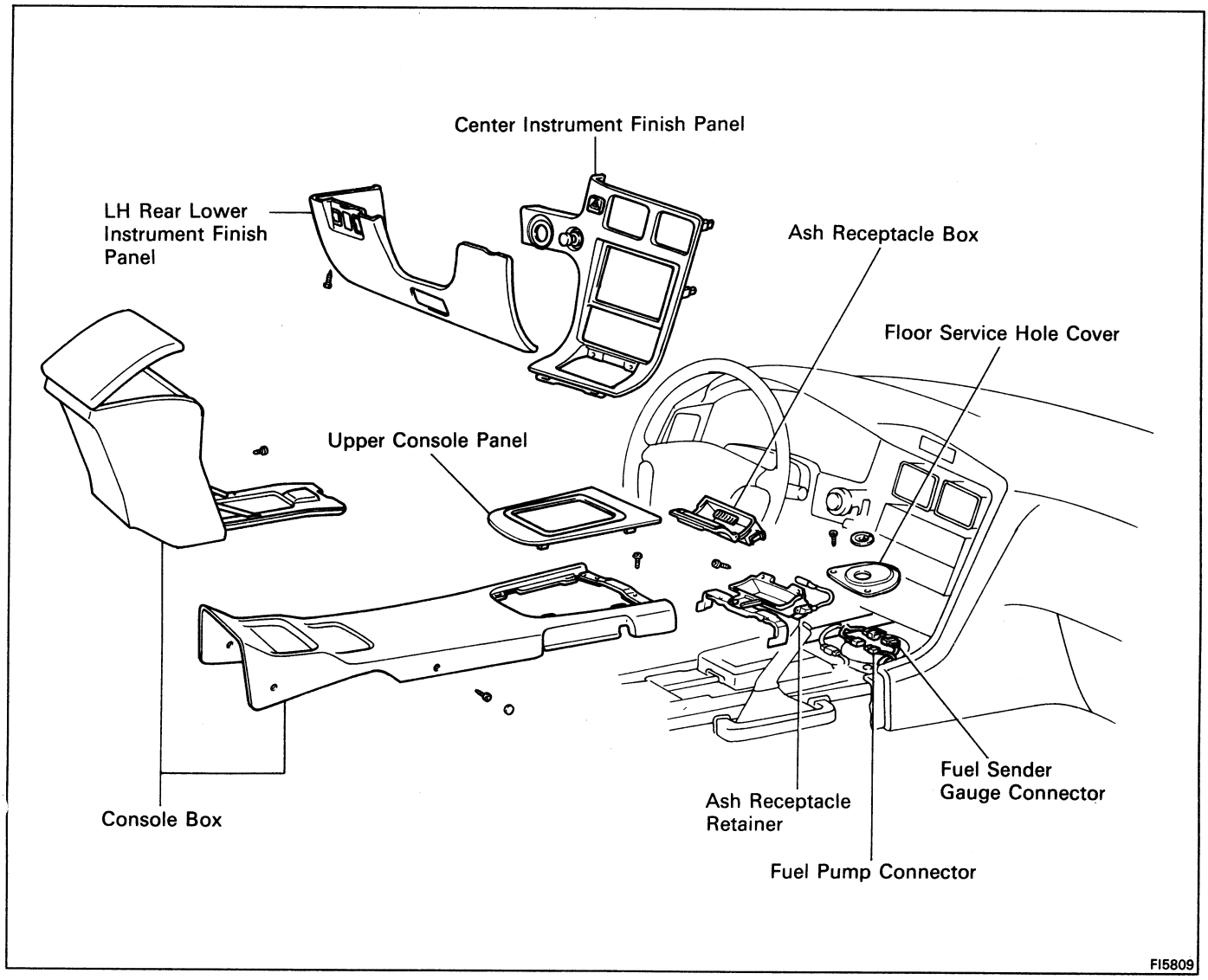

1. DISCONNECT CABLE FROM NEGATIVE TERMINAL OF BATTERY

CAUTION: Work must be started after approx. 20 seconds or longer from the time the ignition switch is turned to the "LOCK" position and the negative (–) terminal cable is disconnected from the battery.

2. DISCONNECT FUEL PUMP CONNECTOR AND FUEL SENDER GAUGE CONNECTOR

(a) Remove the following parts:
- Console boxes
- LH lower instrument finish panel
- Center instrument finish panel
- Ash receptacle box
- Ash receptacle retainer

(b) Disconnect the fuel pump connector and fuel sender gauge connector.

(c) Remove the two screws and floor service hole cover.

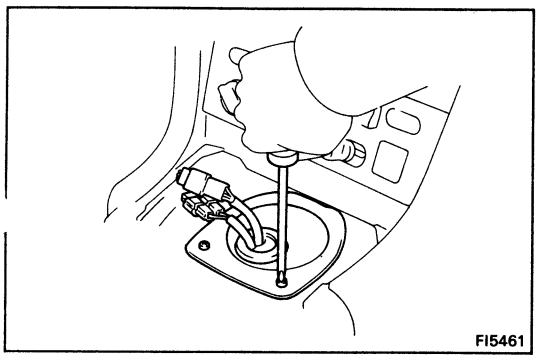

3. **REMOVE ENGINE UNDER COVERS**

4. **REMOVE FRONT LUGGAGE UNDER COVER**

5. **REMOVE FUEL TANK PROTECTORS**

6. **DRAIN FUEL**

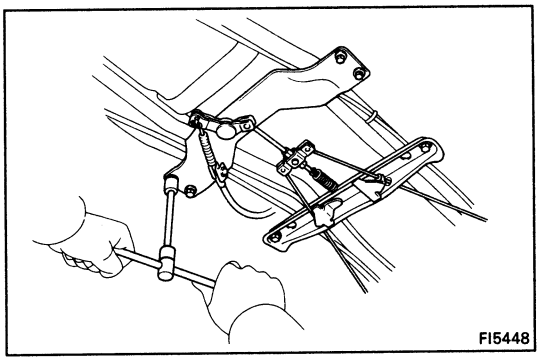

7. **REMOVE PARKING BRAKE INTERMEDIATE LEVER AND NO.1 CENTER FLOOR CROSSMEMBER**
   (a) Remove the four bolts and intermediate lever.
   (b) Remove the two bolts and crossmember.
   (c) Disconnect the parking brake cable from the intermediate lever.

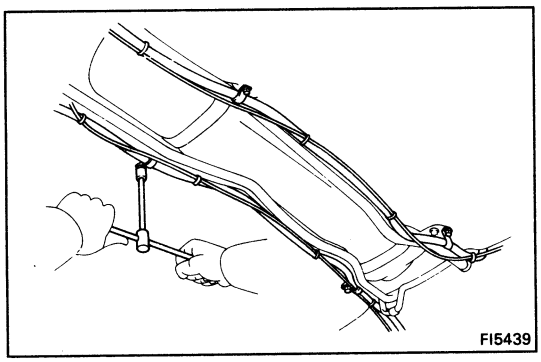

8. **DISCONNECT A/C HOSES FROM BODY**
   Remove the four bolts, and disconnect the two A/C hoses from the body.

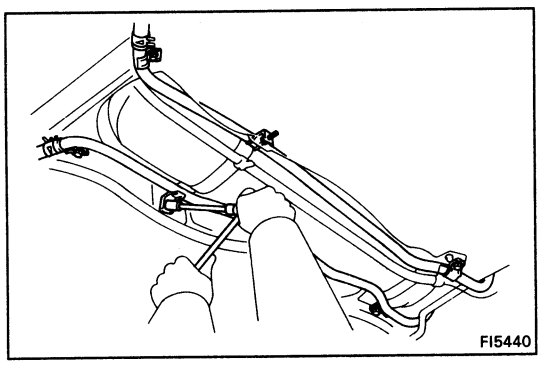

9. **DISCONNECT RADIATOR PIPES FROM BODY**
   Remove the six bolts, and disconnect the two radiator pipes from the body.

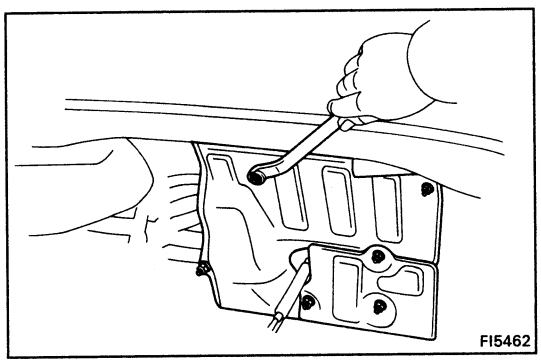

10. **REMOVE FUEL TANK HEAT INSULATORS**
    Remove the six nuts and two heat insulators.

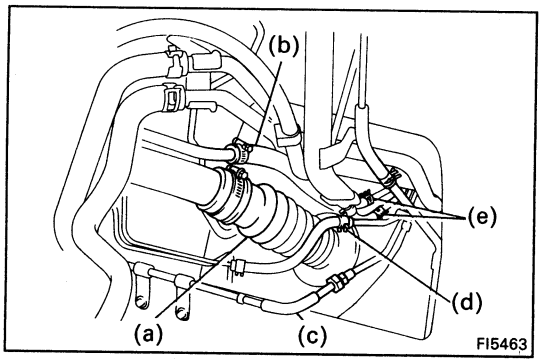

11. DISCONNECT FUEL HOSES AND TUBE

CAUTION: Remove the fuel filter cap to prevent the fuel from flowing out.

(a) Fuel inlet hose
(b) Fuel breather hose
(c) Fuel pump tube
(d) Fuel return hose
(e) Two fuel evaporative bent hoses

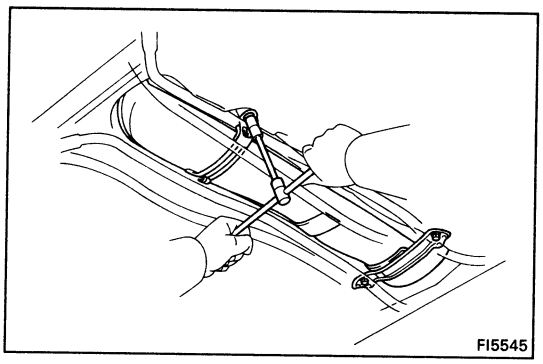

12. REMOVE FUEL TANK

(a) Remove the bolt, pin and tank band.
(b) Remove the two bolts and No.2 center floor cross-member.
(c) Remove the fuel tank.

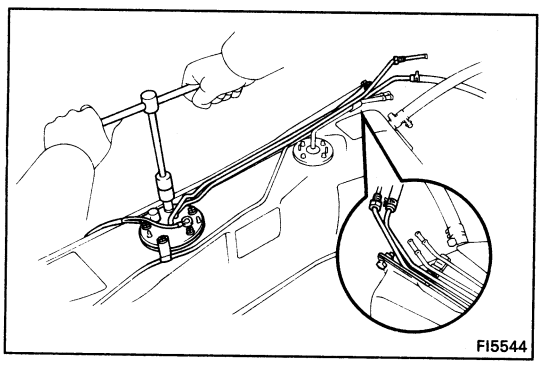

13. REMOVE FUEL PUMP FROM FUEL TANK

(a) Remove the bolt holding the fuel pump tube to the fuel tank.
(b) Remove the five bolts, and pull out the pump.
(c) Remove the gasket from the pump bracket.

COMPONENTS

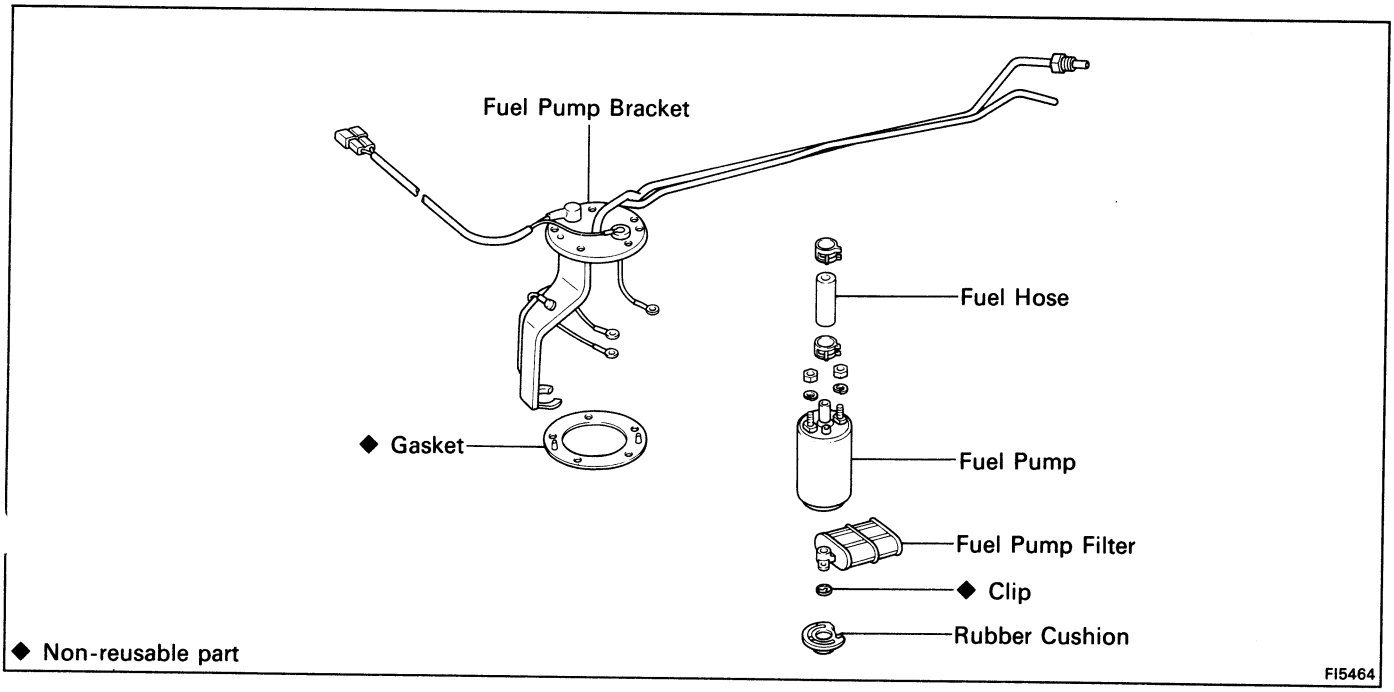

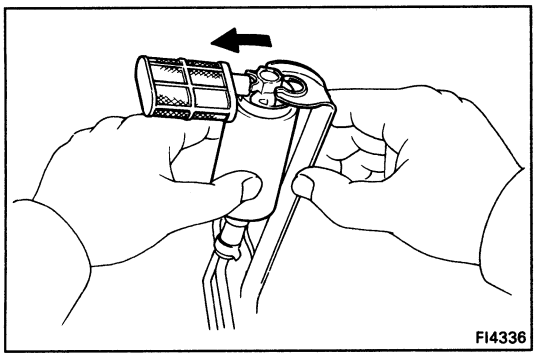

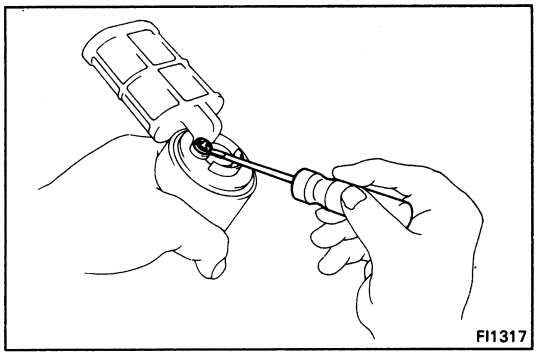

DISASSEMBLY OF FUEL PUMP

(See page FI-95)

1. **REMOVE FUEL PUMP FROM FUEL PUMP BRACKET**
   (a) Pull out the lower side of the fuel pump from the pump bracket.
   (b) Remove the rubber cushion from the fuel pump.
   (c) Remove the nut and spring washers, and disconnect the lead wire from the fuel pump. Disconnect the three lead wires.
   (d) Disconnect the fuel hose from the fuel pump, and remove the fuel pump.
2. **REMOVE FUEL PUMP FILTER FROM FUEL PUMP**
   (a) Using a small screwdriver, remove the clip.
   (b) Pull out the pump filter.

ASSEMBLY OF FUEL PUMP

(See page FI-95)

1. **INSTALL FUEL PUMP FILTER TO FUEL PUMP**
   Install the pump filter with a new clip.
2. **INSTALL FUEL PUMP TO FUEL PUMP BRACKET**
   (a) Connect the fuel hose to the outlet port of the fuel pump.
   (b) Connect the lead wire to the fuel pump with the spring washer and nut. Connect the three lead wires
   (c) Install the rubber cushion to the fuel pump.
   (d) Install the fuel pump by pushing the lower side of the fuel pump.

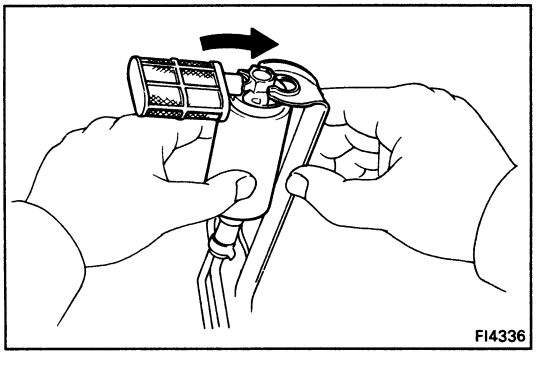

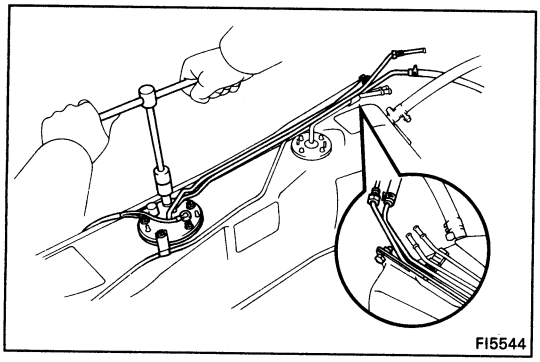

INSTALLATION OF FUEL PUMP

(See pages FI-92 and 93)

1. INSTALL FUEL PUMP TO FUEL TANK

(a) Install a new gasket to the pump bracket.

(b) Insert the fuel pump bracket into the fuel tank.

(c) Install the five bolts holding the fuel pump bracket to the fuel tank.

Torque: 35 kg-cm (35 in.-lb, 3.4 N·m)

(d) Install the bolt holding the fuel pump tube to the fuel tank.

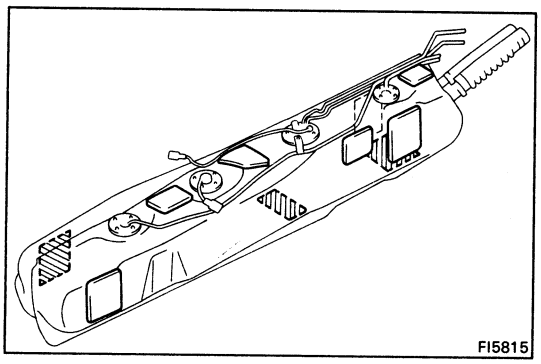

2. INSTALL FUEL TANK

(a) Apply soapy water to the cushions on the fuel tank.

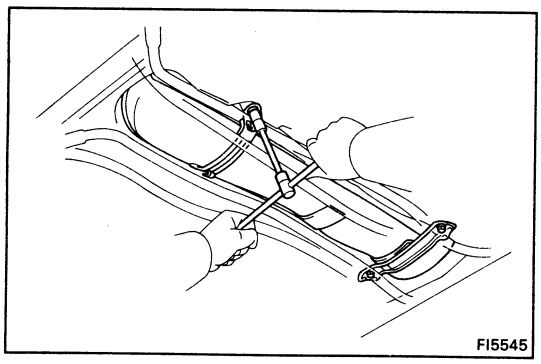

(b) Attach the fuel tank to the body.

(c) Install the fuel tank band with the pin and bolt.

Torque: 300 kg-cm (22 ft-lb, 29 N·m)

(d) Install the No.2 center floor crossmember with the two bolts.

Torque: 300 kg-cm (22 ft-lb, 29 N·m)

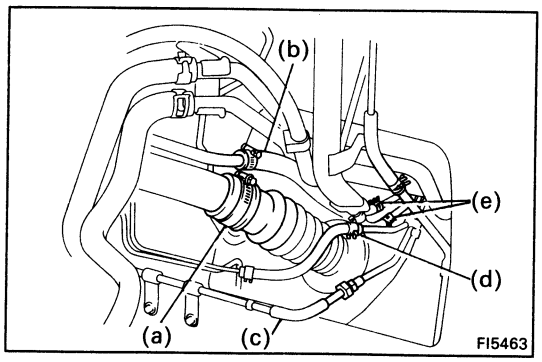

3. CONNECT FUEL HOSES AND TUBE

(a) Fuel inlet hose

(b) Fuel breather hose

(c) Fuel pump tube

(d) Fuel return hose

(e) Two fuel evaporative bent hoses

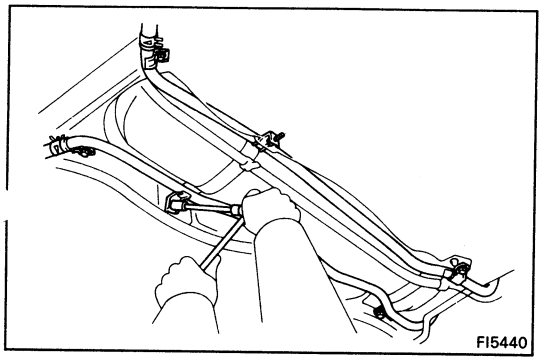

4. INSTALL RADIATOR PIPES TO BODY

Install the two radiator pipes with the six bolts.

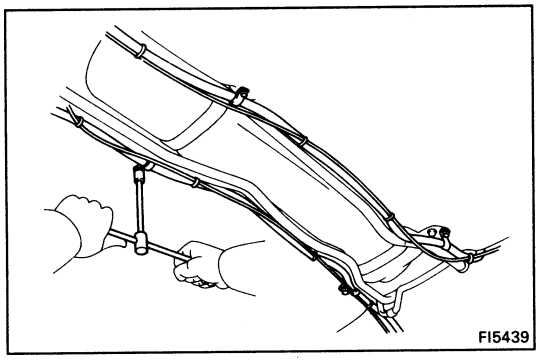

5. INSTALL A/C HOSES TO BODY

Install the two A/C hoses with the four bolts.

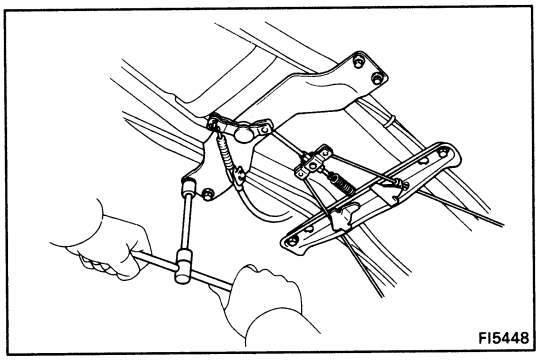

6. INSTALL PARKING BRAKE INTERMEDIATE LEVER AND NO.1 CENTER FLOOR CROSSMEMBER

(a) Connect the parking brake cable to the intermediate lever.

(b) Install the intermediate lever with the four bolts.

(c) Install the crossmember with the two bolts.

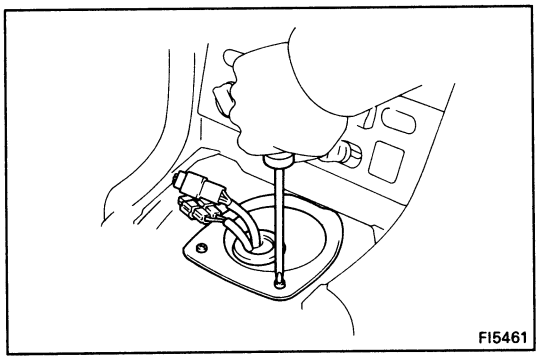

7. CONNECT FUEL PUMP CONNECTOR AND FUEL SENDER GAUGE CONNECTOR

(a) Install the floor service hole cover with the two screws.

(b) Connect the fuel pump connector and fuel sender gauge connector.

(c) Install the following parts:

- Ash receptacle retainer
- Ash receptacle box
- Center instrument finish panel
- LH rear lower instrument finish panel
- Console boxes

8. FILL WITH FUEL

9. CHECK FOR FUEL LEAKAGE (See page FI-9)

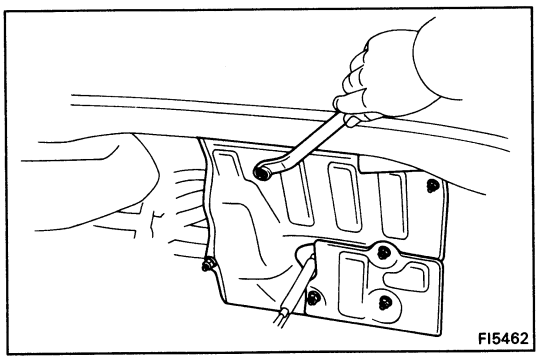

10. INSTALL FUEL TANK HEAT INSULATORS

Remove the six nuts and two heat insulators.

11. INSTALL ENGINE UNDER COVERS

12. INSTALL FUEL TANK PROTECTORS

13. INSTALL FRONT LUGGAGE UNDER COVER

14. CONNECT CABLE TO NEGATIVE TERMINAL OF BATTERY

Cold Start Injector (3S-GTE)

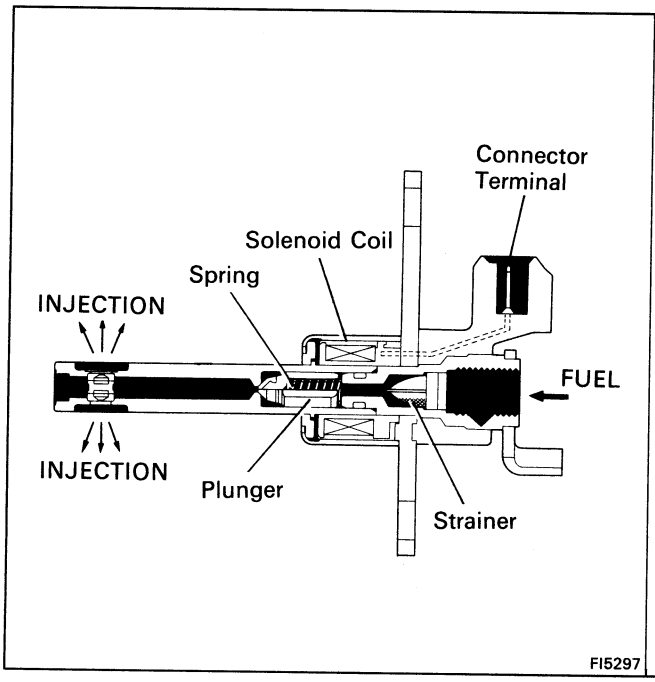

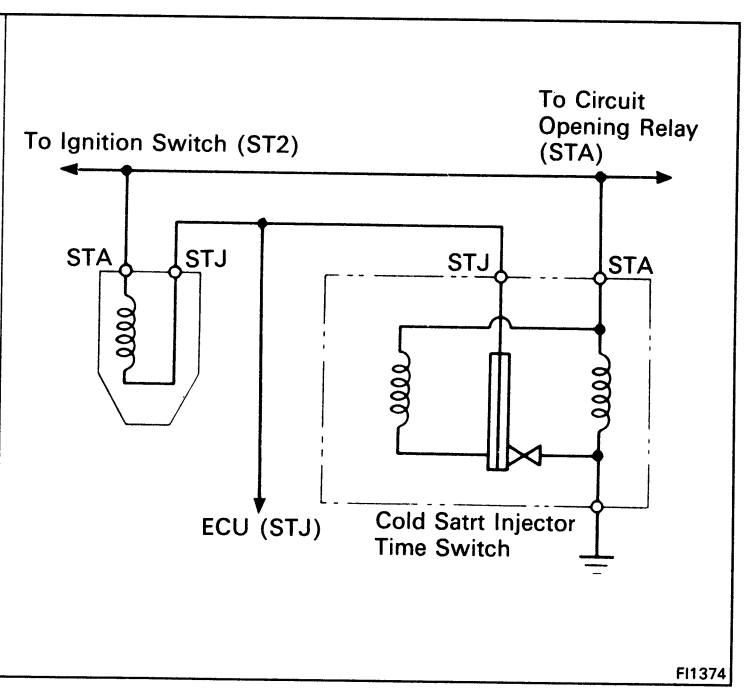

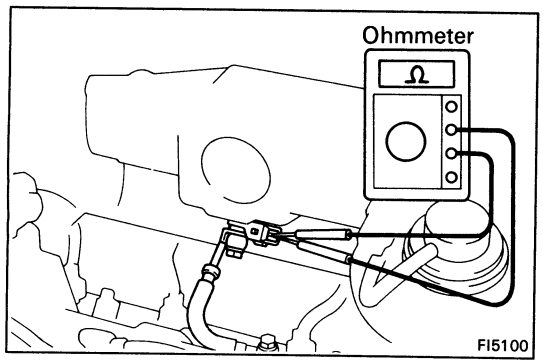

ON-VEHICLE INSPECTION

INSPECT RESISTANCE OF COLD START INJECTOR

(a) Remove the throttle body.
(See steps 1 to 8, 10 and 11 on pages FI-135 and 136)

(b) Disconnect the cold start injector connector.

(c) Using an ohmmeter, measure the resistance between the terminals.

Resistance: 2 – 4 Ω

If the resistance is not as specified, replace the cold start injector.

(d) Reconnect the cold start injector connector.

(e) Reinstall the throttle body.
(See steps 2, 3 and 5 to 12 on page FI-138 and 139)

REMOVAL OF COLD START INJECTOR

1. **REMOVE THROTTLE BODY**
(See steps 1 to 8, 10 and 11 on pages FI-135 and 136)

2. **DISCONNECT COLD START INJECTOR CONNECTOR**

3. **REMOVE COLD START INJECTOR PIPE**

Remove the two union bolts and four gaskets and injector pipe.

HINT:

- Put a suitable container or shop towel under the injector pipe.
- Slowly loosen the union bolt.

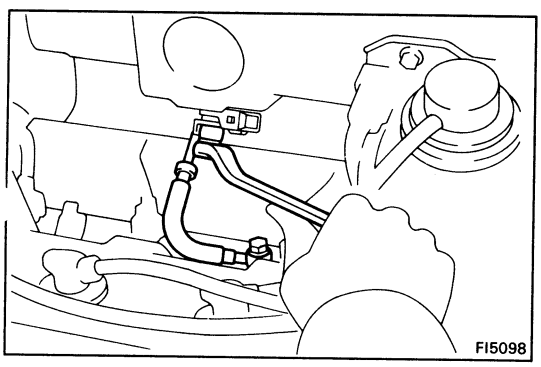

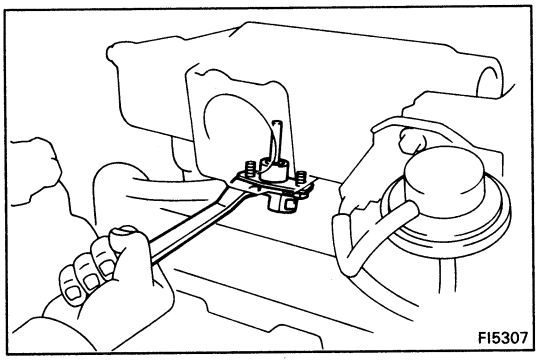

4. REMOVE COLD START INJECTOR

Remove the two bolts, cold start injector and gasket.

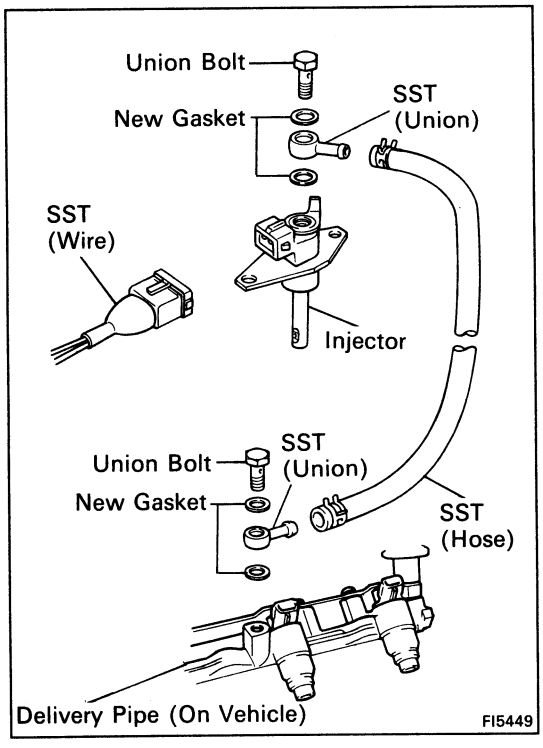

INSPECTION OF COLD START INJECTOR

1. INSPECT INJECTION OF COLD START INJECTOR

CAUTION: Keep injector clear of sparks during the test.

(a) Install SST (two unions) to the injector and delivery pipe with four new gaskets and the union bolts.

SST 09268-41045 (09268-41080)

(b) Connect SST (hose) to the unions.

SST 09268-41045

(c) Connect SST (wire) to the injector.

SST 09842-30050

(d) Put a container under the injector.

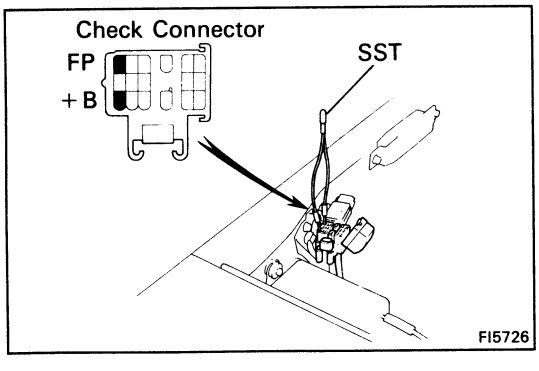

(e) Using SST, connect terminals +B and FP of the check connector.

SST 09843-18020

(f) Reconnect the battery negative (–) cable.

(g) Turn the ignition switch ON.

NOTICE: Do not start the engine.

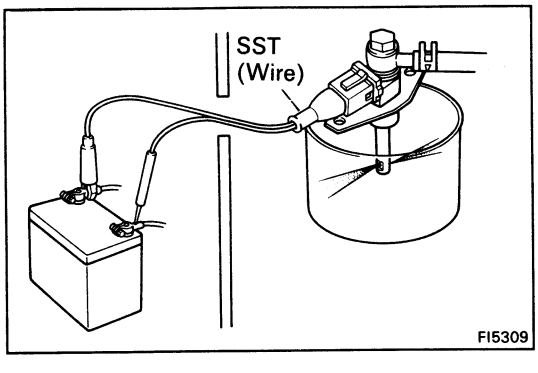

(h) Connect the test probes of the SST (wire) to the battery, and check that the fuel spray is as shown.

SST 09842-30050

NOTICE: Perform this check within the shortest possible time.

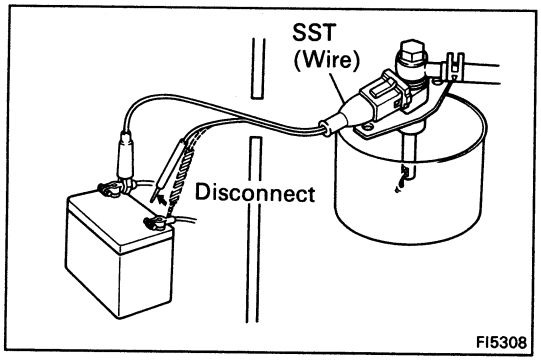

2. INSPECT LEAKAGE

(a) In the condition above, disconnect the test probes of SST (wire) from the battery and check for fuel leakage from the injector.

SST 09842-30050

Fuel drop: One drop or less per minute

(b) Disconnect the battery negative (–) cable.

(c) Remove SST.

SST 09268-41045, 09842-30050 and 09843-18020

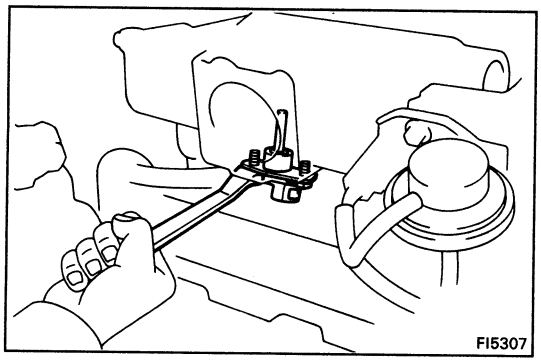

INSTALLATION OF COLD START INJECTOR

1. INSTALL COLD START INJECTOR

Install a new gasket and the injector with the two bolts.

Torque: 60 kg-cm (52 in.-lb, 5.9 N·m)

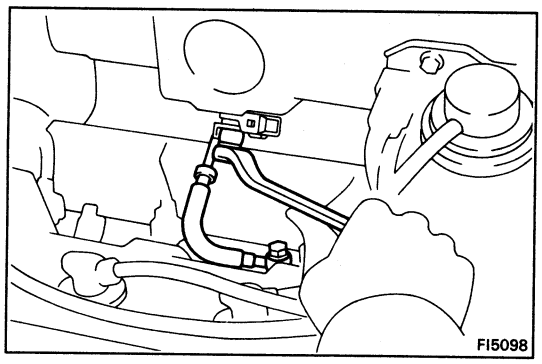

2. INSTALL COLD START INJECTOR PIPE

Install the injector pipe with four new gaskets and the two union bolts.

Torque: 180 kg-cm (13 ft-lb, 18 N·m)

3. CONNECT COLD START INJECTOR CONNECTOR

4. INSTALL THROTTLE BODY

(See steps 2, 3 and 5 to 12 on pages FI-138 and 139)

Cold Start Injector (5S-FE)

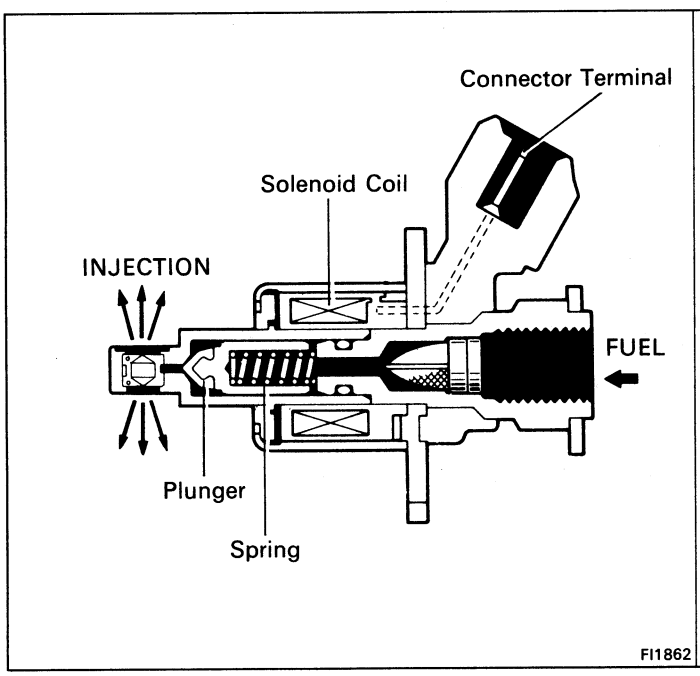

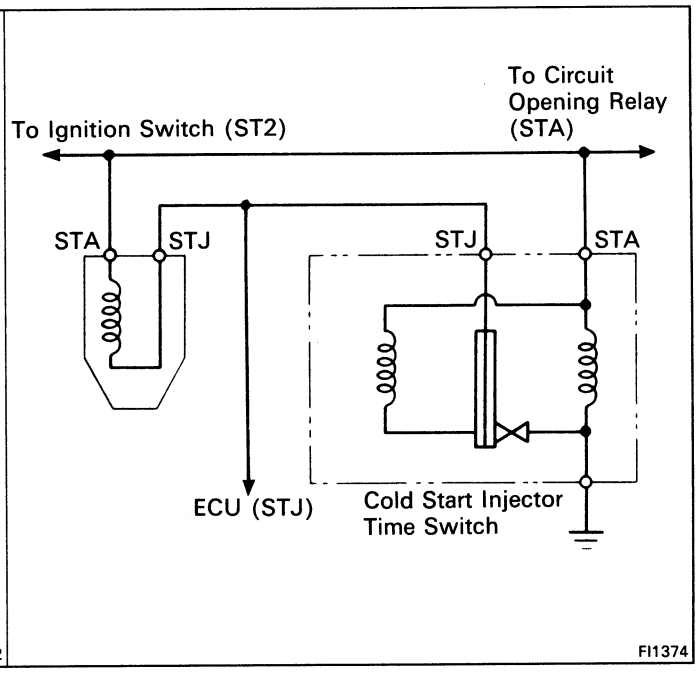

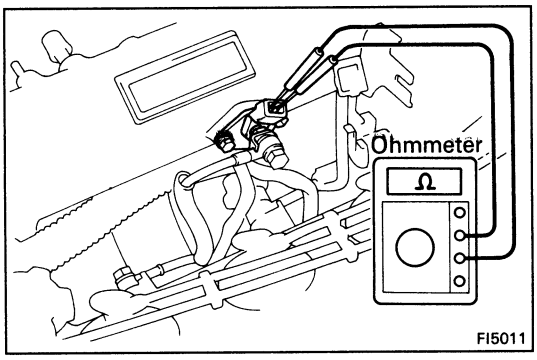

ON-VEHICLE INSPECTION

INSPECT RESISTANCE OF COLD START INJECTOR

(a) Disconnect the cold start injector connector.

(b) Using an ohmmeter, measure the resistance between the terminals.

Resistance: 2 – 4 Ω

If the resistance is not as specified, replace the cold start injector.

(c) Reconnect the cold start injector connector.

REMOVAL OF COLD START INJECTOR

1. DISCONNECT CABLE FROM NEGATIVE TERMINAL OF BATTERY

CAUTION: Work must be started after approx. 20 seconds or longer from the time the ignition switch is turned to the "LOCK" position and the negative (–) terminal cable is disconnected from the battery.

2. DISCONNECT COLD START INJECTOR CONNECTOR

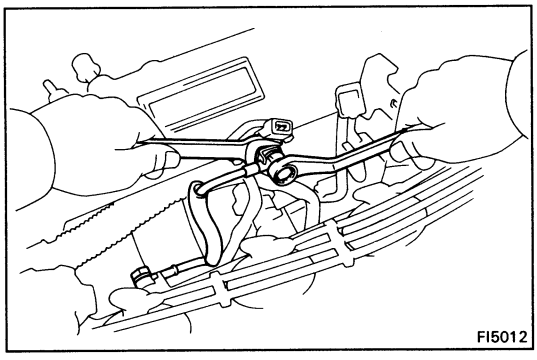

3. REMOVE COLD START INJECTOR PIPE

Remove the two union bolts and four gaskets and injector pipe.

HINT:

- Put a suitable container or shop towel under the injector pipe.
- Slowly loosen the union bolt.

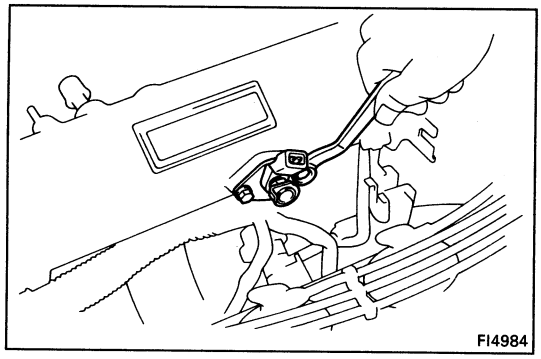

4. REMOVE COLD START INJECTOR

Remove the two bolts, cold start injector and gasket.

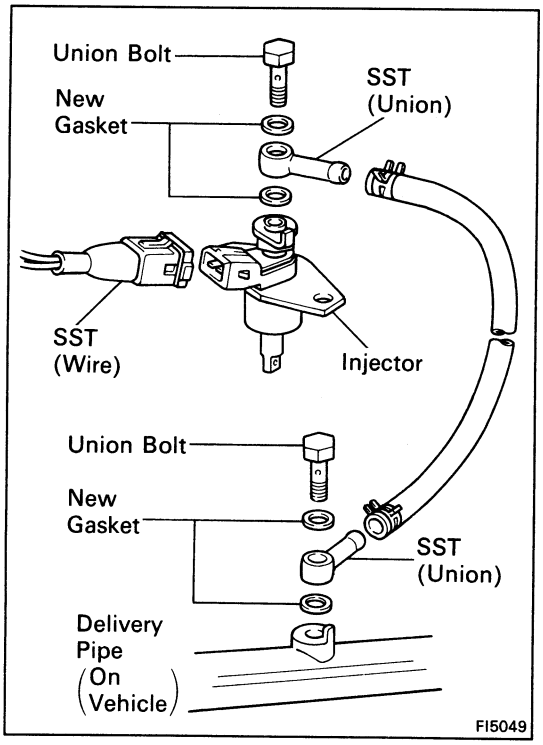

INSPECTION OF COLD START INJECTOR

1. INSPECT INJECTION OF COLD START INJECTOR

CAUTION: Keep clear of sparks during the test.

(a) Install SST (two unions) to the injector and delivery pipe with four new gaskets and the union bolts.

SST 09268-41045 (09268-41080)

(b) Connect SST (hose) to the unions.

SST 09268-41045

(c) Connect SST (wire) to the injector.

SST 09842-30050

(d) Put a container under the injector.

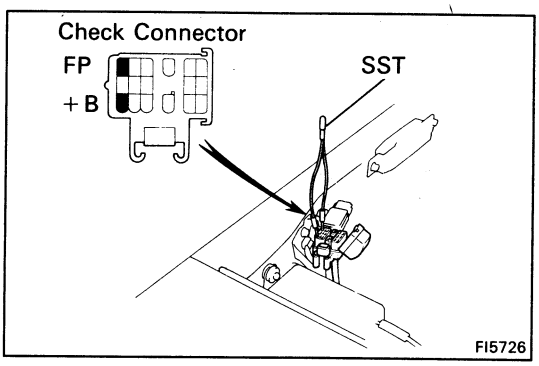

(e) Using SST, connect terminals +B and FP of the check connector.

SST 09843-18020

(f) Reconnect the battery negative (–) cable.

(g) Turn the ignition switch ON.

NOTICE: Do not start the engine.

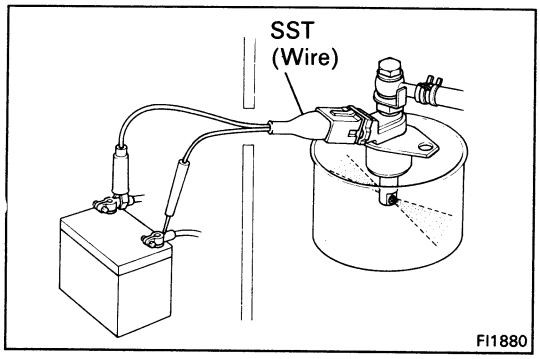

(h) Connect the test probes of the SST (wire) to the battery, and check that the fuel spray is as shown.

SST 09842-30050

NOTICE: Perform this check within the shortest possible time.

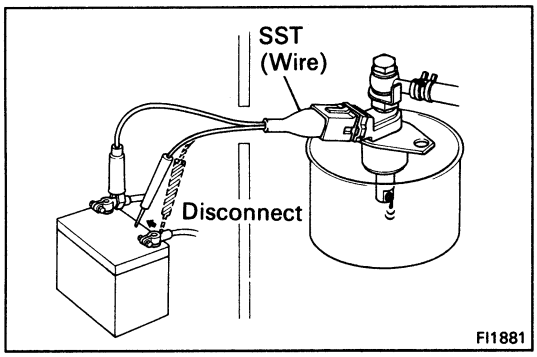

2. INSPECT LEAKAGE

(a) In the condition above, disconnect the test probes of SST (wire) from the battery and check fuel leakage from the injector.

SST 09842-30050

Fuel drop: One drop or less per minute

(b) Disconnect the battery negative (–) cable.

(c) Remove SST.

SST 09268-41045, 09842-30050 and 09843-18020

INSTALLATION OF COLD START INJECTOR

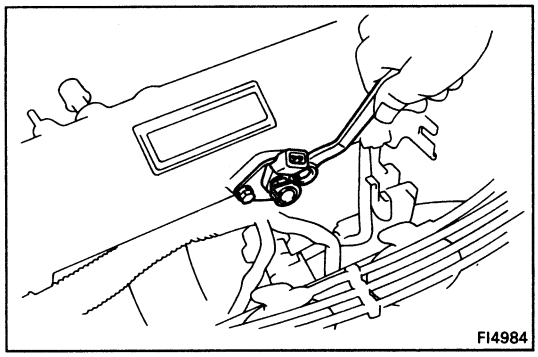

1. INSTALL COLD START INJECTOR

Install a new gasket and the injector with the two bolts.

Torque: 95 kg-cm (82 in.-lb, 9.3 N·m)

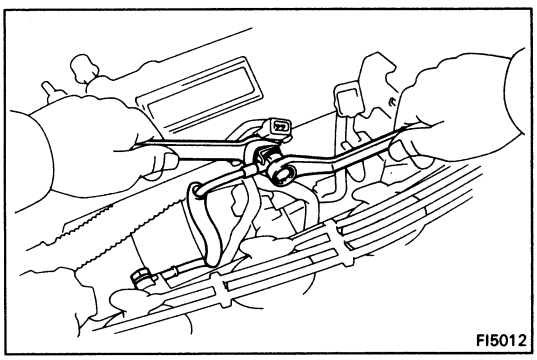

2. INSTALL COLD START INJECTOR PIPE

Install the injector pipe with four new gaskets and the two union bolts.

Torque: 180 kg-cm (13 ft-lb, 18 N·m)

3. CONNECT COLD START INJECTOR CONNECTOR

4. CONNECT CABLE TO NEGATIVE TERMINAL OF BATTERY

5. CHECK FOR FUEL LEAKAGE (See page FI-9)

Fuel Pressure Regulator (3S-GTE)

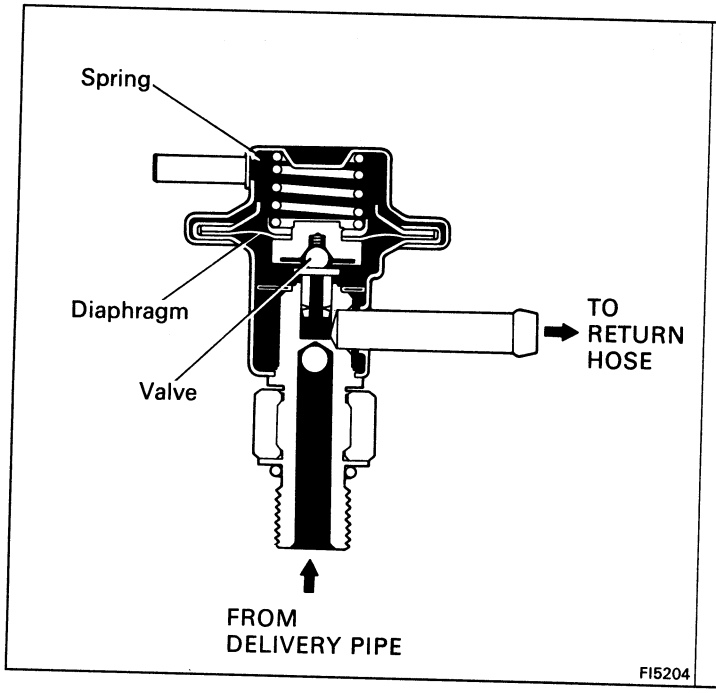

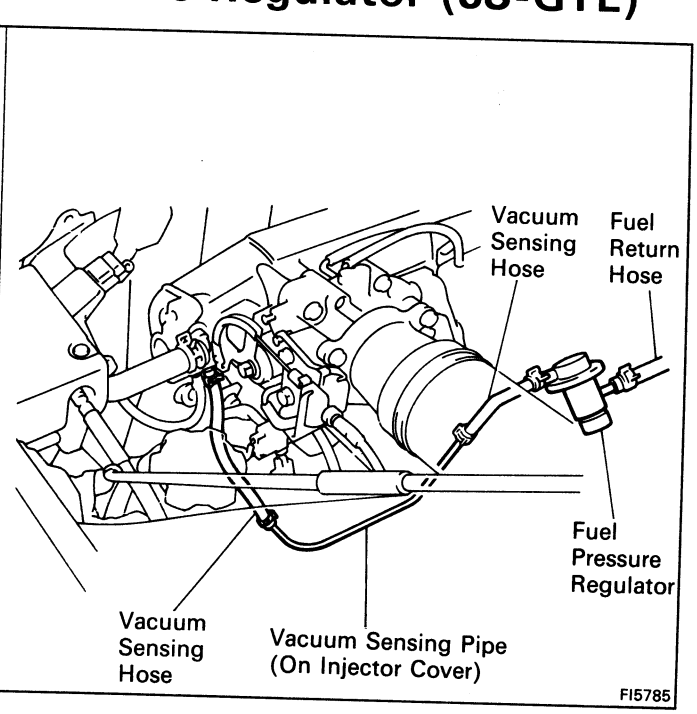

ON-VEHICLE INSPECTION

INSPECT FUEL PRESSURE (See page FI-87)

REMOVAL OF FUEL PRESSURE REGULATOR

1. **REMOVE THROTTLE BODY**
   (See steps 1 to 8, 10 and 11 on pages FI-135 and 136)
2. **REMOVE INJECTORS, FUEL PRESSURE REGULATOR AND DELIVERY PIPE ASSEMBLY**
   (See steps 2 to 15 on pages FI-111 and 112)
3. **REMOVE FUEL INLET HOSE FROM DELIVERY PIPE**
   (See step 16 on page FI-113)
4. **REMOVE INJECTOR COVER FROM DELIVERY PIPE**
   (See step 1 on page FI-115)

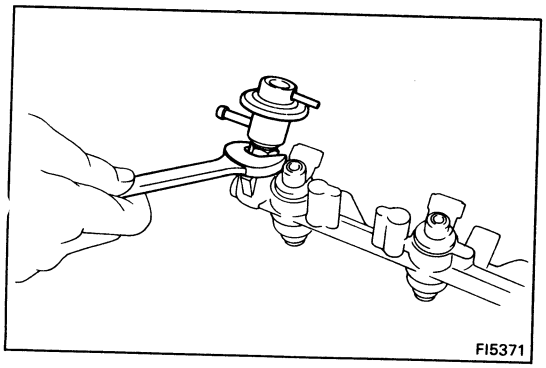

5. **REMOVE FUEL PRESSURE REGULATOR**
   (a) Loosen the lock nut, and remove the pressure regulator.
   (b) Remove the O-ring from the pressure regulator.

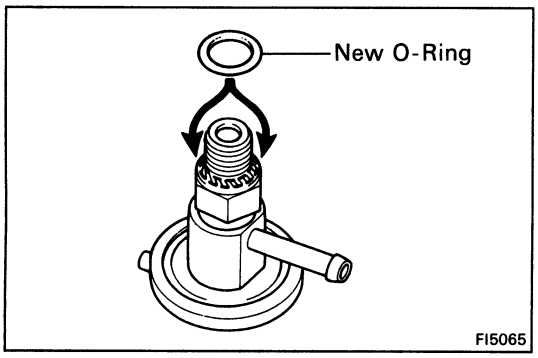

INSTALLATION OF FUEL PRESSURE REGULATOR

1. **INSTALL FUEL PRESSURE REGULATOR**

   (a) Fully loosen the lock nut on the pressure regulator.

   (b) Apply a light coat of gasoline to a new O-ring, and install it to the pressure regulator.

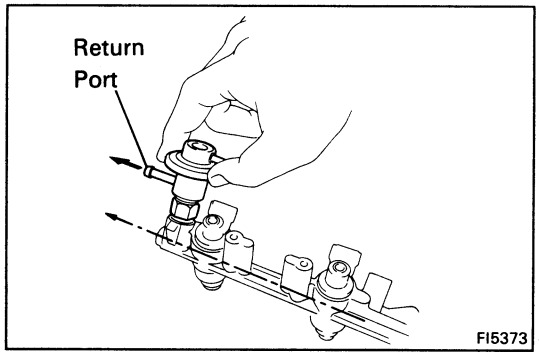

   (c) Completely thrust the pressure regulator into the delivery pipe by hand.

   (d) Turn the pressure regulator counterclockwise until the fuel return port faces in the direction indicated in the figure.

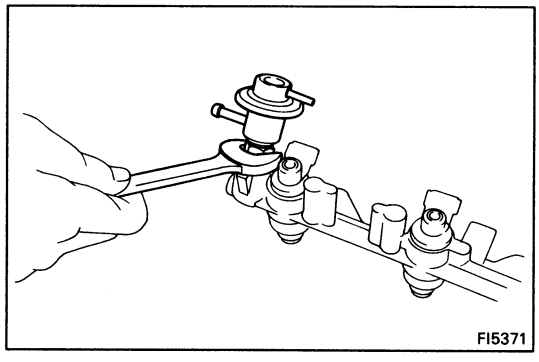

   (e) Tighten the lock nut.

   Torque: 300 kg-cm (22 ft-lb, 29 N·m)

2. **INSTALL INJECTOR COVER TO DELIVERY PIPE**
   (See step 4 on page FI-116)

3. **INSTALL FUEL INLET HOSE TO DELIVERY PIPE**
   (See step 1 on page FI-115)

4. **INSTALL INJECTORS, FUEL PRESSURE REGULATOR AND DELIVERY PIPE ASSEMBLY**
   (See steps 2 to 15 on pages FI-117 to 119)

5. **INSTALL THROTTLE BODY**
   (See steps 2, 3 and 5 to 12 on pages FI-138 and 139)

Fuel Pressure Regulator (5S-FE)

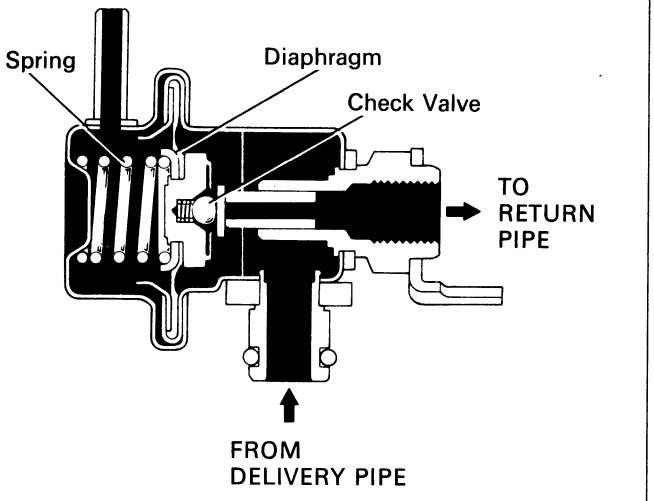

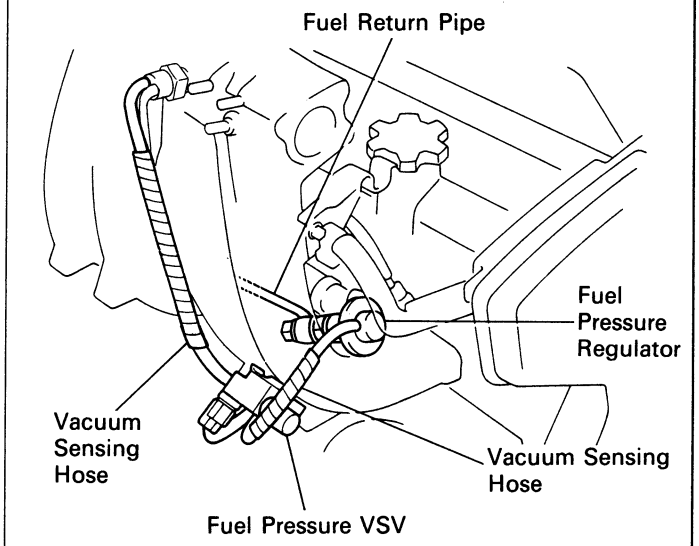

ON-VEHICLE INSPECTION

INSPECT FUEL PRESSURE (See page FI-90)

REMOVAL OF FUEL PRESSURE REGULATOR

1. **DISCONNECT CABLE FROM NEGATIVE TERMINAL OF BATTERY**

   CAUTION: Work must be started after approx. 20 seconds or longer from the time the ignition switch is turned to the "LOCK" position and the negative (–) terminal cable is disconnected from the battery.

2. **REMOVE RH ENGINE HOOD SIDE PANEL**

3. **(w/ CRUISE CONTROL SYSTEM)**
   REMOVE CRUISE CONTROL ACTUATOR
   (See step 11 page EM-182)

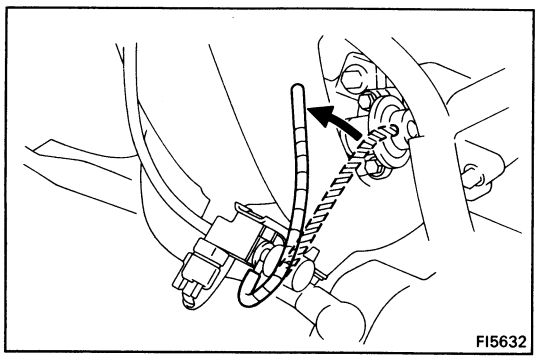

4. **DISCONNECT VACUUM SENSING HOSE FROM FUEL PRESSURE REGULATOR**

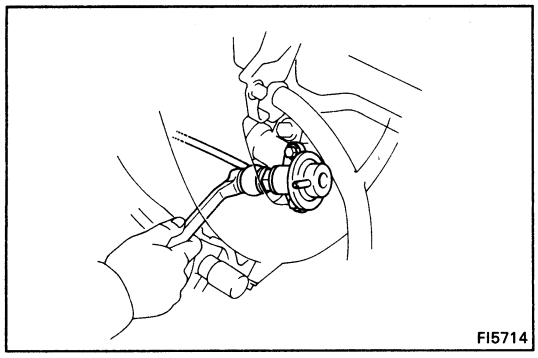

5. DISCONNECT FUEL RETURN PIPE FROM FUEL PRESSURE REGULATOR

Remove the union bolt and two gasket, and disconnect the return pipe from the pressure regulator.

HINT:

- Put a suitable container or shop towel under the pressure regulator.
- Slowly loosen the union bolt.

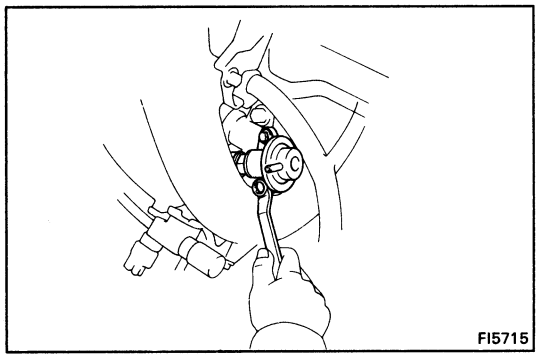

6. REMOVE FUEL PRESSURE REGULATOR

(a) Remove the two bolts, and pull out the pressure regulator.

(b) Remove the O-ring from the pressure regulator.

INSTALLATION OF FUEL PRESSURE REGULATOR

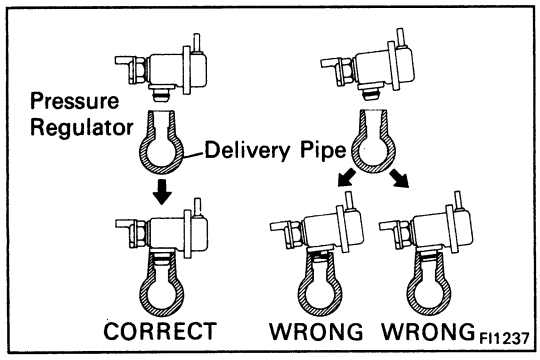

1. INSTALL FUEL PRESSURE REGULATOR

(a) Apply a light coat of gasoline to a new O-ring, and install it to the pressure regulator.

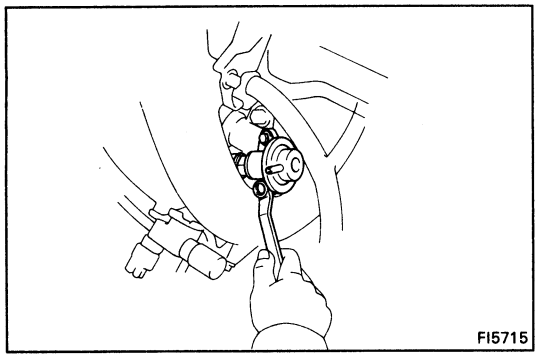

(b) Install the pressure regulator with the two bolts.

Torque: 55 kg-cm (48 in.-lb, 5.4 N·m)

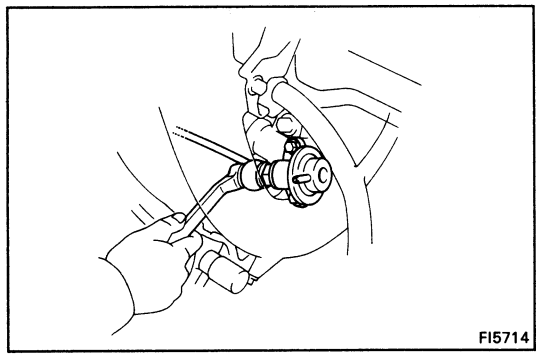

2. CONNECT FUEL RETURN PIPE TO FUEL PRESSURE REGULATOR

Install the return pipe with new two gaskets and the union bolt.

Torque: 180 kg-cm (13 ft-lb, 18 N·m)

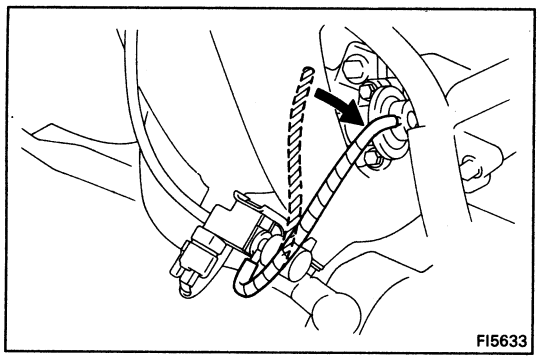

3. CONNECT VACUUM SENSING HOSE TO FUEL PRESSURE REGULATOR

4. (w/ CRUISE CONTROL SYSTEM) INSTALL CRUISE CONTROL ACTUATOR (See step 33 page EM-225)

5. INSTALL RH ENGINE HOOD SIDE PANEL

6. CONNECT CABLE TO NEGATIVE TERMINAL OF BATTERY

7. CHECK FOR FUEL LEAKAGE (See page FI-9)

Injectors (3S-GTE)

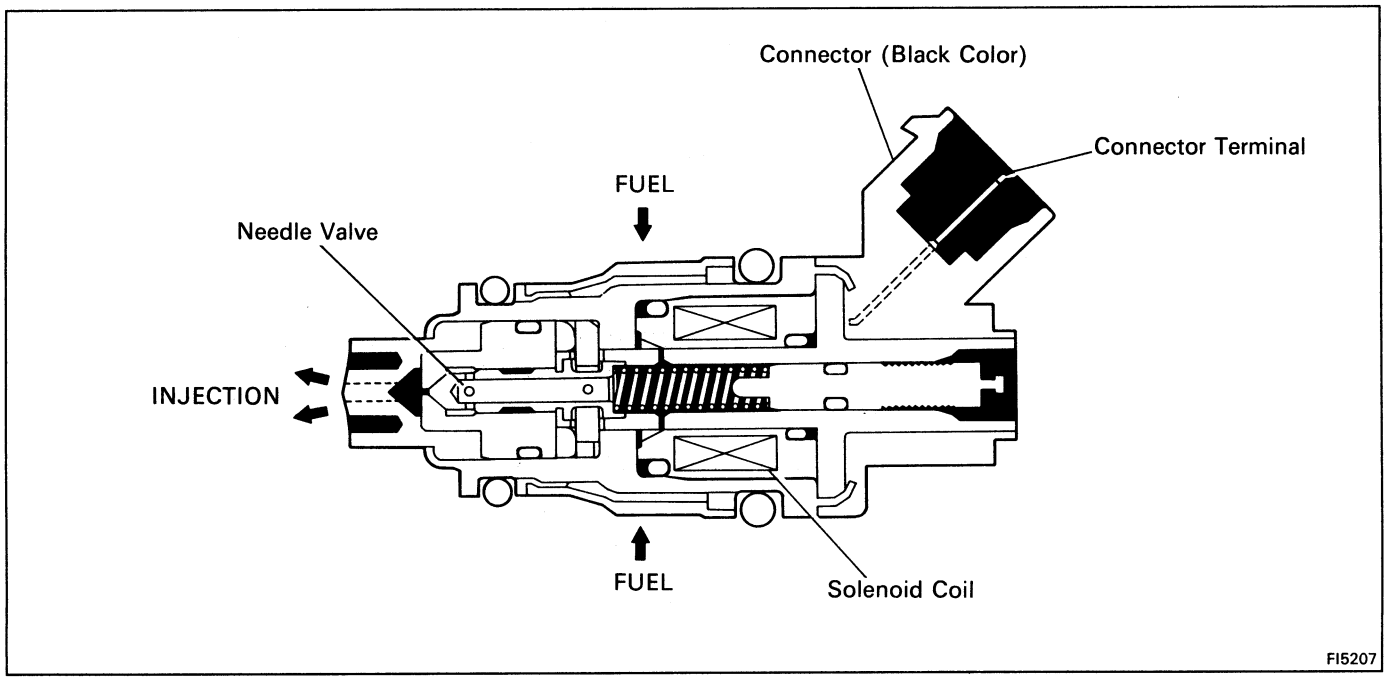

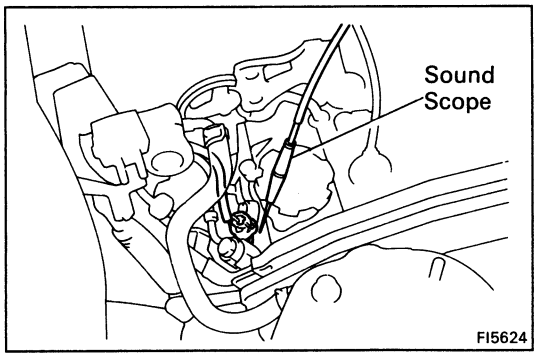

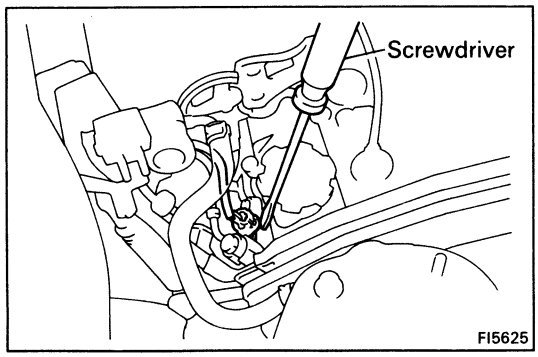

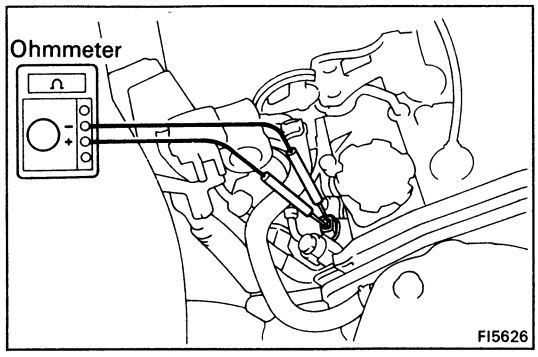

ON-VEHICLE INSPECTION

1. INSPECT INJECTOR OPERATION

Check operation sound from each injector.

(a) With the engine running or cranking, use a sound scope to check that there is normal operating noise in proportion to engine rpm.

(b) If you have no sound scope, you can check the injector transmission operation with a screwdriver.

If no sound or an unusual sound is heard, check the wiring connector, injector or injection signal from the ECU.

2. INSPECT INJECTOR RESISTANCE

(a) Remove the throttle body.
(See steps 1 to 8, 10 and 11 on pages FI-135 and 136)

(b) Disconnect the injector connector.

(c) Using an ohmmeter, measure the resistance between the terminals.

Resistance: 2 – 4 Ω

If the resistance is not as specified, replace the injector.

(d) Reconnect the injector connector.

(e) Reinstall the throttle body.
(See steps 2, 3 and 5 to 12 on pages FI-138 and 139)

REMOVAL OF INJECTORS

1. **REMOVE THROTTLE BODY**
   (See steps 1 to 8, 10 and 11 on pages FI-135 and 136)
2. **REMOVE LH ENGINE HOOD SIDE PANEL**
3. **REMOVE AIR CLEANER**
   (See step 9 on page EM-134)
4. **REMOVE CHARCOAL CANISTER**
   (See steps 19 on page EM-136)
5. **REMOVE EGR VSV AND VACUUM MODULATOR**
   (See step 22 on page EM-66)
6. **REMOVE EGR VALVE AND PIPE**
   (See step 24 on page EM-66)
7. **REMOVE COLD START INJECTOR PIPE**
   (See step 3 on page FI-99)
8. **REMOVE COLD START INJECTOR**
   (See steps 2 and 4 on page FI-100)

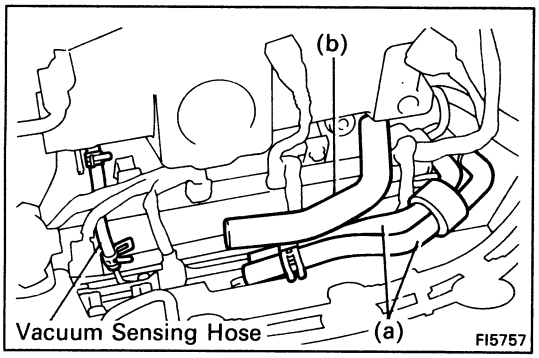

9. **REMOVE WATER BY-PASS HOSES AND AIR HOSE**
   (a) Two ISC water by-pass hoses from No.1 air tube
   (b) ISC air hose from No.1 air tube
10. **DISCONNECT VACUUM SENSING HOSE FROM VACUUM SENSING PIPE ON INJECTOR COVER**
11. **DISCONNECT INJECTOR CONNECTORS**

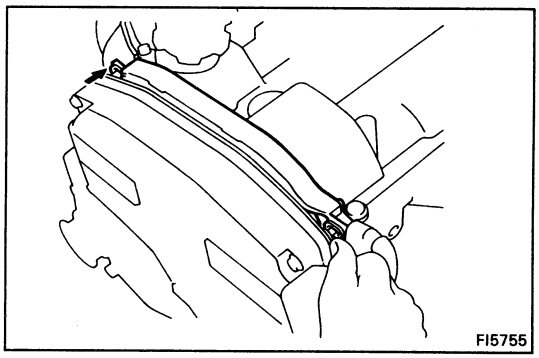

12. **DISCONNECT ENGINE WIRE**
    (a) Disconnect the two wire clamps from the mount bolts of the No.2 timing belt cover.

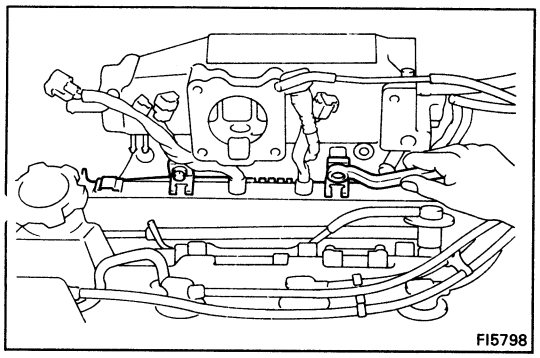

    (b) Disconnect the two wire clamps from the wire brackets on the intake manifold.

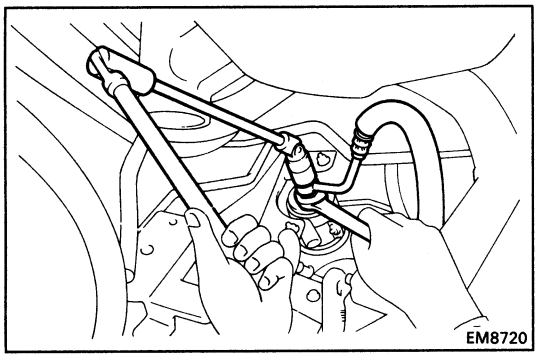

13. DISCONNECT FUEL INLET HOSE FROM FUEL FILTER

Remove the union bolt and two gaskets, and disconnect the inlet hose.

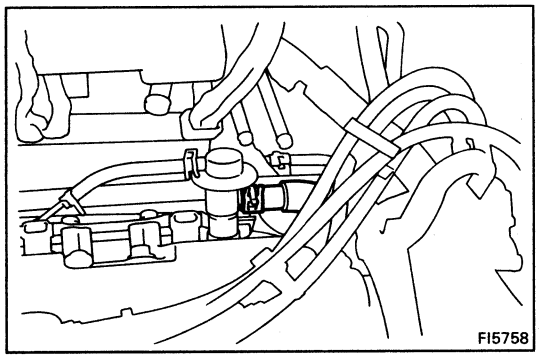

14. DISCONNECT FUEL RETURN HOSE FROM FUEL PRESSURE REGULATOR

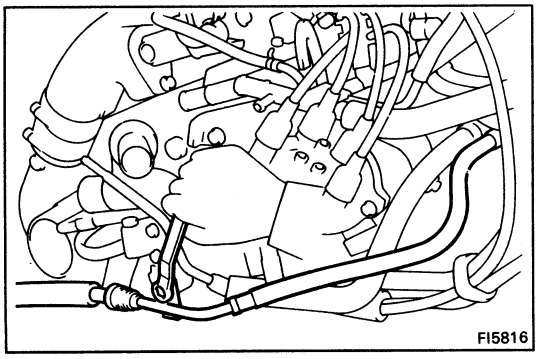

15. REMOVE INJECTOR, FUEL PRESSURE REGULATOR AND DELIVERY PIPE ASSEMBLY

(a) Remove the bolt holding the fuel inlet hose to the water outlet.

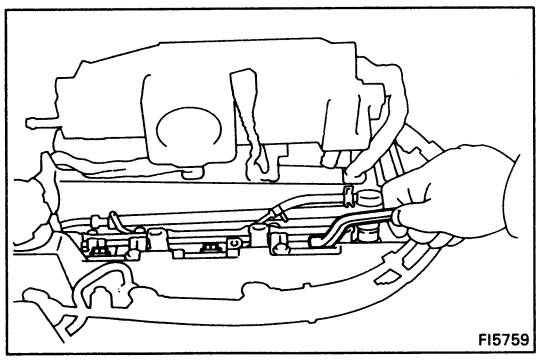

(b) Remove the three bolts holding the delivery pipe to the cylinder head.

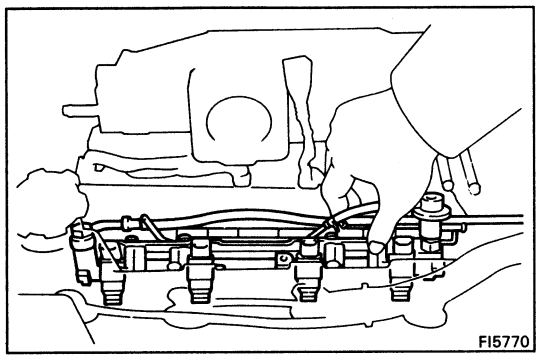

(c) Remove the delivery pipe assembly.

(d) Remove the four insulators and three spacers.

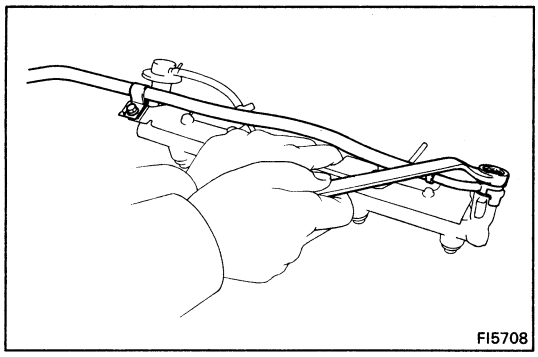

16. REMOVE FUEL INLET HOSE FROM DELIVERY PIPE

Remove the bolt, union bolt, two gaskets and inlet hose.

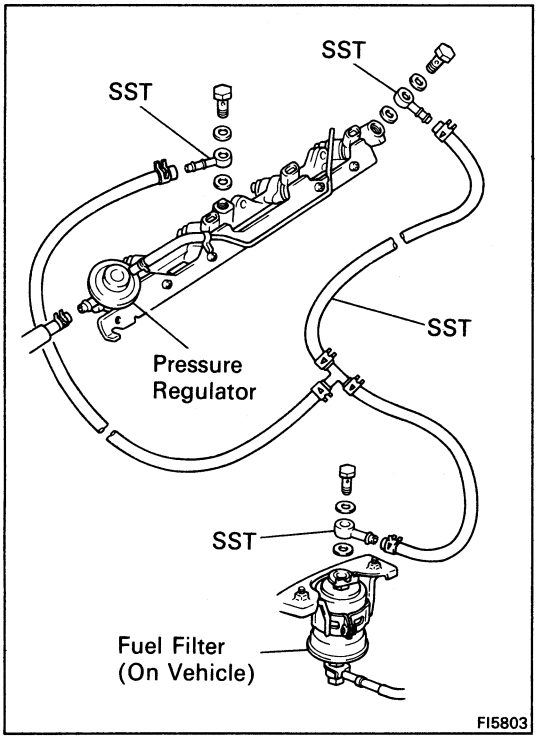

INSPECTION OF INJECTORS

1. INSPECT INJECTOR INJECTION

CAUTION: Keep injector clear of sparks during the test.

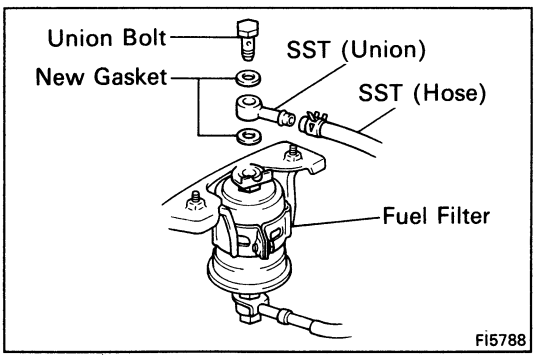

(a) Connect SST (union and hose) to the fuel filter outlet with two new gaskets and the union bolt.

SST 09268-41045 (90405-09015)

HINT: Use the vehicle's fuel filter.

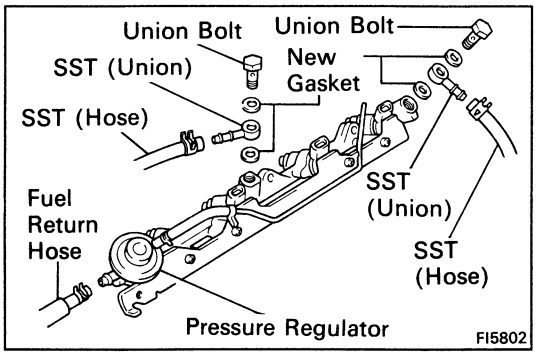

(b) Connect the fuel return hose to the fuel outlet of the pressure regulator on the delivery pipe.

(c) Connect SST (union and hose) to the delivery pipe with four new gaskets and the two union bolts.

SST 09268-41045 (09268-41080, 90405-09015)

(d) Put the injector into the graduated cylinder.

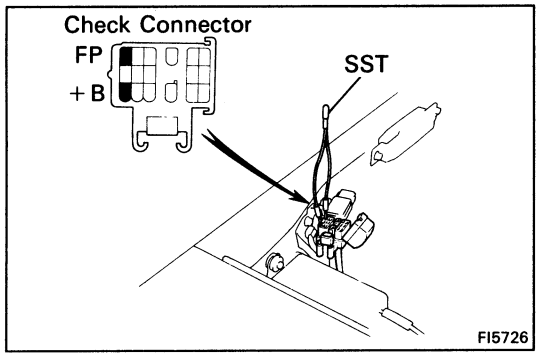

(e) Using SST, connect terminals +B and FP of the check connector.

SST 09843-18020

(f) Reconnect the battery negative (–) cable.

(g) Turn the ignition switch ON.

NOTICE: Do not start the engine.

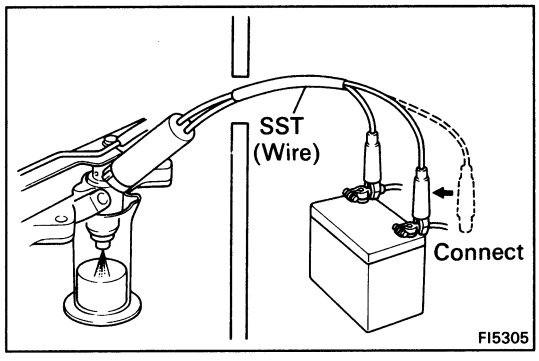

(h) Connect SST (wire) to the injector and battery for 15 seconds, and measure the injection volume with a graduated cylinder. Test each injector two or three times.

SST 09842-30060

Volume: 95 – 120 cc (5.8 – 7.3 cu in.) per 15 sec.

Difference between each injector:
5 cc (0.3 cu in.) or less

If the injection volume is not as specified, replace the injector.

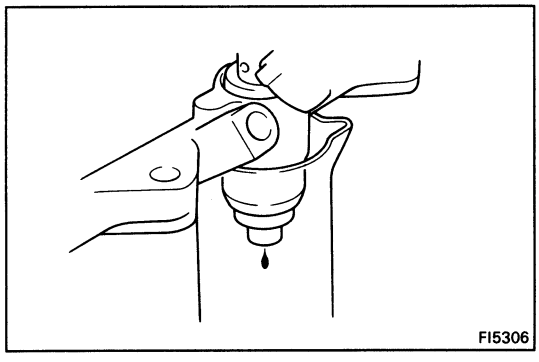

2. INSPECT LEAKAGE

(a) In the condition above, disconnect the test probes of SST (wire) from the battery and check for fuel leakage from the injector.

SST 09842-30060

Fuel drop: One drop or less per minute

(b) Disconnect the battery negative (–) cable.

(c) Remove SST.

SST 09268-41045 and 09843-18020

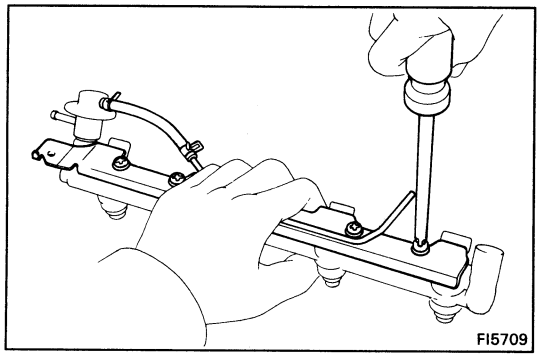

REPLACEMENT OF INJECTORS

1. REMOVE INJECTOR COVER

(a) Disconnect the vacuum sensing hose from the pressure regulator.

(b) Remove the four screws and injector cover.

(c) Remove the four insulators from the injectors.

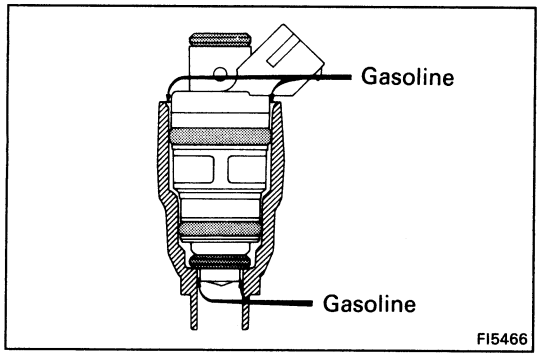

2. REMOVE INJECTORS

(a) Apply gasoline between the delivery pipe and injectors.

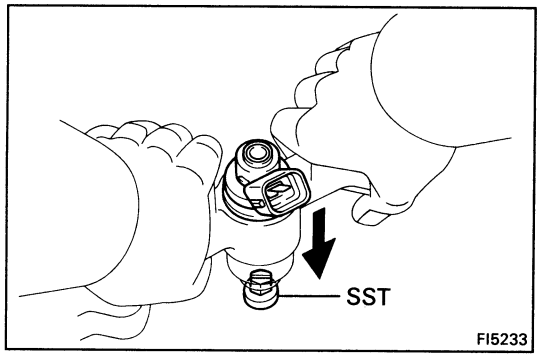

(b) Using SST, lift up the injector.

SST 09268-74010

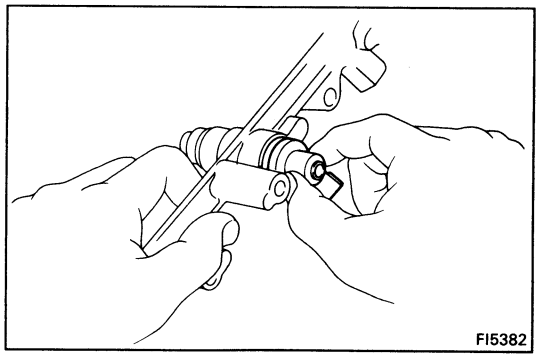

(c) Pull out the four injectors from the delivery pipe.

(d) Remove the insulator and two O-rings from each injector.

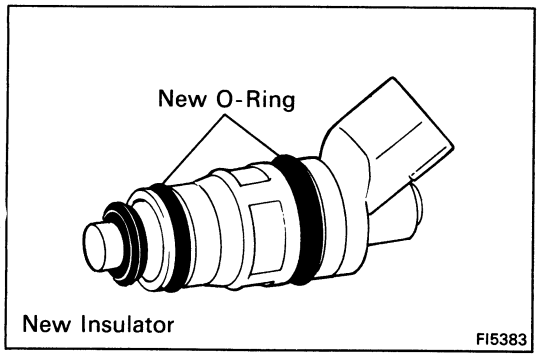

3. INSTALL INJECTORS

(a) Apply a light coat of gasoline to two new O-rings, and install them to the injector.

(b) Install new insulator and two O-rings to each injector.

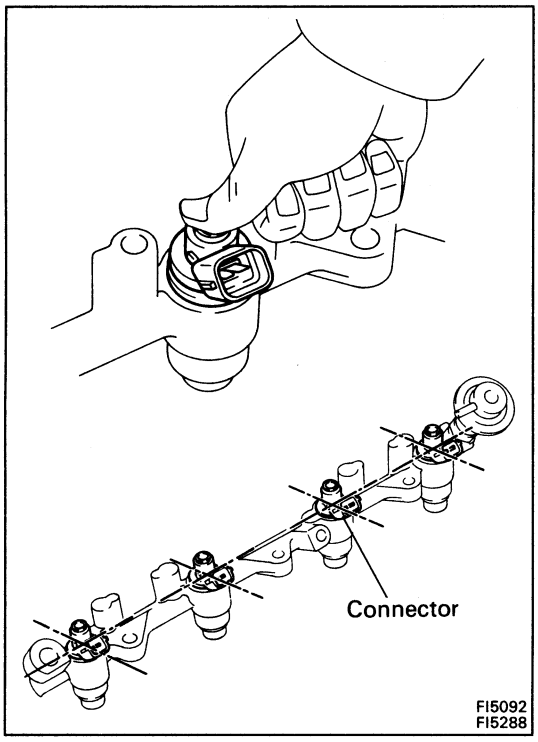

(c) Push in the four injectors so that the injector connectors are positioned as shown in the figure.

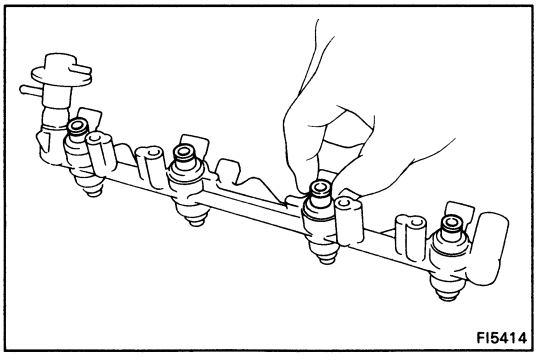

4. INSTALL INJECTOR COVER

(a) Place a new insulator on each injector.

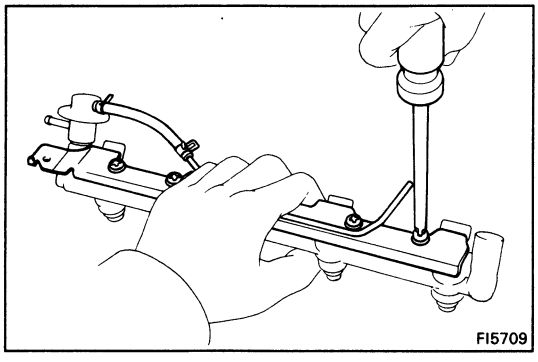

(b) Install the injector cover with the four screws.

Torque: 80 kg-cm (69 in.-lb, 7.8 N·m)

(c) Connect the vacuum sensing hose to the pressure regulator.

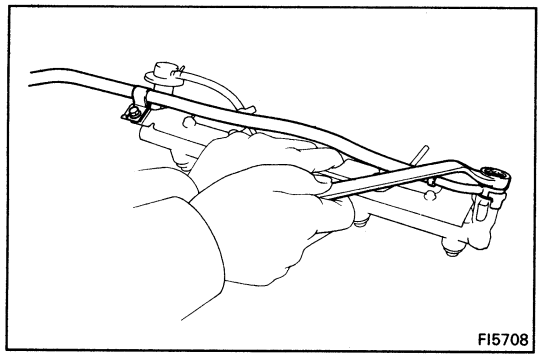

INSTALLATION OF INJECTORS

1. INSTALL FUEL INLET HOSE TO DELIVERY PIPE

Install the inlet hose with the bolt, two new gaskets and union bolt.

Torque:

Bolt	**80 kg-cm (69 in.-lb, 7.8 N·m)**
Union bolt	**300 kg-cm (22 ft-lb, 29 N·m)**

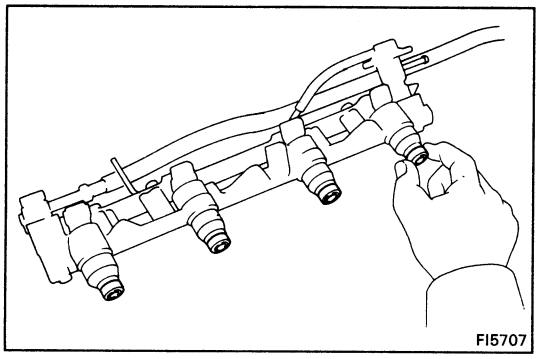

2. INSTALL INJECTORS, FUEL PRESSURE REGULATOR AND DELIVERY PIPE ASSEMBLY

(a) Install a new insulator to each injector.

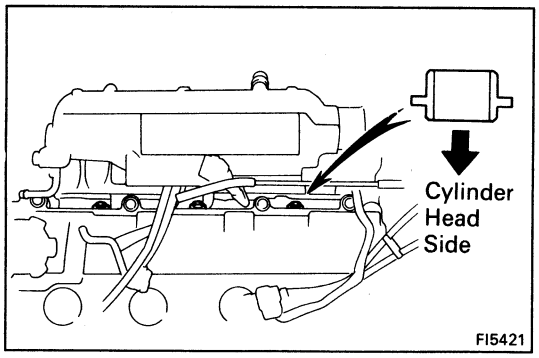

(b) Place the three spacers in position on the cylinder head.

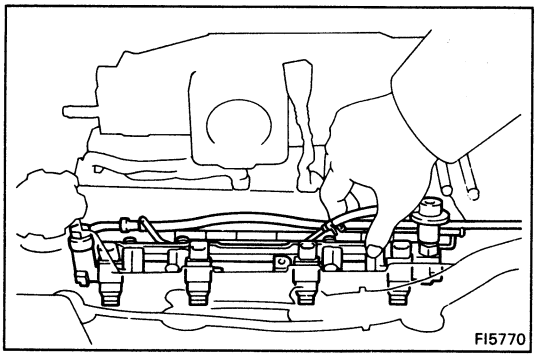

(c) Place the delivery pipe in position on the cylinder head.

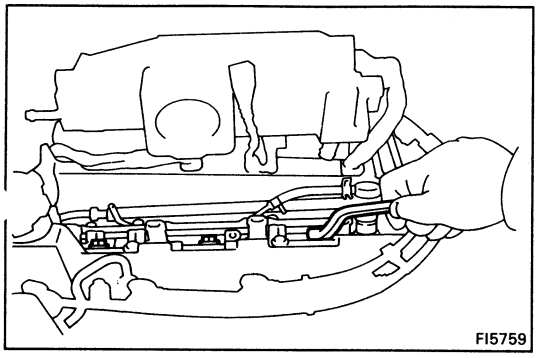

(d) Install the three bolts holding the delivery pipe to the cylinder head.

Torque: 195 kg-cm (14 ft-lb, 19 N·m)

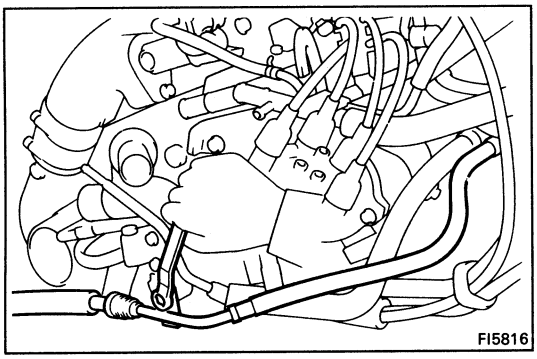

(e) Install the bolt holding the fuel inlet hose to the water outlet.

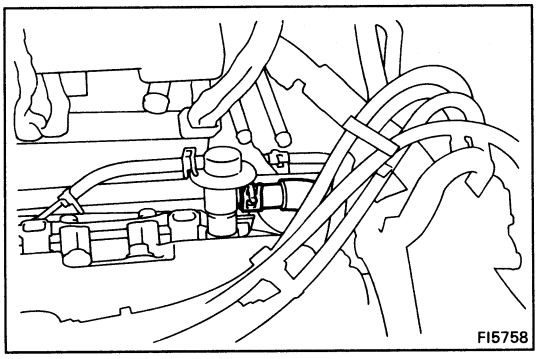

3. CONNECT FUEL RETURN HOSE TO FUEL PRESSURE REGULATOR

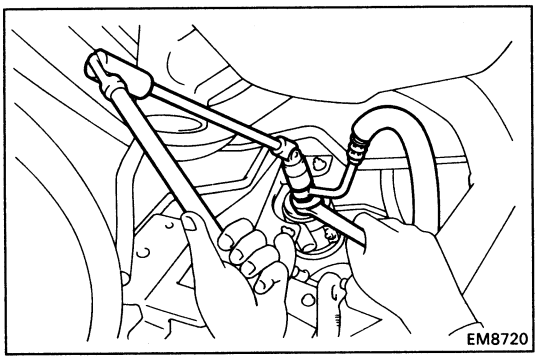

4. CONNECT FUEL INLET HOSE TO FUEL FILTER

Install the inlet hose with two new gaskets and the union bolt.

Torque: 300 kg-cm (22 ft-lb, 29 N·m)

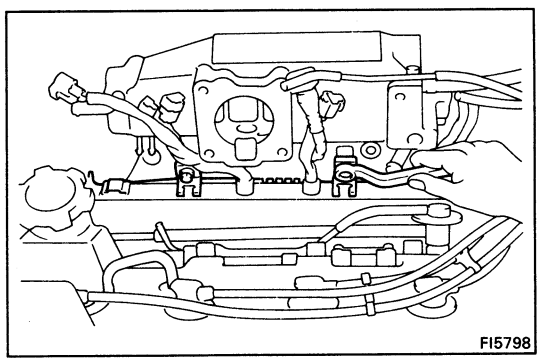

5. INSTALL ENGINE WIRE

(a) Install the two wire clamps to the intake manifold, with the two bolts.

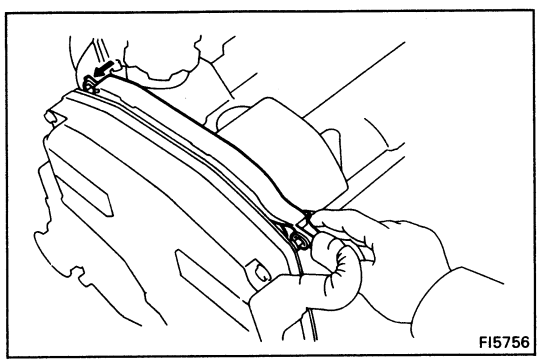

(b) Install the two wire clamps to the mount bolts of the No.2 timing belt cover.

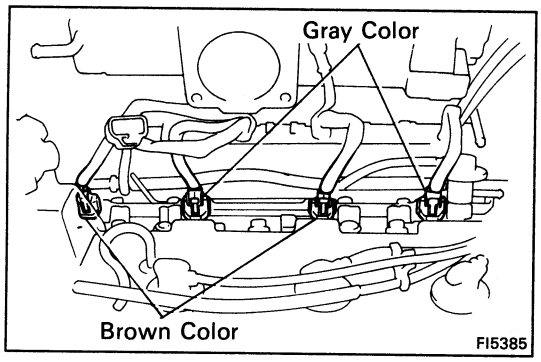

6. **CONNECT INJECTOR CONNECTORS**

Connect the injector connectors as shown in the figure.

HINT: No.1 and No.3 injector connectors are brown. No.2 and No.4 injector connectors are gray.

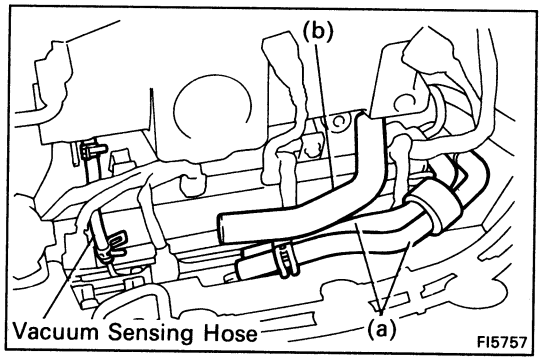

7. **INSTALL WATER BY-PASS HOSES AND AIR HOSE**
   (a) Two ISC water by-pass hoses from No.1 air tube
   (b) ISC air hose from No.1 air tube

8. **CONNECT VACUUM SENSING HOSE TO VACUUM SENSING PIPE ON INJECTOR COVER**

9. **INSTALL COLD START INJECTOR**
   (See steps 1 and 3 on page FI-101)

10. **INSTALL COLD START INJECTOR PIPE**
    (See step 2 on page FI-101)

11. **INSTALL EGR VALVE AND PIPE**
    (See step 18 on page EM-92)

12. **INSTALL EGR VSV AND VACUUM MODULATOR**
    (See step 20 on page EM-92)

13. **INSTALL CHARCOAL CANISTER**
    (See step 30 on page EM-177)

14. **INSTALL AIR CLEANER**
    (See step 40 on page EM-179)

15. **INSTALL LH ENGINE HOOD SIDE PANEL**

16. **INSTALL THROTTLE BODY**
    (See steps 2, 3 and 5 to 12 on pages FI-138 and 139)

Injectors (5S-FE)

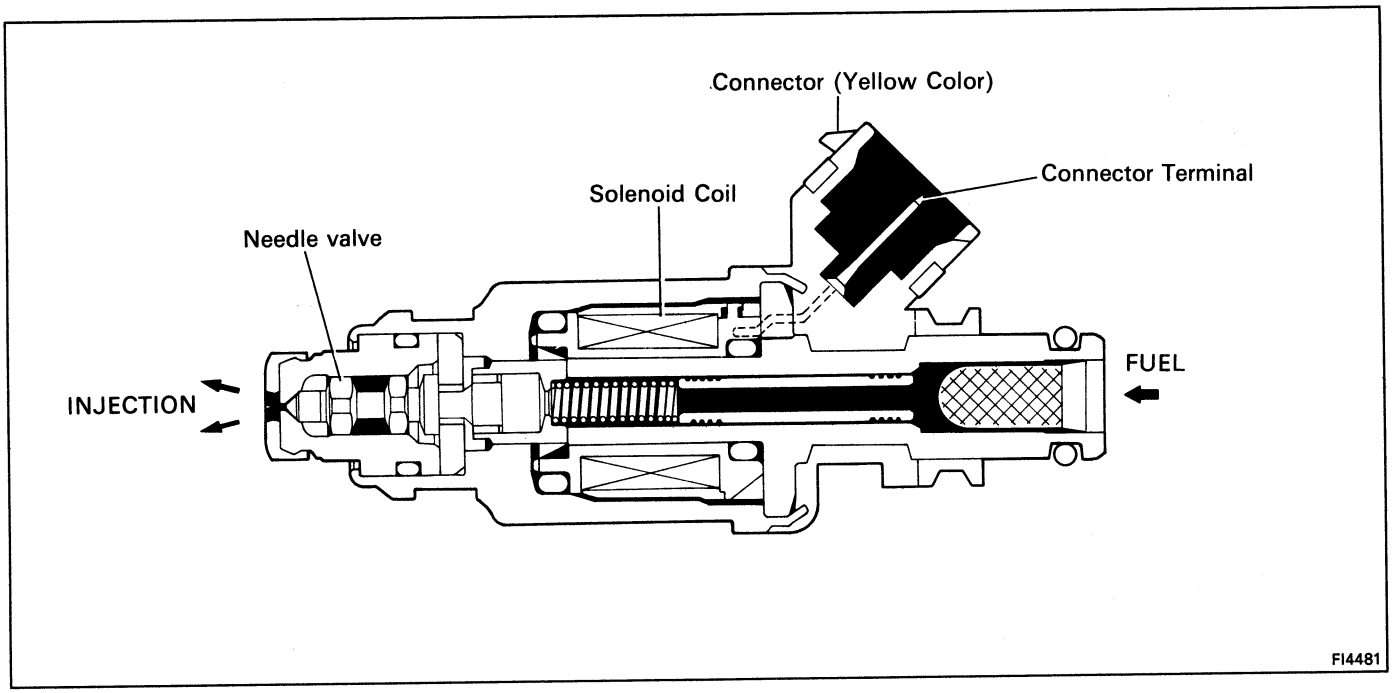

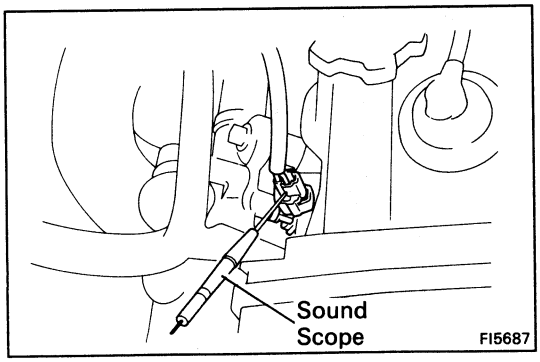

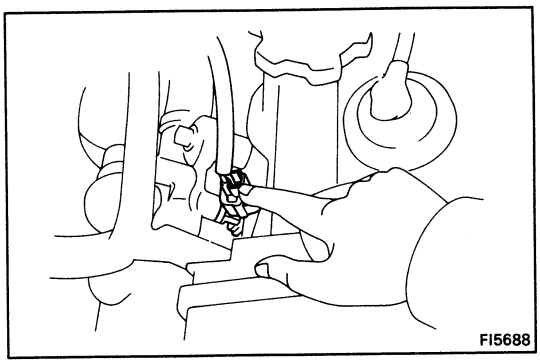

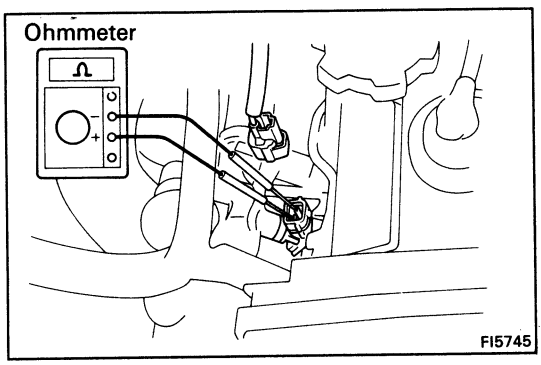

ON-VEHICLE INSPECTION

1. INSPECT INJECTOR OPERATION

Check operation sound from each injector.

(a) With the engine running or cranking, use a sound scope to check that there is normal operating noise in proportion to engine rpm.

(b) If you have no sound scope, you can check the injector transmission operation with your finger.

If no sound or an unusual sound is heard, check the wiring connector, injector or injection signal from the ECU.

2. INSPECT INJECTOR RESISTANCE

(a) Disconnect the injector connector.

(b) Using an ohmmeter, measure the resistance between the terminals.

Resistance: Approx. 13.8 Ω

If the resistance is not as specified, replace the injector.

(c) Reconnect the injector connector.

REMOVAL OF INJECTORS

1. **DISCONNECT CABLE FROM NEGATIVE TERMINAL OF BATTERY**

   CAUTION: Work must be started after approx. 20 seconds or longer from the time the ignition switch is turned to the "LOCK" position and the negative (–) terminal cable is disconnected from the battery.

2. **REMOVE ENGINE HOOD SIDE PANELS**

3. **REMOVE AIR CLEANER**
   (See step 9 on page EM-182)

4. **(w/ CRUISE CONTROL SYSTEM)**
   REMOVE CRUISE CONTROL ACTUATOR
   (See step 11 on page EM-182)

5. **REMOVE COLD START INJECTOR PIPE**
   (See step 3 on page FI-102)

6. **DISCONNECT BRAKE BOOTER VACUUM HOSE FROM INTAKE MANIFOLD**

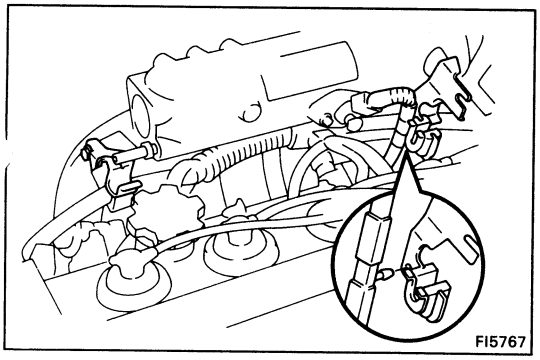

7. **REMOVE ACCELERATOR BRACKETS**
   (a) Remove the bolt and RH accelerator bracket.
   (b) Disconnect the clip of the engine wire from the LH accelerator bracket. Remove the two bolts and LH accelerator bracket.

8. **DISCONNECT INJECTOR CONNECTORS**

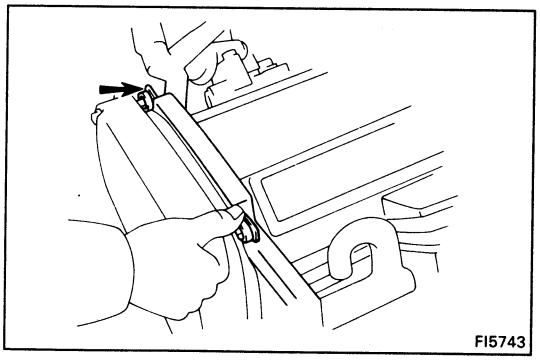

9. **DISCONNECT ENGINE WIRE**
   (a) Disconnect the two wire clamps from the mount bolts of the No.2 timing belt cover.

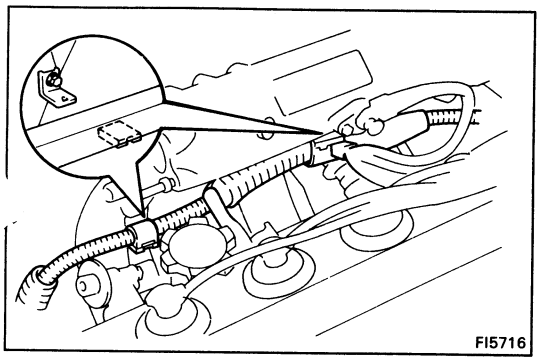

   (b) Disconnect the two wire clamps from the wire brackets on the intake manifold.

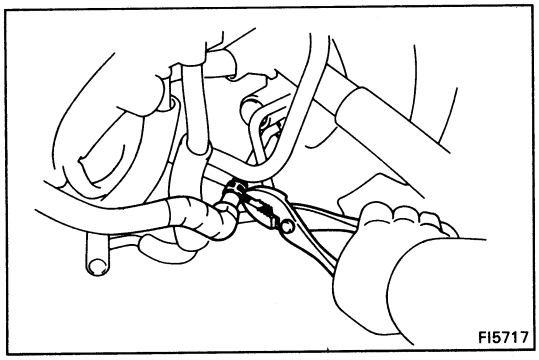

10. DISCONNECT FUEL HOSE FROM RETURN PIPE

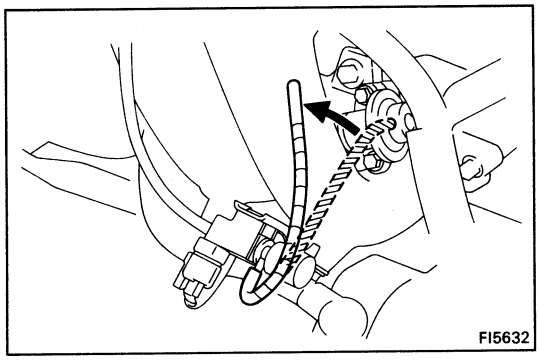

11. DISCONNECT VACUUM SENSING HOSE FROM FUEL PRESSURE REGULATOR

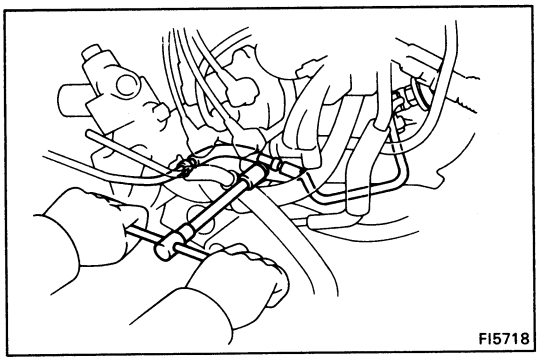

12. REMOVE DELIVERY PIPE AND INJECTORS

(a) Remove the bolt holding the fuel inlet hose to the cylinder head.

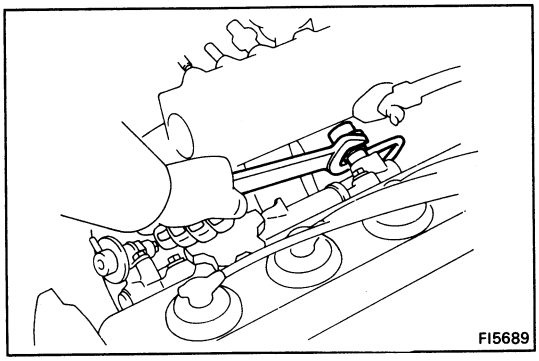

(b) Loosen the pulsation damper.

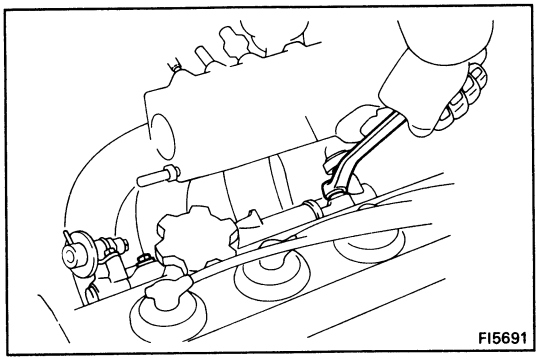

(c) Loosen the two bolts holding the delivery pipe to the cylinder head.

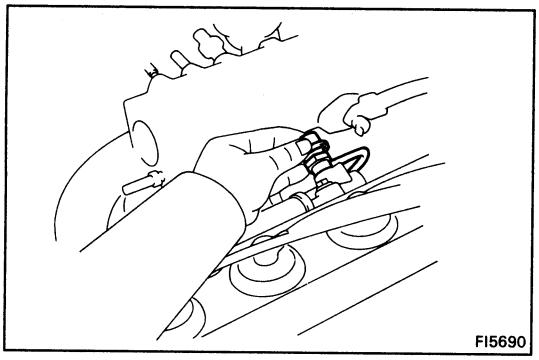

(d) Remove the pulsation damper, and disconnect the fuel inlet hose from the delivery pipe.

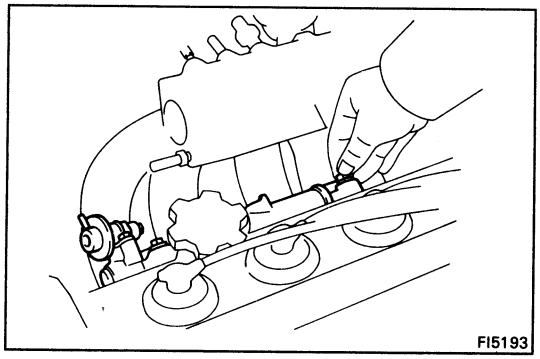

(e) Remove the two bolts and delivery pipe together with four injectors.

NOTICE: Be careful not to drop the injectors, when removing the delivery pipe.

(f) Remove the four insulators and two spacers from the cylinder head.

(g) Pull out the four injectors from the delivery pipe.

(h) Remove the O-ring and grommet from each injector.

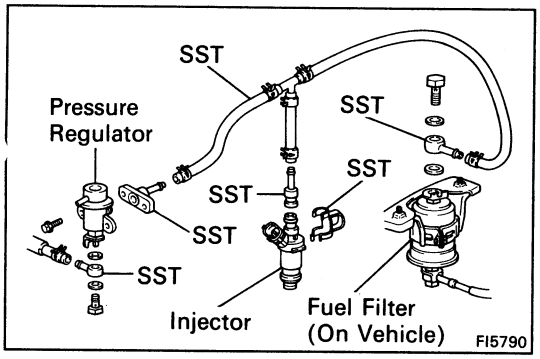

INSPECTION OF INJECTORS

1. INSPECT INJECTOR INJECTION

CAUTION: Keep injector clear of sparks during the test.

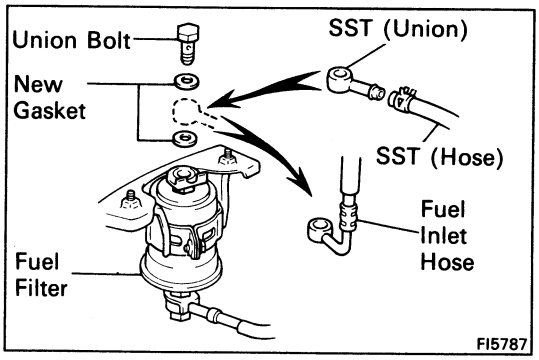

(a) Disconnect the fuel inlet hose from the fuel filter outlet.

(b) Connect SST (union and hose) to the fuel filter outlet with two new gaskets and the union bolt.

SST 09268-41045 (90405-09015)

HINT: Use the vehicle's fuel filter.

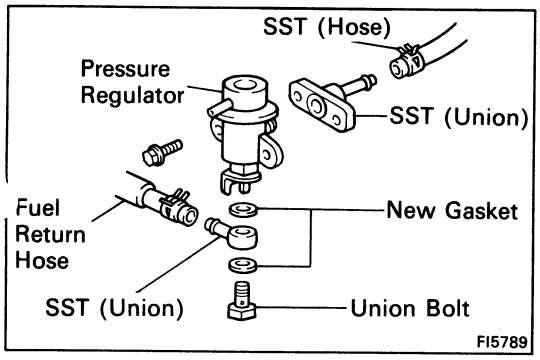

(c) Remove the pressure regulator from the delivery pipe.

(d) Install a new O-ring to the fuel inlet of pressure regulator.

(e) Connect SST (hose) to the fuel inlet of the pressure regulator with SST (union) and the two bolts.

SST 09268-41045 (09268-41090)

(f) Connect the fuel return hose to the fuel outlet of the pressure regulator with SST (union), two new gaskets and union bolt.

SST 09268-41045 (09268-41080)

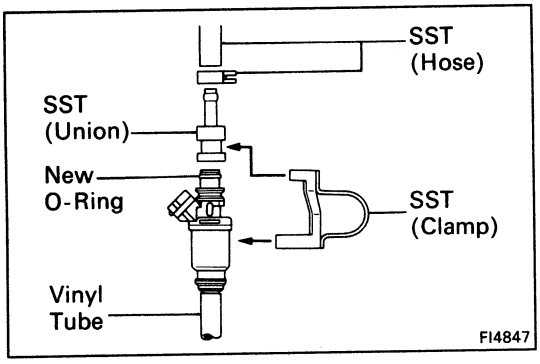

(g) Install the grommet and a new O-ring to the injector.

(h) Connect SST (union and hose) to the injector, and hold the injector and union with SST (clamp).

SST 09268-41045

(i) Put the injector into the graduated cylinder.

HINT: Install a suitable vinyl hose onto the injector to prevent gasoline from splashing out.

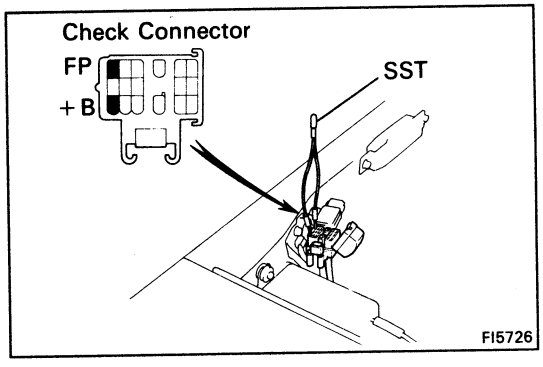

(j) Using SST, connect terminals +B and FP of the check connector.

SST 09843-18020

(k) Reconnect the battery negative (–) cable.

(l) Turn the ignition switch ON.

NOTICE: Do not start the engine.

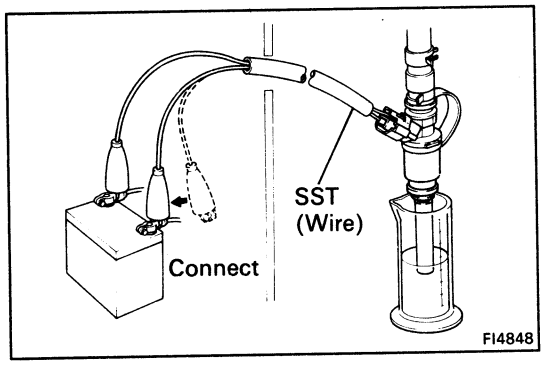

(m) Connect SST (wire) to the injector and battery for 15 seconds, and measure the injection volume with a graduated cylinder. Test each injector two or three times.

SST 09842-30070

Volume: 45 – 55 cc (2.7 – 3.4 cu in.) per 15 sec.

Difference between each injector:
5 cc (0.3 cu in.) or less

If the injection volume is not as specified, replace the injector.

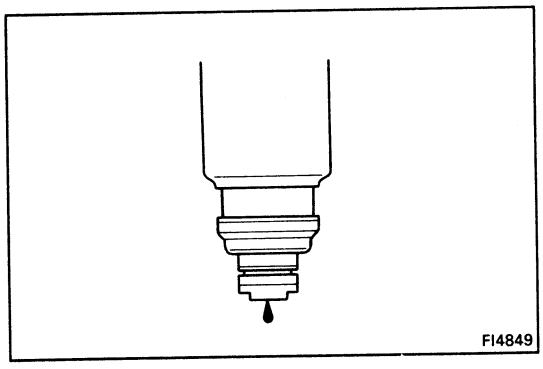

2. INSPECT LEAKAGE

(a) In the condition above, disconnect the test probes of SST (wire) from the battery and check the fuel leakage from the injector.

SST 09842-30070

Fuel drop: One drop or less per minute

(b) Disconnect the battery negative (–) cable.

(c) Remove SST.

SST 09268-41045 and 09843-18020

(d) Reinstall the pressure regulator to the delivery pipe.

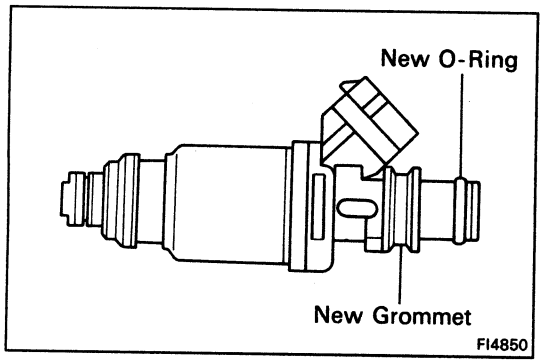

INSTALLATION OF INJECTORS

1. INSTALL INJECTORS AND DELIVERY PIPE

(a) Install a new grommet to the injector.

(b) Apply a light coat of gasoline to a new O-ring and install it to the injector.

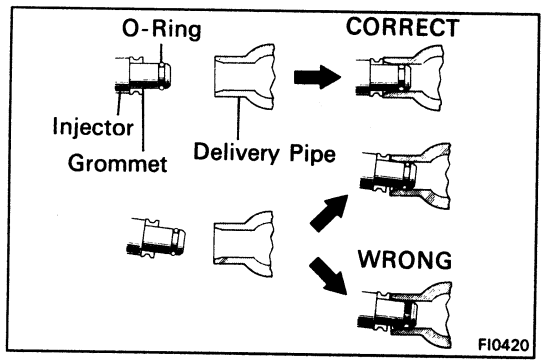

(c) While turning the injector left and right, install it to the delivery pipes. Install the four injectors.

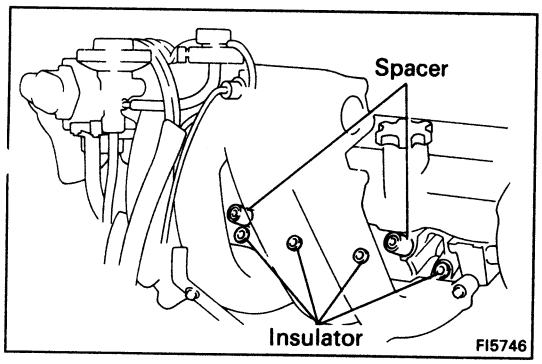

(d) Place four new insulators and the two spacers in position on the cylinder head.

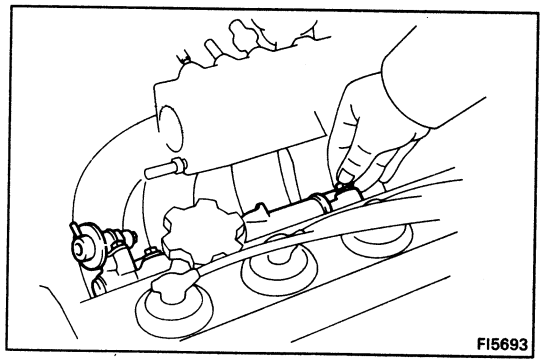

(e) Place the four injectors together with the delivery pipe in position on the cylinder head.

(f) Temporarily install the two bolts holding the delivery pipe to the cylinder head.

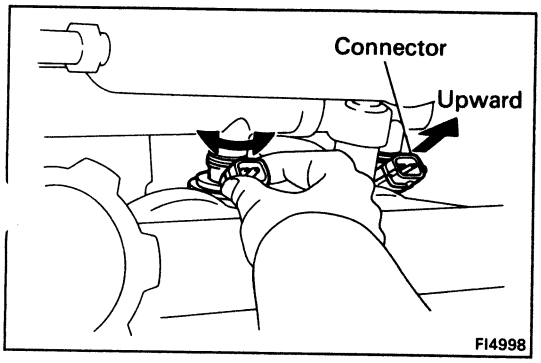

(g) Check that the injectors rotate smoothly.

HINT: If injectors do not rotate smoothly, the probable cause is incorrect installation of O-rings. Replace the O-rings.

(h) Position the injector connector upward.

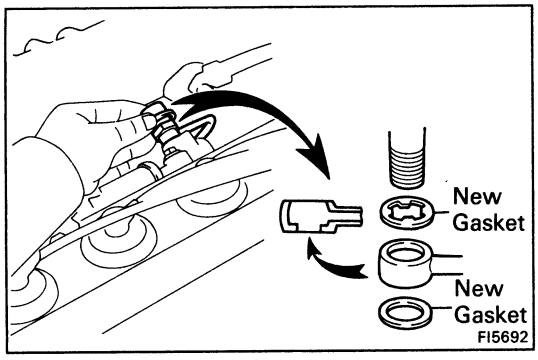

(i) Temporarily connect the fuel inlet hose to the delivery pipe with two new gaskets and the pulsation damper.

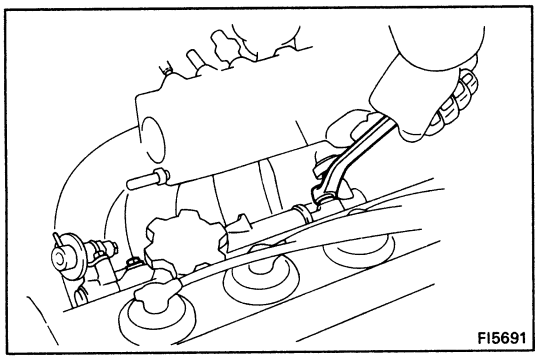

(j) Tighten the two bolts holding the delivery pipe to the cylinder head.

Torque: 130 kg-cm (9 ft-lb, 13 N·m)

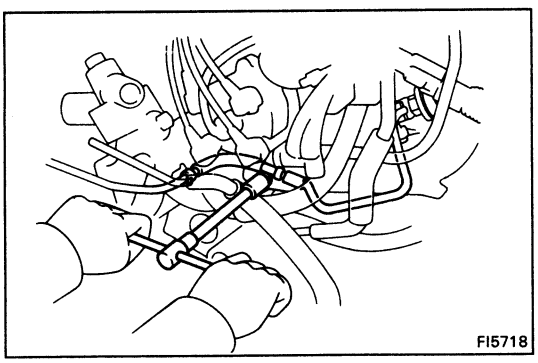

(k) Install the bolt holding the fuel inlet hose to the cylinder head.

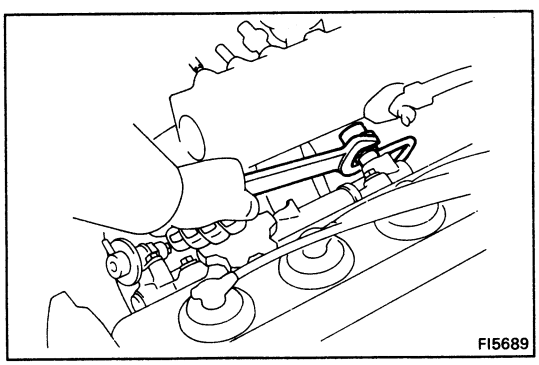

(l) Tighten the pulsation damper.

Torque: 350 kg-cm (25 ft-lb, 34 N·m)

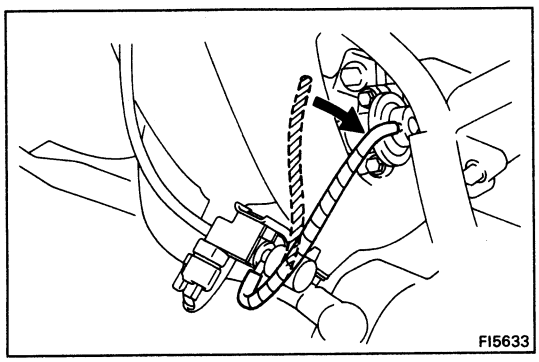

2. CONNECT VACUUM SENSING HOSE TO FUEL PRESSURE REGULATOR

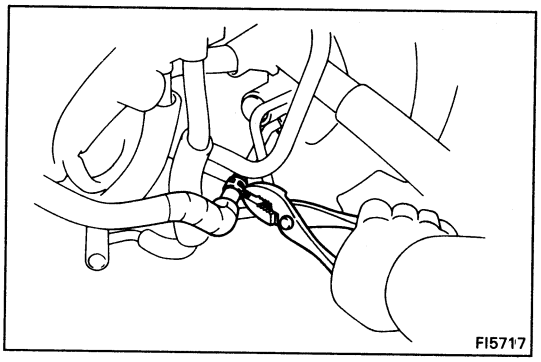

3. CONNECT FUEL RETURN HOSE TO RETURN PIPE

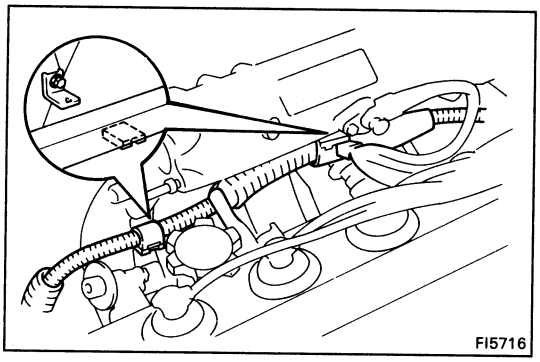

4. INSTALL ENGINE WIRE

(a) Install the two wire clamps to the wire brackets on the intake manifold.

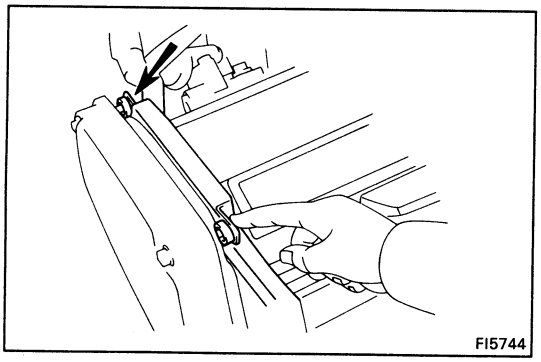

(b) Install the two wire clamps to the mount bolts of the No.2 timing belt cover.

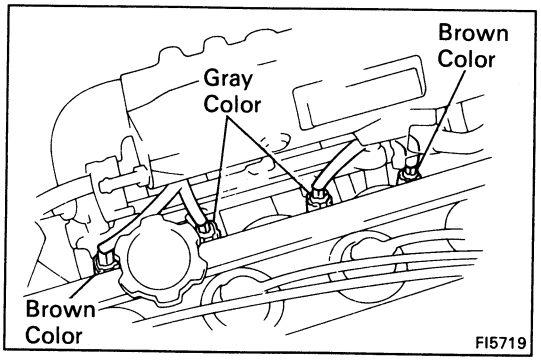

5. CONNECT INJECTOR CONNECTORS

Connect the injector connectors as shown in the figure.

HINT: No.1 and No.4 injector connectors are brown. No.2 and No.3 injector connectors are gray.

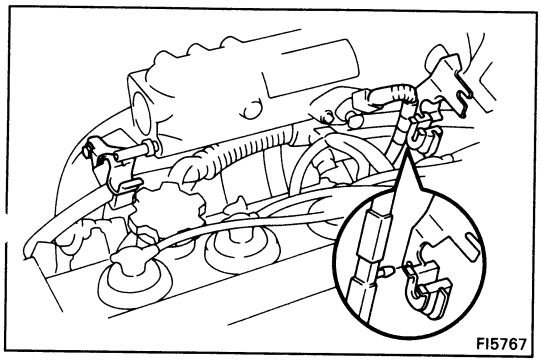

6. INSTALL ACCELERATOR BRACKETS

(a) Install the RH accelerator bracket with the bolt.

(b) Install the LH accelerator bracket with the two bolts. Connect the clip of the engine wire to the LH accelerator bracket.

7. CONNECT BRAKE BOOSTER VACUUM HOSE TO INTAKE MANIFOLD

8. INSTALL COLD START INJECTOR PIPE
(See step 2 on page FI-104)

9. (w/ CRUISE CONTROL SYSTEM)
INSTALL CRUISE CONTROL ACTUATOR
(See step 33 on page EM-225)

10. INSTALL AIR CLEANER
(See step 35 on page EM-226)

11. INSTALL ENGINE HOOD SIDE PANELS

12. CONNECT CABLE TO NEGATIVE TERMINAL OF BATTERY

13. CHECK FOR FUEL LEAKAGE (See page FI-9)

Fuel Tank and Lines

COMPONENTS

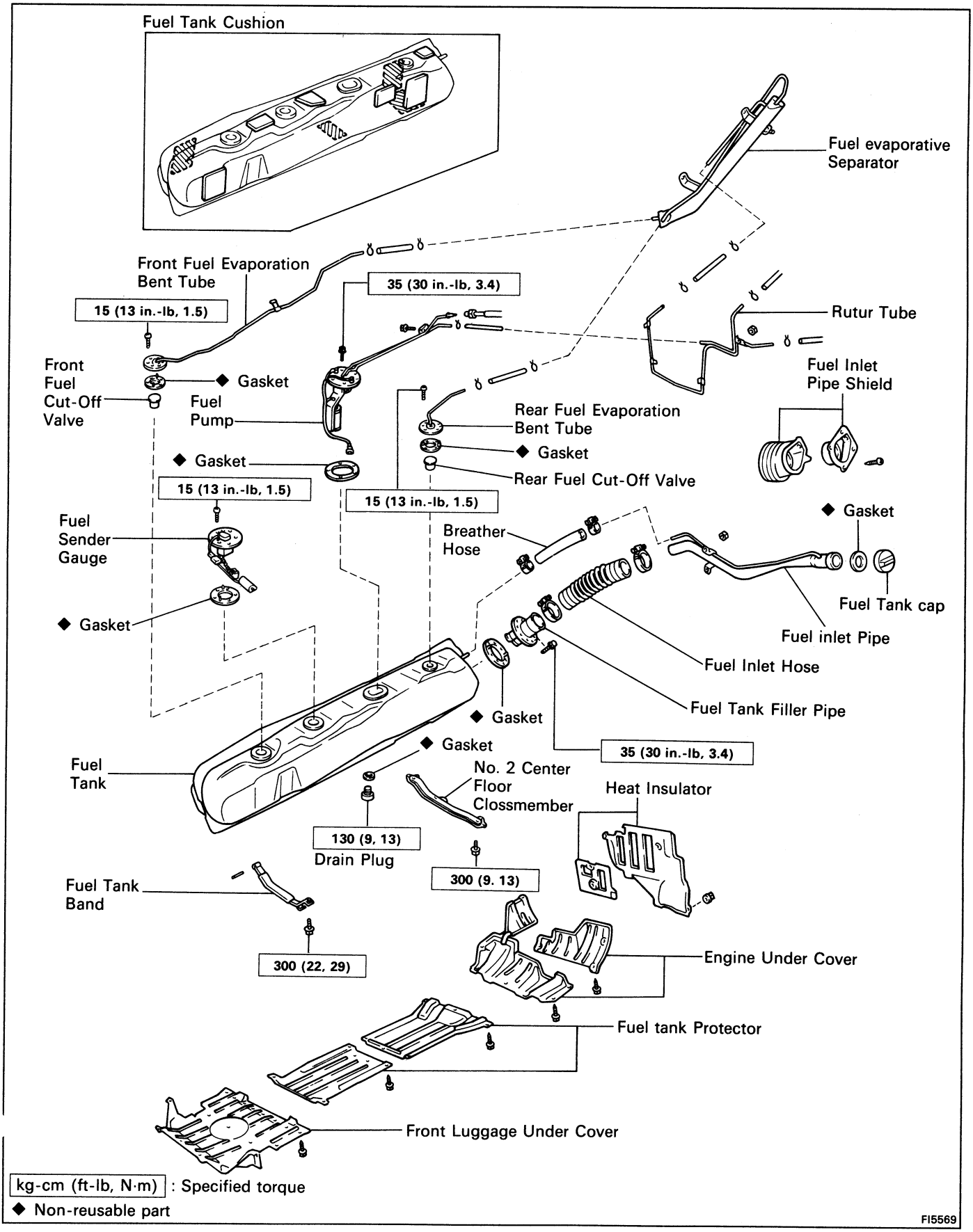

PRECAUTIONS

1. **Always use new gaskets when replacing the fuel tank or component parts.**
2. **Apply the proper torque to all parts tightened.**

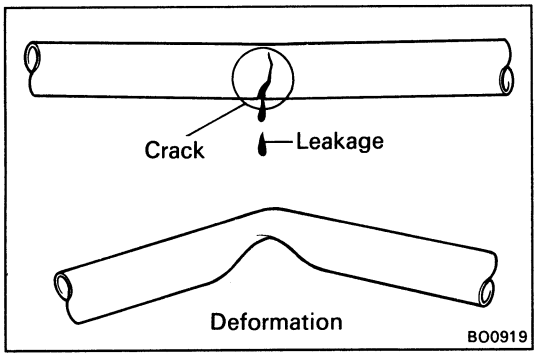

INSPECT FUEL LINES AND CONNECTIONS

(a) Check the fuel lines for cracks or leakage, and all connections f.

(b) Check the fuel tank vapor vent system hoses and connections for looseness, sharp bends or damage.

(c) Check the fuel tank for deformation, cracks, fuel leakage or tank band looseness.

(d) Check the filler neck for damage or fuel leakage.

(e) Hose and tube connections are as shown in the illustration.

If a problem is found, repair or replace the parts as necessary.

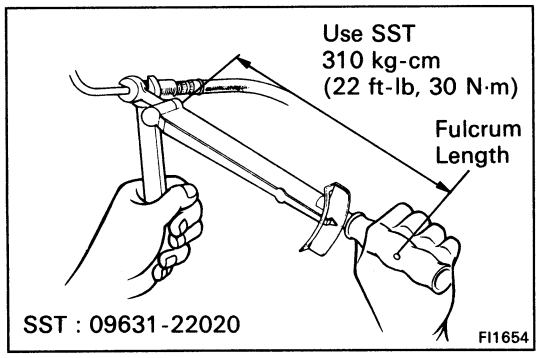

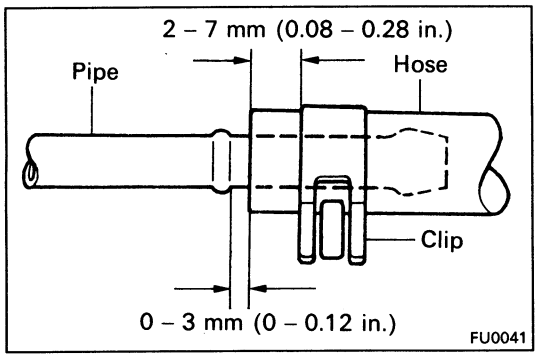

AIR INDUCTION SYSTEM
Air Flow Meter (3S-GTE)

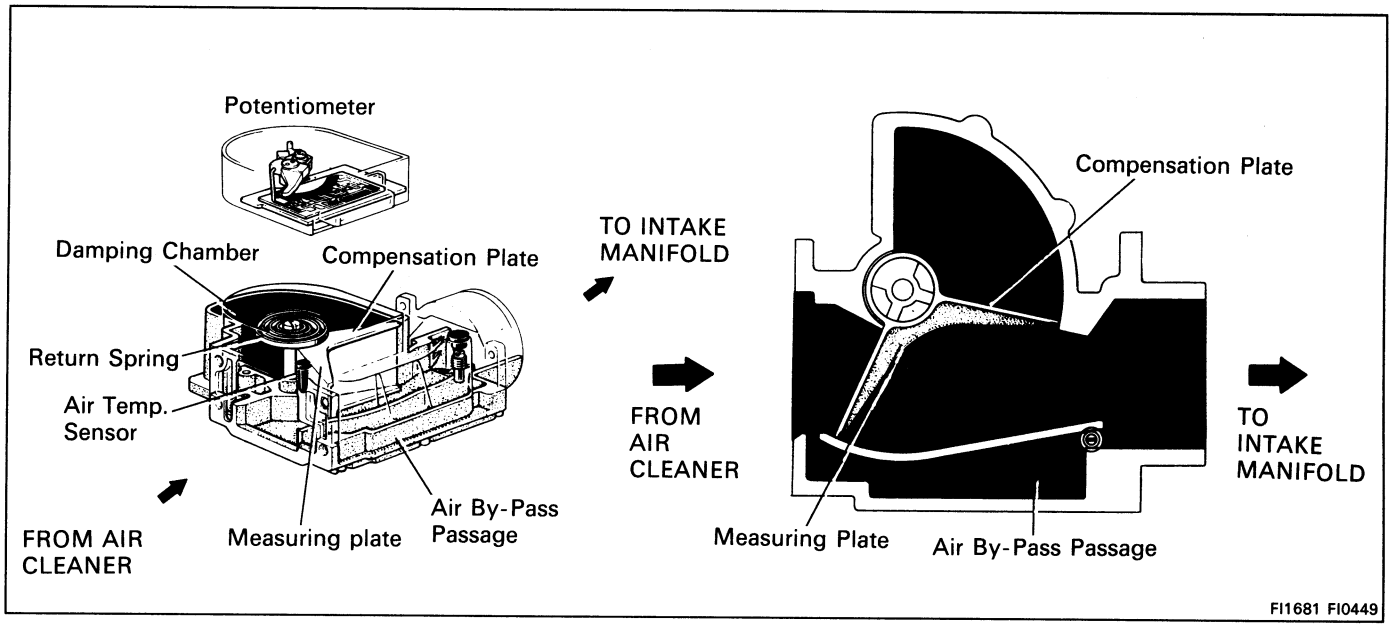

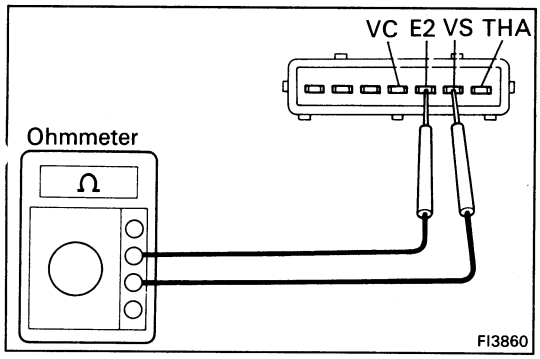

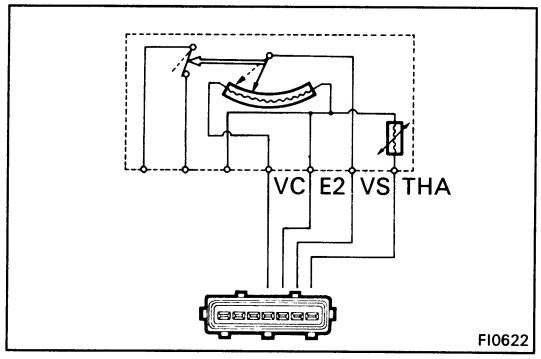

ON-VEHICLE INSPECTION

1. INSPECT RESISTANCE OF AIR FLOW METER

(a) Disconnect the air flow meter connector.

(b) Using an ohmmeter, measure the resistance between each terminals.

Between terminals	Resistance	Temperature
VS – E2	200 – 600 Ω	–
VC – E2	200 – 400 Ω	–
THA – E2	10 – 20 kΩ 4 – 7 kΩ 2 – 3 kΩ 0.9 – 1.3 kΩ 0.4 – 0.7 kΩ	–20°C (–4°F) 0°C (32°F) 20°C (68°F) 40°C (104°F) 60°C (140°F)

If the resistance is not as specifield, replace the air flow meter.

(c) Reconnect the air flow meter connector.

REMOVAL OF AIR FLOW METER

1. DISCONNECT CABLE FROM NEGATIVE TERMINAL OF BATTERY

CAUTION: Work must be started after approx. 20 seconds or longer from the time the ignition switch is turned to the "LOCK" position and the negative (–) terminal cable is disconnected from the battery.

2. REMOVE LH ENGINE HOOD SIDE PANEL

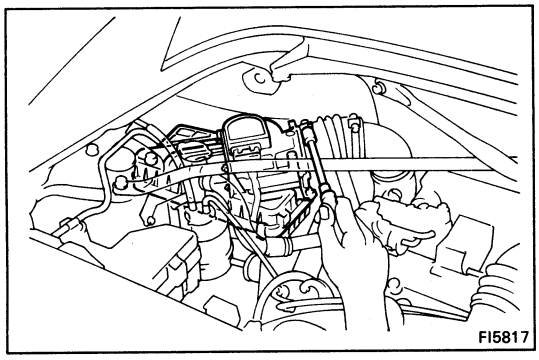

3. **DISCONNECT AIR FLOW METER CONNECTOR**

4. **DISCONNECT AIR CLEANER HOSE FROM AIR FLOW METER**

5. **REMOVE AIR CLEANER CAP AND AIR FLOW METER ASSEMBLY**

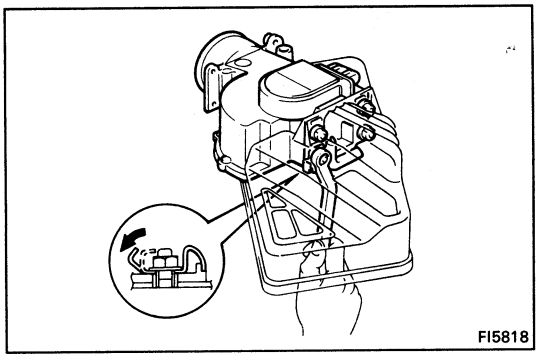

6. **REMOVE AIR FLOW METER FROM AIR CLEANER CAP**
   (a) Pry off the lock plate.
   (b) Remove the bolt, four nuts, air flow meter and gasket.

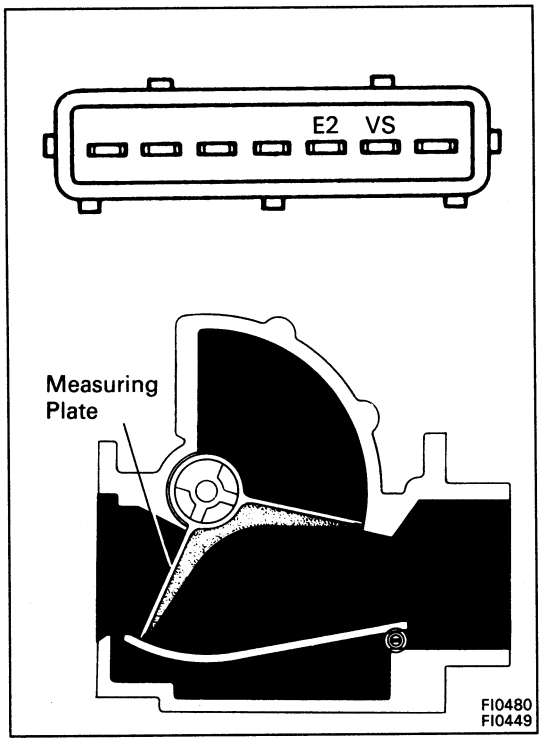

INSPECTION OF AIR FLOW METER

INSPECT AIR FLOW METER

Using an ohmmeter, measure the resistance between terminals VS and E2 by moving the measuring plate.

Resistance: 200 – 600 Ω at fully closed
20 – 1,200 Ω at fully open

HINT: Resistance will change in a wave pattern as the measuring plate slowly opens.

If the resistance is not as specifield, replace the air flow meter.

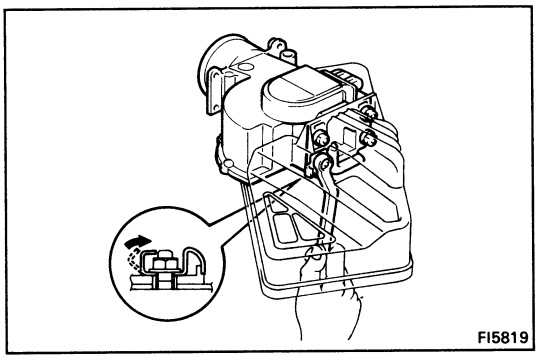

INSTALLATION OF AIR FLOW METER

1. **INSTALL AIR FLOW METER FROM AIR CLEANER CAP**
   (a) Install a new gasket and the air flow meter with the bolt and four nuts.
   (b) Pry the lock plate.

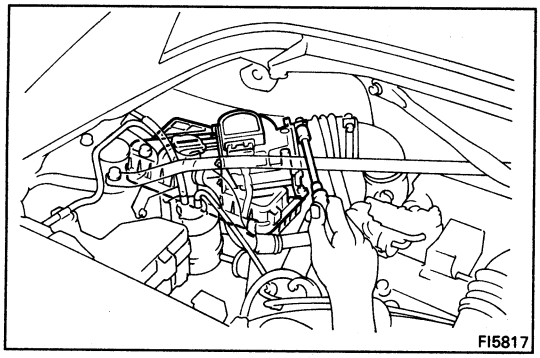

2. INSTALL AIR CLEANER CAP AND AIR FLOW METER ASSEMBLY
3. CONNECT AIR CLEANER HOSE TO AIR FLOW METER
4. CONNECT AIR FLOW METER CONNECTOR
5. INSTALL LH ENGINE HOOD SIDE PANEL
6. CONNECT CABLE FROM NEGATIVE TERMINAL OF BATTERY

Throttle Body (3S-GTE)

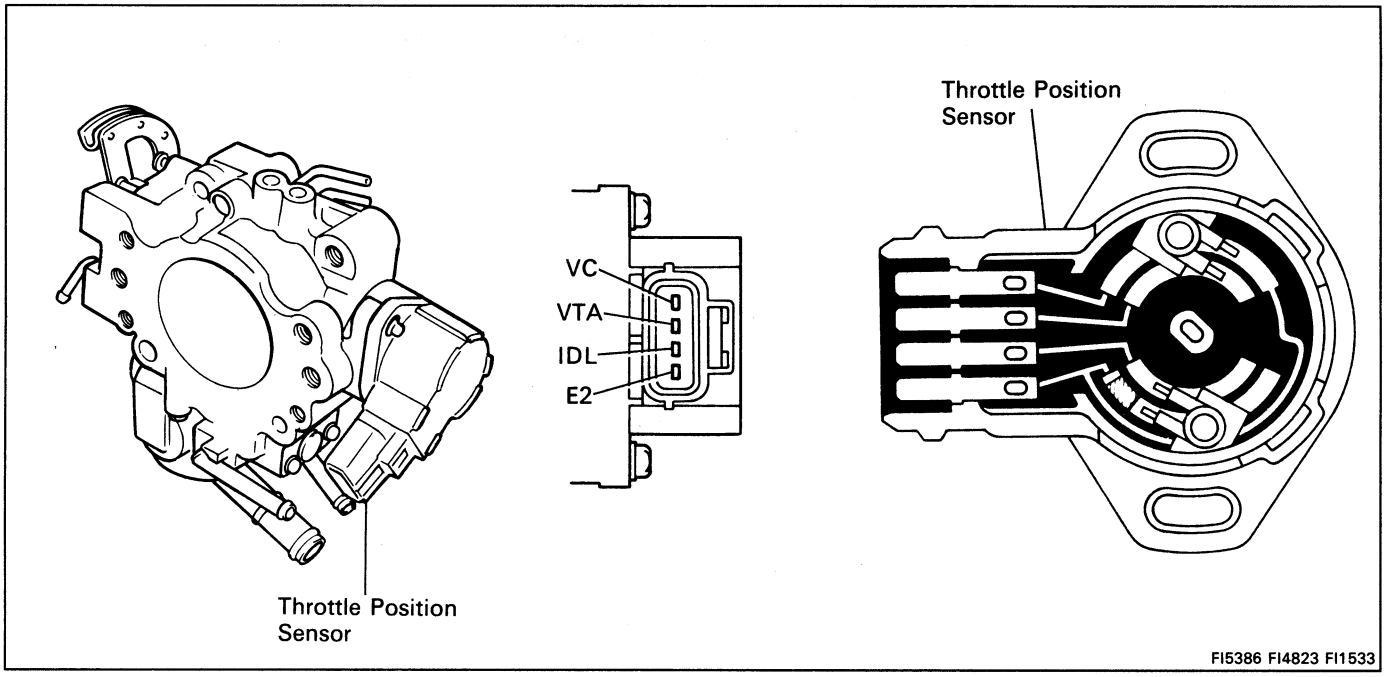

FI5386 FI4823 FI1533

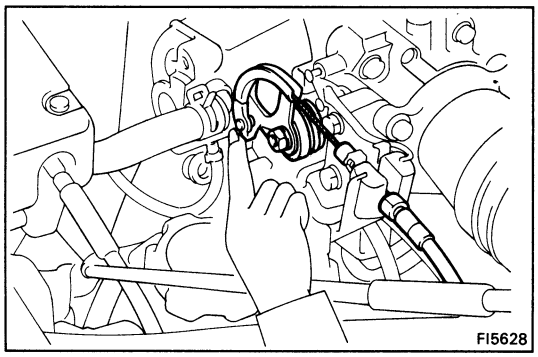

FI5628

ON-VEHICLE INSPECTION

1. INSPECT THROTTLE BODY

(a) Check that the throttle linkage moves smoothly.

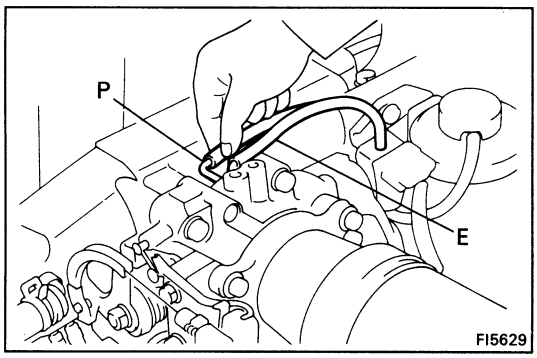

FI5629

(b) Check the vacuum at each port.

- Start the engine.
- Check the vacuum with your finger.

Port No.	At idling	Other than idling
E	No vacuum	Vacuum
P	No vacuum	Vacuum

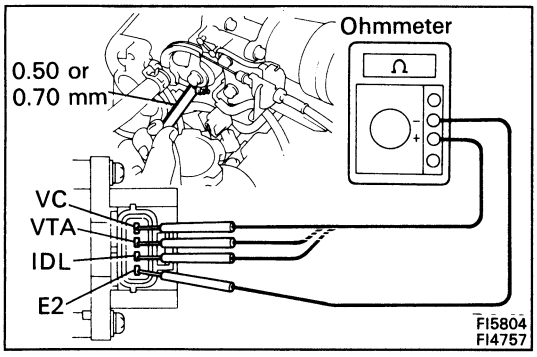

FI5804
FI4757

2. INSPECT THROTTLE POSITION SENSOR

(a) Disconnect the sensor connector.

(b) Insert a feeler gauge between the throttle stop screw and stop lever.

(c) Using an ohmmeter, measure the resistance between each terminal.

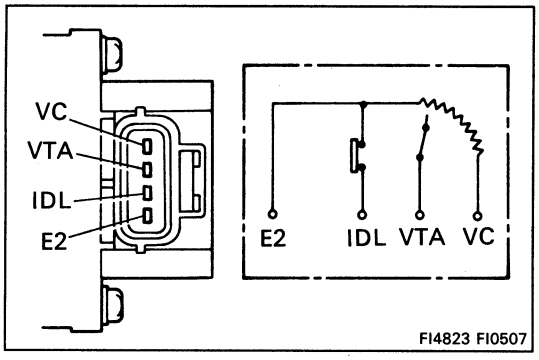

Clearance between Lever and stop screw	Between terminals	Resistance
0 mm (0 in.)	VTA – E2	0.2 – 0.8 kΩ
0.50 mm (0.020 in.)	IDL – E2	2.3 kΩ or less
0.70 mm (0.028 in.)	IDL – E2	Infinity
Throttle valve fully opened	VTA – E2	3.3 – 10.3 kΩ
–	VC – E2	3 – 8.3 kΩ

(d) Reconnect the sensor connector.

REMOVAL OF THROTTLE BODY

1. DISCONNECT CABLE FROM NEGATIVE TERMINAL OF BATTERY

CAUTION: Work must be started after approx. 20 seconds or longer from the time the ignition switch is turned to the "LOCK" position and the negative (–) terminal cable is disconnected from the battery.

2. DRAIN ENGINE COOLANT (See page CO-6)

3. DISCONNECT ACCELERATOR CABLE FROM THROTTLE LINKAGE

4. REMOVE NO.1 AIR INTAKE CONNECTOR

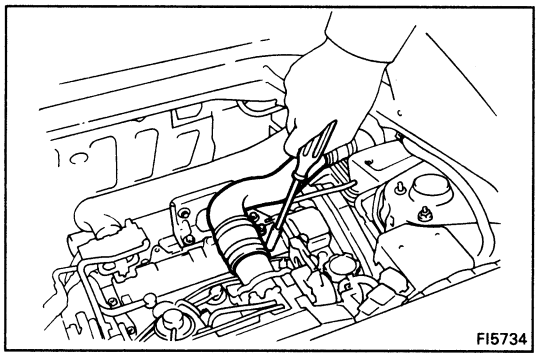

5. REMOVE INTAKE AIR CONNECTOR

Remove the four bolts and air connector.

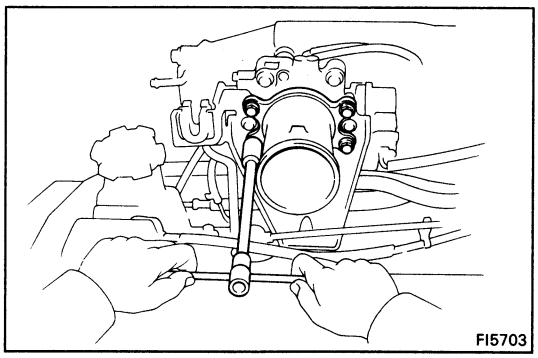

6. REMOVE INTAKE AIR CONNECTOR STAY

Remove the four bolts, air connector stay and two spacers.

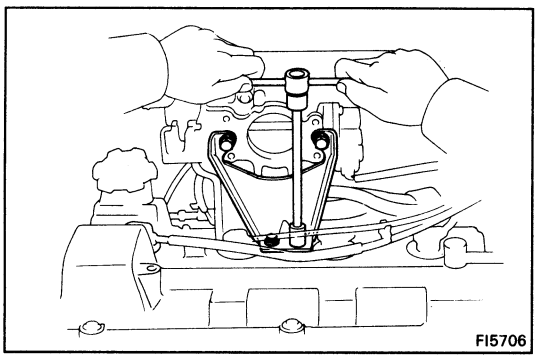

7. DISCONNECT THROTTLE POSITION SENSOR CONNECTOR

8. DISCONNECT ISC VALVE CONNECTOR

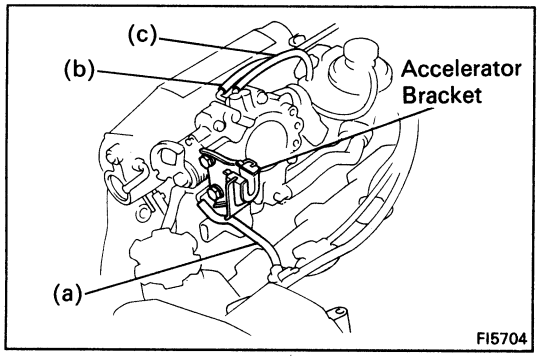

9. REMOVE ACCELERATOR BRACKET

10. DISCONNECT HOSES FROM THROTTLE BODY

(a) PCV hose from cylinder head cover

(b) Vacuum hose (from throttle body P port) from vacuum pipe

(c) Vacuum hose (from throttle body E port) from EGR VSV

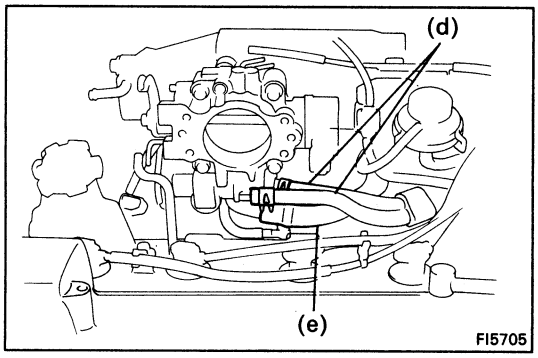

(d) Two water by-pass hoses from No.1 air tube

(e) Air hose from No.1 air tube

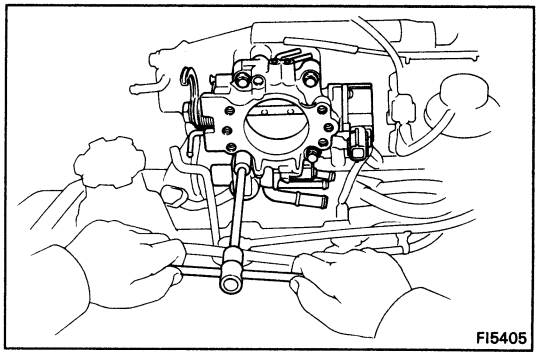

11. REMOVE THROTTLE BODY

Remove the four bolts, throttle body and gasket.

12. IF NECESSARY, REMOVE ISC VALVE FROM THROTTLE BODY (See step 2 on page FI-149)

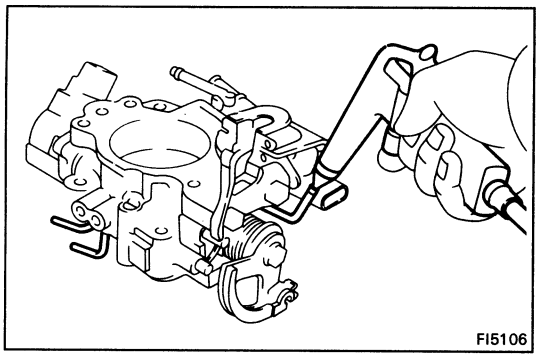

INSPECTION OF THROTTLE BODY

1. CLEAN THROTTLE BODY

(a) Using a soft brush and carburetor cleaner, clean the cast parts.

(b) Using compressed air, clean all the passages and apertures.

NOTICE: To prevent deterioration, do not clean the throttle position sensor.

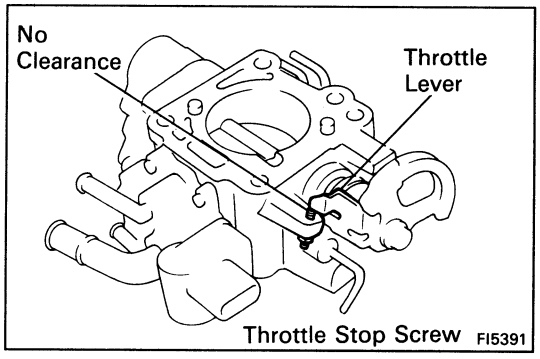

2. INSPECT THROTTLE VALVE

Check that there is no clearance between the throttle stop screw and throttle lever when the throttle valve is fully closed.

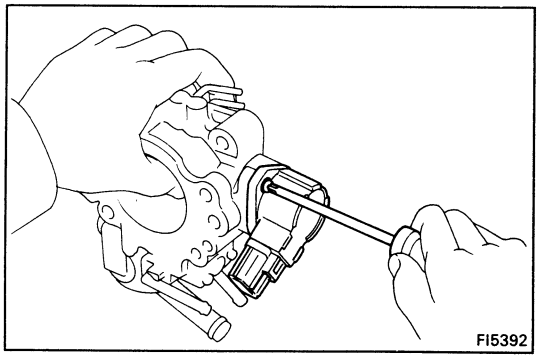

3. INSPECT THROTTLE POSITION SENSOR

(See step 2 on page FI-71)

4. IF NECESSARY, ADJUST THROTTLE POSITION SENSOR

(a) Loosen the two set screws of the sensor.

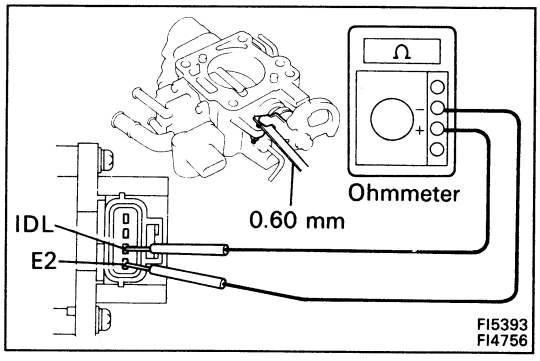

(b) Insert a 0.60 mm (0.024 in.) feeler gauge, between the throttle stop screw and stop lever.

(c) Connect the test probe of an ohmmeter to the terminals IDL and E2 of the sensor.

(d) Gradually turn the sensor clockwise until the ohmmeter deflects, and secure it with the two set screws.

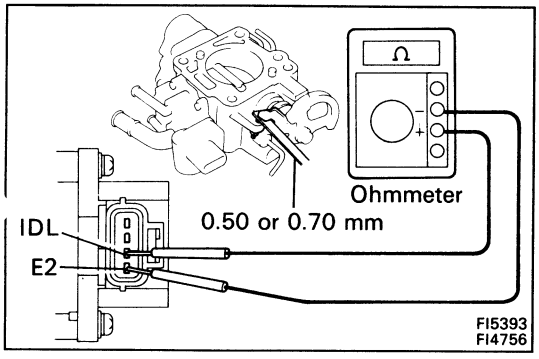

(e) Recheck the continuity between terminals IDL and E2.

Clearance between lever and stop screw	Continuity (IDL-E2)
0.50 mm (0.020 in.)	Continuity
0.70 mm (0.028 in.)	No continuity

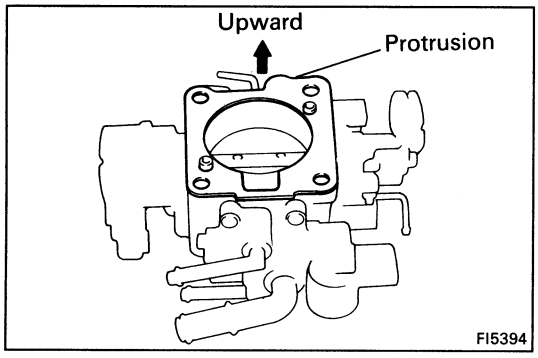

INSTALLATION OF THROTTLE BODY

1. **INSTALL ISC VALVE TO THROTTLE BODY**
(See step 1 on page FI-150)

2. **INSTALL THROTTLE BODY**

(a) Place a new gasket on the throttle body, facing the protrusion upward.

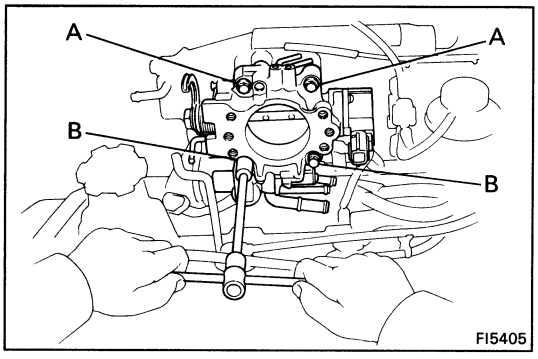

(b) Install the throttle body with the four bolts.

Torque: 195 kg-cm (14 ft-lb, 19 N·m)

HINT: Each bolt is indicated in the figure.

Bolt length: A 45 mm (1.77 in.)
B 70 mm (2.76 in.)

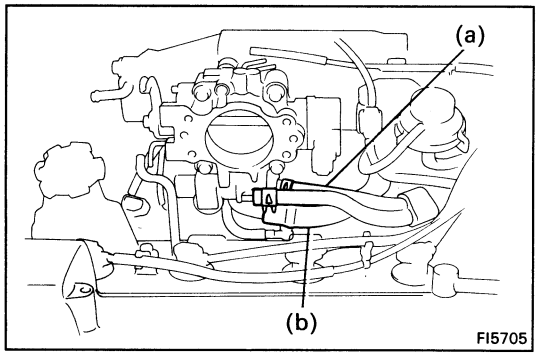

3. **CONNECT HOSES TO THROTTLE BODY**

(a) Two water by-pass hoses from No.1 air tube

(b) Air hose from No.1 air tube

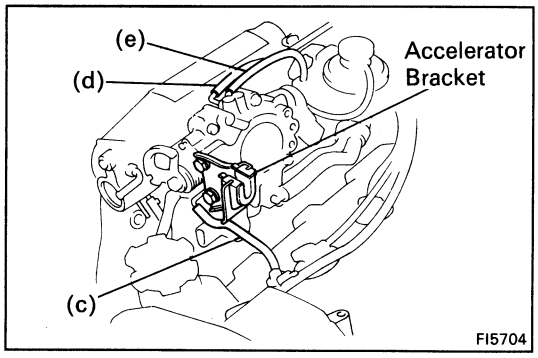

(c) PCV hose from cylinder head cover

(d) Vacuum hose (from throttle body P port) from vacuum pipe

(e) Vacuum hose (from throttle body E port) from EGR VSV

4. **INSTALL ACCELERATOR BRACKET**

5. **CONNECT ISC VALVE CONNECTOR**

6. **CONNECT THROTTLE POSITION SENSOR CONNECTOR**

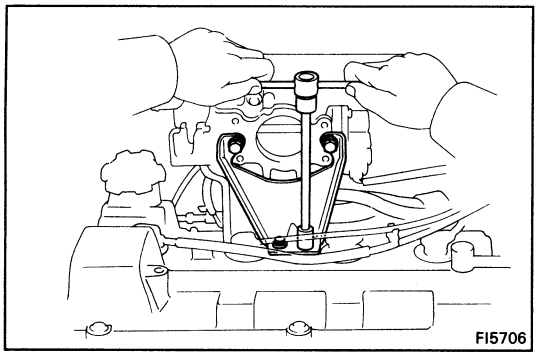

7. INSTALL INTAKE AIR CONNECTOR STAY

Install the two spacers and air connector stay with four bolts.

Torque:

10 mm head bolt 80 kg-cm (69 in.-lb, 7.8 N·m)
12 mm head bolt 195 kg-cm (14 ft-lb, 19 N·m)

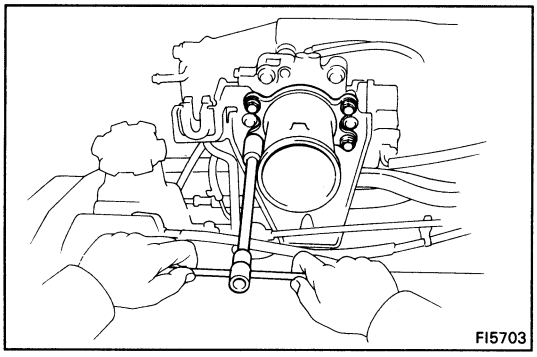

8. INSTALL INTAKE AIR CONNECTOR

Install the air connector with the four bolts.

Torque: 195 kg-cm (14 ft-lb, 19 N·m)

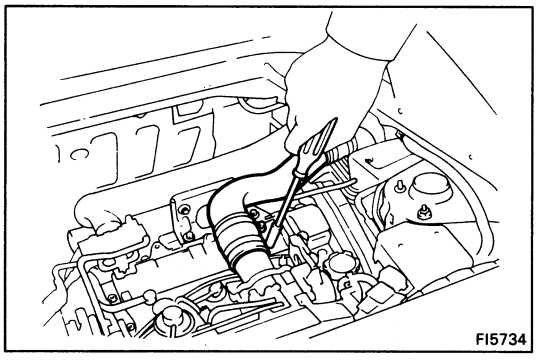

9. INSTALL NO.1 AIR INTAKE CONNECTOR

10. CONNECT ACCELERATOR CABLE, AND ADJUST IT

11. FILL WITH ENGINE COOLANT (See page CO-7)

12. CONNECT CABLE TO NEGATIVE TERMINAL OF BATTERY

Throttle Body (5S-FE)

M/T

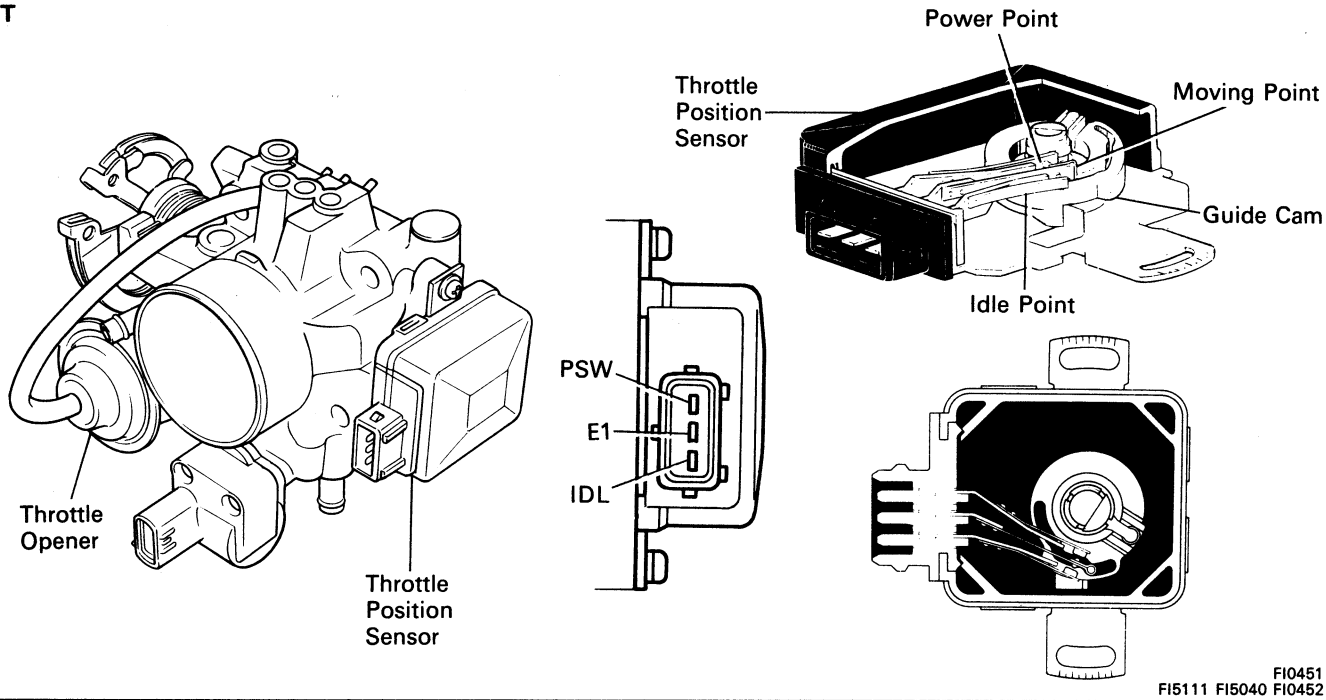

FI0451
FI5111 FI5040 FI0452

A/T

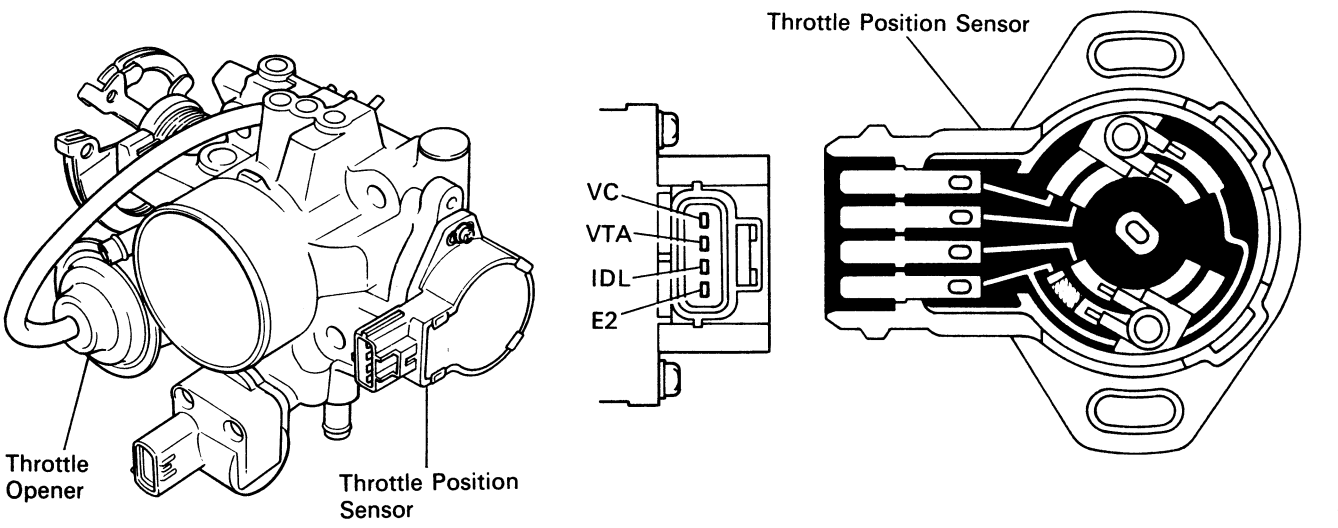

FI5112 FI4823 FI1533

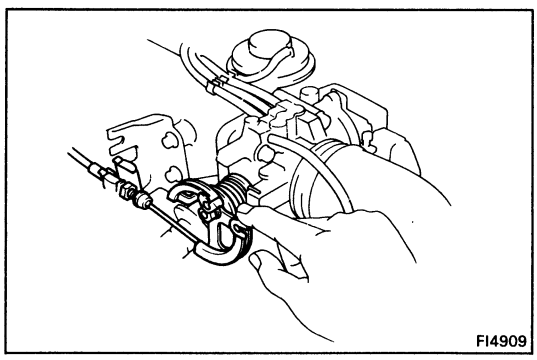

FI4909

ON-VEHICLE INSPECTION

1. **INSPECT THROTTLE BODY**
   (a) Check that the throttle linkage moves smoothly.

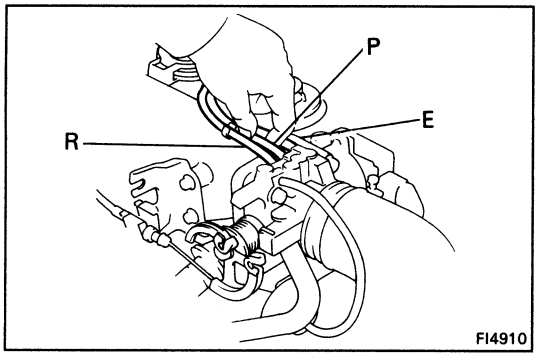

(b) Check the vacuum at each port.
- Start the engine.
- Check the vacuum with your finger.

Port name	At idling	Other than idling
P	No vacuum	Vacuum
E	No vacuum	Vacuum
R	No vacuum	No vacuum

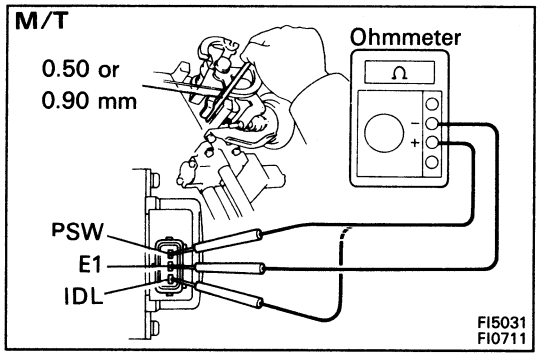

2. (M/T)
INSPECT THROTTLE POSITION SENSOR

(a) Apply vacuum to the throttle opener.

(b) Disconnect the sensor connector.

(c) Insert a feeler gauge between the throttle stop screw and stop lever.

(d) Using an ohmmeter, measure the resistance between each terminal.

Clearance between lever and stop screw	Continuity between terminals	
	IDL – E1	PSW – E1
0.50 mm (0.020 in.)	Continuity	No continuity
0.90 mm (0.035 in.)	No continuity	No continuity
Throttle valve fully opened	No continuity	Continuity

(e) Reconnect the sensor connector.

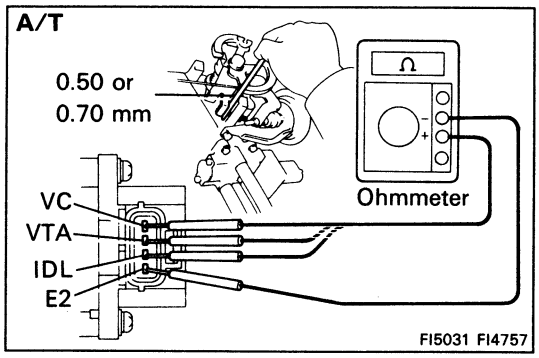

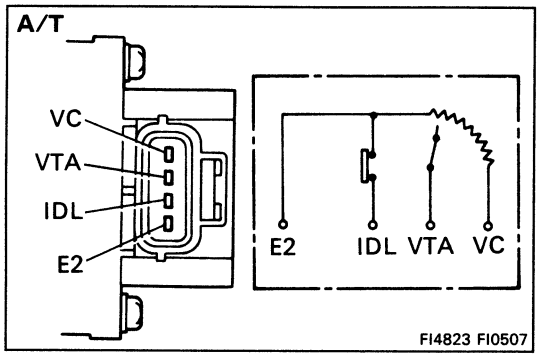

3. (A/T)
INSPECT THROTTLE POSITION SENSOR

(a) Apply vacuum to the throttle opener.

(b) Disconnect the sensor connector.

(c) Insert a feeler gauge between the throttle stop screw and stop lever.

(d) Using an ohmmeter, measure the resistance between each terminal.

Clearance between lever and stop screw	Between terminals	Resistance
0 mm (0 in.)	VTA – E2	0.2 – 0.8 kΩ
0.50 mm (0.020 in.)	IDL – E2	2.3 kΩ or less
0.70 mm (0.028 in.)	IDL – E2	Infinity
Throttle valve fully opened	VTA – E2	3.3 – 10 kΩ
–	VC – E2	3 – 7 kΩ

(e) Reconnect the sensor connector.

4. INSPECT THROTTLE OPENER

A. Warm up engine

Allow the engine to warm up to normal operating temperature.

B. Check idle speed

Idle speed: 700 ± 50 rpm USA M/T
700 ± 50 rpm USA A/T
850 ± 50 rpm CANADA M/T
750 ± 50 rpm CANADA A/T

C. Check and adjust throttle opener setting speed

(a) Disconnect the vacuum hose from the throttle opener, and plug the hose end.

(b) Maintain the engine at 2,500 rpm.

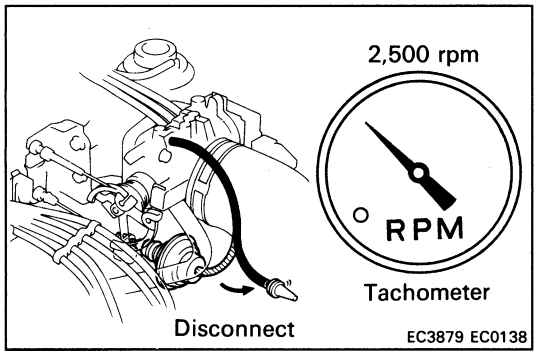

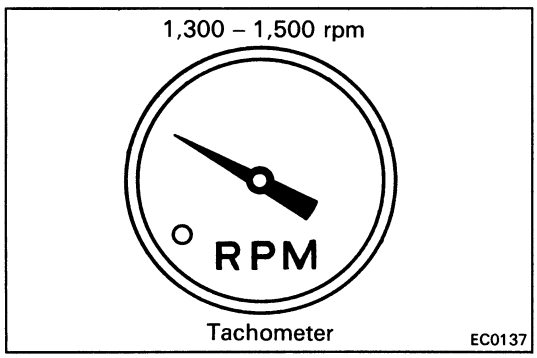

(c) Release the throttle valve.

(d) Check that the throttle opener is set.

Throttle opener setting speed:
1,300 – 1,500 rpm (w/ Cooling fan OFF)

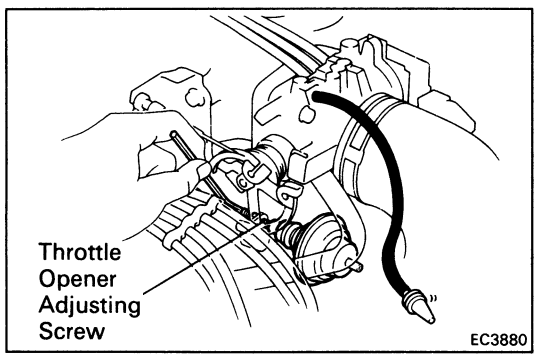

(e) Using a hexagon wrench, adjust the throttle opener setting by turning the throttle opener adjusting screw.

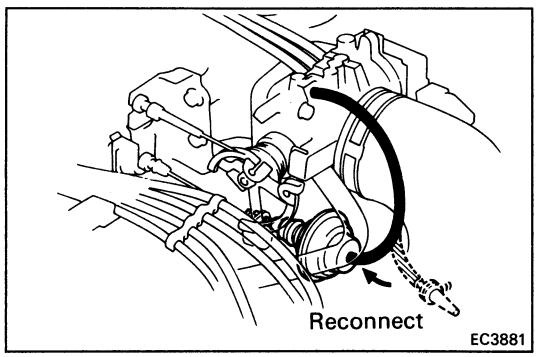

(f) Reconnect the vacuum hose to the throttle opener.

REMOVAL OF THROTTLE BODY

1. **DISCONNECT CABLE FROM NEGATIVE TERMINAL OF BATTERY**

   CAUTION: Work must be started after approx. 20 seconds or longer from the time the ignition switch is turned to the "LOCK" position and the negative (–) terminal cable is disconnected from the battery.

2. **REMOVE LH ENGINE HOOD SIDE PANEL**

3. **DRAIN ENGINE COOLANT (See page CO-6)**

4. **(A/T)**
   DISCONNECT THROTTLE CABLE FROM THROTTLE LINKAGE

5. **DISCONNECT ACCELERATOR CABLE FROM THROTTLE LINKAGE**

6. **REMOVE AIR CLEANER**
   (See step 9 on page EM-182)

7. **DISCONNECT THROTTLE POSITION SENSOR CONNECTOR**

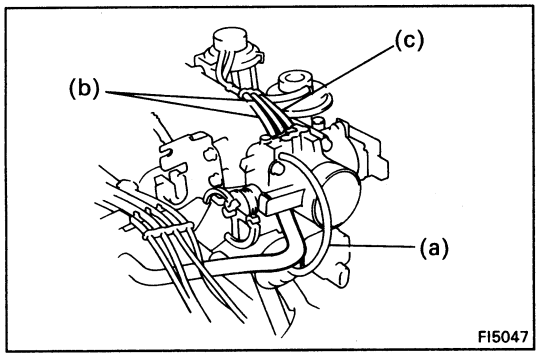

8. **DISCONNECT ISC VALVE CONNECTOR**

9. **DISCONNECT HOSES FROM THROTTLE BODY**
   (a) PCV hose
   (b) Two vacuum hoses from EGR vacuum modulator
   (c) Vacuum hose from EVAP VSV

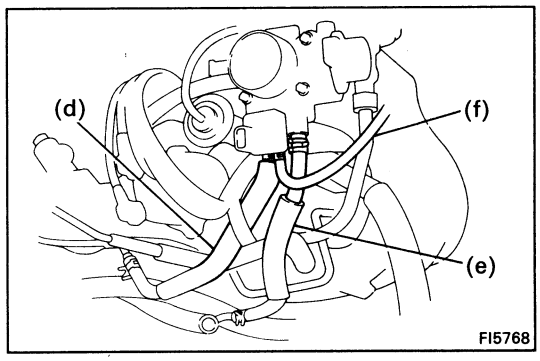

   (d) Water by-pass hose from water outlet
   (e) Water by-pass hose from water by-pass pipe
   (f) Air hose from A/C VSV

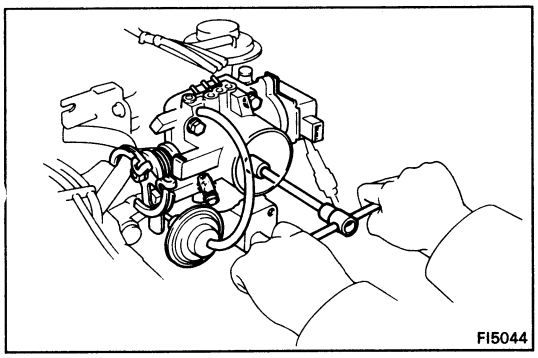

10. **REMOVE THROTTLE BODY**
    Remove the four bolts, throttle body and gasket.

11. **IF NECESSARY, REMOVE ISC VALVE FROM THROTTLE BODY**
    (See step 2 on page FI-152)

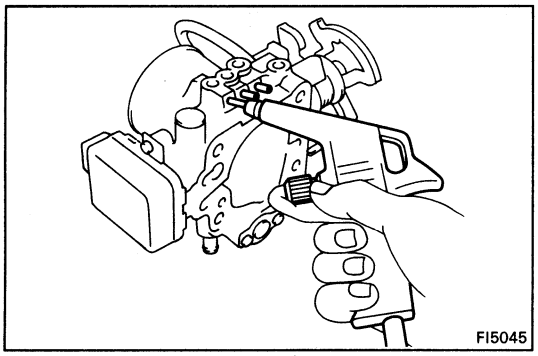
FI5045

INSPECTION OF THROTTLE BODY

1. CLEAN THROTTLE BODY

(a) Using a soft brush and carburetor cleaner, clean the cast parts.

(b) Using compressed air, clean all the passages and apertures.

NOTICE: To prevent deterioration, do not clean the throttle position sensor.

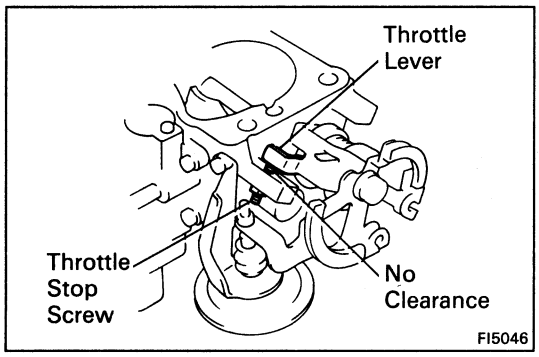

FI5046

2. INSPECT THROTTLE VALVE

(a) Apply vacuum hose to the throttle opener.

(b) Check that there is no clearance between the throttle stop screw and throttle lever when the throttle valve is fully closed.

3. (M/T) INSPECT THROTTLE POSITION SENSOR

(a) Make an angle gauge as shown in the figure.

(b) Apply vacuum hose to the throttle opener.

(c) Set the throttle valve opening to 71° or 81° from the vertical position (incl. throttle valve fully closed angle 6°).

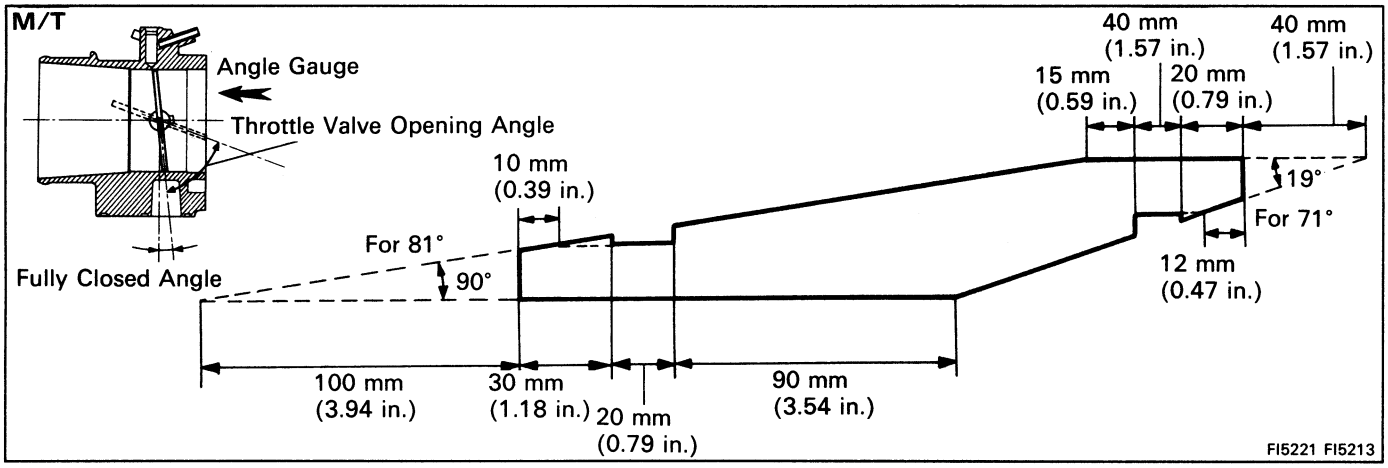

FI5221 FI5213

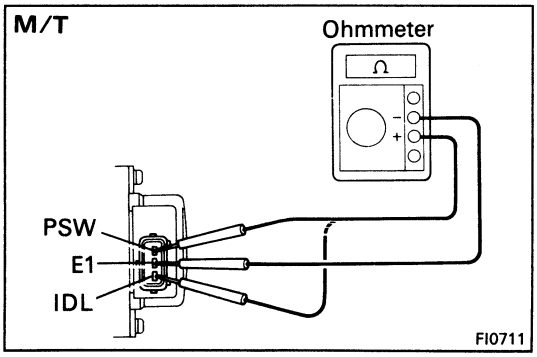

FI0711

(d) Using an ohmmeter, check the continuity between each terminal.

Throttle valve opening angle	Continuity	
	IDL – E1	PSW – E1
71° from vertical	No continuity	No continuity
81° from vertical	No continuity	Continuity
Less than 7.5° from vertical	Continuity	No continuity

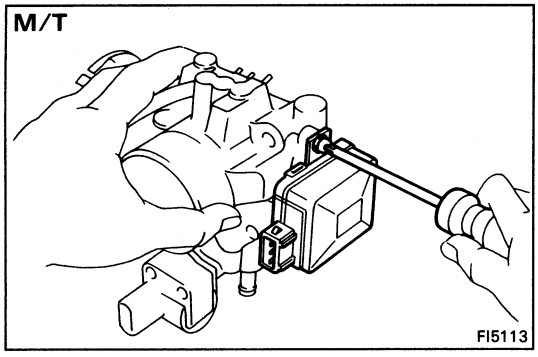

4. **(M/T)**
IF NECESSARY, ADJUST THROTTLE POSITION SENSOR

(a) Loosen the two set screws of the sensor.

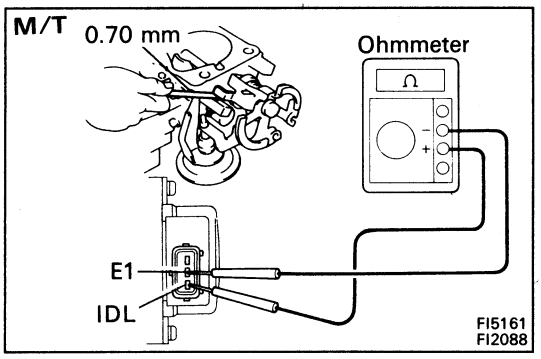

(b) Apply vacuum hose to the throttle opener.

(c) Insert a 0.70 mm (0.028 in.) feeler gauge, between the throttle stop screw and stop lever.

(d) Connect the test probe of an ohmmeter to the terminals IDL and E1 of the sensor.

(e) Gradually turn the sensor clockwise until the ohmmeter deflects, and secure it with the two set screws.

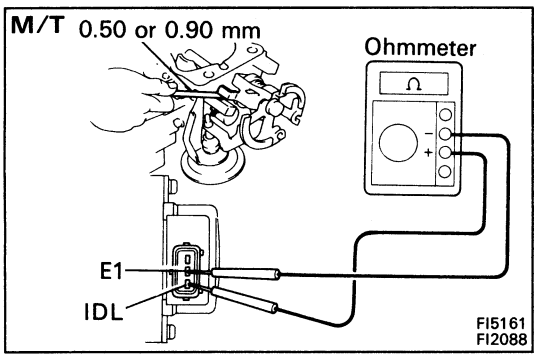

(f) Recheck the continuity between terminals IDL and E1.

Clearance between lever and stop screw	Continuity (IDL – E1)
0.50 mm (0.020 in.)	Continuity
0.90 mm (0.035 in.)	No continuity

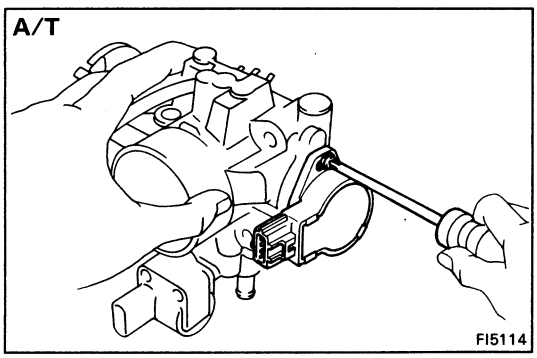

5. **(A/T)**
INSPECT THROTTLE POSITION SENSOR
(See step 3 on page FI-141)

6. **(A/T)**
IF NECESSARY, ADJUST THROTTLE POSITION SENSOR

(a) Loosen the two set screws of the sensor.

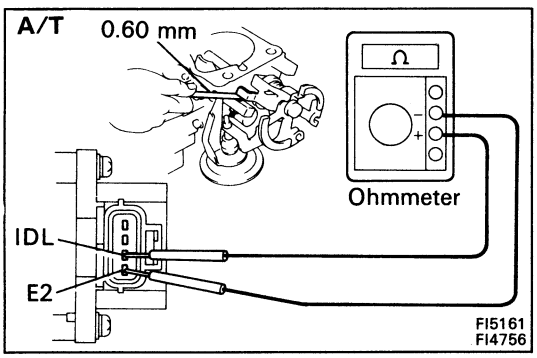

(b) Apply vacuum hose to the throttle opener.

(c) Insert a 0.60 mm (0.024 in.) feeler gauge, between the throttle stop screw and stop lever.

(d) Connect the test probe of an ohmmeter to the terminals IDL and E2 of the sensor.

(e) Gradually turn the sensor clockwise until the ohmmeter deflects, and secure it with the two set screws.

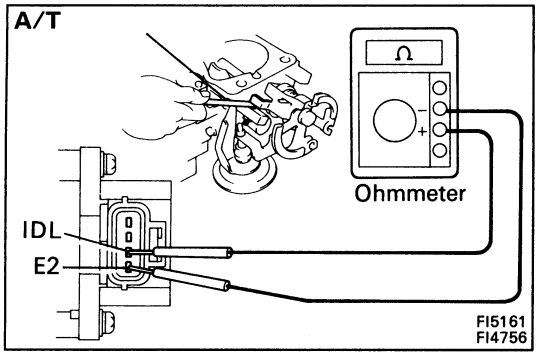

(f) Recheck the continuity between terminals IDL and E2.

Clearance between lever and stop screw	Continuity (IDL – E2)
0.50 mm (0.020 in.)	Continuity
0.70 mm (0.028 in.)	No continuity

INSTALLATION OF THROTTLE BODY

1. **INSTALL ISC VALVE TO THROTTLE BODY**
(See step 1 on page FI-153)

2. **INSTALL THROTTLE BODY**

(a) Place a new gasket on the throttle body, facing the protrusion downward.

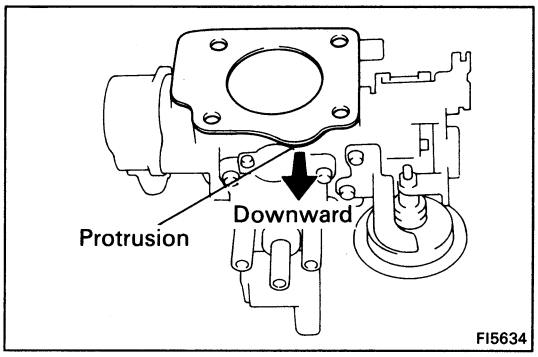

(b) Install the throttle body with the four bolts.

Torque: 195 kg-cm (14 ft-lb, 19 N!.!m)

HINT: Each bolt is indicated in the figure.

Bolt length: A 45 mm (1.77 in.)
B 55 mm (2.17 in.)

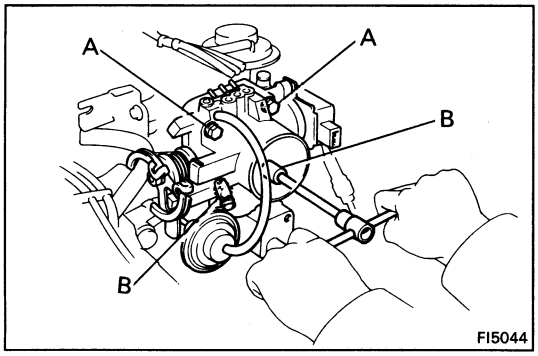

3. **CONNECT HOSES TO THROTTLE BODY**

(a) Water by-pass hose from water outlet

(b) Water by-pass hose from water by-pass pipe

(c) Air hose from A/C VSV

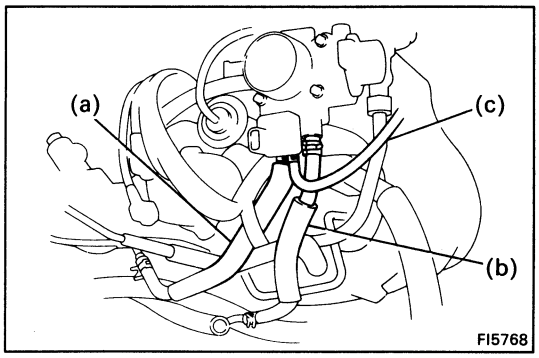

(d) PCV hose

(e) Two vacuum hoses from EGR vacuum modulator

(f) Vacuum hose from EGR VSV

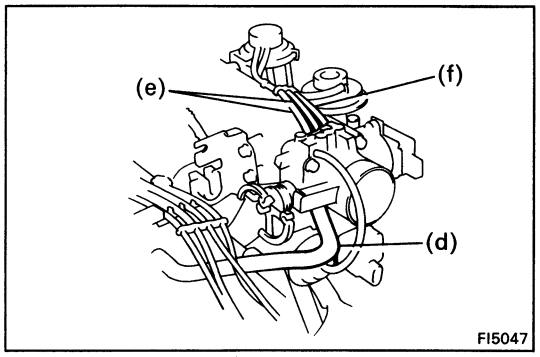

4. **CONNECT ISC VALVE CONNECTOR**
5. **CONNECT THROTTLE POSITION SENSOR CONNECTOR**
6. **INSTALL AIR CLEANER**
   (See step 35 on page EM-226)
7. **CONNECT ACCELERATOR CABLE, AND ADJUST IT**
8. **(A/T)**
   CONNECT THROTTLE CABLE, AND ADJUST IT
9. **FILL WITH ENGINE COOLANT (See page CO-7)**
10. **INSTALL LH ENGINE HOOD SIDE PANEL**
11. **CONNECT CABLE TO NEGATIVE TERMINAL OF BATTERY**

Idle Speed Control (ISC) Valve (3S-GTE)

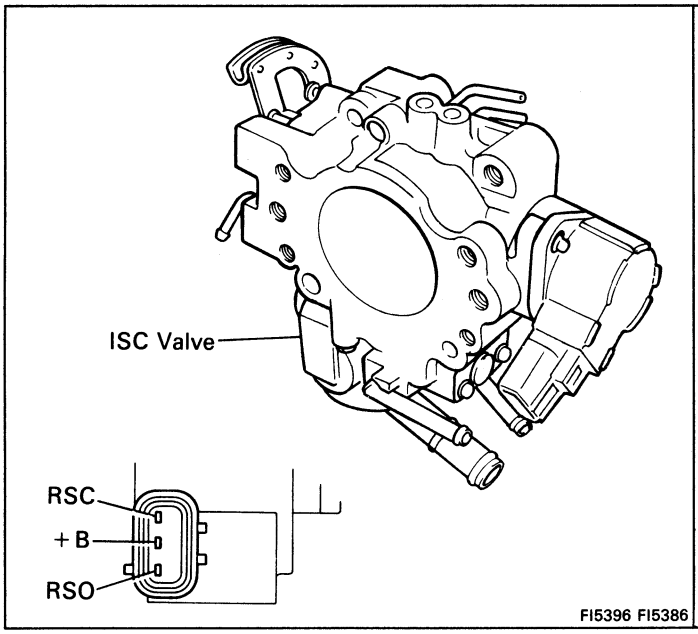

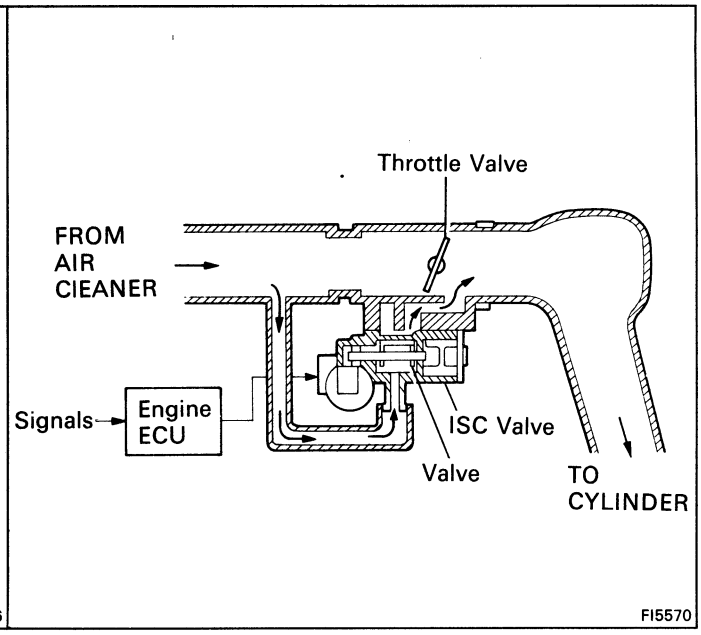

ON-VEHICLE INSPECTION

1. INSPECT ISC VALVE OPERATION

(a) Initial conditions:

- Engine at normal operating temperature
- Idle speed set correctly

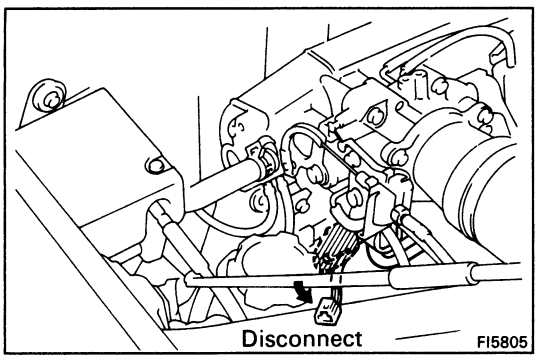

(b) Disconnect the ISC valve connector.

(c) Check the engine rpm.

Engine rpm: 1,000 rpm or more

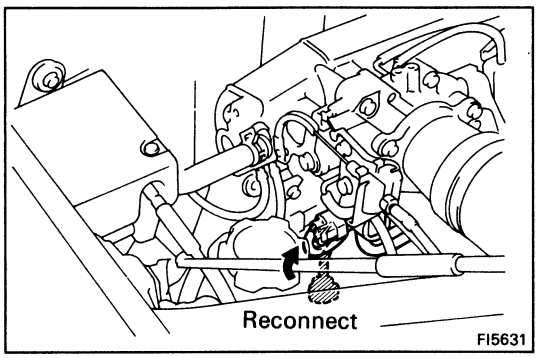

(d) Reconnect the ISC valve connector.

(e) Check that they return to the idle speed.

Idle speed: 800 ± 50 rpm

If the rpm operation is not as specified, check the ISC valve, wiring and ECU.

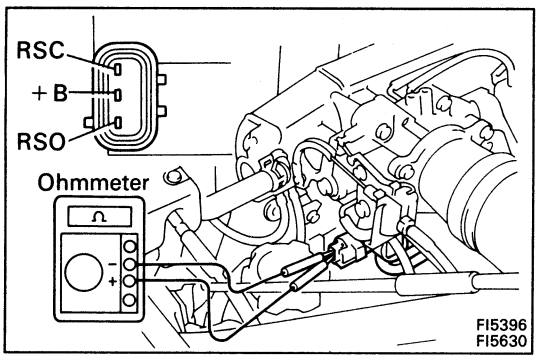

2. INSPECT ISC VALVE RESISTANCE

(a) Disconnect the ISC valve connector.

(b) Using an ohmmeter, measure the resistance between terminal +B and other terminals (RSC, RSO).

Resistance: 17.7 – 23.9 Ω

If resistance is not as specified, replace the ISC valve.

(c) Reconnect the ISC valve connector.

REMOVAL OF ISC VALVE

1. REMOVE THROTTLE BODY
(See steps 1 to 11 on pages FI-135 and 136)

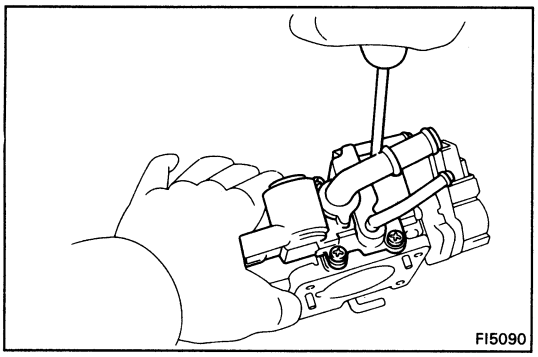

2. REMOVE ISC VALVE

Remove the four screws, ISC valve and gasket.

INSPECTION OF ISC VALVE

INSPECT ISC VALVE OPERATION

(a) Connect the positive (+) lead from the battery to terminal +B and negative (–) lead to terminal RSC, and check that the valve is closed.

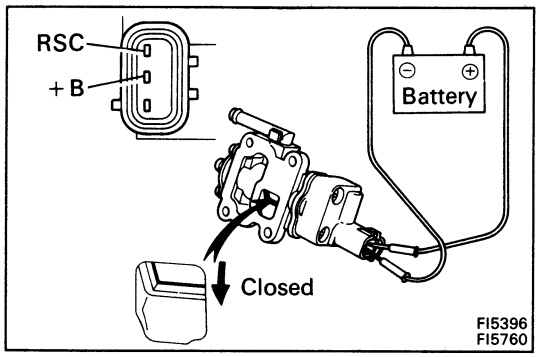

(b) Connect the positive (+) lead from the battery to terminal +B and negative (–) lead to terminal RSO, and check that the valve is open.

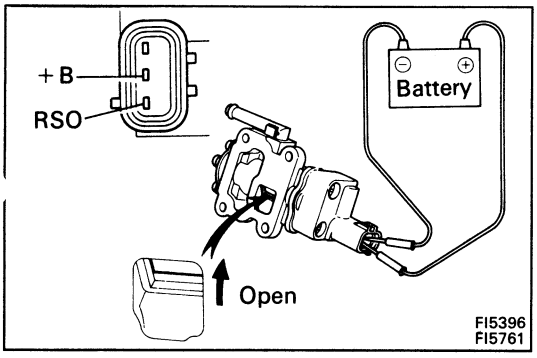

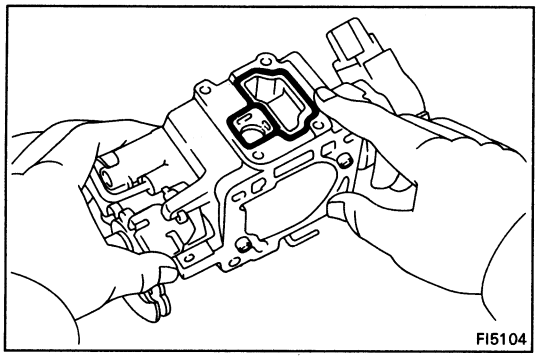

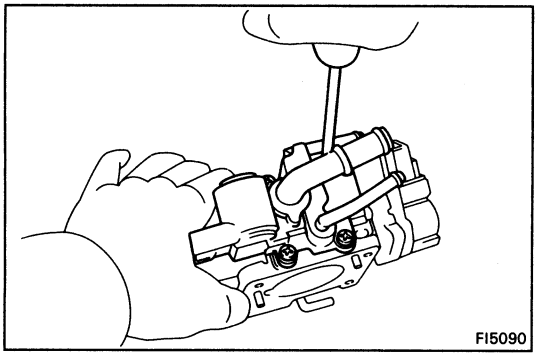

INSTALLATION OF ISC VALVE

1. INSTALL ISC VALVE

(a) Place a new gasket on the throttle body.

(b) Install the ISC valve with the four screws.

2. INSTALL THROTTLE BODY

(See steps 2 to 12 on pages FI-138 and 139)

Idle Speed Control (ISC) Valve (5S-FE)

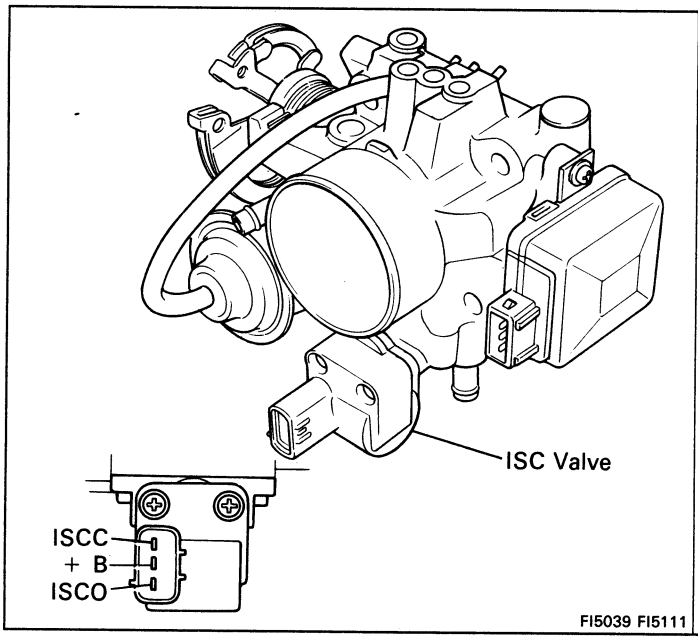

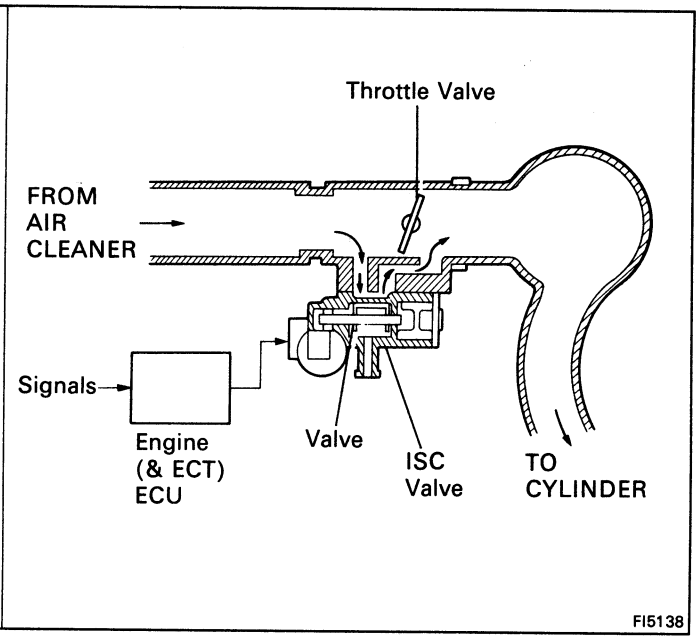

ON-VEHICLE INSPECTION

1. INSPECT ISC VALVE OPERATION

(a) Initial conditions:

- Engine at normal operating temperature
- Idle speed set correctly
- Transmission in neutral range

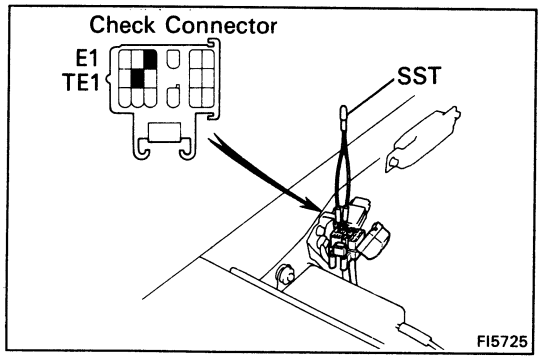

(b) Using SST, connect terminals TE1 and E1 of the check connector.

SST 09843-18020

(c) After engine rpm are kept at 1,000 – 1,300 rpm for 5 seconds, check that they return to idle speed.

If the rpm operation is not as specified, check the ISC valve, wiring and ECU.

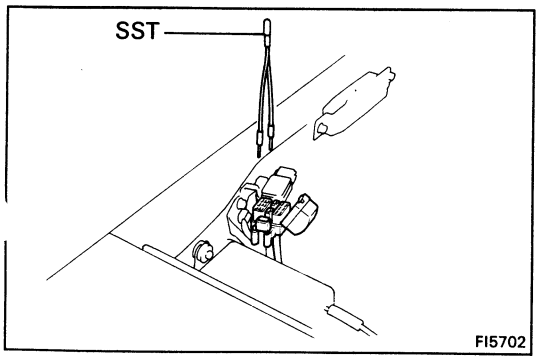

(d) Remove SST.

SST 09843-18020

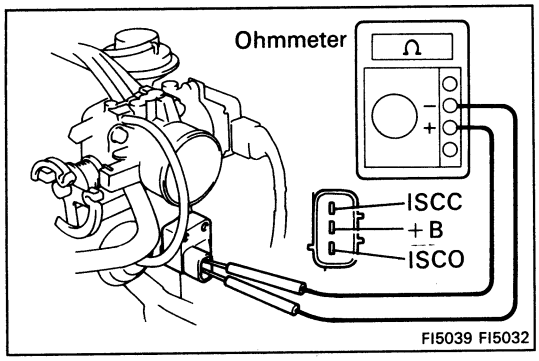

2. INSPECT ISC VALVE RESISTANCE

(a) Disconnect the ISC valve connector.

(b) Using an ohmmeter, measure the resistance between terminal +B and other terminals (ISCC, ISCO).

Resistance: 19.3 – 22.3 Ω

If resistance is not as specified, replace the ISC valve.

(c) Reconnect the ISC valve connector.

REMOVAL OF ISC VALVE

1. REMOVE THROTTLE BODY
(See steps 1 to 10 on page FI-143)

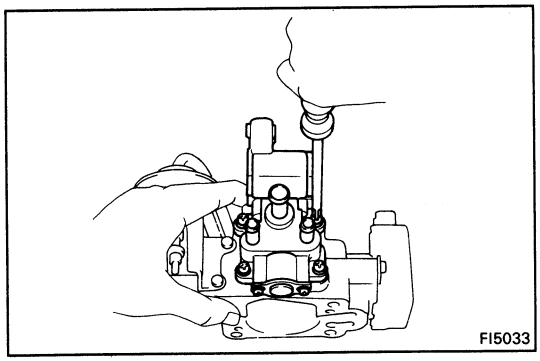

2. REMOVE ISC VALVE

Remove the four screws, ISC valve and gasket.

INSPECTION OF ISC VALVE

INSPECT ISC VALVE OPERATION

(a) Connect the positive (+) lead from the battery to terminal +B and negative (–) lead to terminal ISCC, and check that the valve is closed.

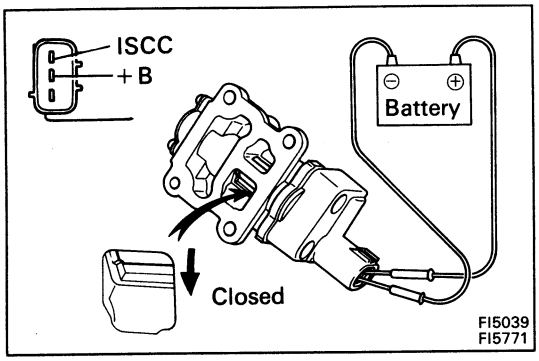

(b) Connect the positive (+) lead from the battery to terminal +B and negative (–) lead to terminal ISCO, and check that the valve is open.

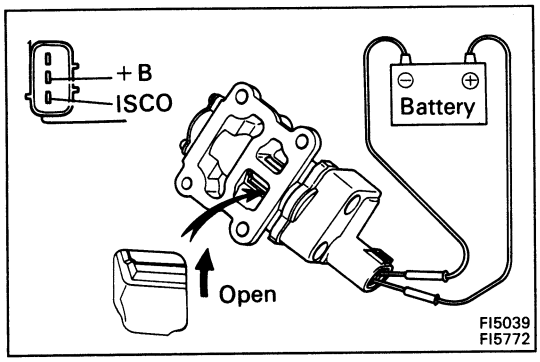

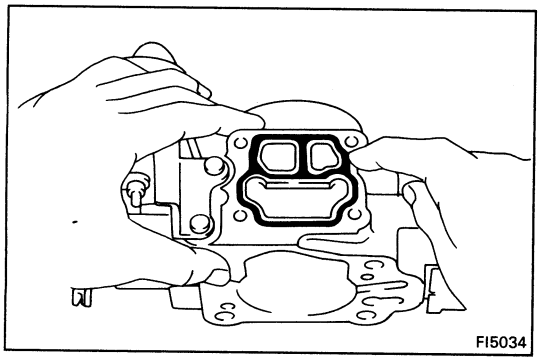

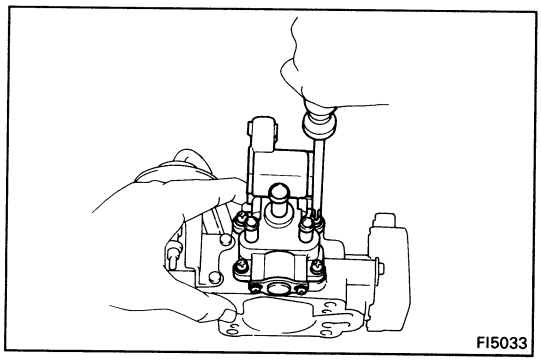

INSTALLATION OF ISC VALVE

1. INSTALL ISC VALVE

(a) Place a new gasket on the throttle body.

(b) Install the ISC valve with the four screws.

2. INSTALL THROTTLE BODY

(See steps 2 to 11 on pages FI-146 and 147)

ELECTRONIC CONTROL SYSTEM
Location of Electronic Control Parts

3S-GTE

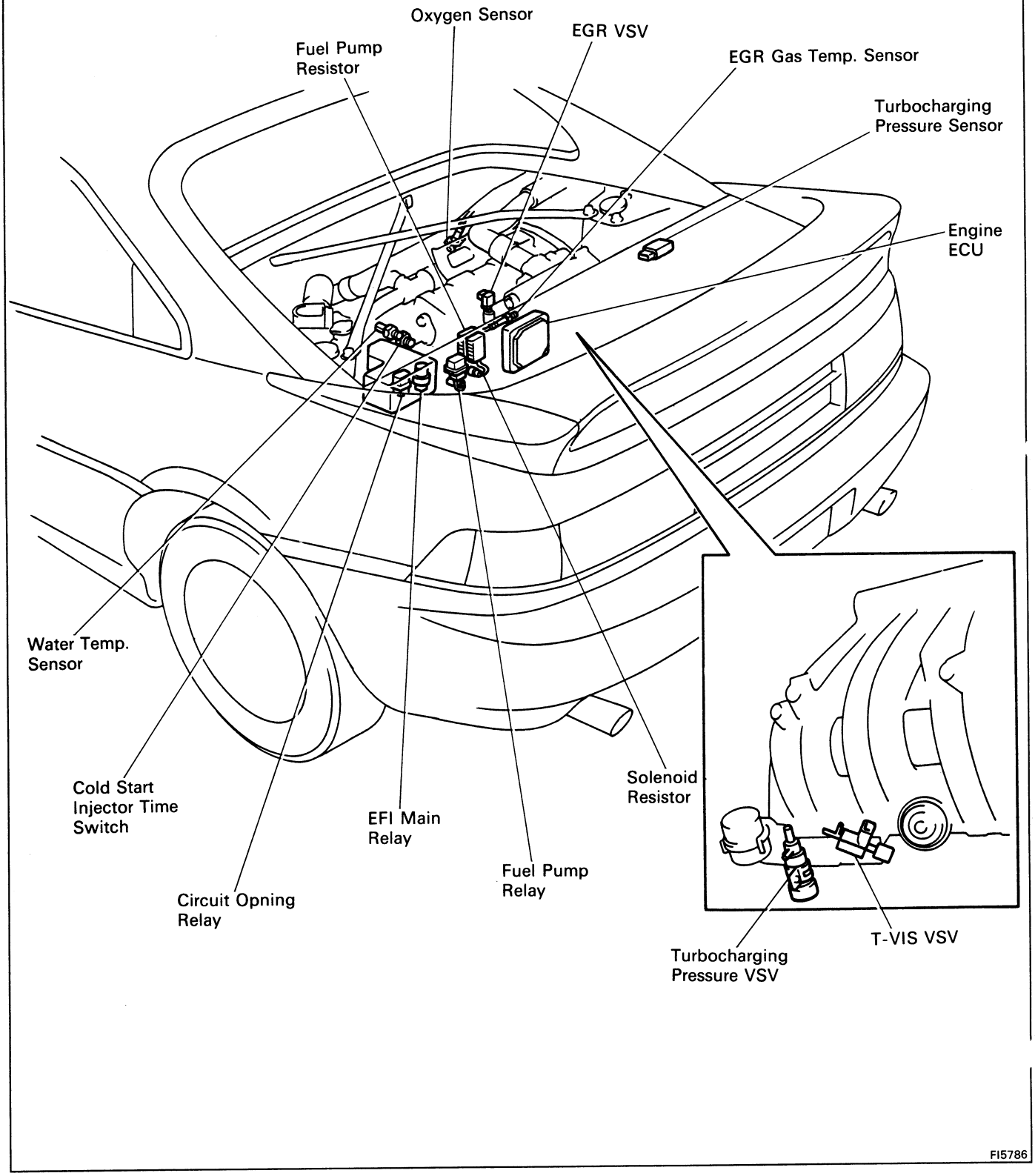

Location of Electronic Control Parts (Cont'd)

5S-FE

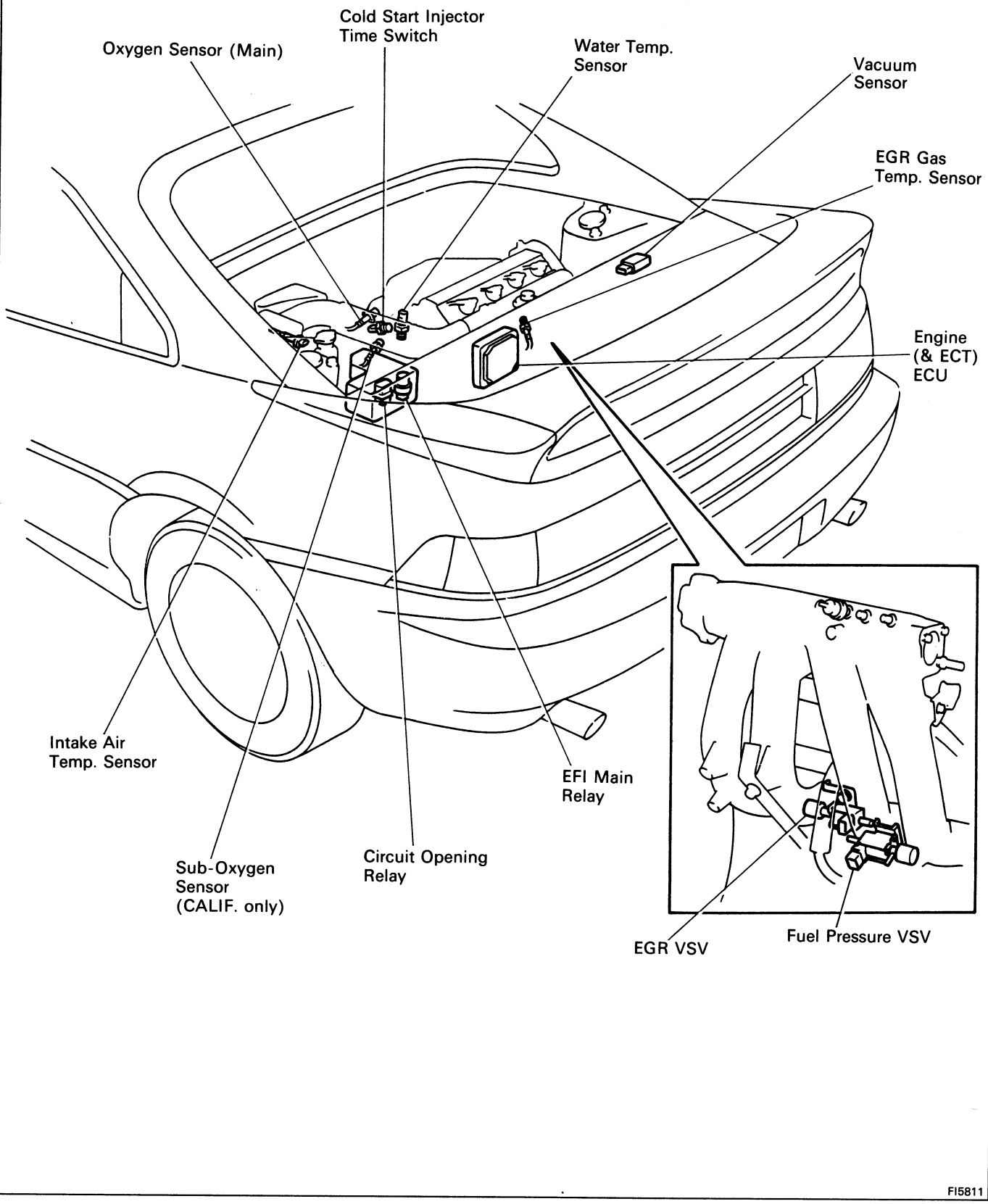

FI5811

EFI Main Relay

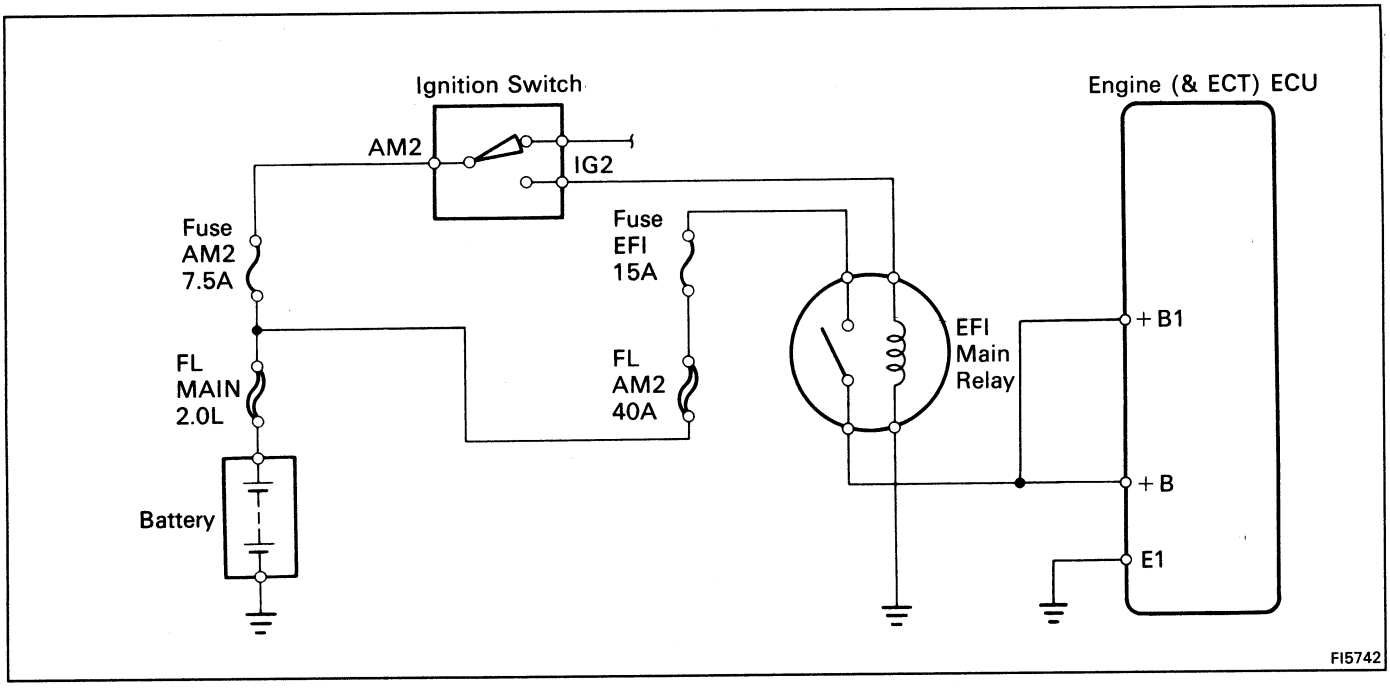

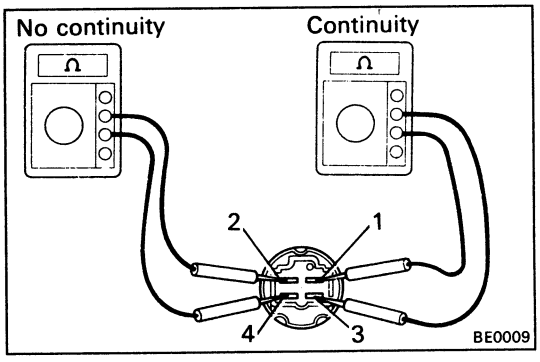

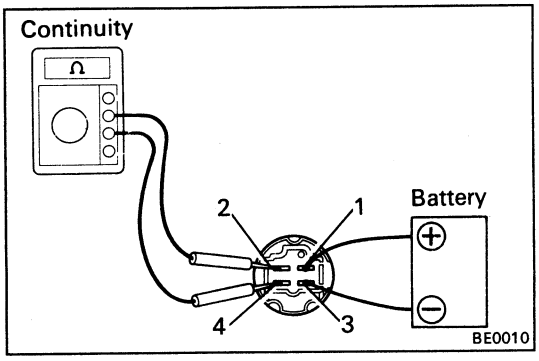

INSPECTION OF EFI MAIN RELAY

1. INSPECT RELAY CONTINUITY

(a) Using an ohmmeter, check that there is continuity between terminals 1 and 3.

(b) Check that there is no continuity between terminals 2 and 4.

If continuity is not as specified, replace the relay.

2. INSPECT RELAY OPERATION

(a) Apply battery voltage across terminals 1 and 3.

(b) Using an ohmmeter, check that there is continuity between terminals 2 and 4.

If operation is not as specified, replace the relay.

Circuit Opening Relay

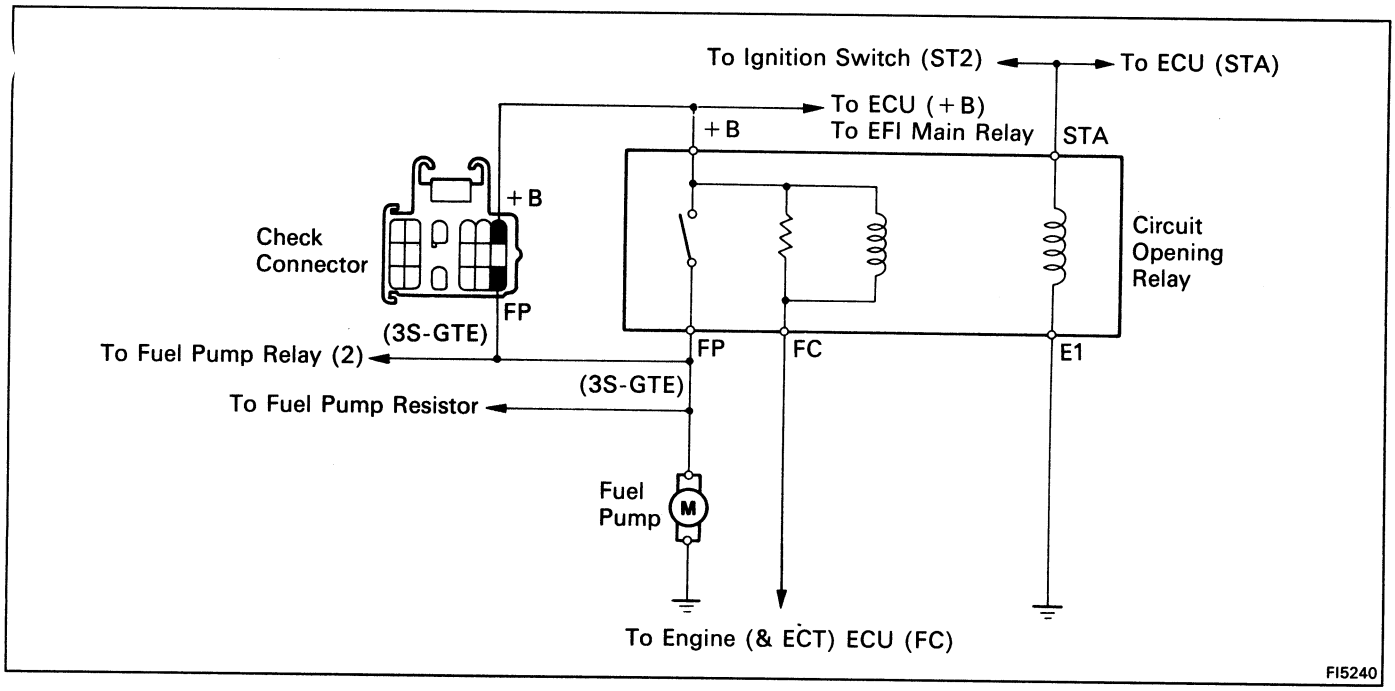

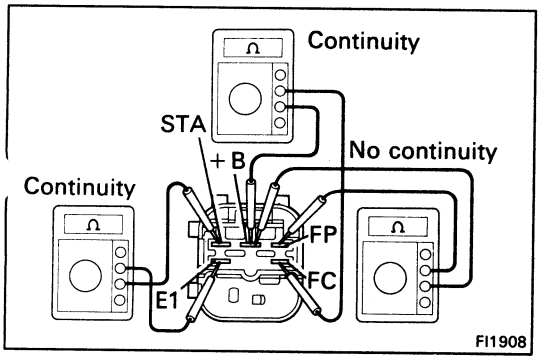

INSPECTION OF CIRCUIT OPENING RELAY

1. INSPECT RELAY CONTINUITY

(a) Using an ohmmeter, check that there is continuity between terminals STA and E1.

(b) Check that there is continuity between terminals +B and FC.

(c) Check that there is no continuity between terminals +B and FP.

If continuity is not as specified, replace the relay.

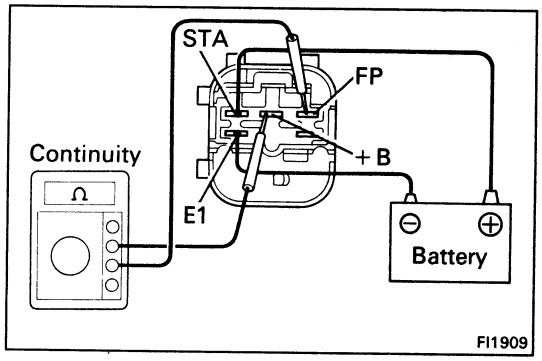

2. INSPECT RELAY OPERATION

(a) Apply battery voltage across terminals STA and E1.

(b) Using an ohmmeter, check that there is continuity between terminals +B and FP.

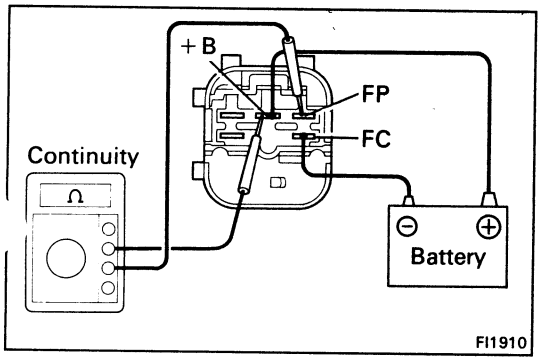

(c) Apply battery voltage across terminals +B and FC.

(d) Check that there is continuity between terminals +B and FP.

If operation is not as specified, replace the relay.

Cold Start Injector Time Switch

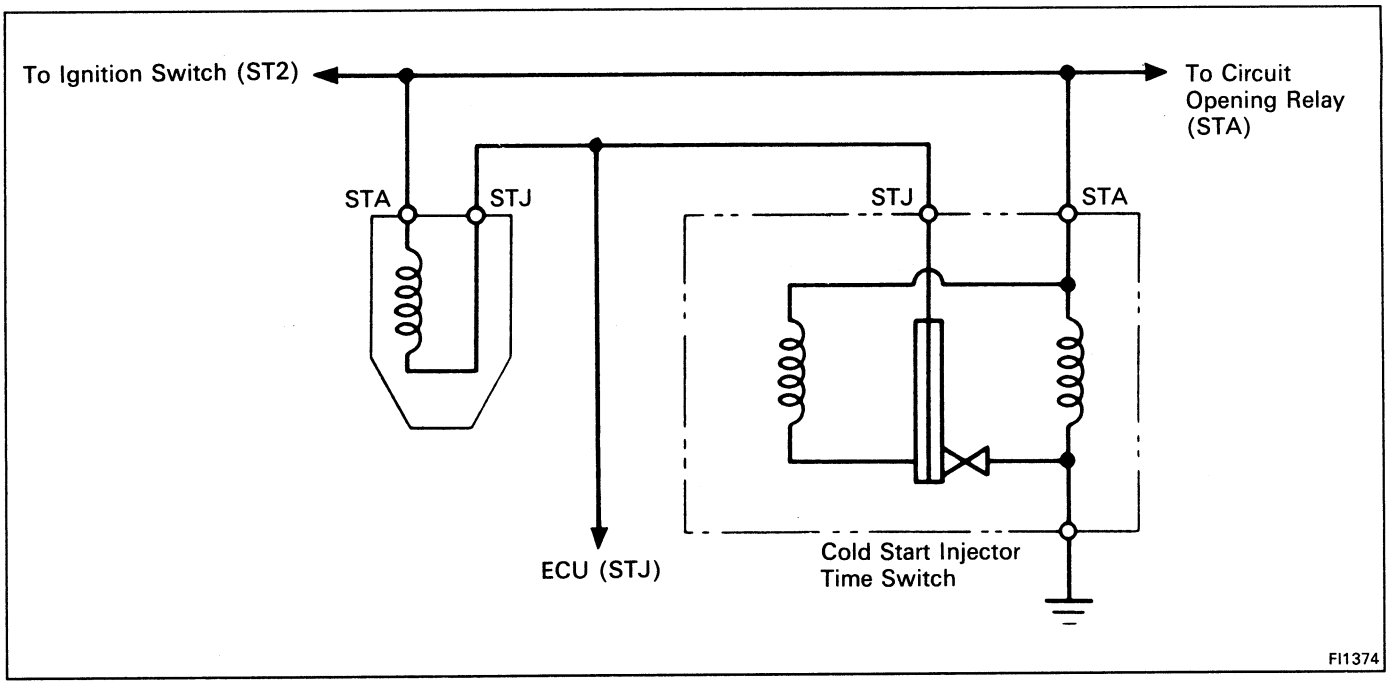

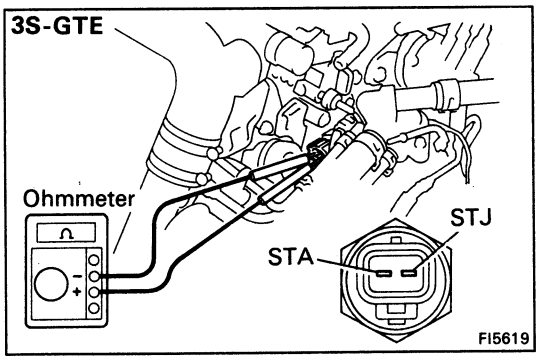

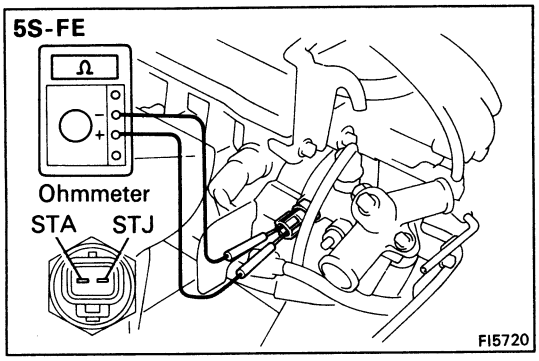

INSPECTION OF COLD START INJECTOR TIME SWITCH

INSPECT COLD START INJECTOR TIME SWITCH

Using an ohmmeter, measure the resistance between each terminal.

Resistance:

3S-GTE

STA – STJ	**30 – 50 Ω**
	below 10°C (50°F)
	70 – 90 Ω
	above 25°C (77°F)
STA – Ground	**30 – 90 Ω**

5S-FE

STA – STJ	**20 – 40 Ω**
	below 30°C (86°F)
	40 – 60 Ω
	above 40°C (104°F)
STA – Ground	**20 – 80 Ω**

If the resistance is not as specified, replace the switch.

Solenoid Resistor (3S-GTE)

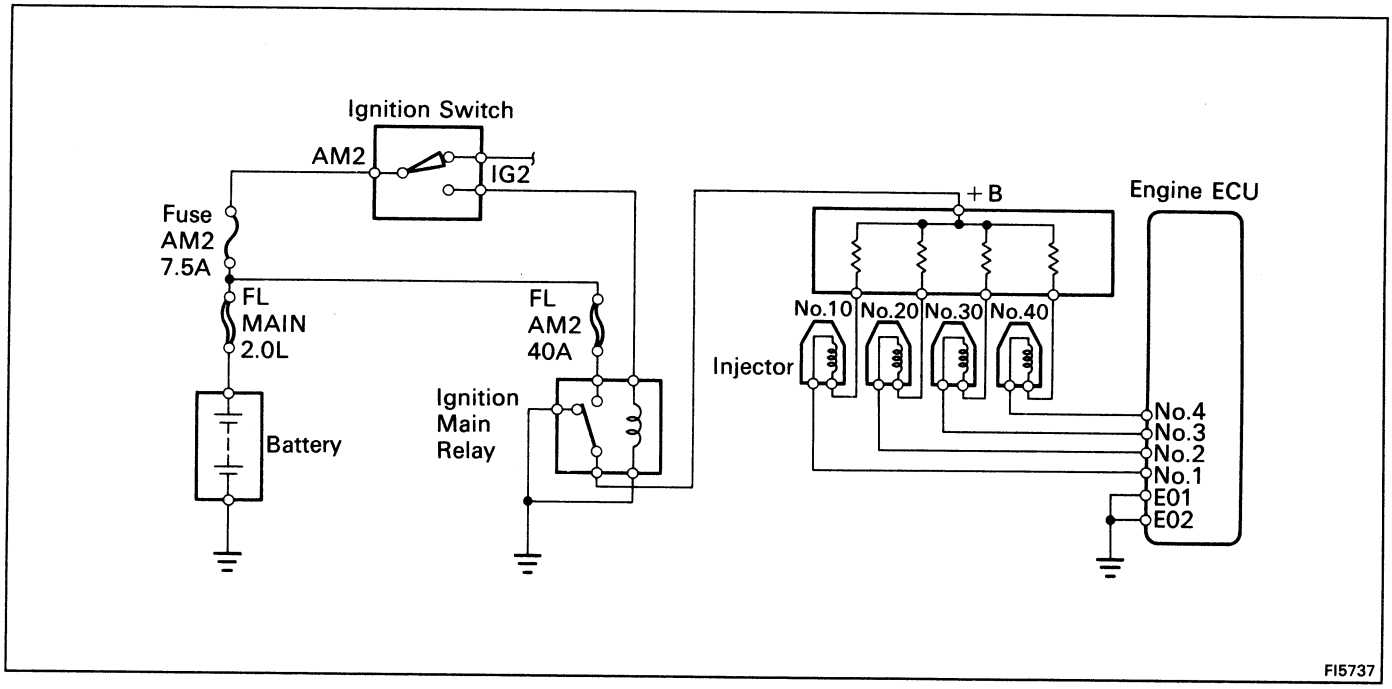

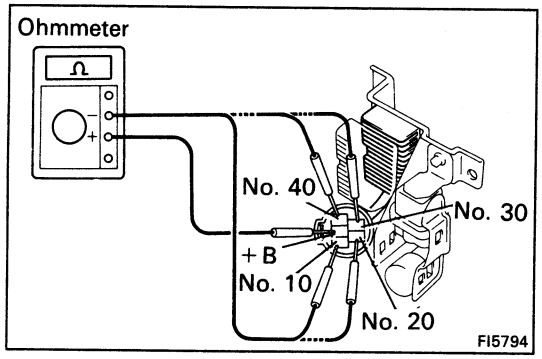

INSPECTION OF SOLENOID RESISTOR

INSPECT SOLENOID RESISTOR

Using an ohmmeter, measure the resistance between terminal +B and other terminals.

Resistance: 4 – 6 Ω

If the resistance is not as specified, replace the resistor.

Fuel Pump Relay and Resistor (3S-GTE)

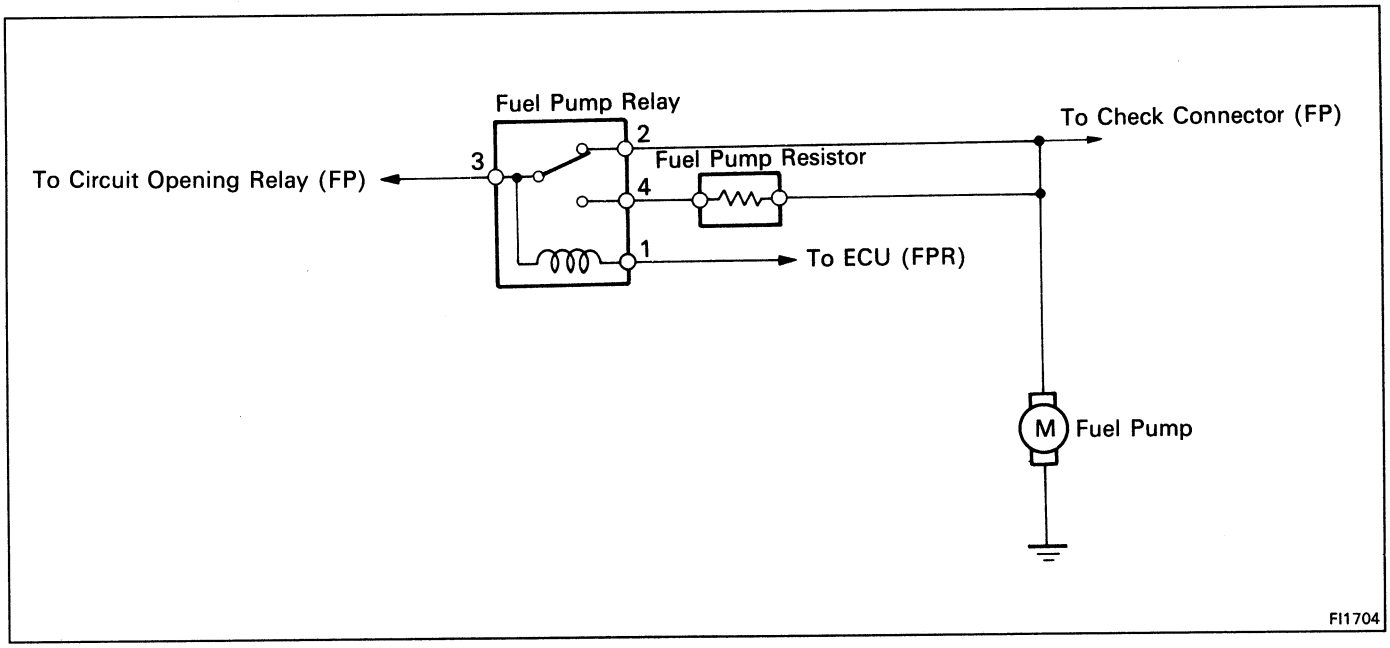

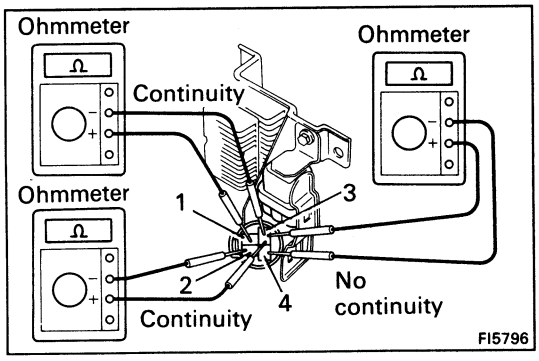

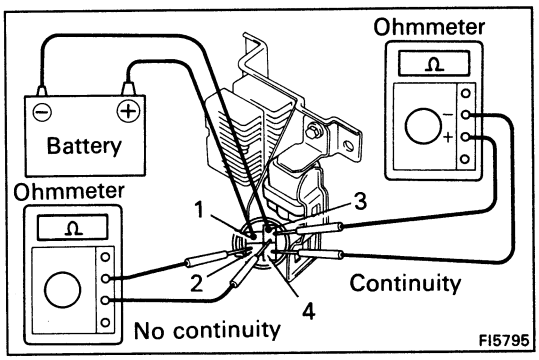

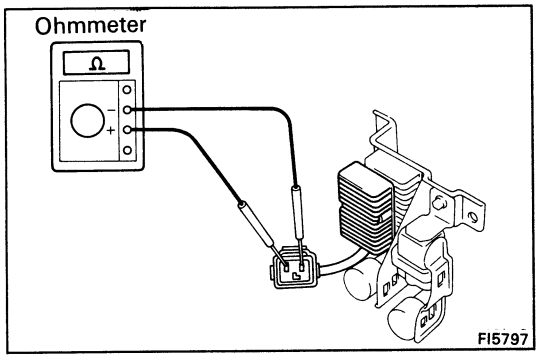

INSPECTION OF FUEL PUMP RELAY AND RESISTOR

1. INSPECT FUEL PUMP RELAY

A. Inspect relay continuity

(a) Using an ohmmeter, check that there is continuity between terminals 1 and 3.

(b) Check that there is continuity between terminals 2 and 3.

(c) Check that there is no continuity between terminals 3 and 4.

If continuity is not as specified, replace the relay.

B. Inspect relay operation

(a) Apply battery voltage across terminals 1 and 3.

(b) Using an ohmmeter, check that there is no continuity between terminals 2 and 3.

(c) Check that there is continuity between terminals 3 and 4.

If operation is not as specified, replace the relay.

2. INSPECT FUEL PUMP RESISTOR

Using an ohmmeter, measure the resistance between the terminals.

Resistance: Approx. 0.73 Ω

If the resistance is not as specified, replace the resistor.

Fuel Pressure VSV (5S-FE)

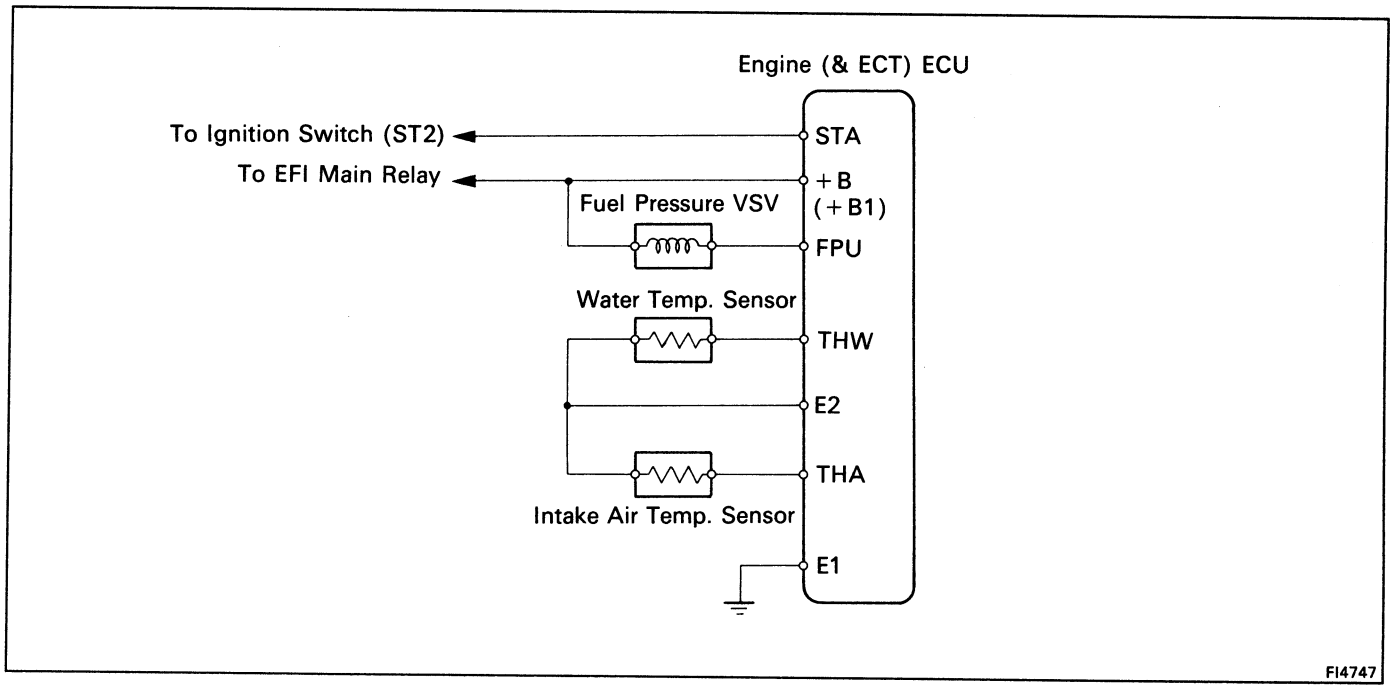

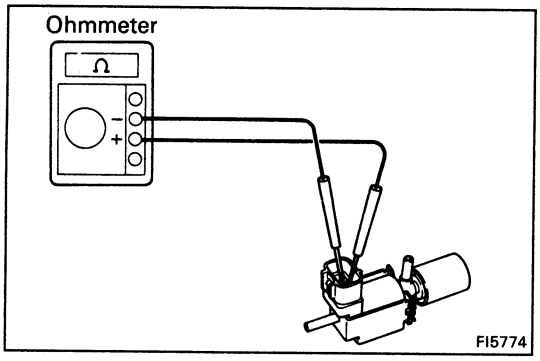

INSPECTION OF FUEL PRESSURE VSV

1. INSPECT VSV FOR OPEN CIRCUIT

Using an ohmmeter, check that there is continuity between the terminals.

Resistance (Cold): 33 – 39 Ω

If there is no continuity, replace the VSV.

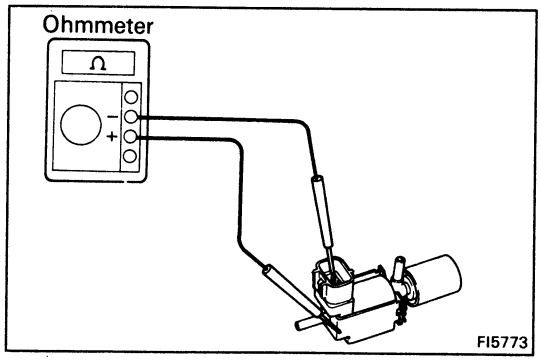

2. INSPECT VSV FOR GROUND

Using an ohmmeter, check that there is no continuity between each terminal and the body.

If there is continuity, replace the VSV.

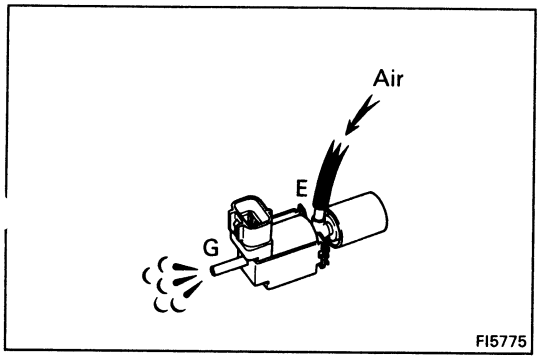

3. INSPECT VSV OPERATION

(a) Check that air flows from ports E to G.

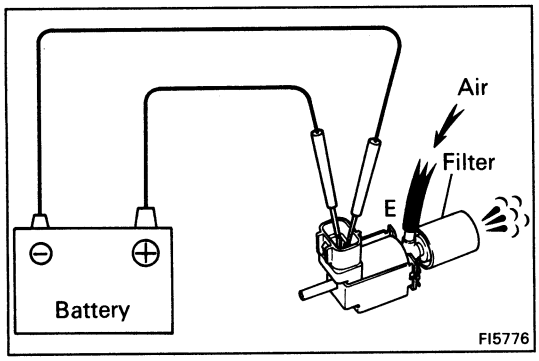

(b) Apply battery voltage across the terminals.

(c) Check that air flows from ports E to the filter.

If operation is not as specified, replace the VSV.

T-VIS VSV (3S-GTE)

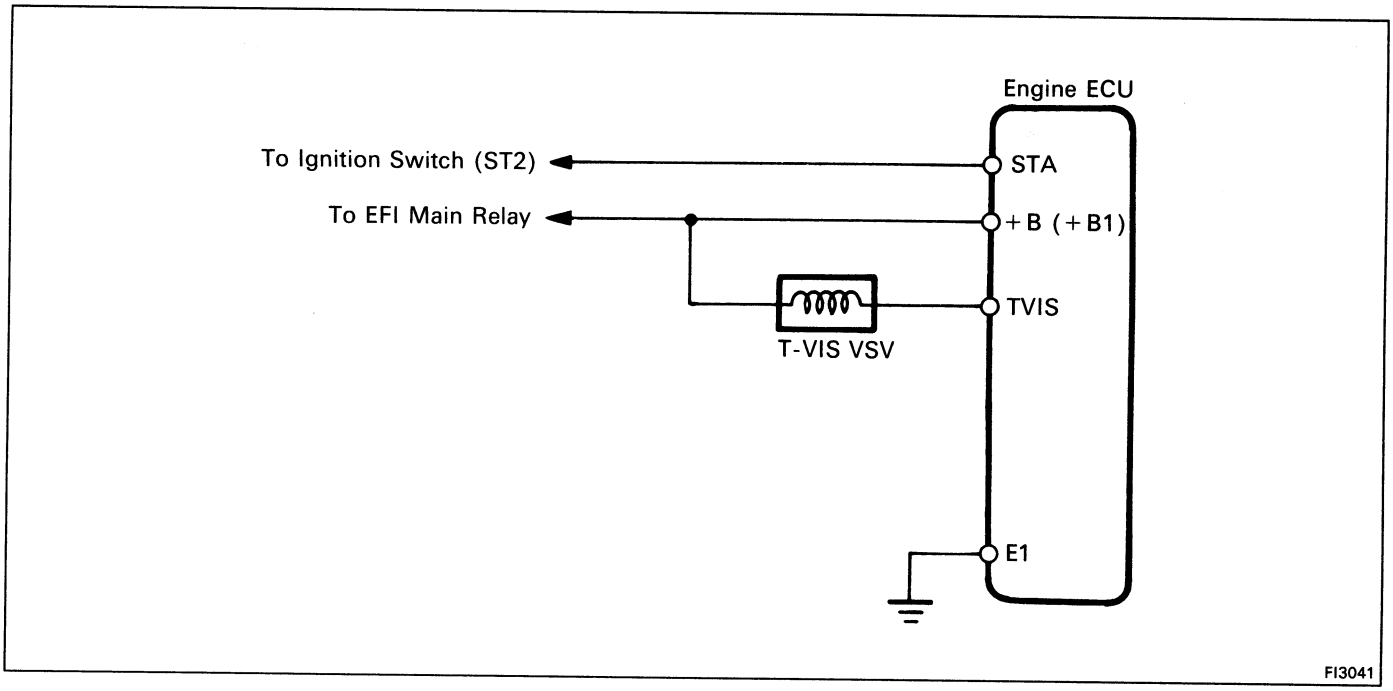

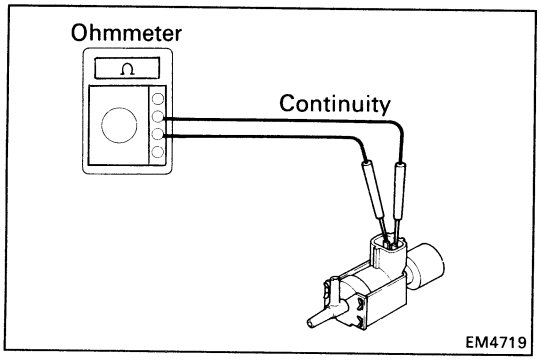

INSPECTION OF T-VIS VSV

1. **INSPECT VSV FOR OPEN CIRCUIT**

Using an ohmmeter, check that there is continuity between the terminals.

Resistance (Cold): 33 – 39 Ω

If there is no continuity, replace the VSV.

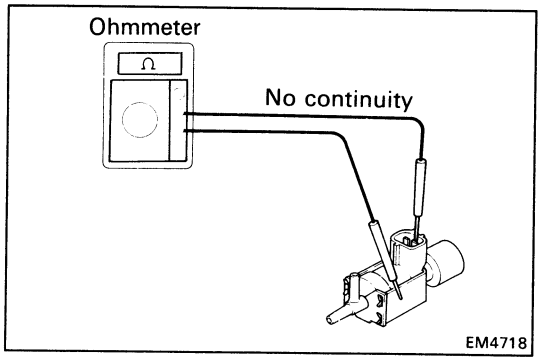

2. **INSPECT VSV FOR GROUND**

Using an ohmmeter, check that there is no continuity between each terminal and the body.

If there is continuity, replace the VSV.

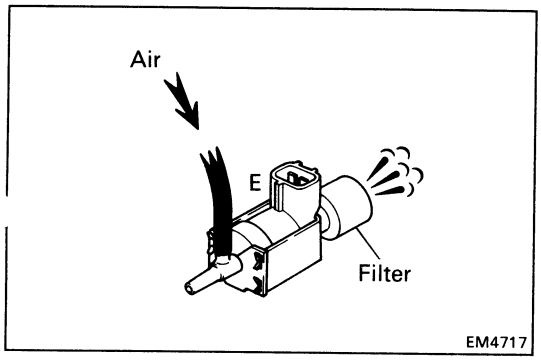

3. **INSPECT VSV OPERATION**

(a) Check that air flows from port E to the filter.

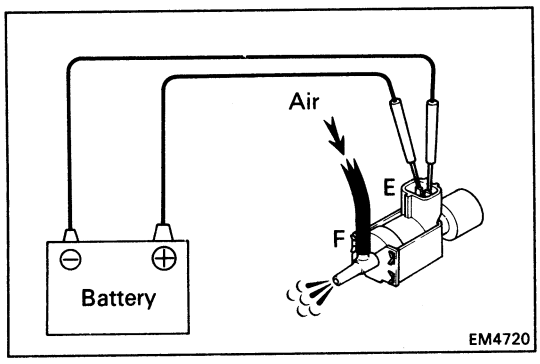

(b) Apply battery voltage across the terminals.
(c) Check that air flows from ports E to F.

If operation is not as specified, replace the VSV.

Turbocharging Pressure VSV (3S-GTE)

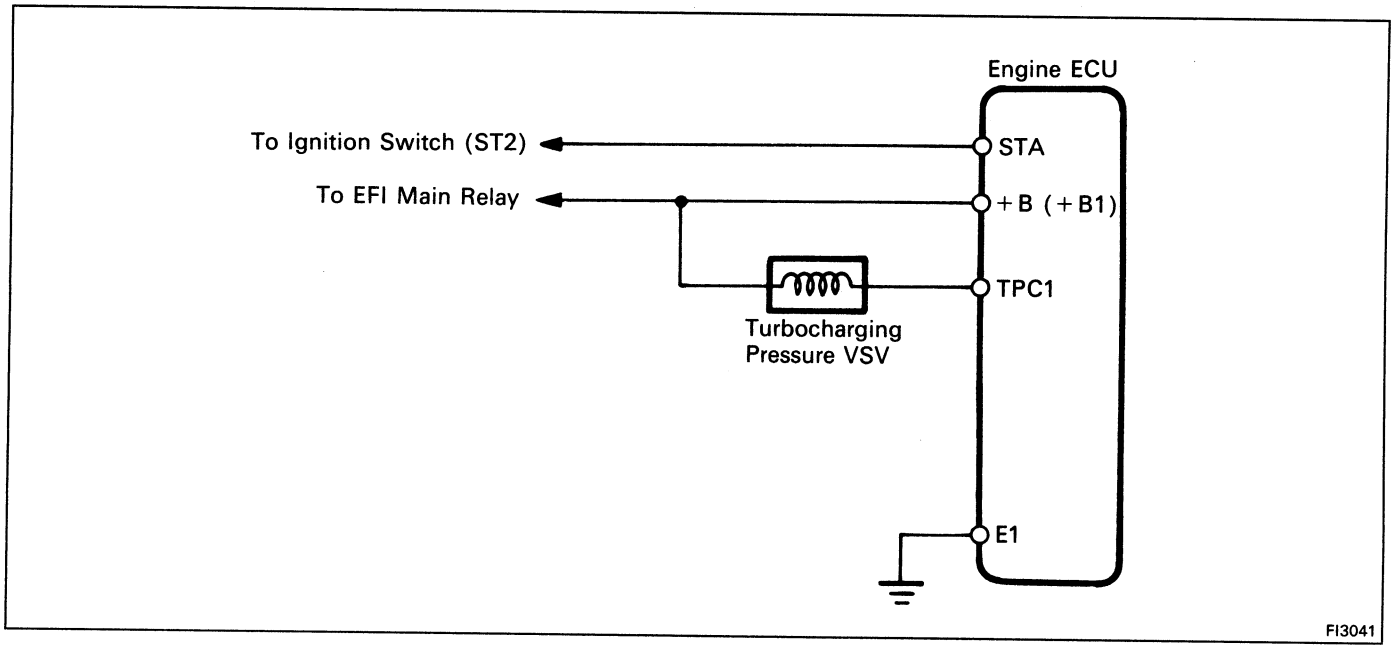

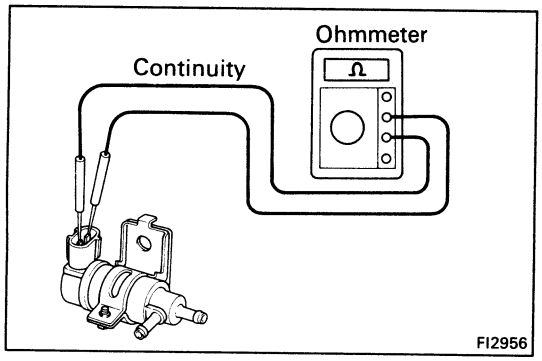

INSPECTION OF TURBOCHARGING PRESSURE VSV

1. INSPECT VSV FOR OPEN CIRCUIT

Using an ohmmeter, check that there is continuity between the terminals.

Resistance (Cold): 24 – 30 Ω

If there is no continuity, replace the VSV.

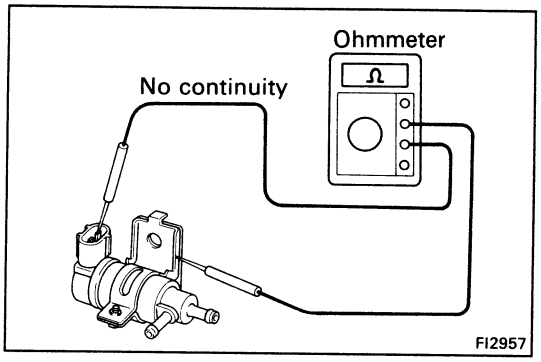

2. INSPECT VSV FOR GROUND

Using an ohmmeter, check that there is no continuity between each terminal and the body.

If there is continuity, replace the VSV.

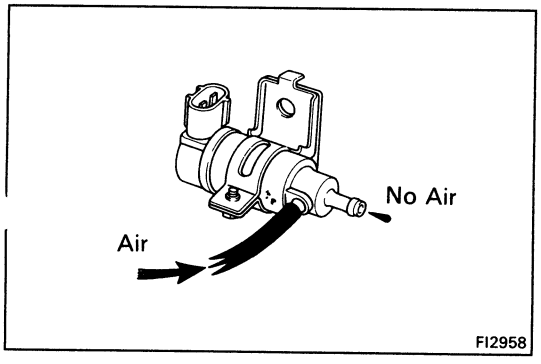

3. INSPECT VSV OPERATION

(a) Check that air does not flow from ports E to F.

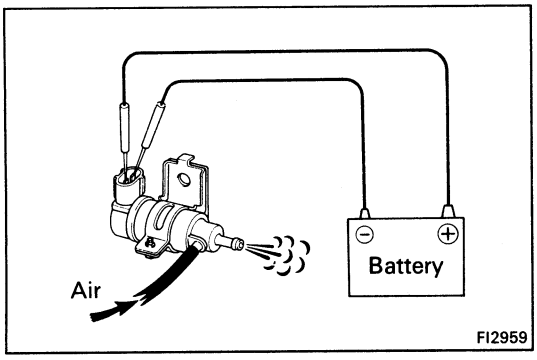

(b) Apply battery voltage across the terminals.

(c) Check that air flows from ports E to F.

If operation is not as specified, replace the VSV.

EGR VSV

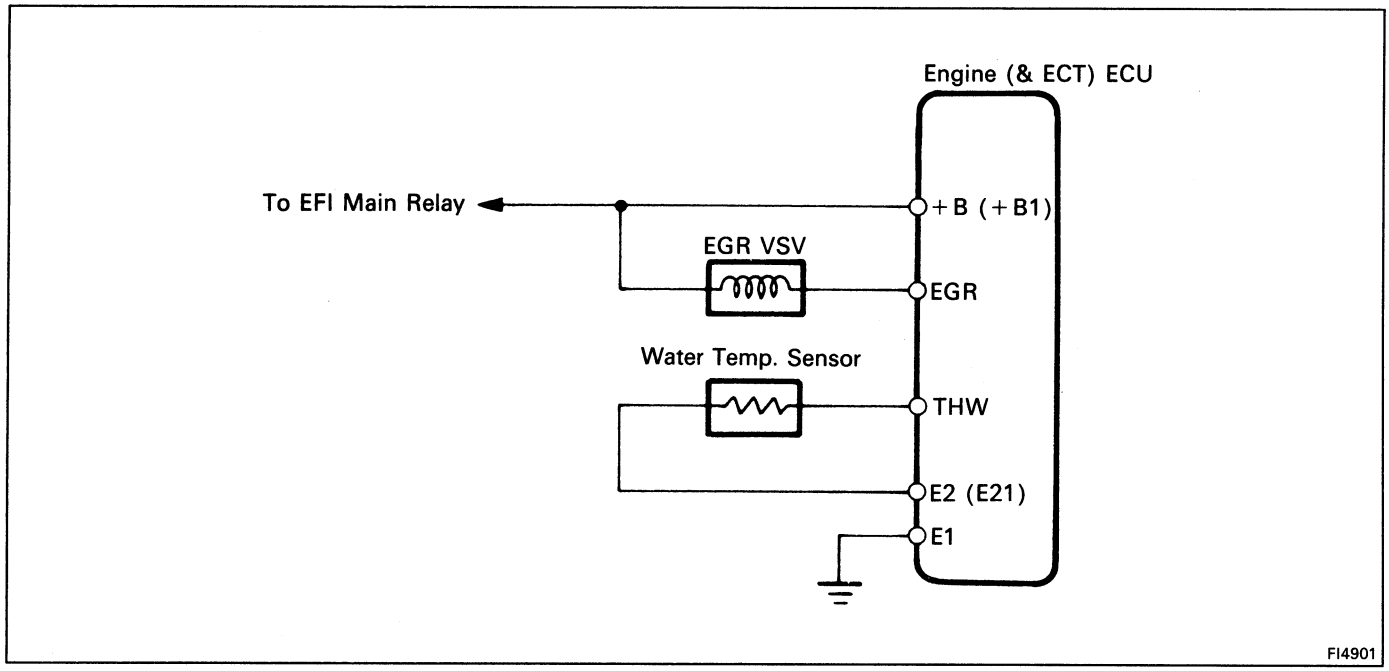

INSPECTION OF EGR VSV

3S-GTE (See page EC-10)
5S-FE (See page EC-24)

Water Temperature Sensor

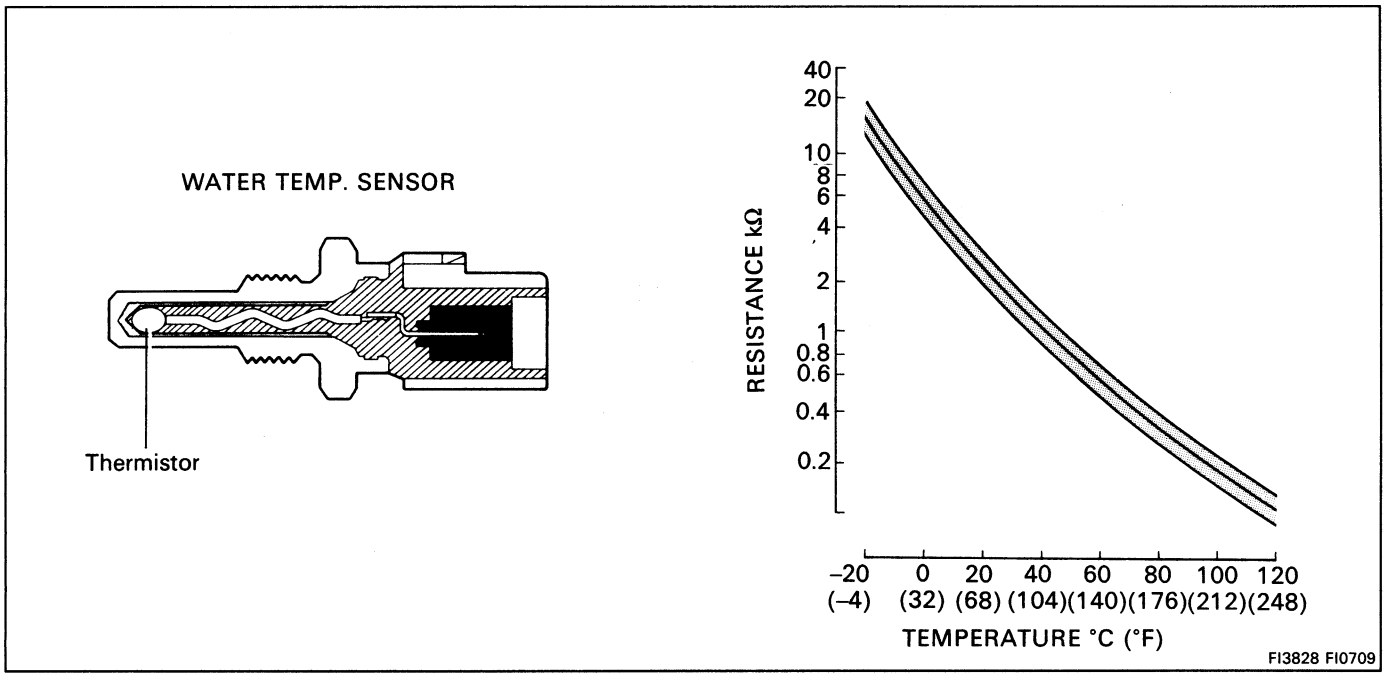

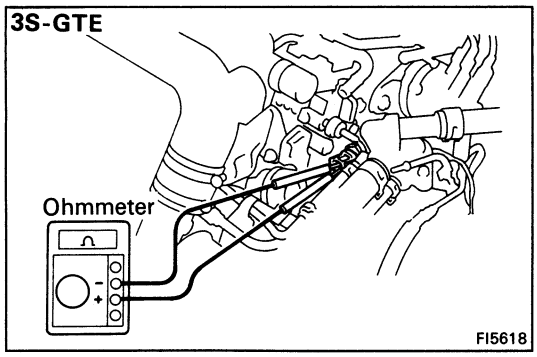

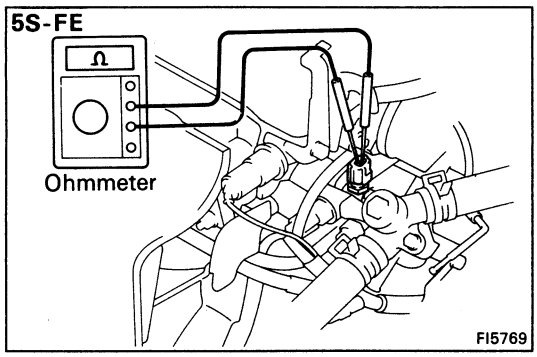

INSPECTION OF WATER TEMPERATURE SENSOR

INSPECT WATER TEMPERATURE SENSOR

Using an ohmmeter, measure the resistance between the terminals.

Resistance: Refer to the chart above

If the resistance is not as specified, replace the sensor.

Intake Air Temperature Sensor (5S-FE)

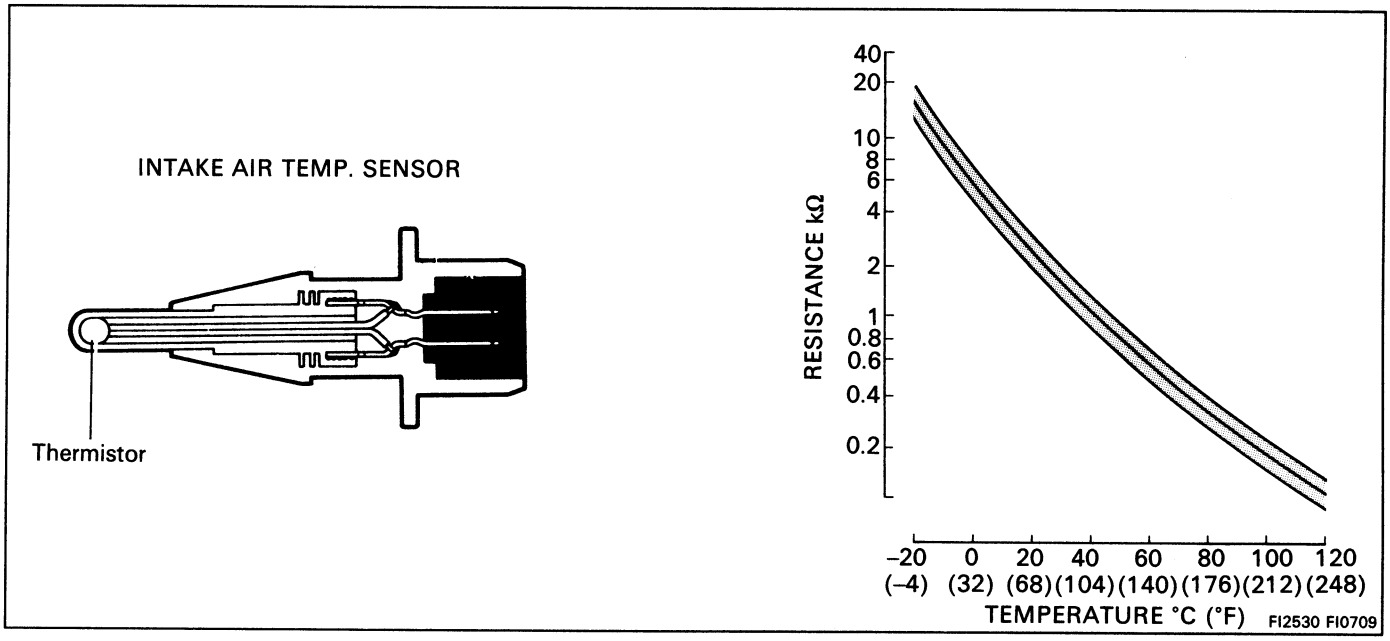

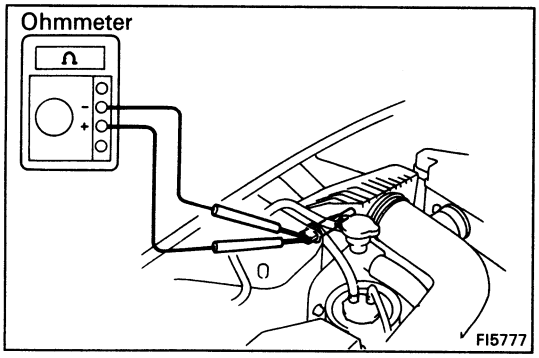

INSPECTION OF INTAKE AIR TEMPERATURE SENSOR

INSPECT RESISTANCE OF INTAKE AIR TEMPERATURE SENSOR

Using an ohmmeter, measure the resistance between the terminals.

Resistance: Refer to the chart above

If the resistance is not as specified, replace the sensor.

Vacuum Sensor (Manifold Absolute Pressure Sensor) (5S-FE)

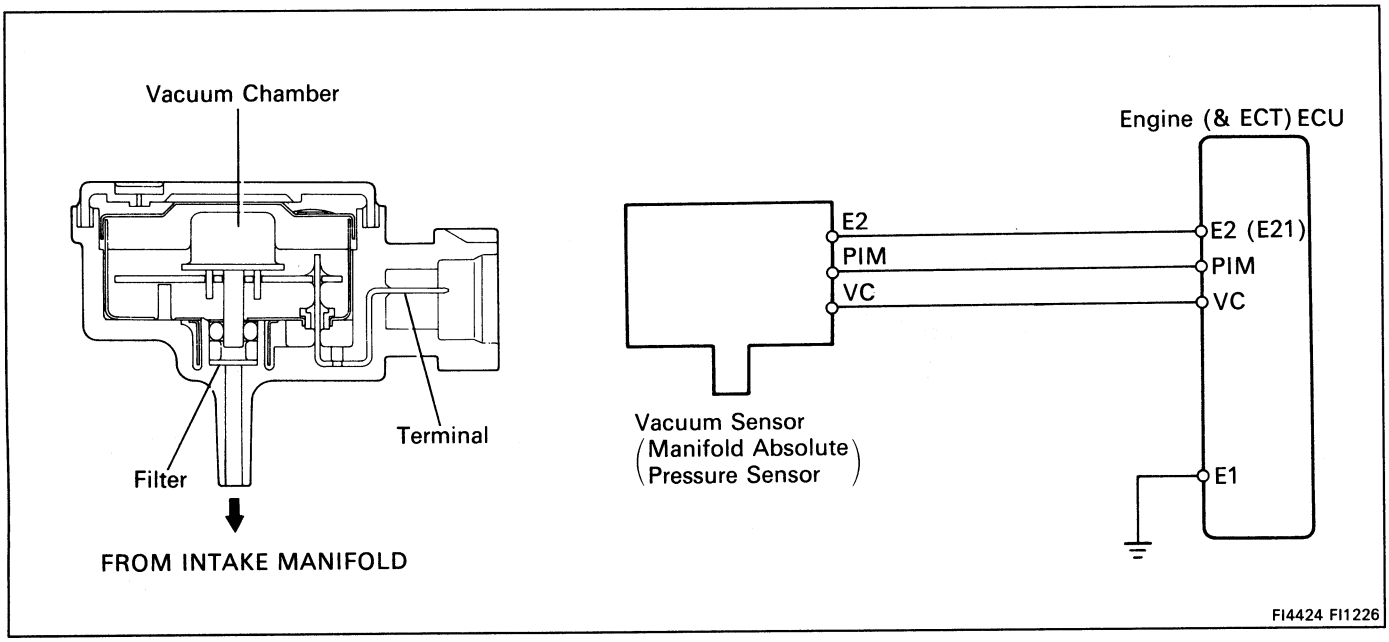

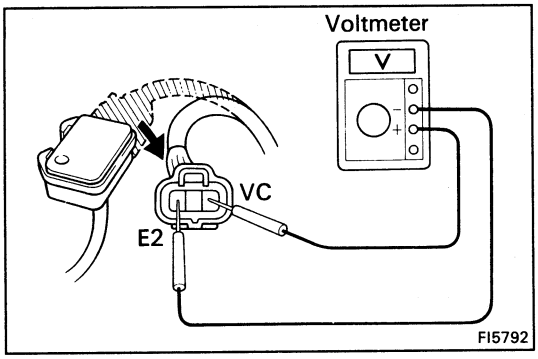

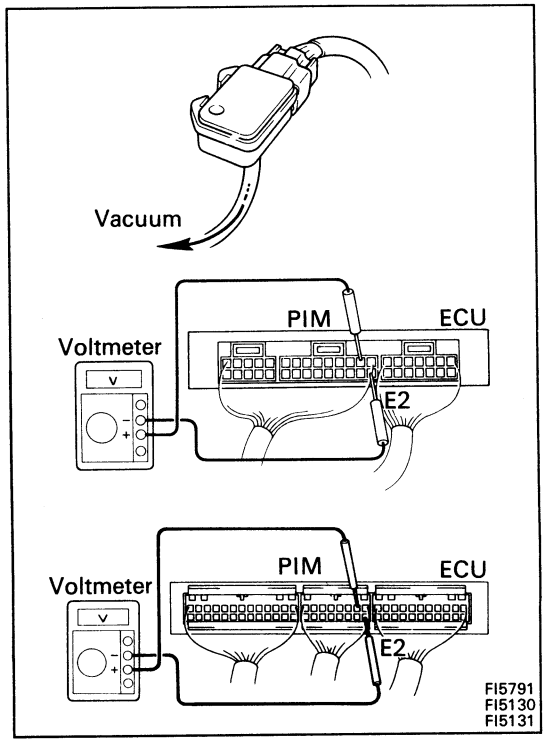

INSPECTION OF VACUUM SENSOR

1. INSPECT POWER SOURCE VOLTAGE OF VACUUM SENSOR

(a) Disconnect the vacuum sensor connector.

(b) Turn the ignition switch ON.

(c) Using a voltmeter, measure the voltage between terminals VC and E2.

Voltage: 4.5 – 5.5 V

(d) Disconnect the vacuum sensor connector.

2. INSPECT POWER OUTPUT OF VACUUM SENSOR

(a) Turn the ignition switch ON.

(b) Disconnect the vacuum hose of the intake manifold (chamber) side.

(c) Connect a voltmeter to terminals PIM and E2 of the ECU, and measure and record the output voltage under ambient atmospheric pressure.

(d) Apply vacuum to the vacuum sensor in 100 mmHg (3.94 in.Hg, 13.3 kPa) segments to 500 mmHg (19.69 in.Hg, 66.7 kPa).

(e) Measure voltage drop from step (c) above for each segment.

Voltage drop

Applied Vacuum mmHg in.Hg. kPa	100 3.94 13.3	200 7.87 26.7	300 11.81 40.0	400 15.75 53.3	500 19.69 66.7
Voltage drop V	0.3 – 0.5	0.7 – 0.9	1.1 – 1.3	1.5 – 1.7	1.9 – 2.1

Turbocharging Pressure Sensor (3S-GTE)

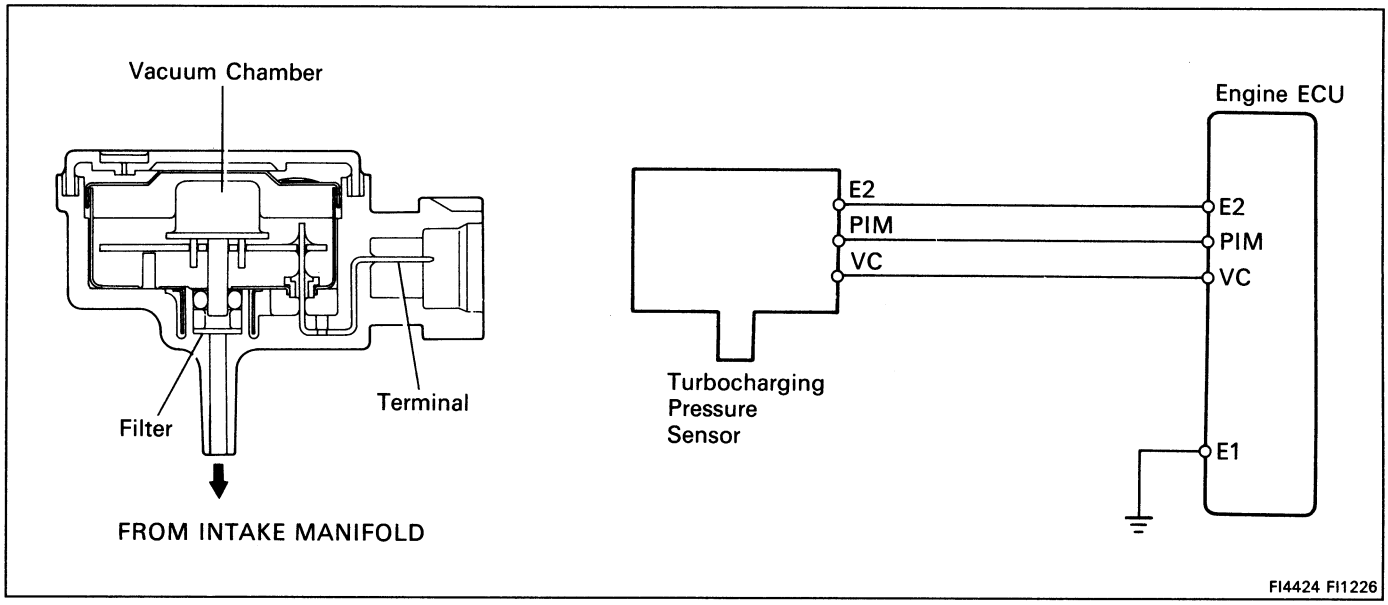

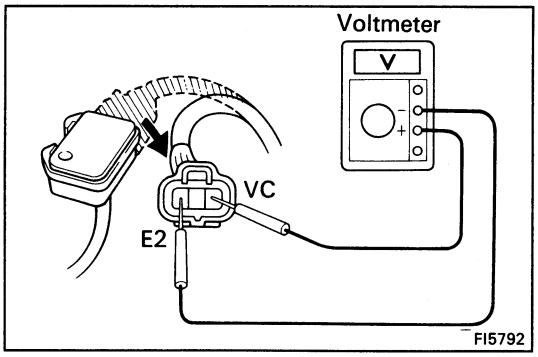

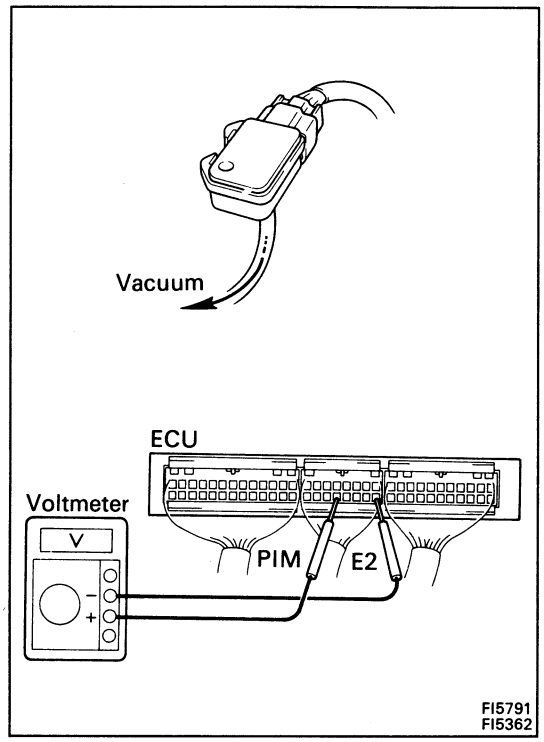

INSPECTION OF TURBOCHARGING PRESSURE SENSOR

1. INSPECT POWER SOURCE VOLTAGE OF TURBOCHARGING PRESSURE SENSOR

(a) Disconnect the pressure sensor connector.

(b) Turn the ignition switch ON.

(c) Using a voltmeter, measure the voltage between terminals VC and E2.

Voltage: 4.5 – 5.5 V

(d) Reconnect the pressure sensor connector.

2. INSPECT POWER OUTPUT OF TURBOCHARGING PRESSURE SENSOR

(a) Turn the ignition switch ON.

(b) Disconnect the vacuum hose of the intake manifold (chamber) side.

(c) Connect a voltmeter to terminals PIM and E2 of the ECU, and measure and record the output voltage under ambient atmospheric pressure.

(d) Apply vacuum to the pressure sensor in 100 mmHg (3.94 in.Hg, 13.3 kPa) segments to 500 mmHg (19.69 in.Hg, 66.7 kPa).

(e) Measure voltage drop from step (c) above for each segment.

Voltage drop

Applied Vacuum mmHg in.Hg. kPa	100 3.94 13.3	200 7.87 26.7	300 11.81 40.0	400 15.75 53.3	500 19.69 66.7
Voltage drop V	0.15 – 0.35	0.4 – 0.6	0.65 – 0.85	0.9 – 1.1	1.15 – 1.35

EGR Gas Temperature Sensor (3S-GTE and 5S-FE (CALIF. only))

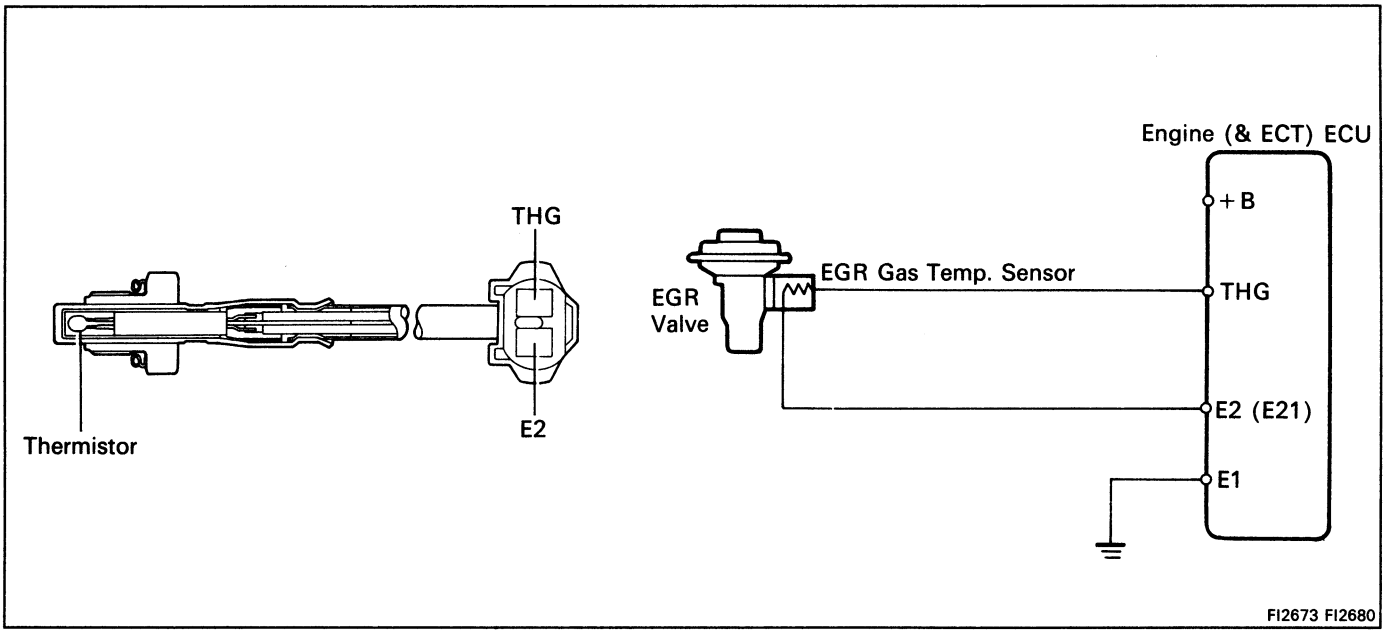

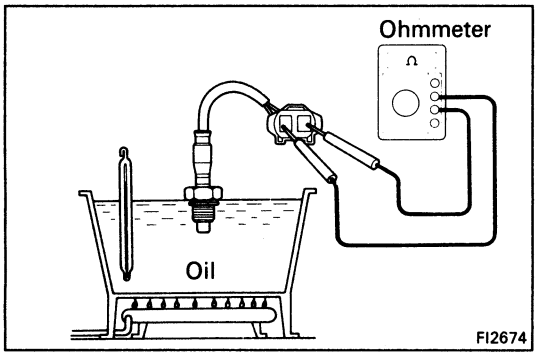

INSPECTION OF EGR GAS TEMPERATURE SENSOR

INSPECT EGR GAS TEMPERATURE SENSOR

Using an ohmmeter, measure the resistance between the terminals.

Resistance:

69.40 – 88.50 kΩ at 50°C (112°F)
11.89 – 14.37 kΩ at 100°C (212°F)
2.79 – 3.59 kΩ at 150°C (302°F)

If the resistance is not as specified, replace the sensor.

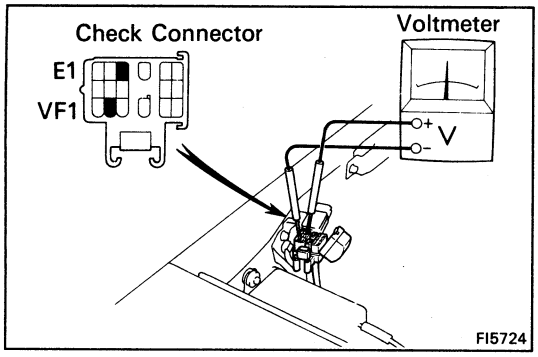

Oxygen Sensor (Main)

INSPECTION OF OXYGEN SENSOR

1. WARM UP ENGINE

Allow the engine to warm up to normal operating temperature.

2. INSPECT FEEDBACK VOLTAGE

Connect the positive (+) probe of a voltmeter to terminal VF1 of the check connector, and negative (–) probe to terminal E1. Perform the test as follows:

Warm up the oxygen sensor with the engine at 2,500 rpm for approx. 120 seconds.

Connect terminals TE1 and E1 of the check connector. And maintain engine speed at 2,500 rpm.

Replace the ECU.

Zero again

After replacing the oxygen sensor

Check the number of times the voltmeter needle fluctuates in 10 seconds.

Less than 8 times

8 times or more

Zero

Normal

Warm up the oxygen sensor with the engine at 2,500 rpm for approx. 120 seconds. And maintain engine at 2,500 rpm.

Check the number of times the voltmeter needle fluctuates in 10 seconds.

8 times or more

Zero

Less than 8 times

Disconnect terminals TE1 and E1 of the check connector. And maintain engine speed at 2,500 rpm.

Measure voltage between terminals VF1 and E1.

0 V

More then 0 V

Read and record diagnostic codes. (See page FI-28 or 30)

Normal code, code Nos. 21, 25 and 26

Malfunction code(s) (Ex. code Nos. 21, 25 and 26)

Repair the relevant diagnostic code.

① ② ③ ④

CONTINUED ON PAGE FI-174

CONTINUED FROM PAGE FI-173

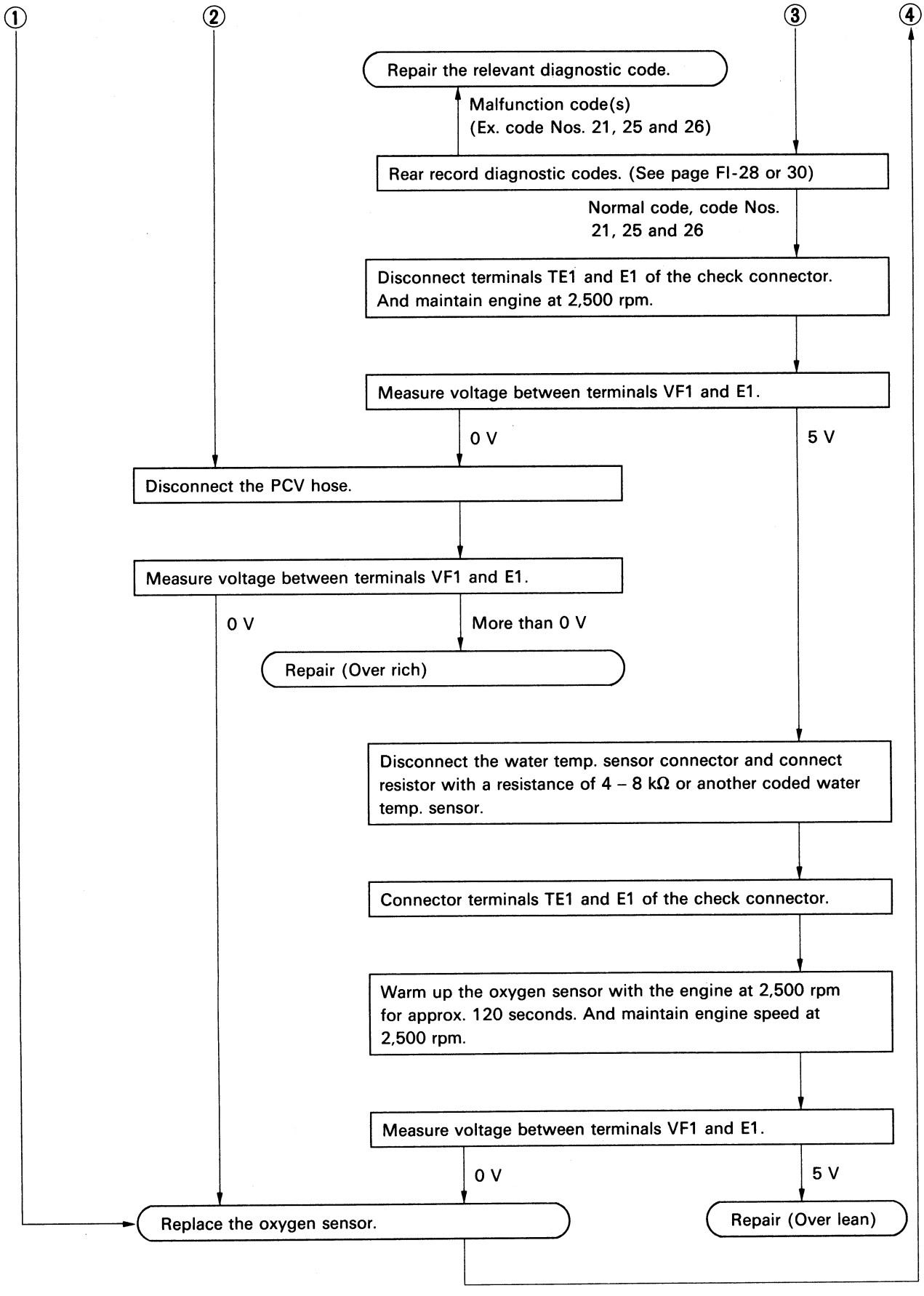

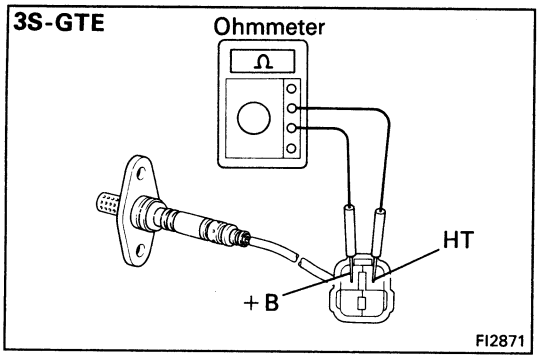

3. **(3S-GTE)**
INSPECT HEATER RESISTANCE OF OXYGEN SENSOR

Using an ohmmeter, measure the resistance between the terminals +B and HT.

Resistance: 5.1 – 6,3 kΩ at 20°C (68°F)

If the resistance is not as specified, replace the sensor.

Sub-Oxygen Sensor (5S-FE CALIF. only)

INSPECTION OF SUB-OXYGEN SENSOR

INSPECT SUB-OXYGEN SENSOR

HINT: Inspect it only when code No.27 is displayed.

(a) Cancel diagnostic code. (See page FI-26)

(b) Warm up the engine until it reaches normal operating temperature.

(c) (M/T)
Drive for 5 minutes or more between 80 km/h (50 mph) and 100 km/h in 4th or 5th gear.

(A/T)
Drive for 5 minutes or more between 80 km/h (50 mph) and 100 km/h (62 mph) in "D" range.

(d) Following the conditions in step (c), press fully on the accelerator pedal for 2 seconds or more.

HINT: Do not exceed 100 km/h (62 mph), or diagnostic code will be cancelled.

(e) Stop the vehicle and turn the ignition switch to OFF.

(f) Carry out steps (b), (c) and (d) again to test acceleration.

If code No. 27 reappears again, check the sub-oxygen sensor circuit. If the circuit is normal, replace the sub-oxygen sensor.

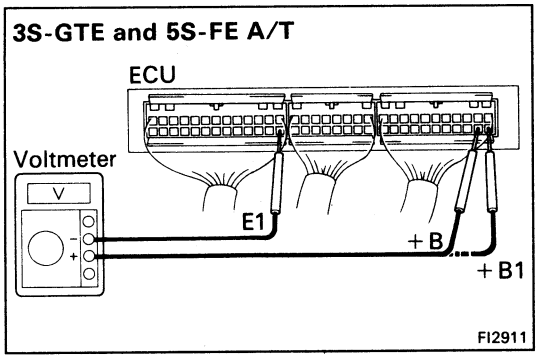

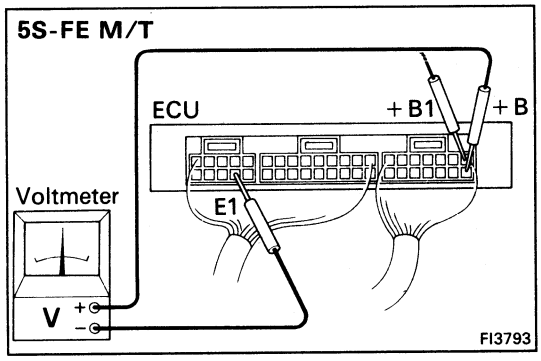

Electronic Controlled Unit (ECU)

INSPECTION OF ECU

HINT: The EFI circuit can be checked by measuring the resistance and voltage at the wiring connectors of the ECU.

1. INSPECT VOLTAGE OF ECU

Check the voltage between each terminal of the wiring connectors.

- Turn the ignition switch ON.
- Measure the voltage at each terminal.

HINT:

- Perform all voltage measurements with the connectors connected.
- Verify that the battery voltage is 11 V or more when the ignition switch is ON.

Voltage at ECU Wiring Connectors (3S-GTE)

Terminals	Condition		STD voltage (V)
+B, +B1 – E1	IG SW ON		10 – 14
BATT – E1	–		10 – 14
IDL – E2	IG SW ON	Throttle valve open	4 – 6
VTA – E2		Throttle valve fully closed	0.1 – 1.0
		Throttle valve fully open	3.2 – 4.2
VC – E2		–	4 – 6
VS – E2		Measuring plate fully closed	3.7 – 4.3
		Measuring plate fully open	0.2 – 0.5
	Idling (No load)		2.6 – 3.6
	3,000 rpm (No load)		1.0 – 2.0
No. 1, No. 2 – E01, No. 3 – E02, No. 4	IG SW ON		10 – 14
THA1 – E2	IG SW ON	Intake air temp. 20°C (68°F)	1 – 3
THW – E2		Coolant temp. 80°C (176°F)	0.1 – 1.1
STA – E1	Cranking		6 – 14
IGT – E1	Cranking or idling		0.8 – 1.2
RSC, RSO – E1	IG SW ON	Engine ECU connector connected	8 – 14
W– E1	No trouble ("CHECK" engine warning light off) and engine running		10 – 14
PIM– E2	IG SW ON		2.5 – 4.5
AC1– E1	IG SW ON	Air conditioning ON	8 – 14
*1 TVIS– E1		Throttle valve fully closed	2.0 or less
		Throttle valve open	10 – 14
*2 TVIS– E1	Idling		2.0 or less
	4,200 rpm or more		10 – 14
T– E1	IG SW ON	Check connector TE1 – E1 not connected	10 – 14
		Check connector TE1 – E1 connected	0.5 or less

Engine ECU Terminals

*1 w/ Regulator Gasoline *2 w/ Premium Gasoline

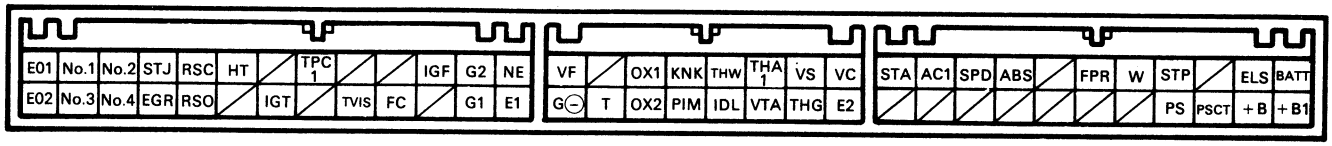

FI2796

Voltage at ECU Wiring Connectors (5S-FE M/T)

Terminals	Condition		STD voltage (V)
+B, +B1 – E1	IG SW ON		10 – 14
BATT – E1	–		10 – 14
IDL – E1	IG SW ON	Throttle valve open	8 – 14
PSW – E1	IG SW ON	Throttle valve fully closed (Throttle opener must be cancelled first)	4.5 – 5.5
PIM – E2	IG SW ON		3.3 – 3.9
VC – E2	IG SW ON		4.5 – 5.5
No.10 – E01, No.20 – E02	IG SW ON		10 – 14
THA – E2	IG SW ON	Intake air temp. 20°C (68°F)	1.7 – 3.1
THW – E2	IG SW ON	Coolant temp. 80°C (176°F)	0.3 – 0.8
STA – E1	Cranking		6 – 14
IGT – E1	Cranking or idling		0.8 – 1.2
ISCC, ISCO – E1	IG SW ON		8 – 14
W– E1	No trouble ("CHECK" engine warning light off) and engine running		10 – 14
A/C – E1	IG SW ON	Air conditioning ON	8 – 14
T – E1	IG SW ON	Check connector TE1 – E1 not connected	10 – 14
T – E1	IG SW ON	Check connector TE1 – E1 connected	1 or less
B/K – E1	Stop light SW ON (Brake pedal depressed)		10 – 14

Engine ECU Terminals

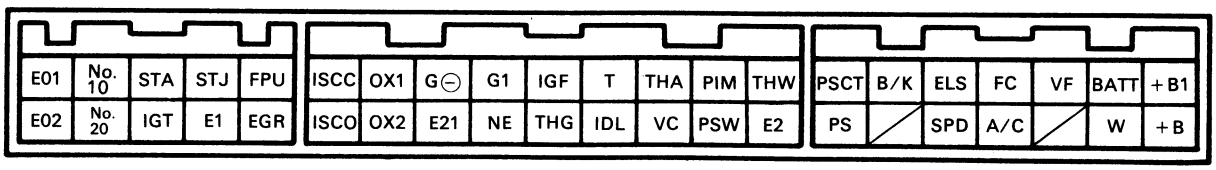

FI4065

Voltage at ECU Wiring Connectors (5S-FE A/T)

Terminals	Condition		STD voltage (V)
+B, +B1 – E1	IG SW ON		10 – 14
BATT – E1	–		10 – 14
IDL – E2	IG SW ON	Throttle valve open	8 – 14
VTA – E2	IG SW ON	Throttle valve fully closed (Throttle opener must be cancelled first)	0.8 – 1.2
	IG SW ON	Throttle valve fully open	3.2 – 4.2
PIM – E2	IG SW ON		3.3 – 3.9
VC– E2	IG SW ON		4.5 – 5.5
No.10 – E01, No.20 – E02	IG SW ON		10 – 14
THA – E2	IG SW ON	Intake air temp. 20°C (68°F)	1.7 – 3.1
THW – E2	IG SW ON	Coolant temp. 80°C (176°F)	0.3 – 0.8
STA – E1	Cranking		6 – 14
IGT – E1	Cranking or idling		0.8 – 1.2
ISCC, ISCO – E1	IG SW ON		8 – 14
W – E1	No trouble ("CHECK" engine warning light off) and engine running		10 – 14
A/C – E1	IG SW ON	Air conditioning ON	8 – 14
ACT – E1	IG SW ON	Air conditioning ON	4.5 – 5.5
T – E1	IG SW ON	Check connector TE1 – E1 not connected	10 – 14
	IG SW ON	Check connector TE1 – E1 connected	1 or less
NSW – E1	IG SW ON	Neutral start switch P or N range	0 – 2
	IG SW ON	Ex. neutral start switch P or N range	6 – 14
B/K – E1	Stop light SW ON (Brake Pedal depressed)		10 – 14

Engine & ECT ECU Terminals

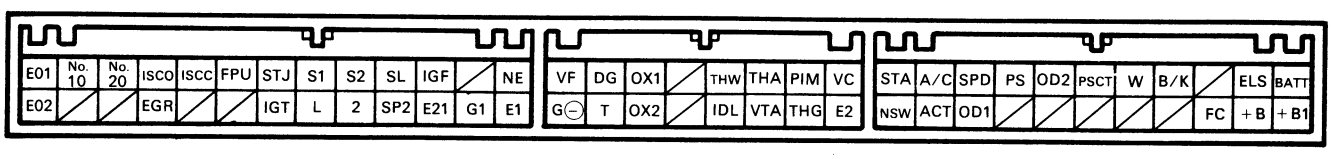

FI2796

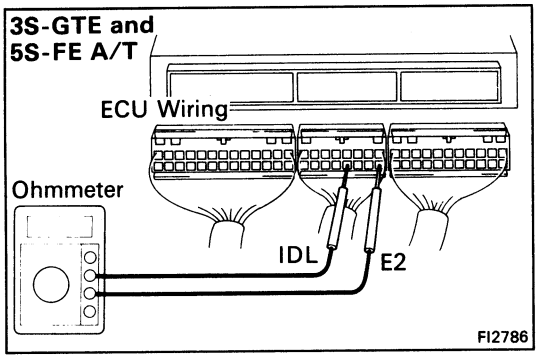

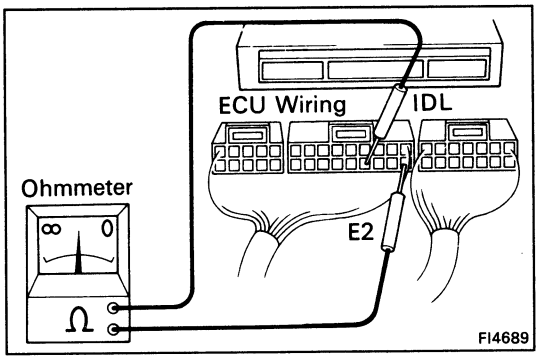

2. INSPECT RESISTANCE OF ECU

NOTICE:

- **Do not touch the ECU terminals.**
- **The tester probe should be inserted into the wiring connector from the wiring side.**

Check the resistance between each terminal of the wiring connectors.

- Disconnect the connectors from the ECU.
- Measure the resistance at each terminal.

Resistance of ECU Wiring Connectors (3S-GTE)

Terminals	Condition	STD resistance (Ω)
IDL – E2	Throttle valve open	Infinity
	Throttle valve fully closed	2,300 or less
VTA – E2	Throttle valve fully open	3,500 – 10,000
	Throttle valve fully closed	200 – 800
VC – E2	–	200 – 400
VS – E2	Measuring plate fully closed	200 – 600
	Measuring plate fully open	20 – 1,200
THA1 – E2	Intake air temp. 20°C (68°F)	2,000 – 3,000
THW – E2	Coolant temp. 80°C (176°F)	200 – 400
G1, G2 – G⊖	–	140 – 180
NE – G⊖	–	180 – 220
RSC, RSO – +B, +B1	–	17.7 – 23.9

Engine ECU Terminals

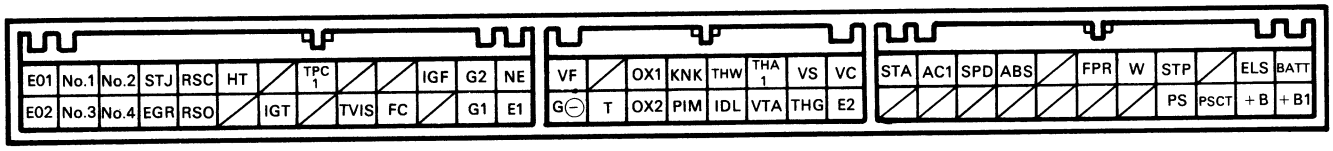

Resistance of ECU Wiring Connectors (5S-FE M/T)

Terminals	Condition	STD resistance (Ω)
IDL – E1	Throttle valve open	Infinity
	Throttle valve fully closed (Throttle opener must be cancelled first)	0
PSW – E1	Throttle valve fully open	0
	Throttle valve fully closed (Throttle opener must be cancelled first)	Infinity
THA – E2	Intake air temp. 20°C (68°F)	2,000 – 3,000
THW – E2	Coolant temp. 80°C (176°F)	200 – 400
G1, NE – G⊖	–	170 – 210
ISCC, ISCO – +B, +B1	–	19.3 – 22.3

Engine ECU Terminals

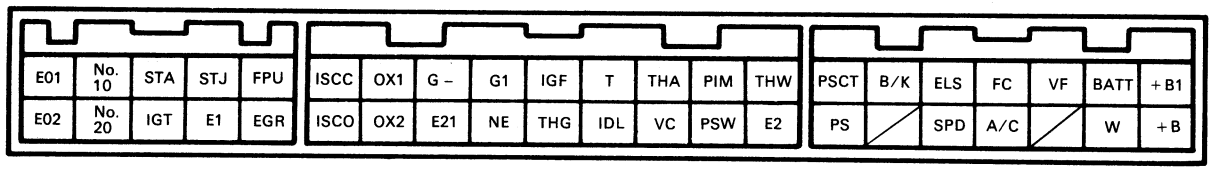

FI4065

Resistance of ECU Wiring Connectors (5S-FE A/T)

Terminals	Condition	STD resistance (Ω)
IDL – E2	Throttle valve open	Infinity
	Throttle valve fully closed (Throttle opener must be cancelled first)	2,300 or less
VTA – E2	Throttle valve fully open	2,300 – 10,000
	Throttle valve fully closed (Throttle opener must be cancelled first)	200 – 800
VC – E2	–	3,000 – 7,000
THA – E2	Intake air temp. 20°C (68°F)	2,000 – 3,000
THW – E2	Coolant temp. 80°C (176°F)	200 – 400
G1, NE – G⊖	–	170 – 210
ISCC, ISCO – +B, +B1	–	19.3 – 22.3

Engine & ECT ECU Terminals

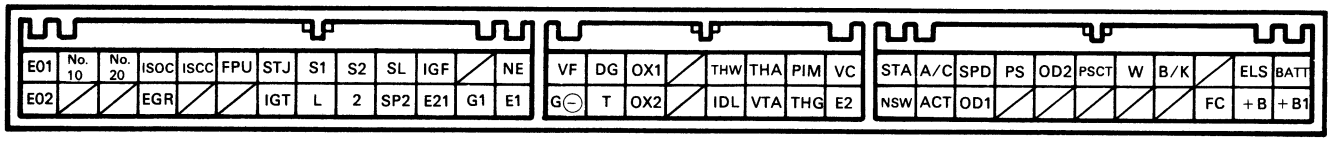

FI2796

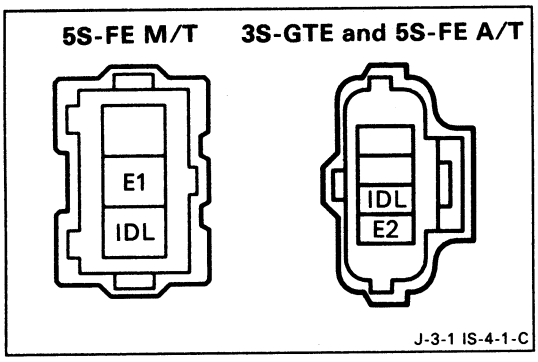

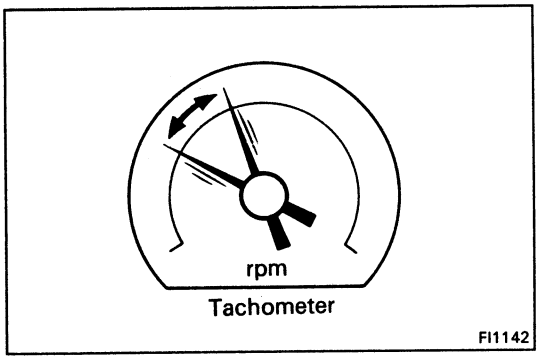

Fuel Cut RPM

INSPECTION OF FUEL CUT RPM

1. **WARM UP ENGINE**

   Allow the engine to warm up to normal operating temperature.

2. **INSPECT FUEL CUT RPM**

   (a) Disconnect the connector from the throttle position sensor.

   (b) Connect terminals IDL and E1 (5S-FE M/T) or E2 (3S-GTE and 5S-FE A/T) of the wiring connector.

   (c) Gradually raise the engine rpm and check that there is fluctuation between the fuel cut and fuel return points.

   HINT:
   - The vehicle should be stopped.
   - Measure with the A/C OFF.

Fuel cut rpm:	**3S-GTE**	**2,000 rpm**
	5S-FE	**1,600 rpm**
Fuel return rpm:	**3S-GTE**	**1,600 rpm**
	5S-FE	**1,500 rpm**

COOLING SYSTEM

	Page
DESCRIPTION	CO-2
TROUBLESHOOTING	CO-4
ENGINE COOLANT CHECK	CO-4
REPLACEMENT OF ENGINE OF COOLANT	CO-5
WATER PUMP	CO-10
THERMOSTAT	CO-14
RADIATOR	CO-16
ELECTRIC COOLING FANS	CO-21
Radiator Cooling Fans (w/ A/C)	CO-21
Radiator Cooling Fan (w/o A/C)	CO-28
Engine Compartment Cooling Fan (3S-GTE)	CO-31

DESCRIPTION

This engine utilizes a pressurized forced circulation cooling system which includes a thermostat equipped with a by-pass valve mounted on the inlet side.

3S-GTE

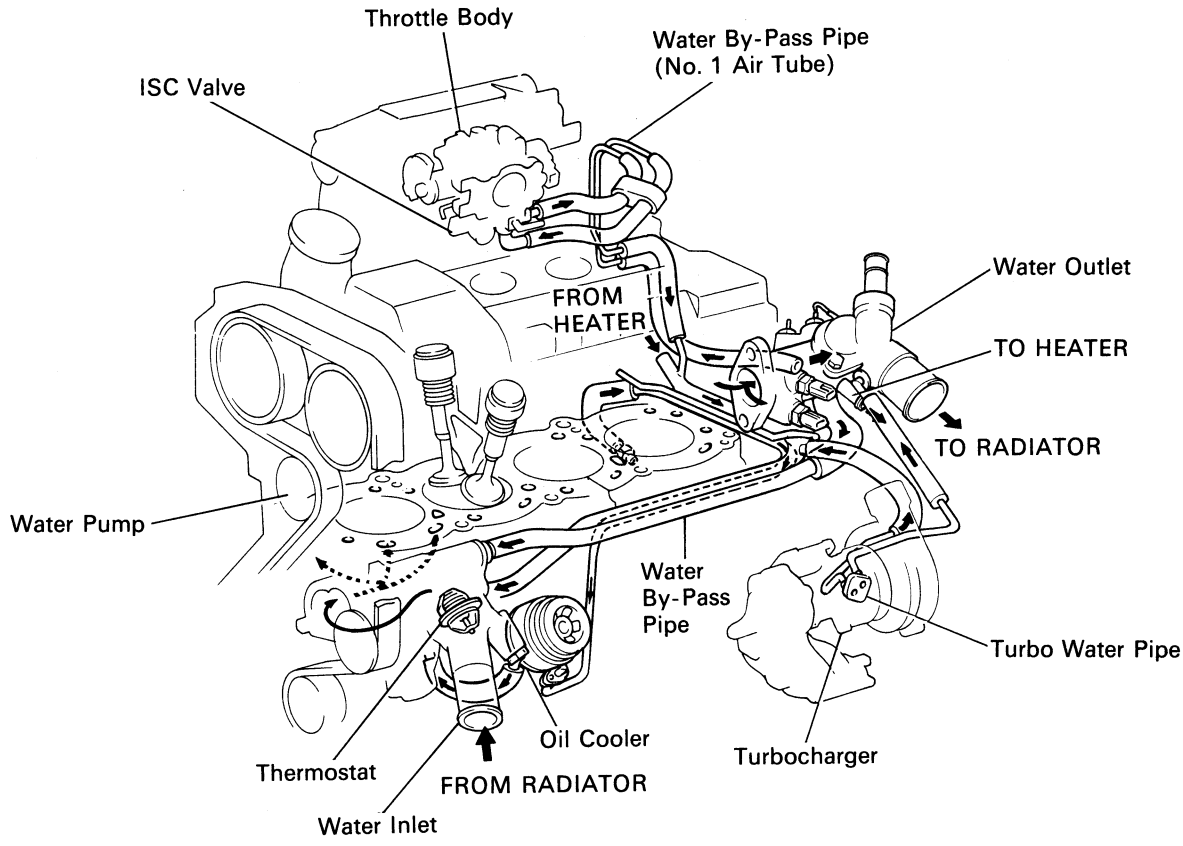

CO0980

5S-FE

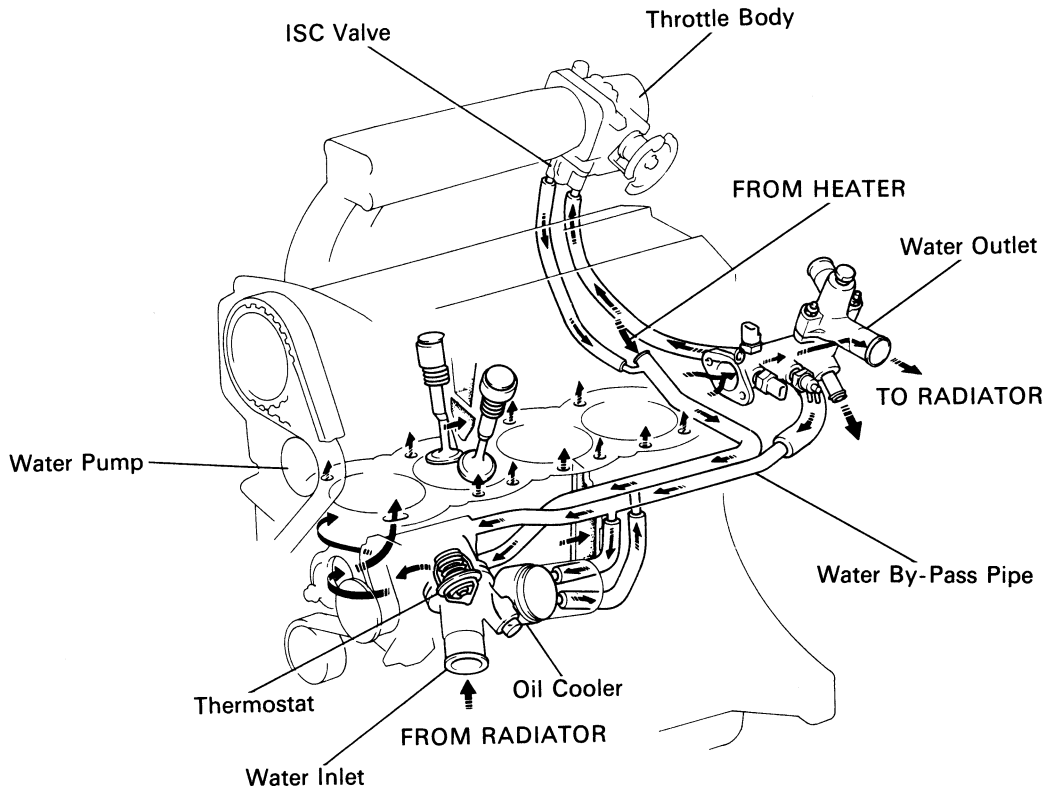

CO0981

The cooling system is composed of the water jacket (inside the cylinder block and cylinder head), radiator, water pump, thermostat, electric fan, hoses and other components.

Coolant which is heated in the water jacket is pumped to the radiator, through which an electric fan blows air to cool the coolant as it passes through. Coolant which has been cooled is then sent back to the engine by the water pump, where it cools the engine.

The water jacket is a network of channels in the shell of the cylinder block and cylinder head through which coolant passes. It is designed to provide adequate cooling of the cylinders and combustion chambers which become heated during engine operation.

RADIATOR

The radiator performs the function of cooling the coolant which has passed through the water jacket and become hot, and it is mounted in the front of the vehicle. The MR2 radiator is different from that in other models, in that it is a cross flow type in which the coolant flows horizontally. It includes side tanks and a core which connects them. The inlet for coolant from the water jacket and the drain cock for draining out coolant are located in the left tank. The outlet coolant and an air drain, which facilitates the supply of coolant to the engine are located in the right tank. The core contains many tubes through which coolant flows from left tank to the right tank as well as cooling fins which rediate heat away from the coolant in the tubes. Air sucked in by the electric cooing fan, as well as the wind generayed by the vehicle's travel, passes through the radiator, cooling the coolant heated by the water jecket as it passes through the tubes in the core. Models with automatic transmission include an automatic transmission fluid cooler incorpo rated into the cooling pipes. A fan with an electric motor is mounted behind the radiator to assist the flow of air through the radiator. The fan operates when the coolant temperature becomes high in order to prevent it from becoming too high.

RADIATOR CAP

The radiator cap is a pressure type cap which seals the radiator, resulting in pressurization of the radiator as the coolant expands. The pressurization prevents the coolant from boiling even when the coolant temperature exceeds 100°C (212°F). A relief valve (pressurization valve) and a vacuum valve (negative pressure valve) are built into the radiator cap. The relief valve opens and lets steam escape through the overflow pipe when the pressure generated inside the cooling system exceeds the limit (coolant temperature: 110 – 120°C, 230 – 248°F, pressure; 0.3 – 1.0 kg/cm^2, 4.3 – 14.2 psi, 29.4 – 98.1 kPa). The vacuum valve opens to alleviate the vacuum which develops in the coolant system after the engine is stopped and the coolant temperature drops. The valve's opening allows the coolant in the reservoir tank to return to the cooling system.

RESERVOIR TANK

The reservoir tank is used to catch coolant which overflows the cooling system as a result of volumetric expansion when the coolant is heated. The coolant in the reservoir tank returns to the radiator when the coolant temperature drops, thus keeping the radiator full at all times and avoiding needless coolant loss. Check the reservoir tank level to learn if the coolant needs to be replenished.

WATER PUMP

The water pump is used for forced circulation of coolant through the cooling system. It is mounted on the front of the cylinder block and driven by a timing belt.

THERMOSTAT

The thermostat has a wax type by-pass valve and is mounted in the water inlet housing. The thermostat includes a type of automatic valve operated by fluctuations in the coolant temperature. This valve closes when the coolant temperature drops, preventing the circulation of coolant through the engine and thus permitting the engine to warm up rapidly. The valve opens when the coolant temperature has risen, allowing the circulation of coolant. Wax inside the thermostat expands when heated and contracts when cooled. Heating the wax thus generates pressure which overpowers the force of the spring which keeps the valve closed, thus opening the valve. When the wax cools, its contraction causes the force of the spring take effect once more, closing the valve. The thermostat in this engine operates at a temperature of 82°C (180°F).

TROUBLESHOOTING

Problem	Possible cause	Remedy	Page
Engine overheats	Dirt, leaves or insects in radiator or condenser	Clean radiator or condenser	CO-16
	Hoses, water pump, thermostat housing, radiator, heater, core plugs or head gasket leakage	Repair as necessary	
	Thermostat faulty	Check thermostat	CO-14
	Incorrect ignition timing	Reset timing	IG-17, 22
	Electric cooling system faulty	Inspect electric cooling system	CO-22, 33
	Radiator hose plugged or rotted	Replace hose	
	Water pump faulty	Replace water pump	CO-10
	Radiator plugged or cap faulty	Check radiator and cap	CO-16
	Cylinder head or block cracked or water passage clogged	Repair as necessary	

HINT: Removal of the thermostat would have an adverse effect, causing a lowering of cooling efficiency. Do not remove the thermostat, even if the engine tends to overheat.

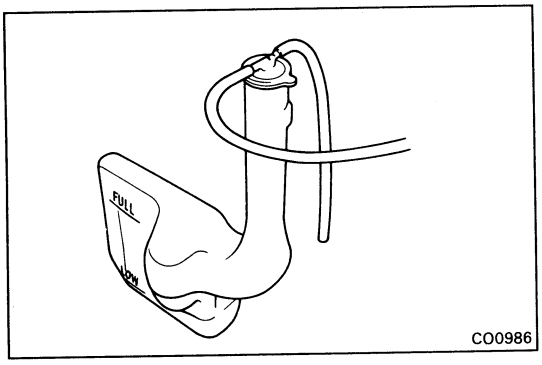

ENGINE COOLANT CHECK

1. **CHECK ENGINE COOLANT LEVEL AT RESERVE TANK**

The coolant level should be between the "LOW" and "FULL" lines.

If low, check for leaks and add coolant up to the "FULL" line.

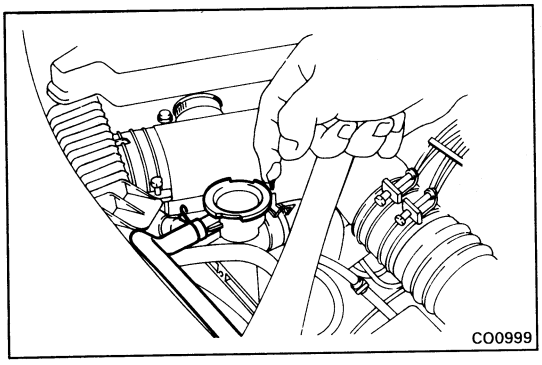

2. **CHECK ENGINE COOLANT QUALITY**

There should not be any excessive deposits of rust or scales around the radiator (water filler) cap or water filler hole, and the coolant should be free from oil.

If excessively dirty, replace the coolant.

REPLACEMENT OF ENGINE COOLANT

ENGINE COOLANT CIRCUIT

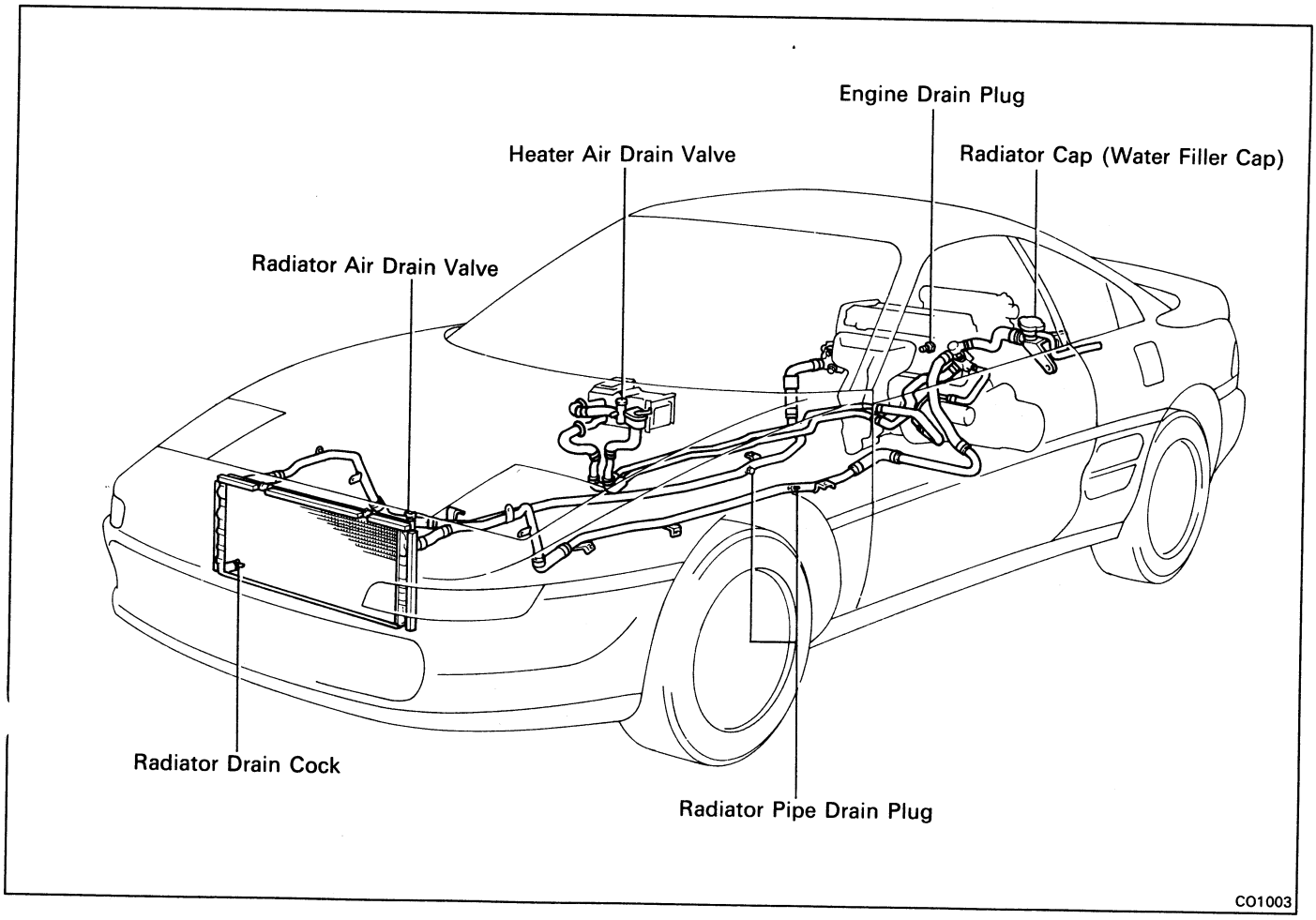

NOTICE:

- **To avoid the danger of burns, do not begin work until the engine and coolant are properly cooled down.**
- **To ensure that coolant is poured in properly, perform the operation at a level area. Performing work with the vehicle inclined may cause improper removal of coolant or improper air removal when pouring coolant.**
- **When replacement has been performed, check the water level in the water filler and reservoir tank once or twice within 500 km (311 miles) of driving or within one week.**

DRAINAGE OF ENGINE COOLANT

1. **REMOVE REAR FUEL TANK PROTECTOR**
2. **REMOVE FRONT LUGGAGE UNDER COVERS**

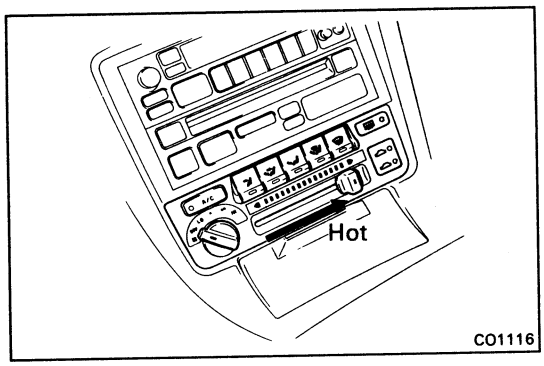

3. **DRAIN ENGINE COOLANT**

(a) Set the heater control lever to hot.

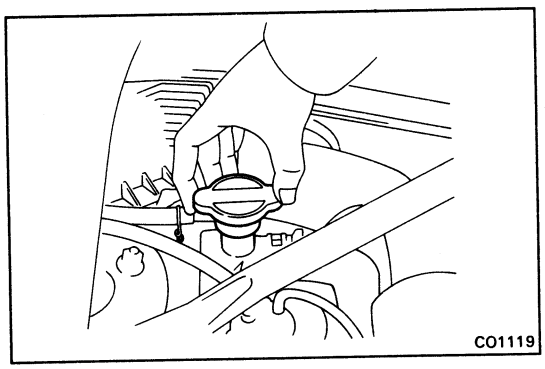

(b) Remove the radiator cap.

CAUTION: To avoid the danger of being burned, do not remove the radiator cap while the engine and radiator are still hot, as fluid and steam can be blown out under pressure.

(c) Drain the coolant from the radiator cock and engine drain plug (engine drain plug are at the rear left of engine block) and two radiator pipe plugs.

(d) Close the drain cocks.

Torque:

Engine drain plug	
3S-GTE	**250 kg-cm (18 ft-lb, 25 N·m)**
5S-FE	**130 kg-cm (9 ft-lb, 13 N·m)**
Radiator drain plug	**170 kg-cm (12 ft-lb, 17 N·m)**

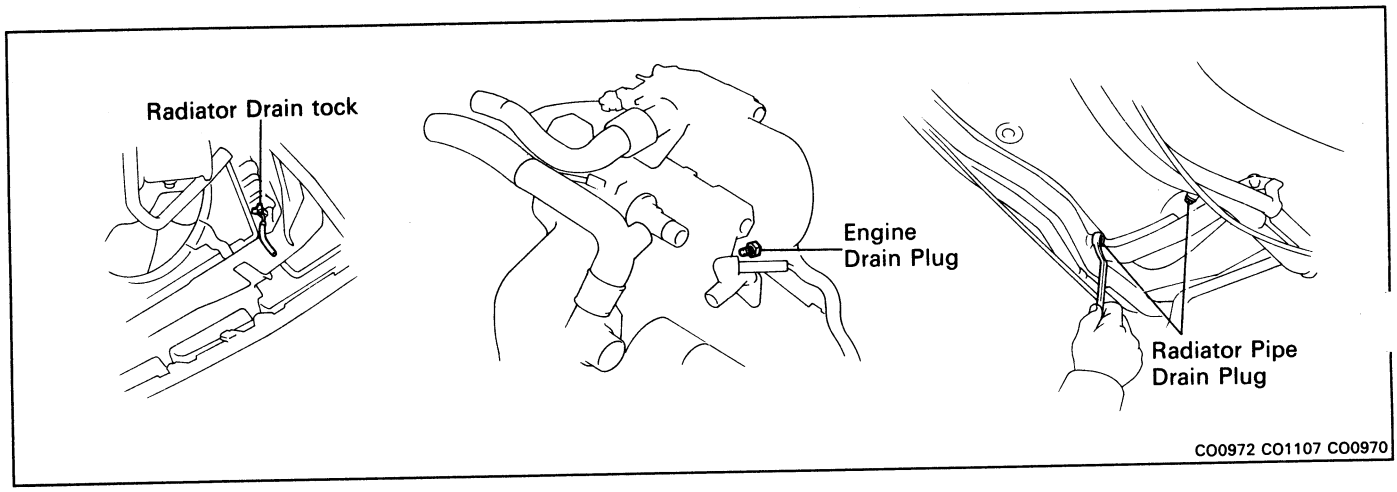

REFILL OF ENGINE COOLANT

1. REMOVE SPARE TIRE
2. REMOVE FRONT LUGGAGE COMPARTMENT TRIM
3. REMOVE UPPER RADIATOR SUPPORT SEAL

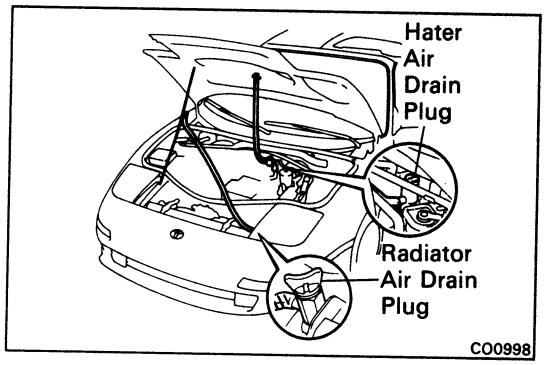

4. SET SERVICE HOSES
   (a) Connect the service hoses to the radiator air drain and heater valve.
   (b) Suspend the opposite end to the service hose connected to radiator air drain to the front hood stay.
   (c) Suspend the opposite end to the service hose connected to heater valve to the front hood.

   NOTICE: Do not close-off or pinch any of the service hoses.

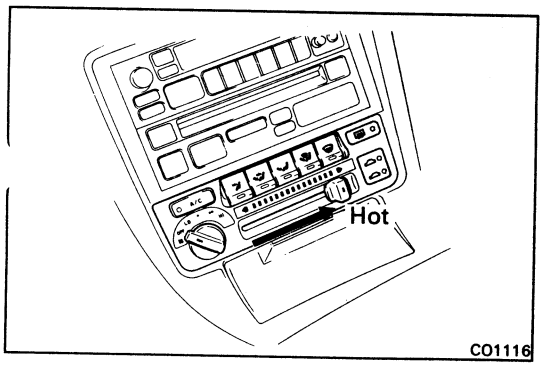

5. FILL WITH ENGINE COOLANT
   (a) Set the heater control lever to hot.

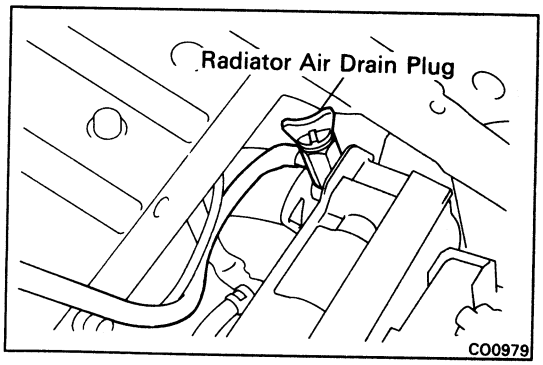

   (b) Open the radiator and heater air drain plugs above three turns.

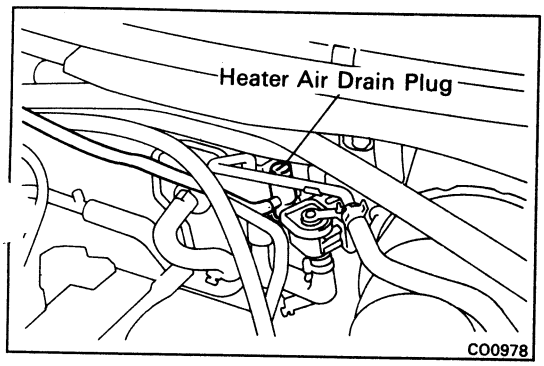

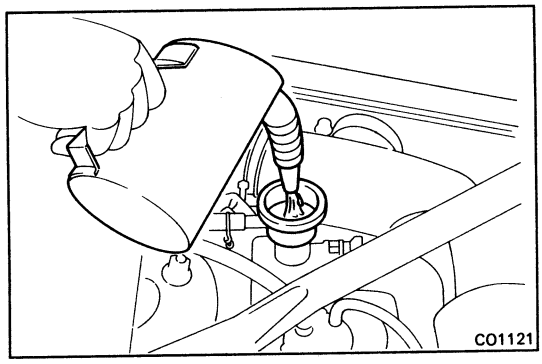

(c) Slowly fill the water filler with coolant.

- Use a good brand of ethylene-glycol base coolant, mixed according to the manufacturer's directions.
- Using coolant which includes more than 50 % ethylene-glycol (but not more than is recommended).

NOTICE:

- **Do not use alcohol type coolant.**
- **The coolant should be mixed with demineralized water or distilled water.**

Capacity (w/ Heater):

3S-GTE 13.6 liters (14.4 US qts, 12.0 Imp. qts)
5S-FE 13.0 liters (13.7 US qts, 11.4 Imp. qts)

(d) Check that air is absent from the air drain plugs of the radiator and heater while filling the water filler inlet to the top with coolant.

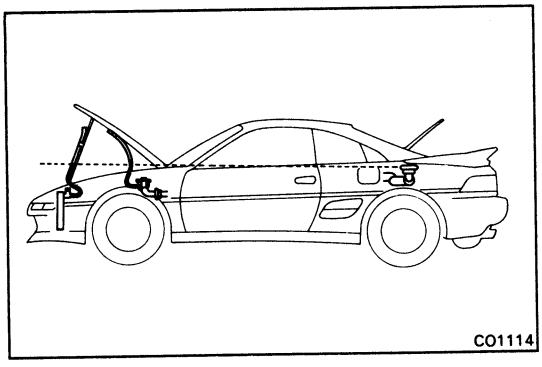

(e) Visually check that the level of coolant in the air drain service hoses of the radiator and heater are the same as in the water filler.

NOTICE: If the water level in the air drain service hose is clearly lower, air removal has been incomplete so check if the service hose is crushed or bent, them perform step (c).

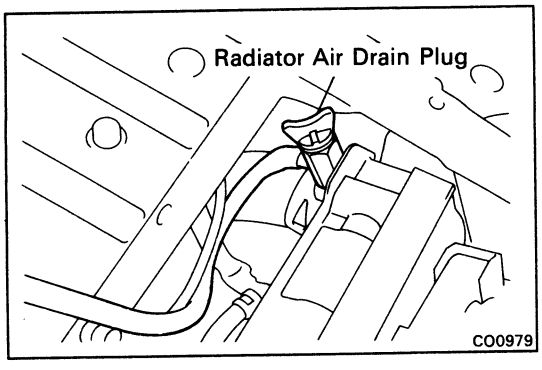

(f) When the coolant level in the air drain service hoses stops dropping, close the air drain plugs of the radiator and heater.

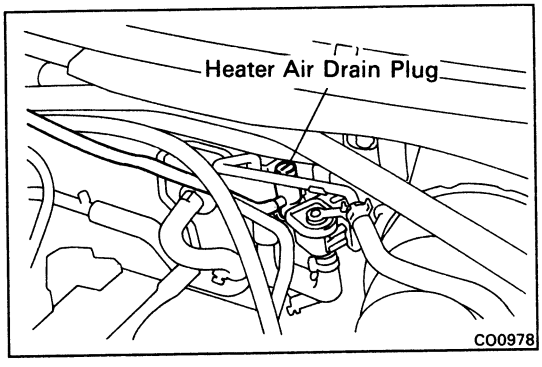

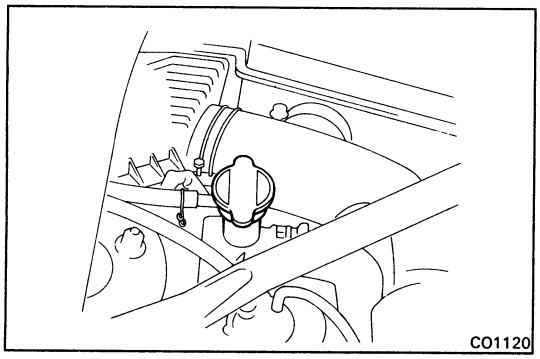

(g) Fasten the radiator cap to the first stop point.

NOTICE: Do not tighten the radiator cap completely (to the second stop point).

(h) Start the engine and run at fast idle for approx. 3 minutes, and stop the engine.

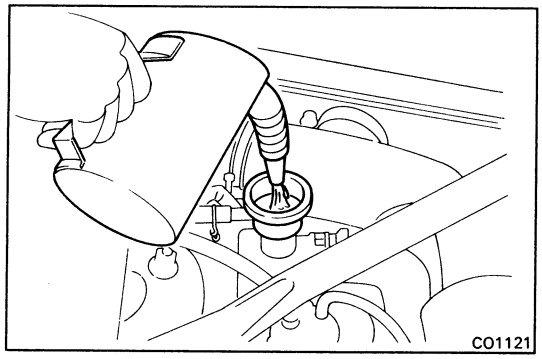

(i) Add more coolant and repeat steps (h) and (i).

HINT: By performing steps (h) and (i), 0.2 – 0.5 liters (0.2 – 0.5 US qts, 0.2 – 0.4 Imp. qts) can normally be added.

(j) Check that the coolant level in the water filler has not dropped.

If the coolant level has dropped, add coolant and repeat the steps from (g) onward.

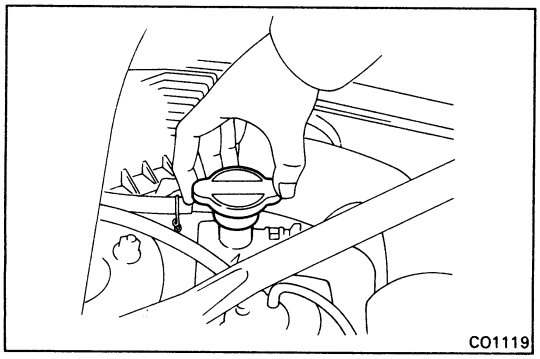

(k) Completely tighten the radiator cap.

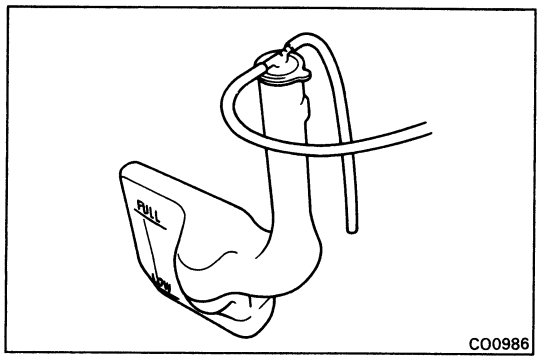

(l) Fill coolant into the reservoir tank up to the "FULL" line.

6. **INSTALL UPPER RADIATOR SUPPORT SEAL**
7. **INSTALL FRONT LUGGAGE COMPARTMENT TRIM**
8. **INSTALL SPARE TIRE**
9. **INSTALL REAR FUEL TANK PROTECTOR**
10. **INSTALL FRONT LUGGAGE UNDER COVERS**

WATER PUMP

COMPONENTS

3S-GTE

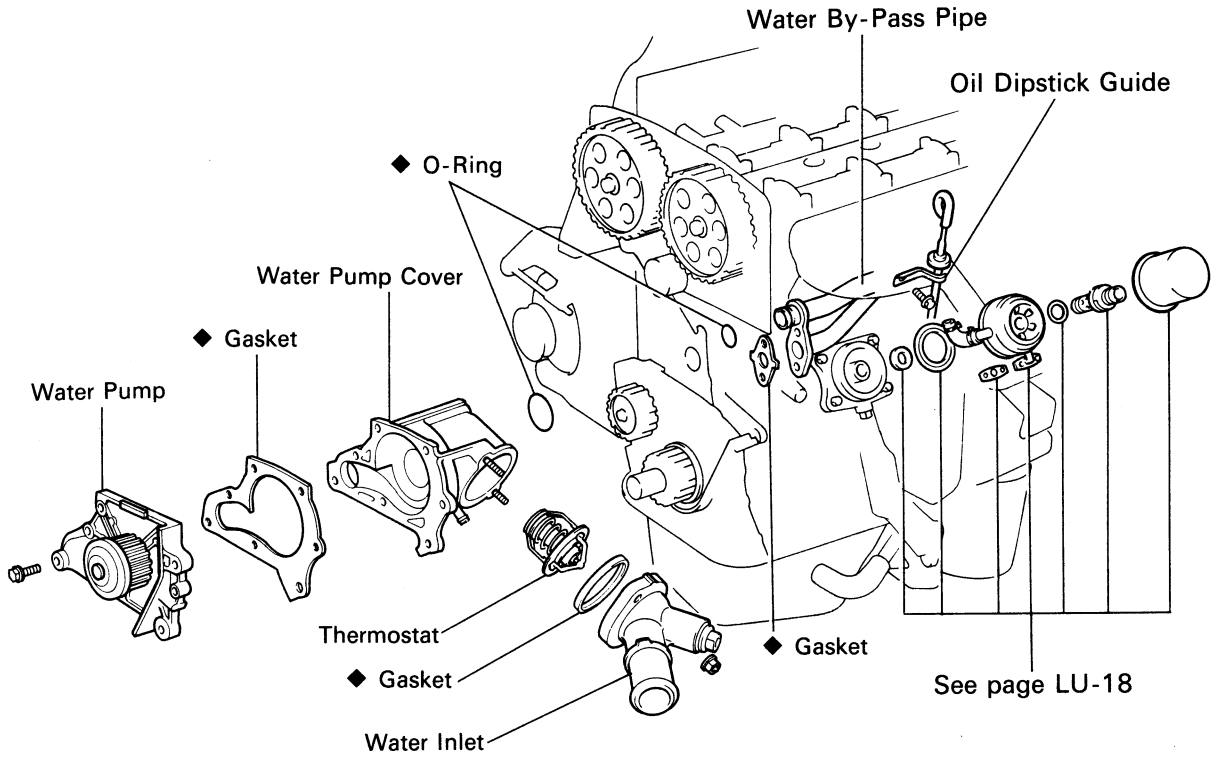

◆ Non-reusable part

CO1117

5S-FE

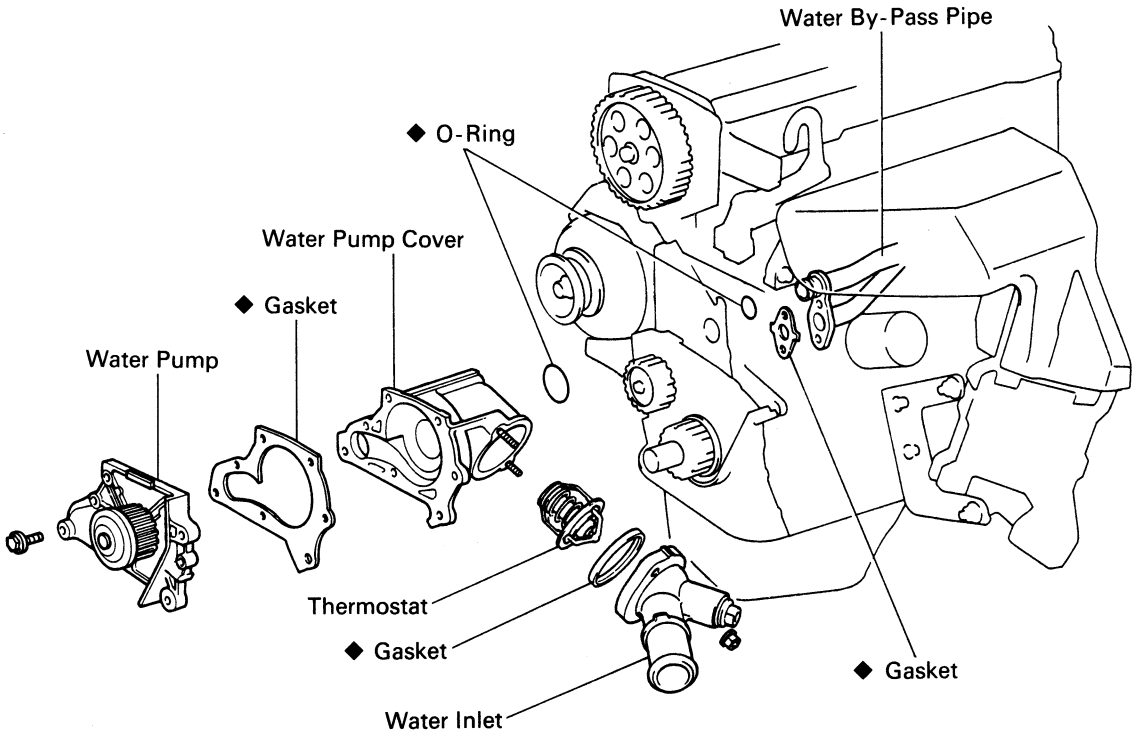

◆ Non-reusable part

CO1113

REMOVAL OF WATER PUMP

(See page CO-10)

1. DRAIN ENGINE COOLANT (See page CO-6)

2. DISCONNECT RADIATOR HOSE FROM WATER INLET

3. REMOVE TIMING BELT
   3S-GTE (See steps 1 to 25 on pages EM-26 to 31)
   5S-FE (See steps 1 to 21 on pages EM-47 to 52)

4. (5S-FE)
   REMOVE A/C COMPRESSOR IDLER PULLEY
   (See steps 31 ((b) to (d)) on page EM-187)

5. REMOVE NO.2 IDLER PULLEY
   3S-GTE (See step 27 on page EM-32)
   5S-FE (See step 23 on page EM-52)

6. (5S-FE)
   REMOVE TIMING BELT TENSION SPRING

7. (3S-GTE)
   REMOVE OIL COOLER
   (See steps 7 to 10 on pages EM-18 and 19)

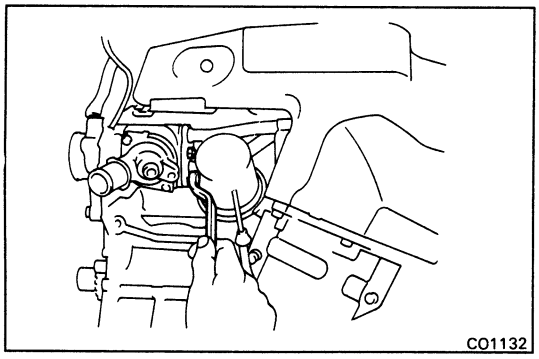
CO1132

8. REMOVE WATER PUMP AND WATER PUMP COVER ASSEMBLY
   (a) Remove the two nuts holding the water pump to the water by-pass pipe.

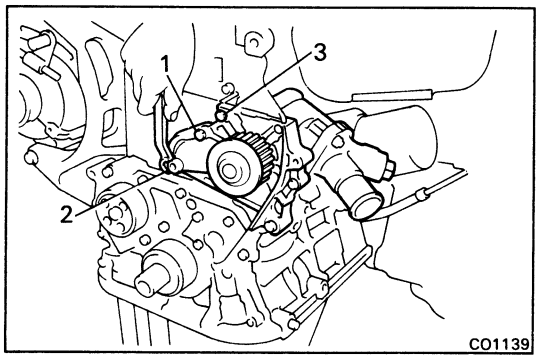

CO1139

   (b) Remove the three bolts in the sequence shown.
   (c) Pull out the water pump together with the water pump cover.
   (d) Remove the gasket and two O-rings from the water pump and water by-pass pipe.

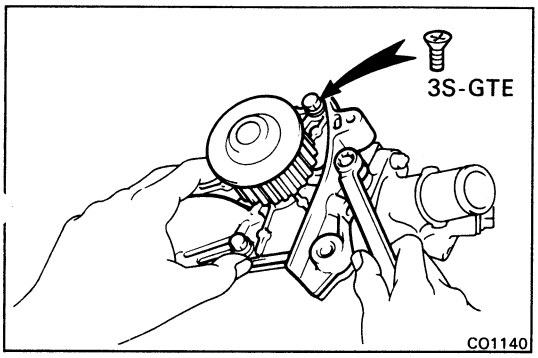

CO1140

9. SEPARATE WATER PUMP AND WATER PUMP COVER
   Remove the three bolts, water pump and gasket from the water pump cover.

10. REMOVE WATER INLET AND THERMOSTAT FROM WATER PUMP COVER (See step 4 on page CO-14)

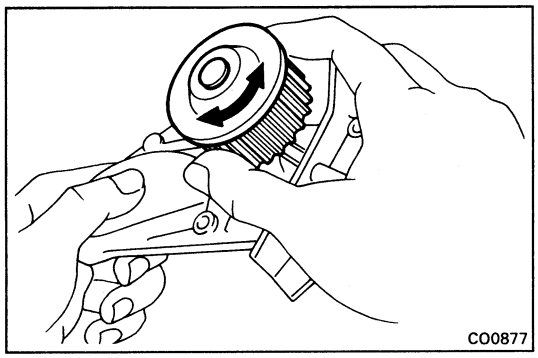

INSPECTION OF WATER PUMP

INSPECT WATER PUMP

Turn the pulley and check that the water pump bearing moves smoothly and quietly.

INSTALLATION OF WATER PUMP

(See page CO-10)

1. **INSTALL THERMOSTAT AND WATER INLET TO WATER PUMP COVER**
   (See steps 1 and 2 on page CO-15)

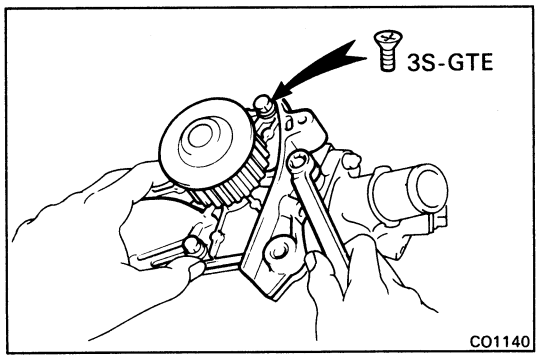

2. **ASSEMBLE WATER PUMP AND WATER PUMP COVER**

   Install a new gasket and the water pump to the pump cover with the three bolts.

   Torque: 95 kg-cm (82 in.-lb, 9.3 N·m)

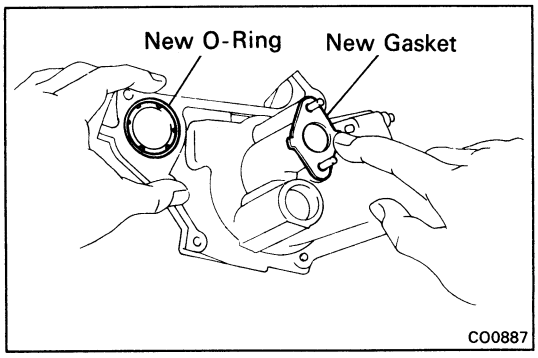

3. **INSTALL WATER PUMP AND WATER PUMP COVER ASSEMBLY**

   (a) Install new O-ring and gasket to the water pump cover.

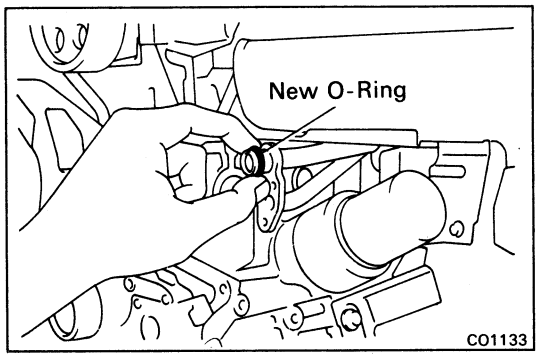

   (b) Install a new O-ring to the water by-pass pipe.

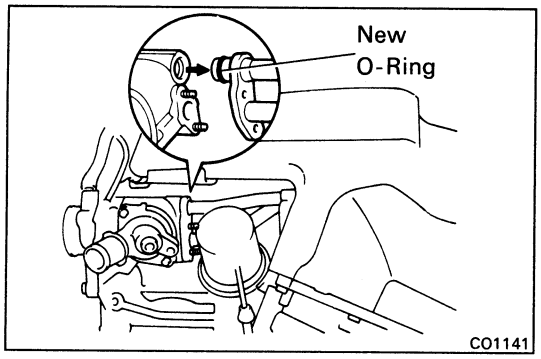

(c) Apply soapy water to the O-ring on the water by-pass pipe.

(d) Connect the pump cover to the water by-pass pipe. Do not install the nuts yet.

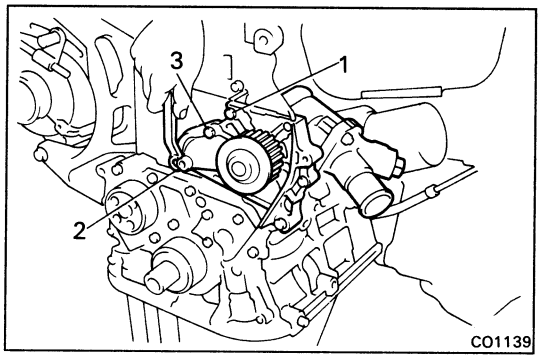

(e) Install the water pump with the three bolts. Tighten the bolts in the sequence shown.

Torque:

3S-GTE	**80 kg-cm (69 in.-lb, 8.0 N·m)**
5S-FE	**95 kg-cm (82 in.-lb, 9.3 N·m)**

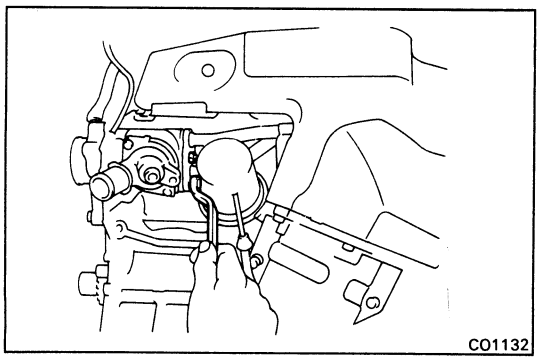

(f) Install the two nuts holding the water pump cover to the water by-pass pipe.

Torque:

3S-GTE	**120 kg-cm (9 ft-lb, 12 N·m)**
5S-FE	**95 kg-cm (82 in.-lb, 9.3 N·m)**

4. **(3S-GTE)**
   INSTALL OIL COOLER
   (See steps 2 to 5 on pages LU-21 and 22)

5. **(5S-FE)**
   INSTALL TIMING BELT TENSION SPRING

6. **INSTALL NO.2 IDLER PULLEY**
   3S-GTE (See step 3 on page EM-35)
   5S-FE (See step 3 on page EM-55)

7. **(5S-FE)**
   INSTALL A/C COMPRESSOR IDLER PULLEY
   (See step 13 ((b) to (e)) on page EM-221)

8. **INSTALL TIMING BELT**
   3S-GTE (See steps 5 to 32 on pages EM-35 to 41)
   5S-FE (See steps 5 to 26 on pages EM-55 to 60)

9. **CONNECT RADIATOR HOSE TO WATER INLET**

10. **FILL WITH ENGINE COOLANT (See page CO-7)**

THERMOSTAT

REMOVAL OF THERMOSTAT

1. **DRAIN ENGINE COOLANT (See page CO-6)**
2. **DISCONNECT RADIATOR HOSE FROM WATER INLET**
3. **(3S-GTE)**
   DISCONNECT OIL DIPSTICK GUIDE FROM WATER INLET (See step 8 on page LU-19)

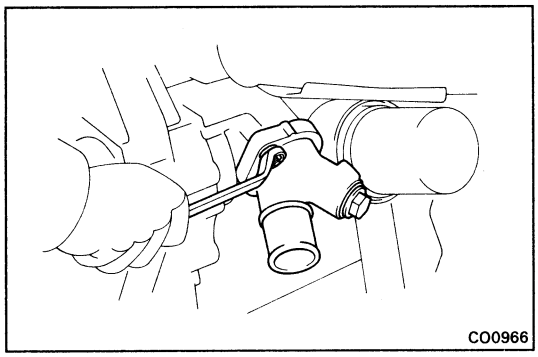
CO0966

4. **REMOVE WATER INLET AND THERMOSTAT**
   (a) Remove the two nuts and water inlet from the water pump.
   (b) Remove the thermostat.
   (c) Remove the gasket from the thermostat.

INSPECTION OF THERMOSTAT

INSPECT THERMOSTAT

HINT: The thermostat is numbered with the valve opening temperature.

(a) Immerse the thermostat in water and gradually heat the water.

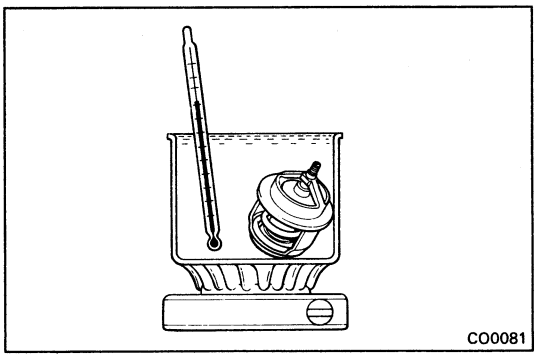
CO0081

(b) Check the valve opening temperature.

Valve opening temperature:
80 – 84°C (176 – 183°F)

If the valve opening temperature is not as specified, replace the thermostat.

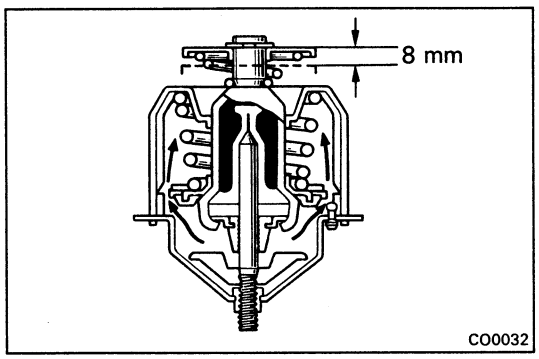

CO0032

(c) Check the valve lift.

Valve lift:
8 mm (0.31 in.) or more at 95°C (203°F)

If the valve lift is less than specification, replace the thermostat.

(d) Check that the valve spring is tight when the thermostat is fully closed.

If necessary, replace the thermostat.

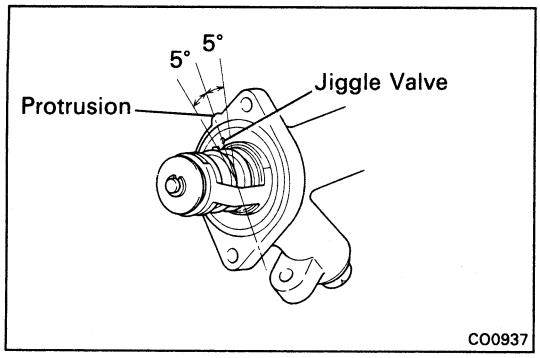

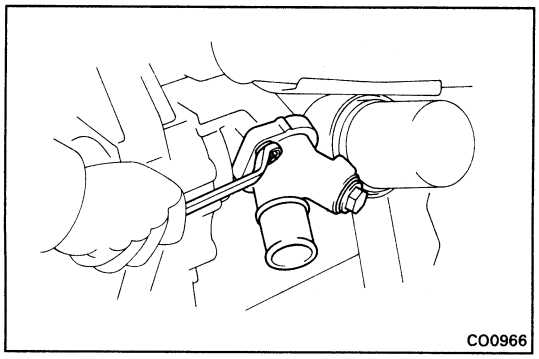

INSTALLATION OF THERMOSTAT

1. PLACE THERMOSTAT IN WATER PUMP

(a) Install a new gasket to the thermostat.

(b) Align the jiggle valve of the thermostat with the upper side of thestud bolt, and insert the thermostat in the water pump.

HINT: The jiggle valve may be set within 5° of either side of the precribed position.

2. INSTALL WATER INLET

Install the water inlet with the two nuts.

Torque:

3S-GTE	**80 kg-cm (69 in.-lb, 7.8 N·m)**
5S-FE	**90 kg-cm (78 in.-lb, 8.8 N·m)**

3. (3S-GTE)
CONNECT OIL DIPSTICK GUIDE TO WATER INLET
(See step 4 on page LU-22)

4. CONNECT RADIATOR HOSE TO WATER INLET

5. FILL WITH ENGINE COOLANT (See page CO-7)

6. START ENGINE AND CHECK FOR LEAKS

RADIATOR

CLEANING OF RADIATOR

Using water or a steam cleaner, remove any mud and dirt from the radiator core.

NOTICE: If using a high pressure type cleaner, be careful not to deform the fins of the radiator core. If the cleaner nozzle pressure is 30 – 35 kg/cm² (427 – 498 psi, 2,942 – 3,432), keep a distance at least 40 – 50 cm (15.75 – 19.69 in.) between the radiator core and cleaner nozzle.

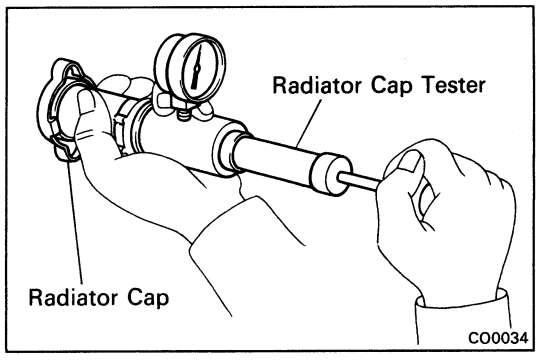

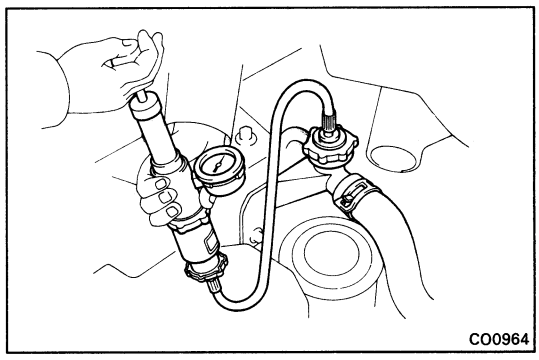

INSPECTION OF RADIATOR

1. INSPECT RADIATOR (WATER FILLER) CAP

Using a radiator cap tester, pump the tester and measure the relief valve opening pressure.

Standard opening pressure:
0.75 – 1.05 kg/cm² (10.7 – 14.9 psi, 74 – 103 kPa)

Minimum opening pressure:
0.6 kg/cm² (8.5 psi, 59 kPa)

If the opening pressure is less than minimum, replace the radiator cap.

2. INSPECT COOLING SYSTEM FOR LEAKS

(a) Fill the radiator with coolant and attach a radiator cap tester to the radiator (water filler) cap.

(b) Warm up the engine.

(c) Pump it to 1.2 kg/cm² (17.1 psi, 118 kPa), check that pressure does not drop.

If the pressure drops, check for leaks on the hoses, radiator or water pump. If no external leaks are found, check the heater core, cylinder block and head.

REMOVAL OF RADIATOR

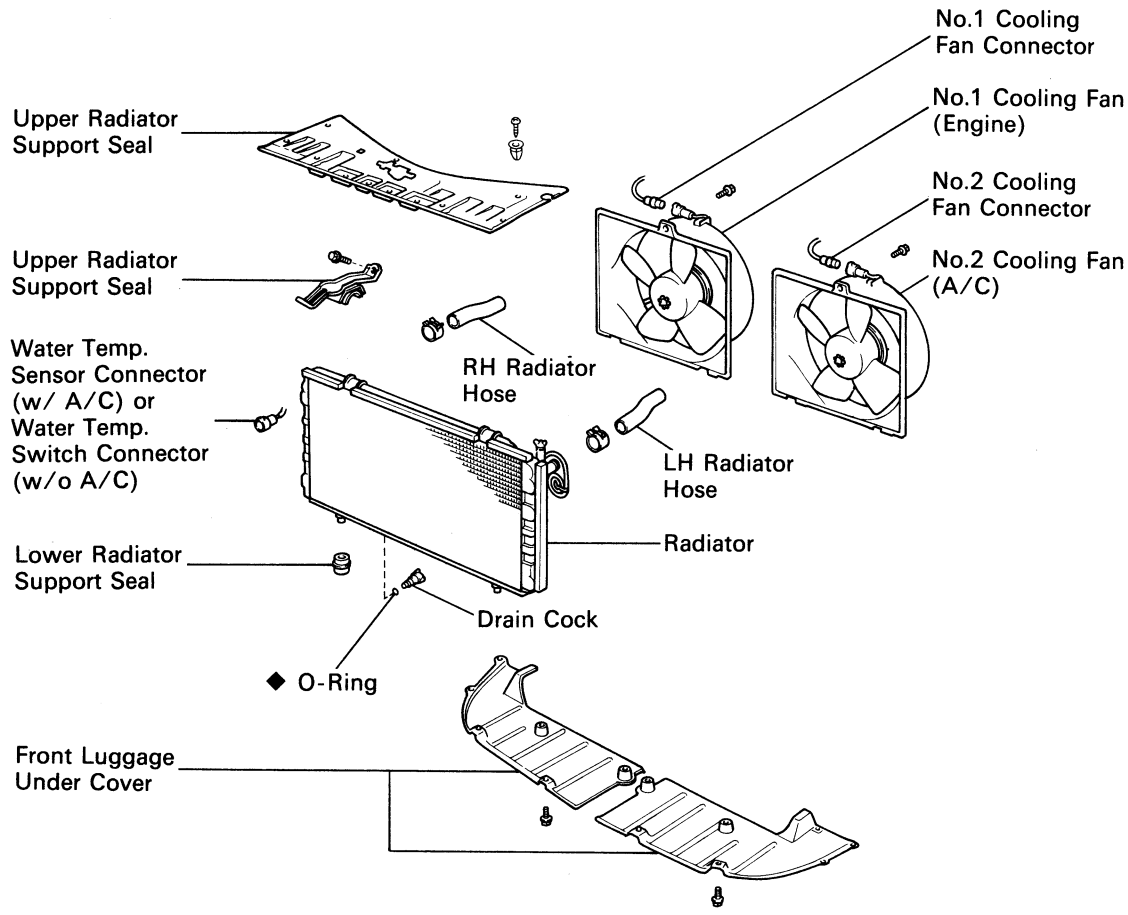

◆ Non-reusable part

CO0985

1. **DISCONNECT CABLE FROM NEGATIVE TERMINAL OF BATTERY**

   CAUTION: Work must be started after approx. 20 seconds or longer from the time the ignition switch is turned to the "LOCK" position and the negative (–) terminal cable is disconnected from the battery.

2. **REMOVE FRONT LUGGAGE UNDER COVERS**

3. **DRAIN ENGINE COOLANT (See page CO-6)**

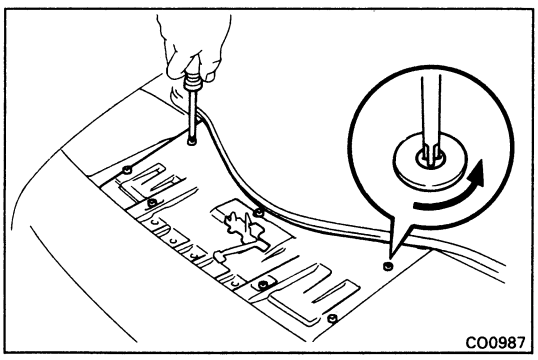

CO0987

4. **REMOVE UPPER RADIATOR SUPPORT SEAL**

   Remove the seven clips and support seal.

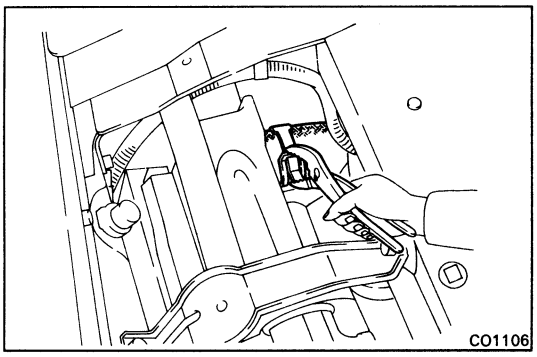

5. DISCONNECT RADIATOR HOSES

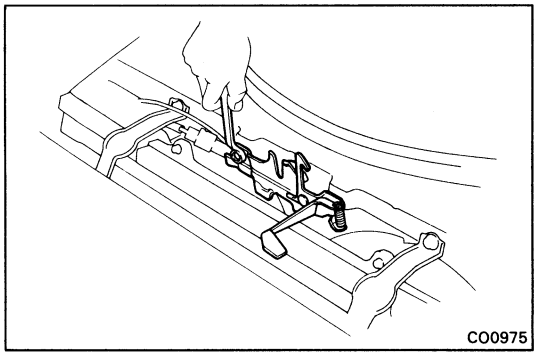

6. REMOVE FRONT HOOD LOCK

Remove the two bolts and hood lock.

7. DISCONNECT RADIATOR COOLING FAN CONNETORS

8. DISCONNECT WATER TEMPERATURE SENSOR (w/A/C) or SWITCH (w/o A/C) CONNECTOR

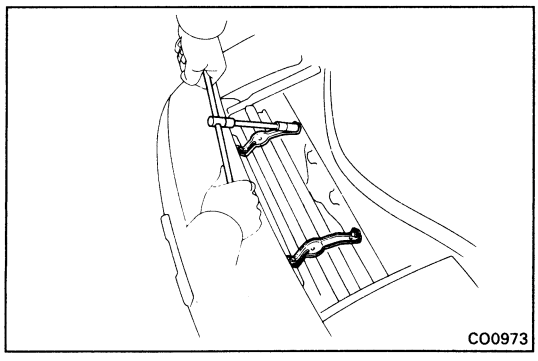

9. REMOVE RADIATOR AND COOLING FANS

(a) Remove the two bolts and upper support. Remove the two upper supports.

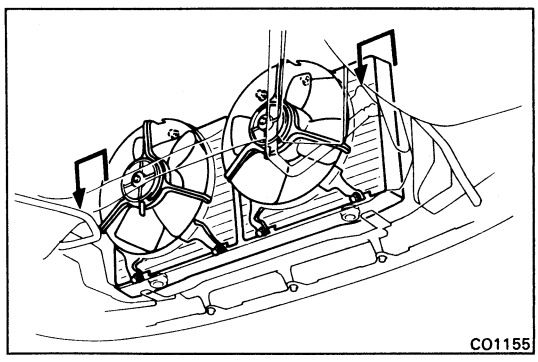

(b) Remove the radiator and two cooling fan assembly.

(c) Remove the two lower supports.

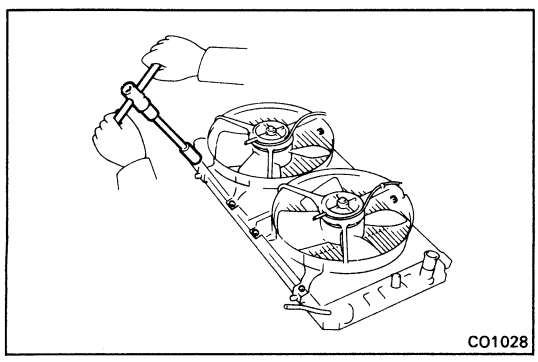

10. REMOVE NO.1 AND NO.2 COOLING FANS FROM RADIATOR

Remove the three bolts and cooling fan. Remove the two cooling fans.

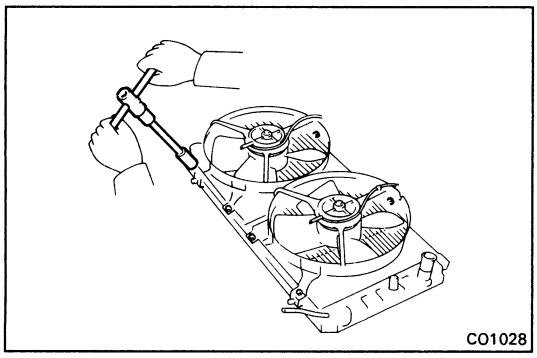
CO1028

INSTALLATION OF RADIATOR

(See page CO-17)

1. **INSTALL NO.1 AND NO.2 COOLING FANS TO RADIATOR**

   Install the cooling fan with the three bolts. Install the two cooling fans.

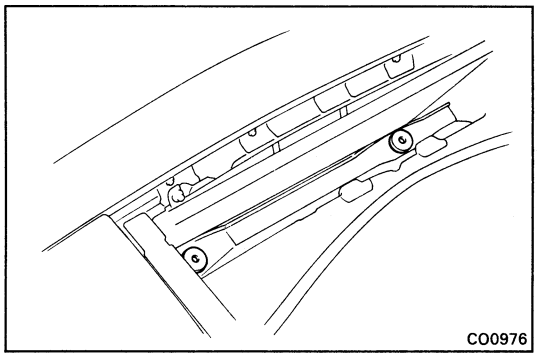
CO0976

2. **INSTALL RADIATOR AND COOLING FANS**

   (a) Place the two lower supports in position on the body.

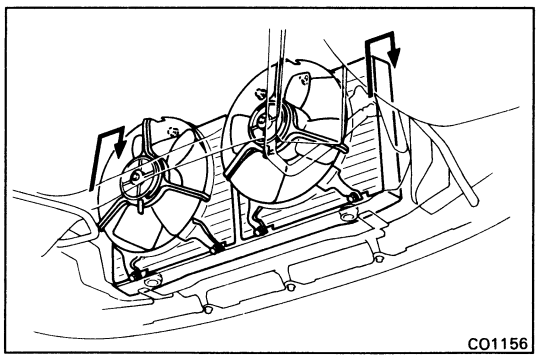
CO1156

   (b) Place the radiator and two cooling fan assembly in position on the body.

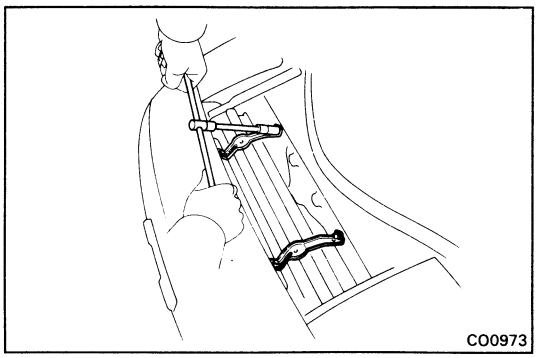
CO0973

   (c) Install the upper supports with the two bolts. Install the two upper supports.

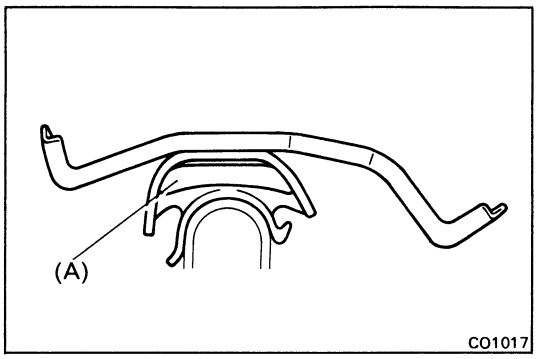

CO1017

   HINT: After installation, check that the rubber cushion (A) of the supports are not depressed.

3. **CONNECT WATER TEMPERATURE SENSOR (w/ A/C) OR SWITCH (w/o A/C) CONNECTOR**

4. **CONNECT RADIATOR COOLING FAN CONNECTORS**

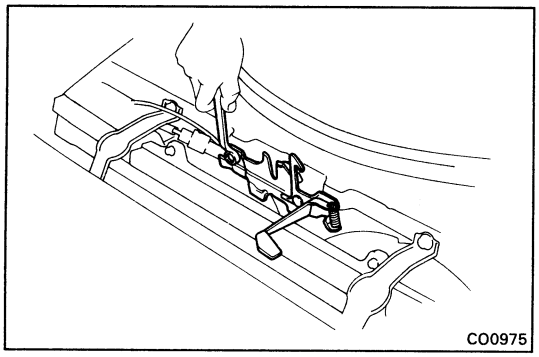

5. **INSTALL FRONT HOOD LOCK**
Install the hood lock with the two bolts.

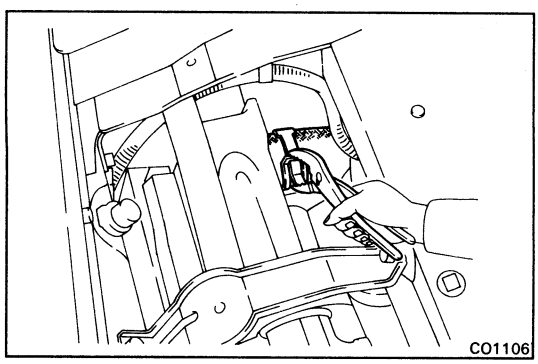

6. **CONNECT RADIATOR HOSES**
7. **CONNECT CABLE TO NEGATIVE TERMINAL OF BATTERY**
8. **FILL WITH ENGINE COOLANT (See page CO-7)**
9. **START ENGINE AND CHECK FOR LEAKS**

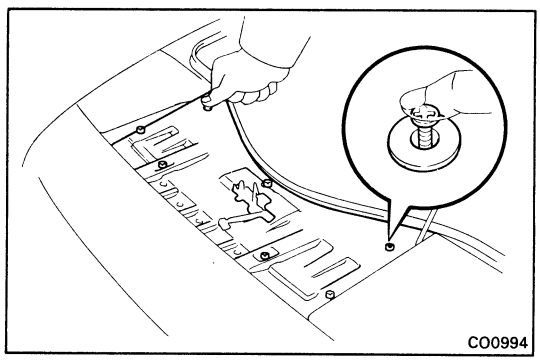

10. **INSTALL UPPER RADIATOR SUPPORT SEAL**
Install the support seal with the seven clips.

11. **INSTALL FRONT LUGGAGE UNDER COVERS**

ELECTRIC COOLING FANS

Radiator Cooling Fans (w/ A/C)

SYSTEM CIRCUIT

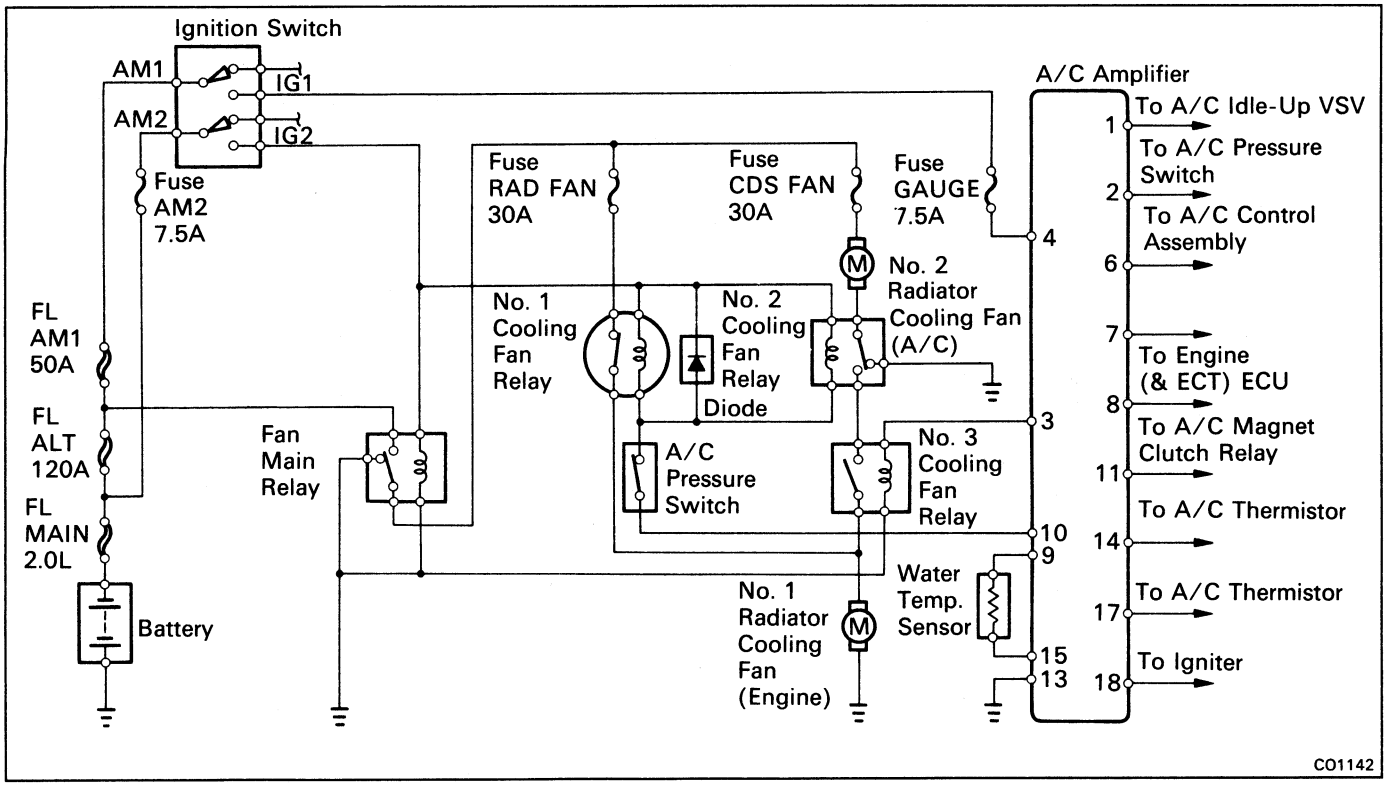

LOCATION OF RADIATOR COOLING FAN COMPONENTS

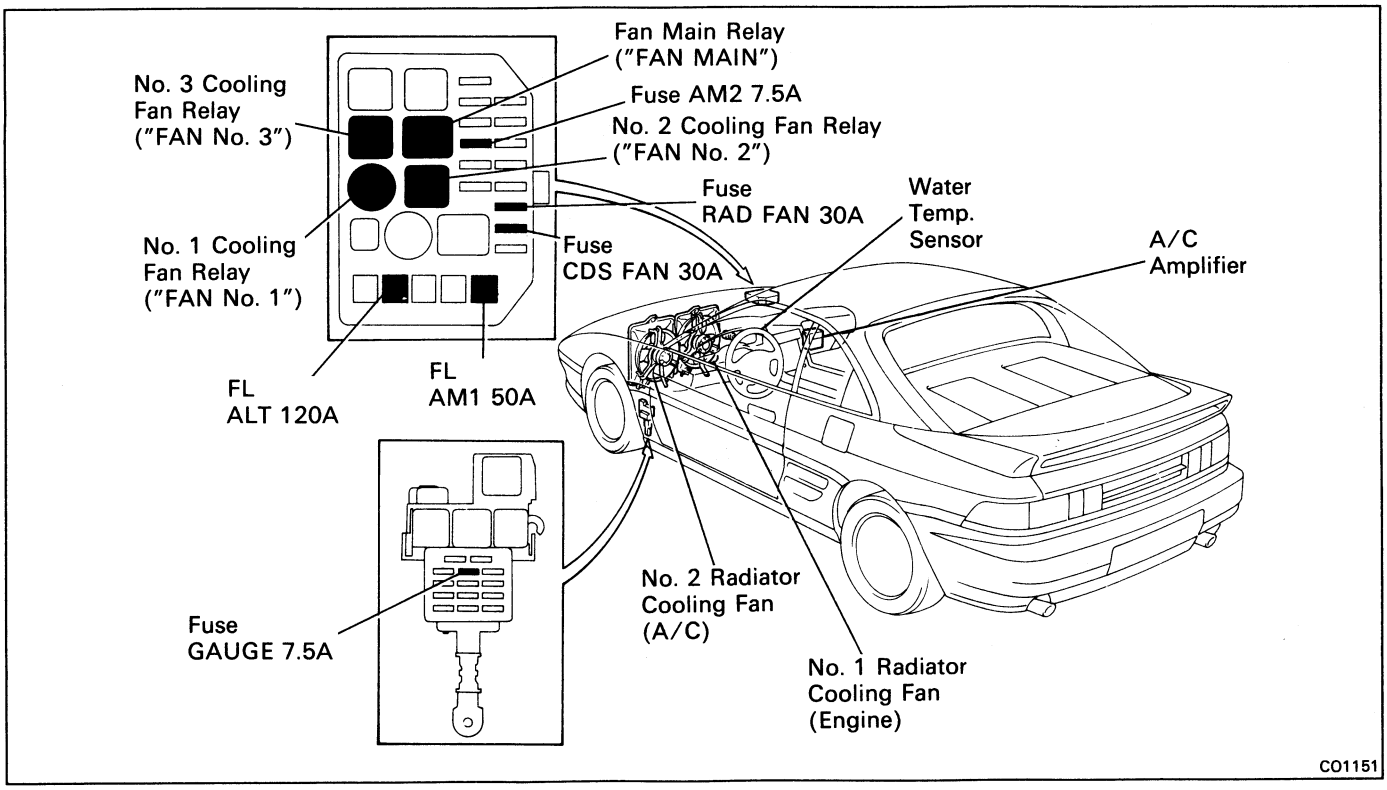

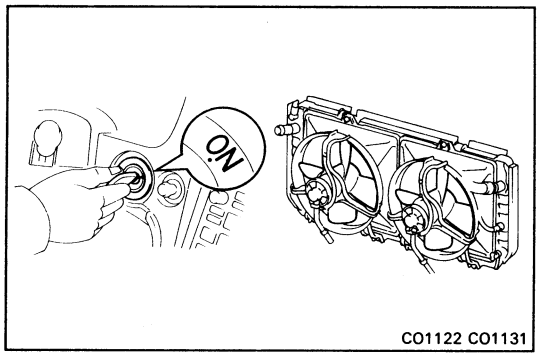

ON-VEHICLE INSPECTION

Low Temperature (Below 85°C (185°F))

1. **TURN IGNITION SWITCH "ON"**

   Check that the cooling fans stops.

   If not, check the cooling fan relays and water temperature sensor, and check for a separated connector or severed wire between the cooling fan relay and water temperature sensor.

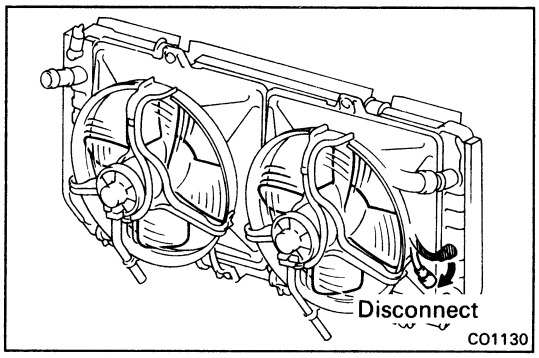

2. **DISCONNECT RADIATOR WATER TEMPERATURE SENSOR CONNECTOR**

   Check that the cooling fans rotates.

   If not, check the fan main relay, cooling fan relays, A/C amplifier, cooling fan and fuses, and check for a short circuit between the cooling fan relay and water temperature sensor.

3. **CONNECT RADIATOR WATER TEMPERATURE SENSOR CONNECTOR**

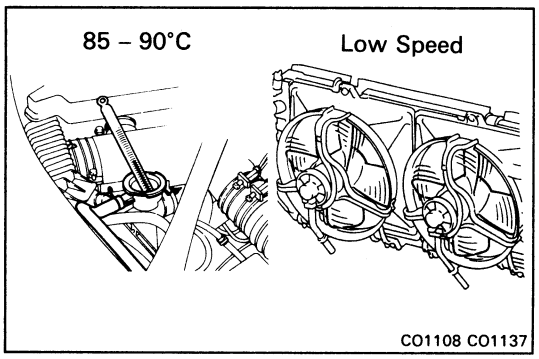

High Temperature (85 – 90°C (185 – 194°F))

4. **START ENGINE**

   (a) Raise coolant temperature to 85 – 90°C (185 – 194°F).

   (b) Check that the cooling fans rotates (at low speed).

   If not, replace the water temperature sensor.

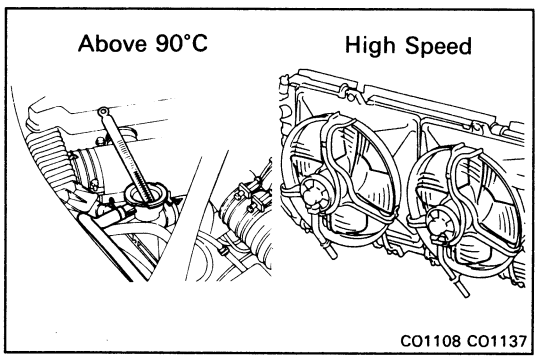

High Temperature (Above 90°C (194°F))

5. **START ENGINE**

   (a) Raise coolant temperature to above 90°C (194°F).

   (b) Check that the cooling fans rotates (at high speed).

   If not, replace the water temperature sensor.

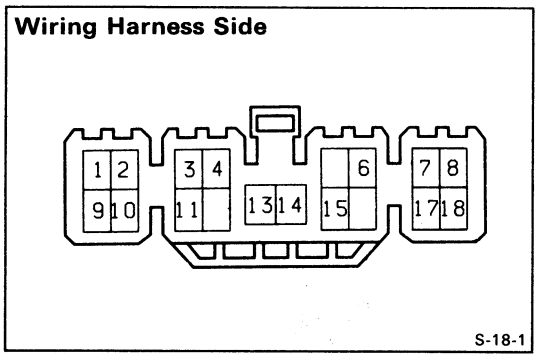

INSPECTION OF RADIATOR COOLING FAN COMPONENTS

1. **INSPECT A/C AMPLIFIER FOR CIRCUIT**

   Disconnect the A/C amplifier connector, and check the connector on the wiring harness side as shown in the chart on the next page.

Check for	Tester connection	Condition		Specified valve
Continuity	3 – Ground	–		Continuity
Voltage	4 – Ground	Ignition switch ON		Battery voltage
Resistance	9 – 15	Coolant temp.	85°C (185°F)	Approx. 1.35 kΩ
			90°C (194°F)	Approx. 1.19 kΩ
			95°C (203°F)	Approx. 1.05 kΩ
Voltage	10 – Ground	Ignition switch ON		Battery voltage
Continuity	13 – Ground	–		Continuity

2. INSPECT FAN MAIN RELAY ("FAN MAIN")
(See page CH-18)

Check the relay in the same way as the Ignition Main Relay.

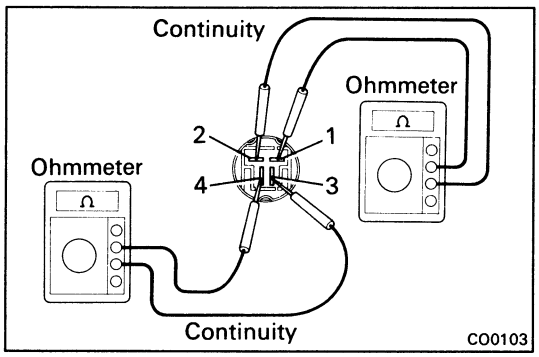

3. INSPECT NO.1 COOLING FAN RELAY ("FAN NO.1")

A. Inspect relay continuity

(a) Using an ohmmeter, check that there is continuity between terminals 1 and 2.

(b) Check that there is continuity between terminals 3 and 4.

If continuity is not as specified, replace the relay.

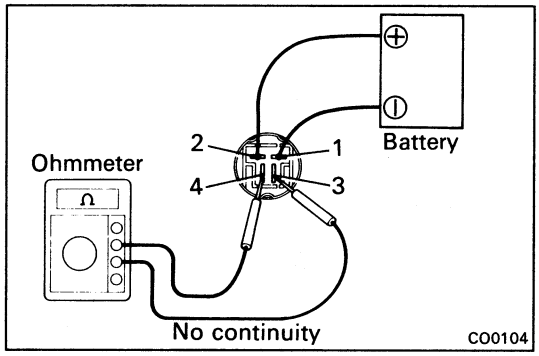

B. Inspect relay operation

(a) Apply battery voltage across terminal 1 and 2.

(b) Using an ohmmeter, check that there is no continuity between terminals 3 and 4.

If operation is not as specified, replace the relay.

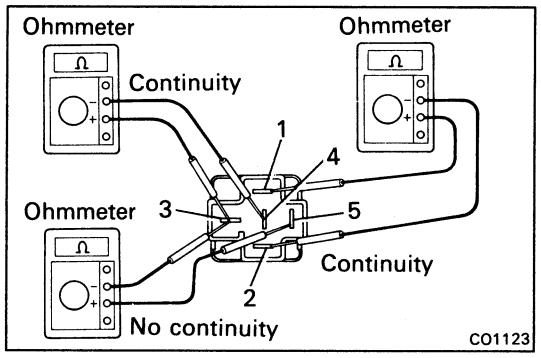

4. INSPECT NO.2 COOLING FAN RELAY ("FAN NO.2")

A. Inspect relay continuity

(a) Using an ohmmeter, check that there is continuity between terminals 1 and 2.

(b) Check that there is continuity between terminals 3 and 4.

(c) Check that there is no continuity between terminals 3 and 5.

If continuity is not as specified, replace the relay.

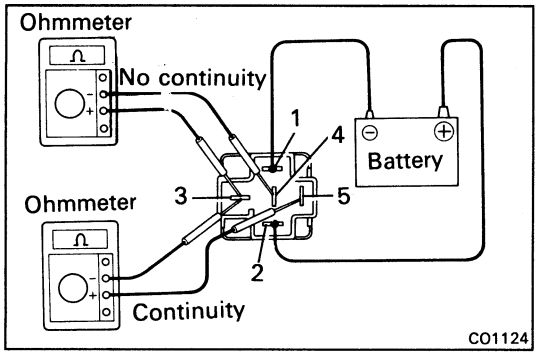

B. Inspect relay operation

(a) Apply battery voltage across terminal 1 and 2.

(b) Using an ohmmeter, check that there is no continuity between terminals 3 and 4.

(c) Check that there is continuity between terminals 3 and 5.

If operation is not as specified, replace the relay.

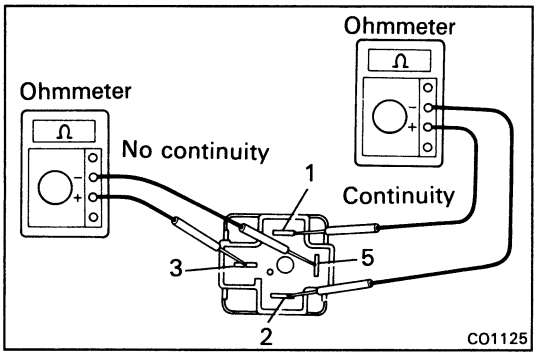

5. INSPECT NO.3 COOLING FAN RELAY ("FAN NO.3")

A. Inspect relay continuity

(a) Using an ohmmeter, check that there is continuity between terminals 1 and 2.

(b) Check that there is no continuity between terminals 3 and 5.

If continuity is not as specified, replace the relay.

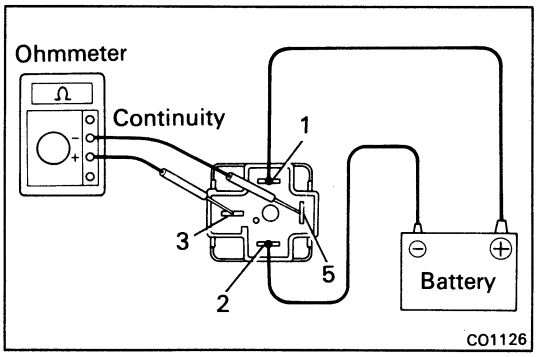

B. Inspect relay operation

(a) Apply battery voltage across terminal 1 and 2.

(b) Using an ohmmeter, check that there is continuity between terminals 3 and 5.

If operation is not as specified, replace the relay.

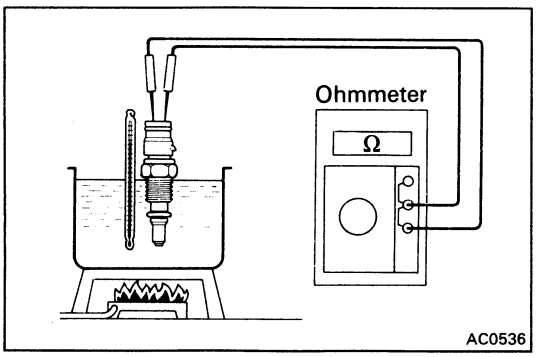

6. INSPECT RADIATOR WATER TEMPERATURE SENSOR

Using an ohmmeter, measure the resistance between the terminals.

Resistance:

Approx. 1.35 kΩ at 85°C (185°F)
Approx. 1.19 kΩ at 90°C (194°F)
Approx. 1.05 kΩ at 95°C (203°F)

If resistance is not as specified, replace the sensor.

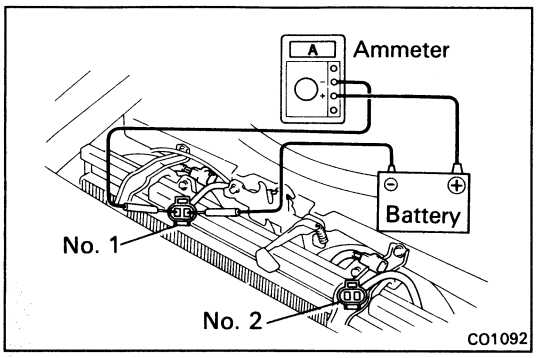

7. INSPECT NO. 1 AND NO. 2 RADIATOR COOLING FANS

(a) Connect battery and ammeter to the cooling fan connector.

(b) Check that the cooling fan rotates smoothly, and check the reading on the ammeter.

Standard amperage: **M/T 5.8 – 7.4 A**
A/T 8.8 – 10.8 A

REMOVAL OF RADIATOR COOLING FANS

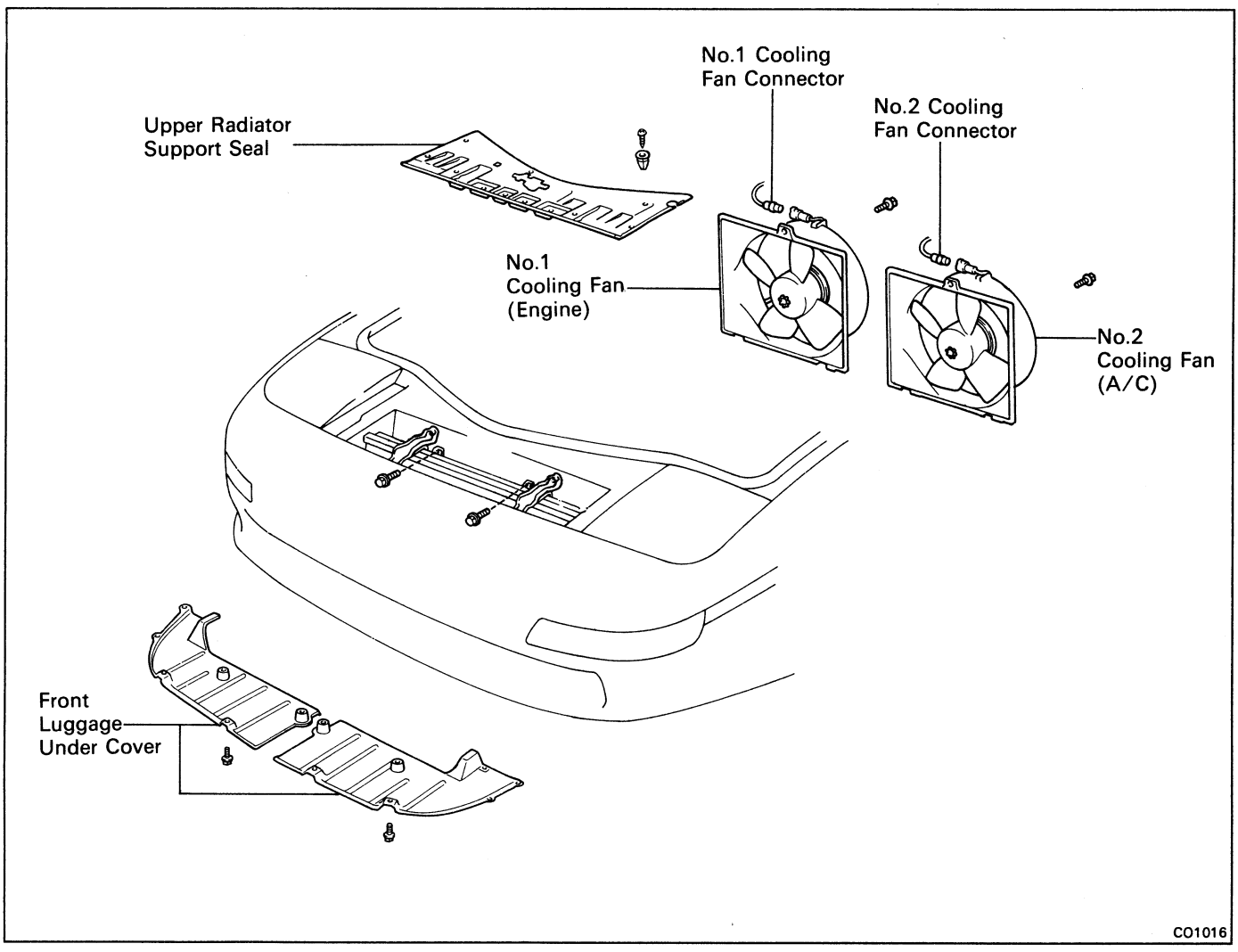

1. **DISCONNECT CABLE FROM NEGATIVE TERMINAL OF BATTERY**

   CAUTION: Work must be started after approx. 20 seconds or longer from the time the ignition switch is turned to the "LOCK" position and the negative (–) terminal cable is disconnected from the battery.

2. **DISCONNECT FRONT LUGGAGE UNDER COVERS**

3. **DISCONNECT UPPER RADIATOR SUPPORT SEAL (See step 4 on page CO-17)**

4. **DISCONNECT RADIATOR COOLING FAN CONNECTORS**

5. **REMOVE RADIATOR COOLING FANS**

   Remove the three bolts and cooling fan. Remove the two cooling fans.

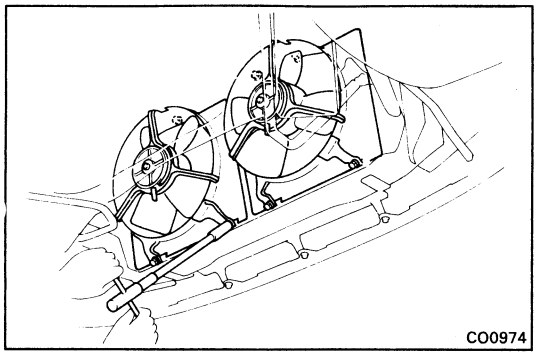

COMPONENTS

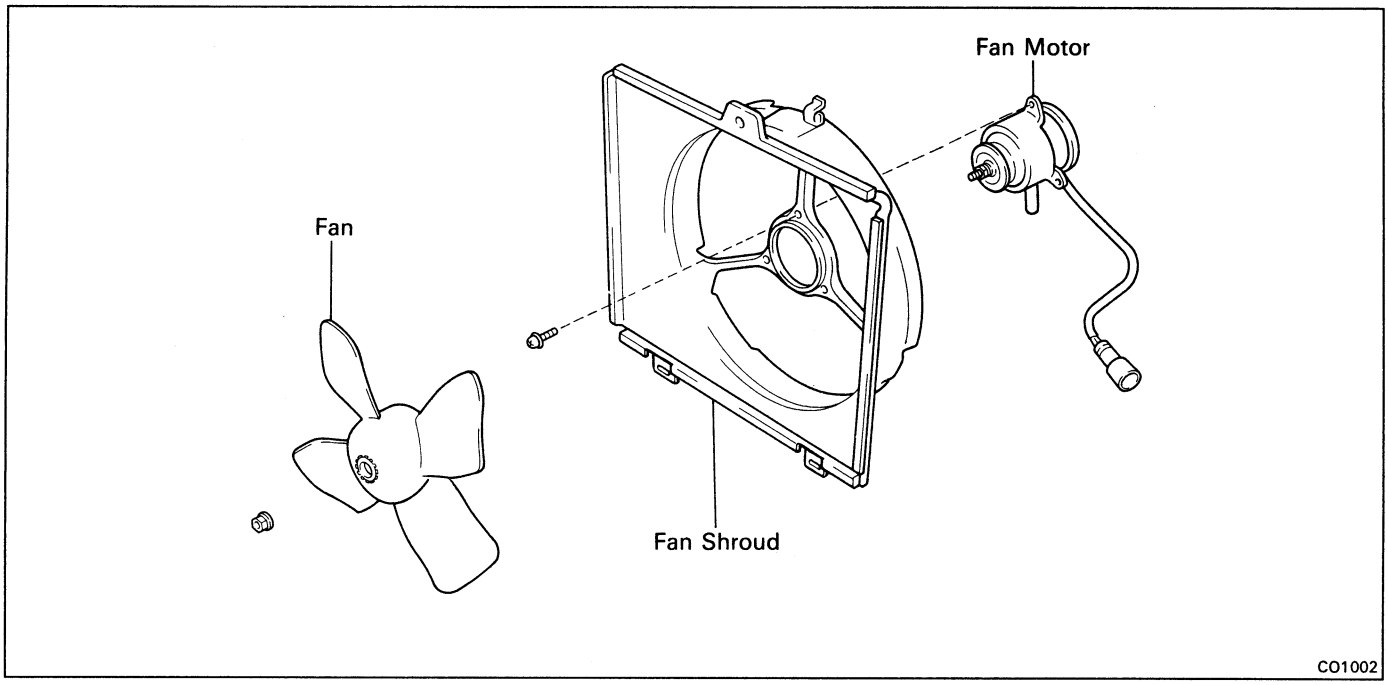

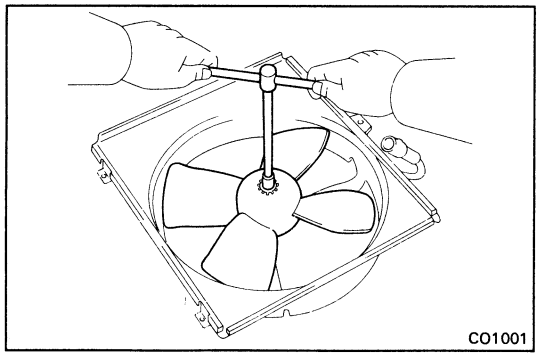

DISASSEMBLY OF RADIATOR COOLING FANS

1. **REMOVE FAN**

   Remove the nut and fan.

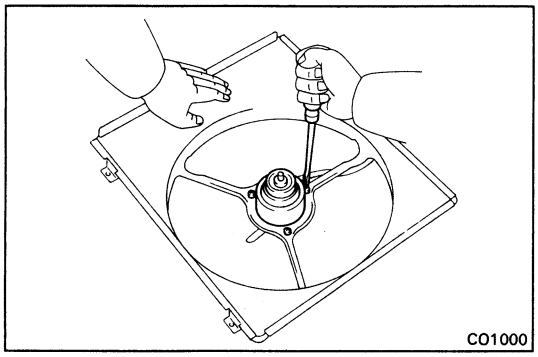

2. **REMOVE FAN MOTOR**

   Remove the three screws and fan motor.

ASSEMBLY OF RADIATOR COOLING FANS

1. **INSTALL FAN MOTOR**
2. **INSTALL FAN**

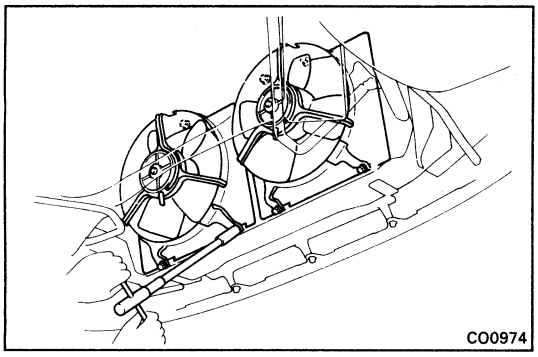

INSTALLATION OF RADIATOR COOLING FANS

(See page CO-25)

1. **INSTALL RADIATOR COOLING FANS**

   Install the cooling fan with the three bolts. Install the two cooling fans.

2. **CONNECT RADIATOR COOLING FAN CONNECTORS**

3. **CONNECT UPPER RADIATOR SUPPORT SEAL**
   (See step 10 on page CO-20)

4. **CONNECT FRONT LUGGAGE UNDER COVERS**

5. **CONNECT CABLE TO NEGATIVE TERMINAL OF BATTERY**

Radiator Cooling Fan (w/o A/C)

SYSTEM CIRCUIT

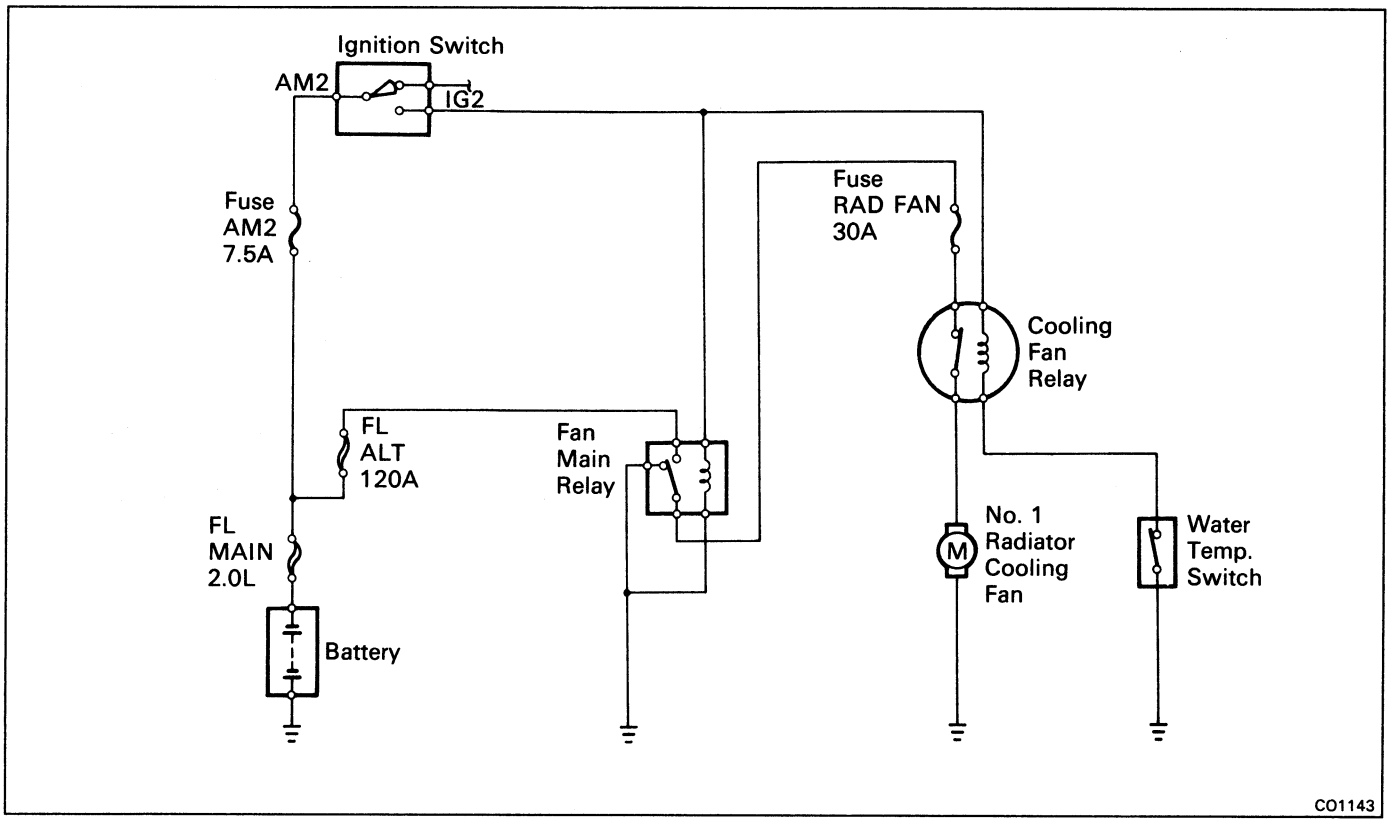

LOCATION OF RADIATOR COOLING FAN COMPONENTS

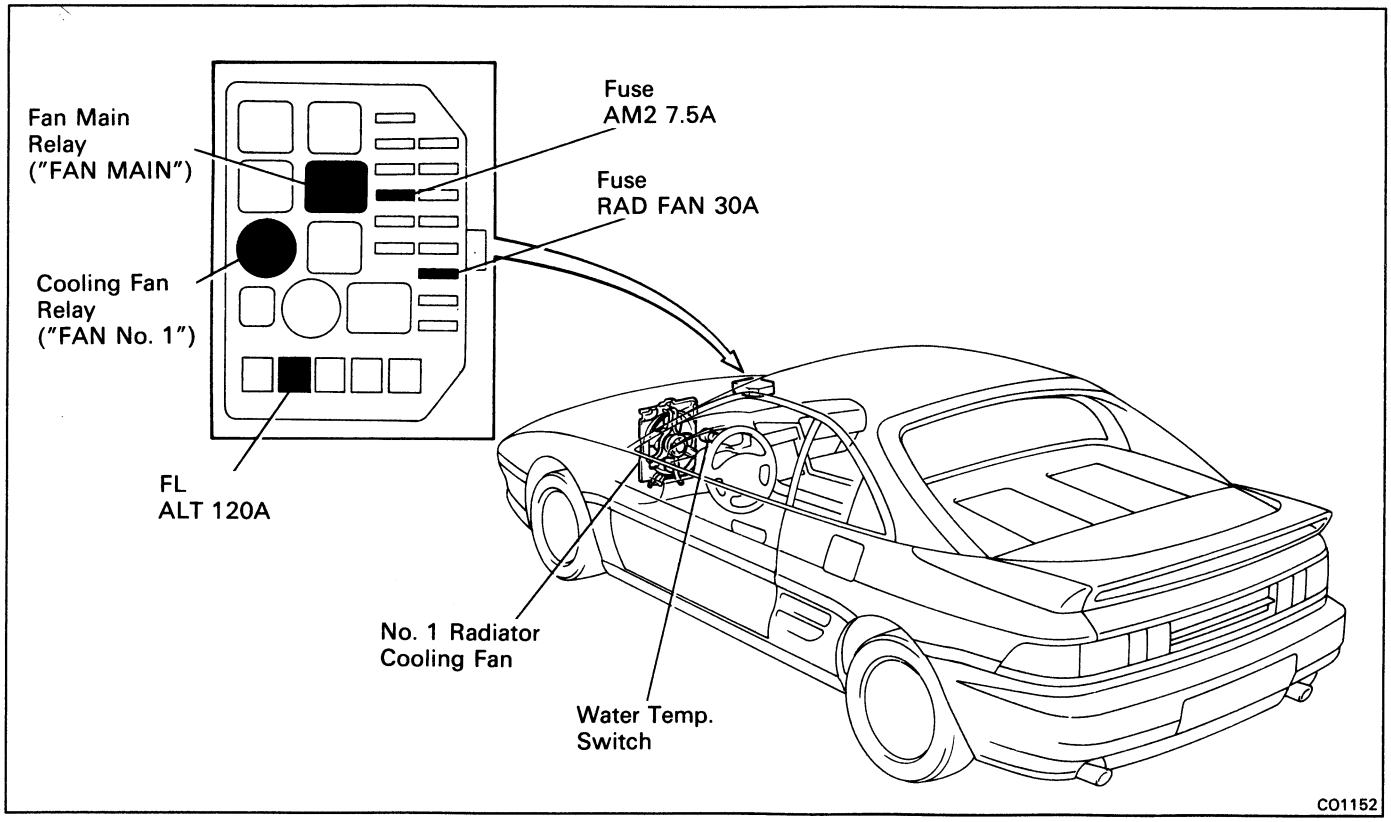

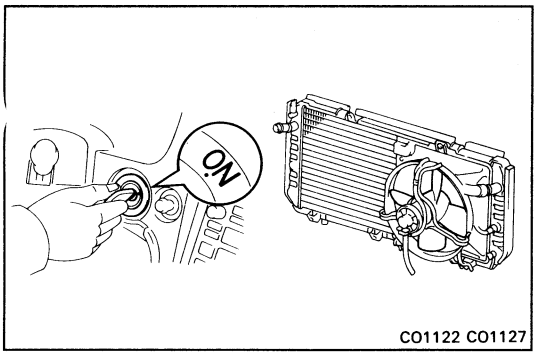

ON-VEHICLE INSPECTION

Low Temperature (Below 83°C (181°F))

1. **TURN IGNITION SWITCH "ON"**

   Check that the cooling fan stops.

   If not, check the cooling fan relays and water temperature switch, and check for a separated connector or severed wire between the cooling fan relay and water temperature switch.

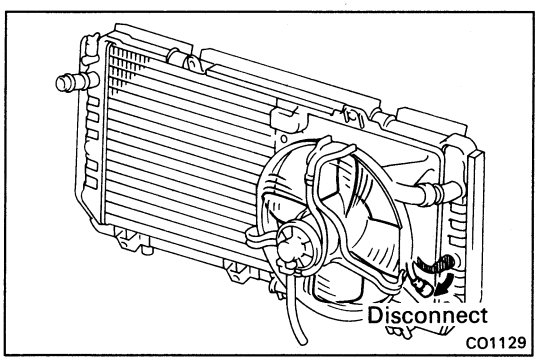

2. **DISCONNECT WATER TEMPERATURE SWITCH CONNECTOR**

   Check that the cooling fan rotates.

   If not, check the fan main relay, cooling fan relays, cooling fan and fuses, and check for a short circuit between the cooling fan relay and water temperature switch.

3. **CONNECT WATER TEMPERATURE SWITCH CONNECTOR**

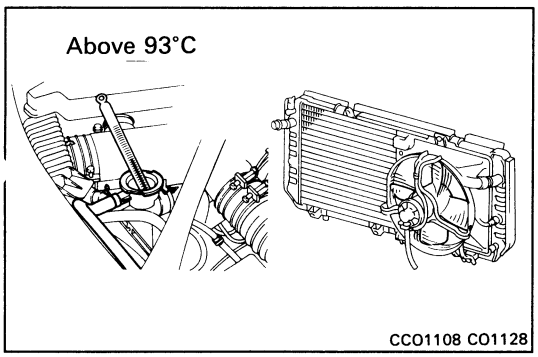

High Temperature (Above 93°C (199°F))

4. **START ENGINE**

   (a) Raise coolant temperature to above 93°C (199°F).

   (b) Check that the cooling fan rotates.

   If not, replace the water temperature switch.

INSPECTION OF RADIATOR COOLING FAN COMPONENTS

1. **INSPECT FAN MAIN RELAY ("FAN MAIN") (See page CH-18)**

   Check the relay in the same way as the Ignition Main Relay.

2. **INSPECT NO.1 COOLING FAN RELAY ("FAN NO.1") (See page CO-23)**

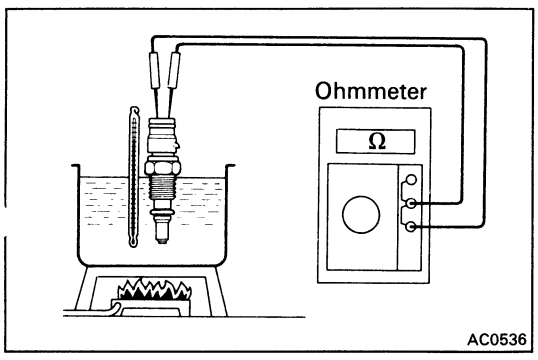

3. **INSPECT RADIATOR WATER TEMPERATURE SWITCH**

   (a) Using an ohmmeter, check that there is no continuity between the terminals when the coolant temperature is above 93°C (199°F).

   (b) Using an ohmmeter, check that there is continuity between the terminals when the coolant temperature is below 83°C (181°F).

   If continuity is not as specified, replace the switch.

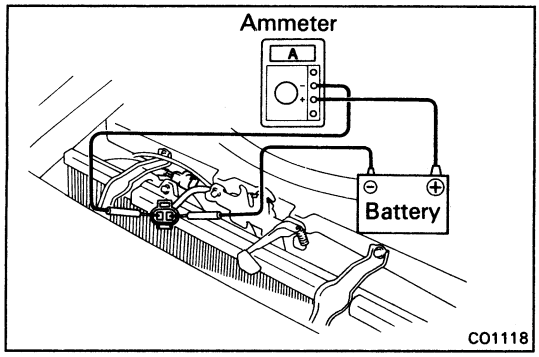

4. **INSPECT NO. 1 RADIATOR COOLING FAN**

(a) Connect battery and ammeter to the cooling fan connector.

(b) Check that the cooling fan rotates smoothly, and check the reading on the ammeter.

Standard amperage: **M/T 5.8 – 7.4 A**
A/T 8.8 – 10.8 A

REMOVAL OF RADIATOR COOLING FAN

REMOVE NO.1 RADIATOR COOLING FAN
(See page CO-25)

DISASSEMBLY AND ASSEMBLY OF RADIATOR COOLING FAN

(See page CO-26)

INSTALLATION OF RADIATOR COOLING FAN

INSTALL NO. 1 RADIATOR COOLING FAN
(See page CO-27)

Engine Compartment Cooling Fan (3S-GTE)

SYSTEM CIRCUIT

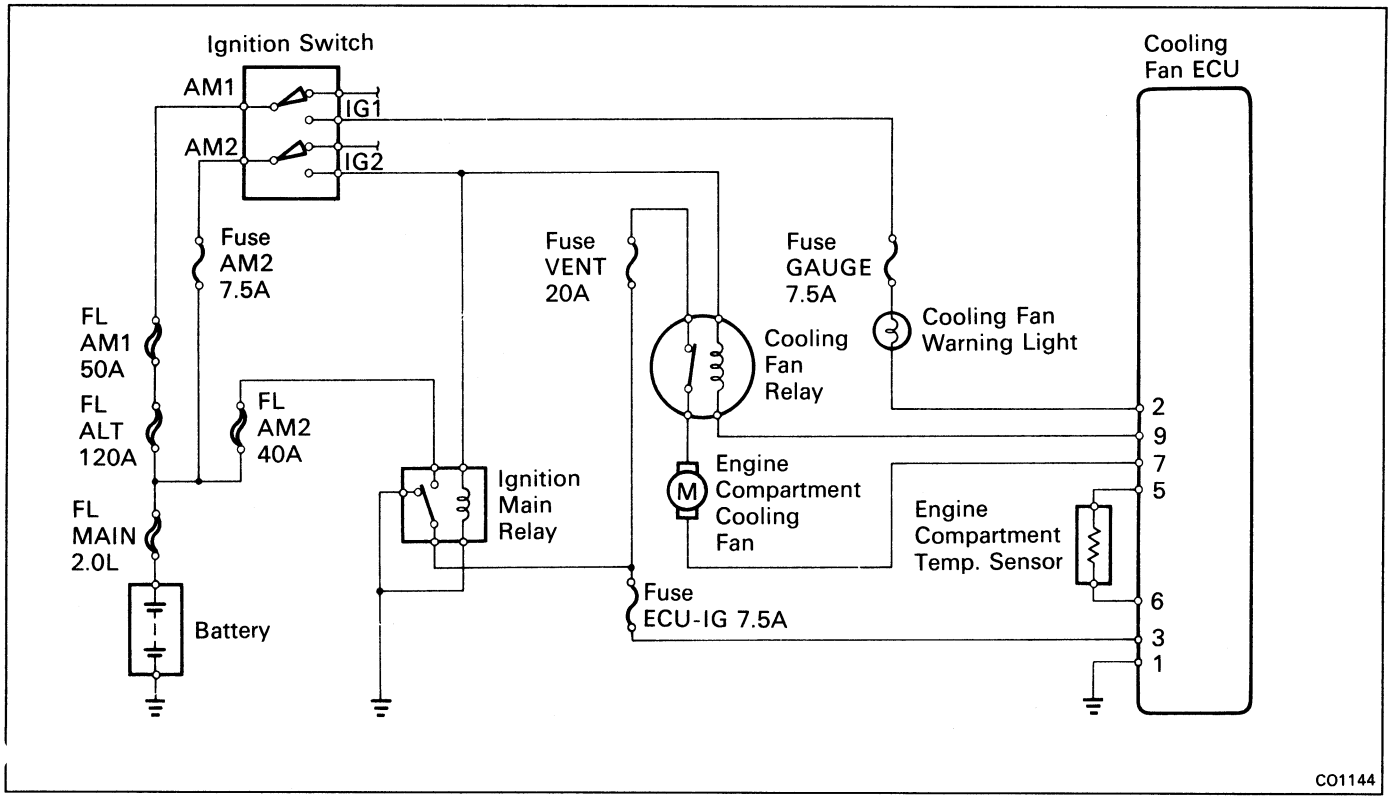

LOCATION OF ENGINE COMPARTMENT COOLING FAN COMPONENTS

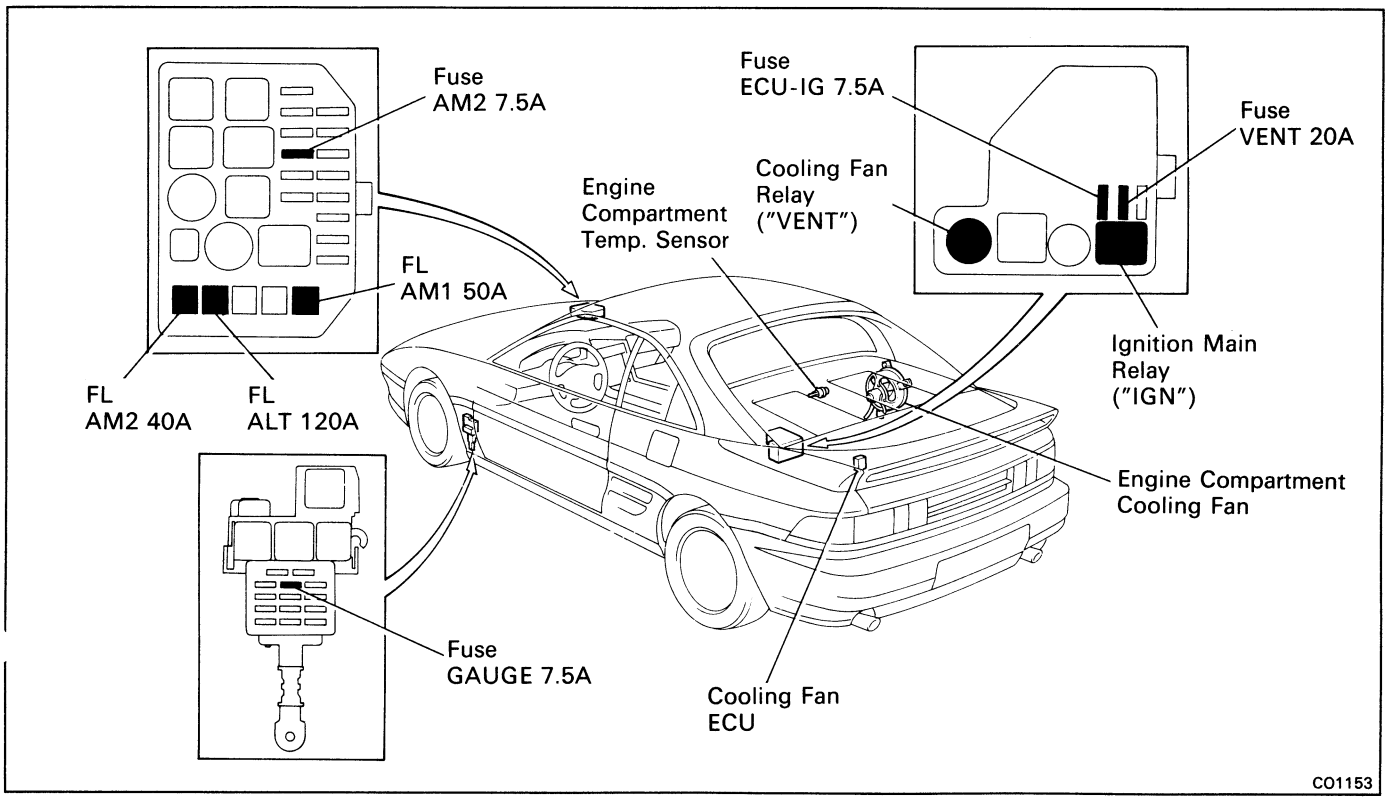

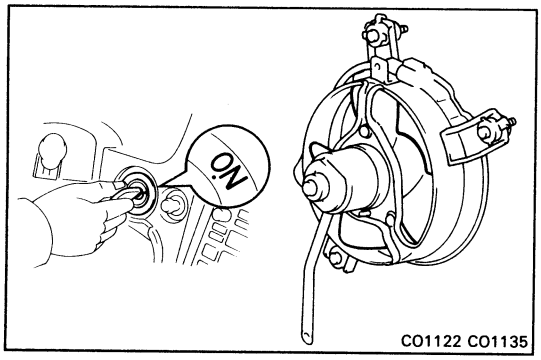

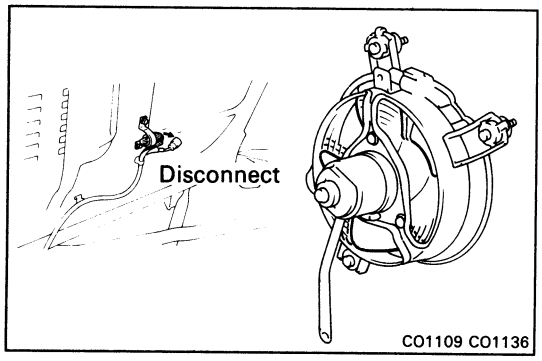

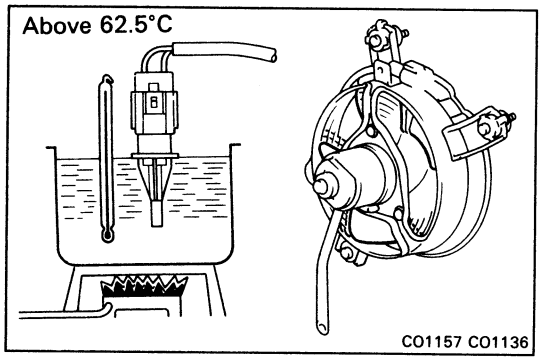

ON-VEHICLE INSPECTION

Low Temperature (Below 45.5°C (113.9°F))

1. **TURN IGNITION SWITCH "ON"**

   Check that the cooling fan stops.

   If not, check the cooling fan relays and engine compartment temperature sensor, and check for a separated connector or severed wire between the cooling fan relay and engine compartment temperature sensor.

2. **DISCONNECT ENGINE COMPARTMENT TEMPERATURE SENSOR CONNECTOR**

   Check that the cooling fan rotates.

   If not, check the ignition main relay, cooling fan relays, cooling fan ECU, cooling fan and fuses, and check for a short circuit between the cooling fan relay and engine compartment temperature sensor.

3. **CONNECT ENGINE COMPARTMENT TEMPERATURE SENSOR CONNECTOR**

High Temperature (Above 62.5°C (144.5°F))

4. **START ENGINE**

   (a) Raise coolant temperature to above 62.5°C (144.5°F).

   (b) Check that the cooling fan rotates.

   If not, replace the engine compartment temperature sensor.

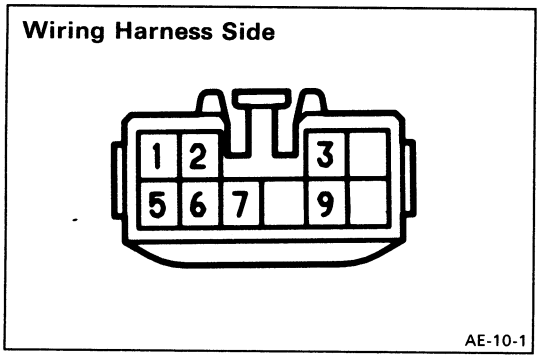

INSPECTION OF ENGINE COMPARTMENT COOLING FAN COMPONENTS

1. INSPECT COOLING FAN ECU FOR CIRCUIT

Disconnect the cooling fan ECU connector, and check the connector on the wiring harness side as shown in the chart.

Check for	Tester connection	Condition		Specified valve
Continuity	1 – Ground	–		Continuity
Voltage	2 – Ground	Ignition switch ON		Battery voltage
Voltage	3 – Ground	Ignition switch ON		Battery voltage
Resistance	5 – 6	Coolant temp.	20°C (68°F)	Approx. 2.45 kΩ
			57.5°C (135.5°F)	Approx. 0.63 kΩ
			80°C (176°F)	Approx. 0.32 kΩ
Voltage	7 – Ground	Ignition switch ON		Battery voltage
Continuity	9 – Ground	Ignition switch ON		Battery voltage

2. INSPECT IGNITION MAIN RELAY ("IGN") (See page CH-18)

3. INSPECT COOLING FAN MAIN RELAY ("VENT") (See page CO-23)

Check the relay the same way as for the No.1 Cooling Fan Relay.

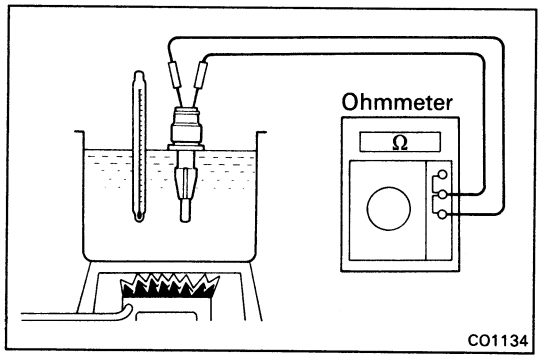

4. INSPECT ENGINE COMPARTMENT TEMPERATURE SENSOR

Using an ohmmeter, measure the resistance between the terminals.

Resistance:

Approx. 2.45 kΩ at 20°C (68°F)
Approx. 0.63 kΩ at 57.5°C (135.5°F)
Approx. 0.32 kΩ at 80°C (176°F)

If resistance is not as specified, replace the sensor.

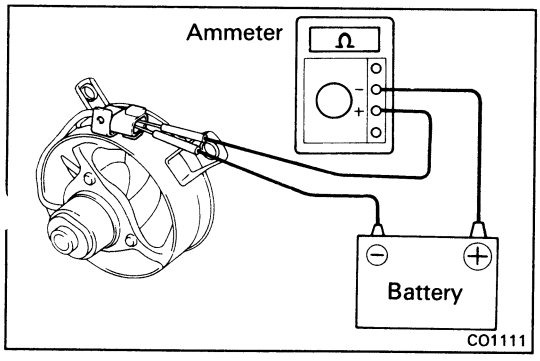

5. INSPECT ENGINE COMPARTMENT COOLING FAN

(a) Connect battery and ammeter to the cooling fan connector.

(b) Check that the cooling fan rotates smoothly, and check the reading on the ammeter.

Standard amperage: 3.1 – 4.3 A

REMOVAL OF ENGINE COMPARMENT COOLING FAN

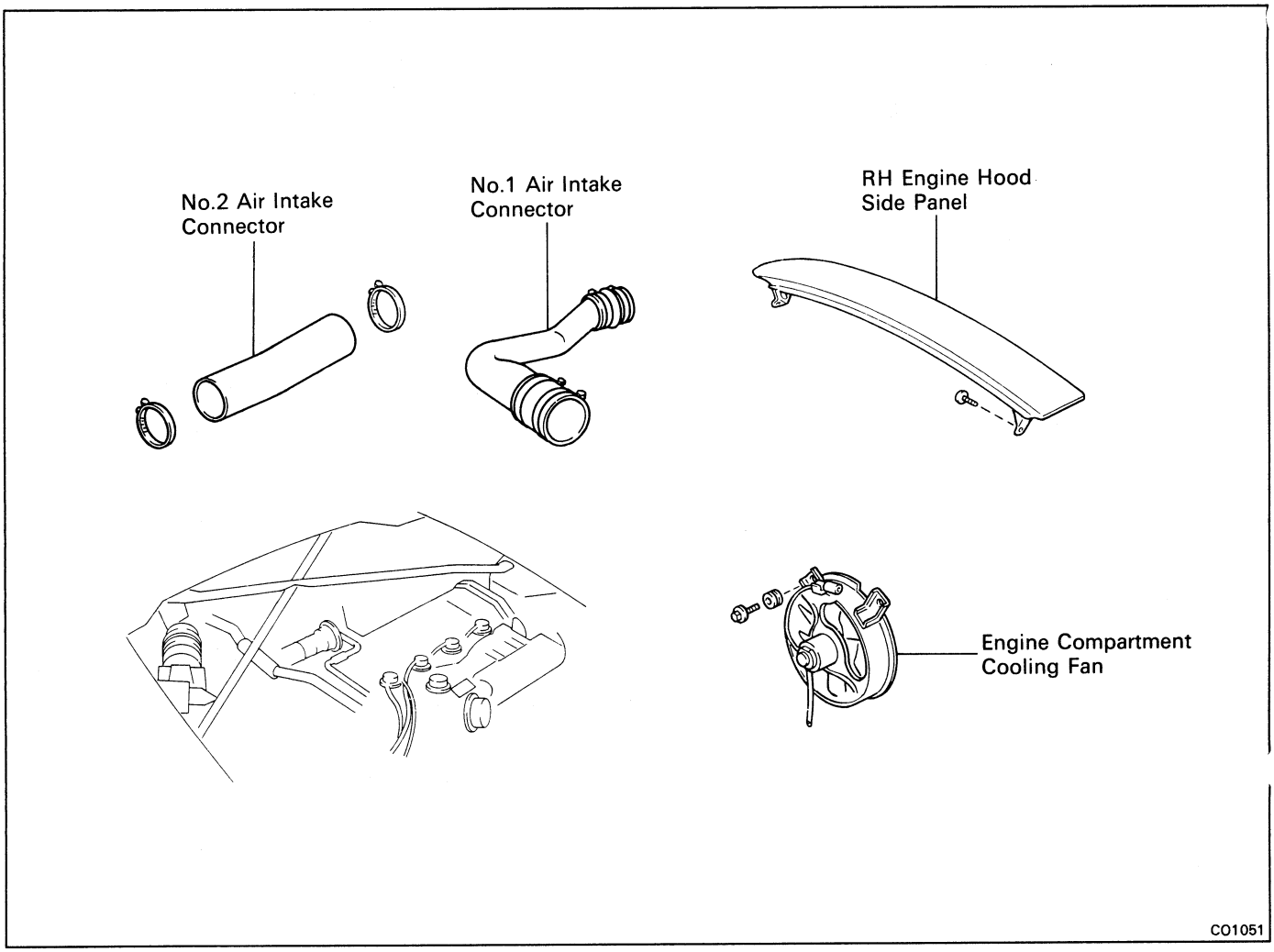

1. **DISCONNECT CABLE FROM NEGATIVE TERMINAL OF BATTERY**

   CAUTION: Work must be started after approx. 20 seconds or longer from the time the ignition switch is turned to the "LOCK" position and the negative (–) terminal cable is disconnected from the battery.

2. **REMOVE RH ENGINE HOOD SIDE PANEL**

3. **REMOVE NO.1 AND NO.2 AIR INTAKE CONNECTORS (See steps 4 and 5 on page TC-20)**

4. **DISCONNECT ENGINE COMPARTMENT COOLING FAN CONNECTOR**

5. **REMOVE ENGINE COMPARTMENT COOLING FAN**

   Loosen the three bolts, and remove the cooling fan.

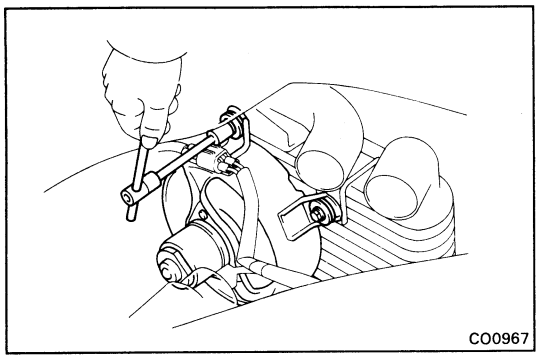

COMPONENTS

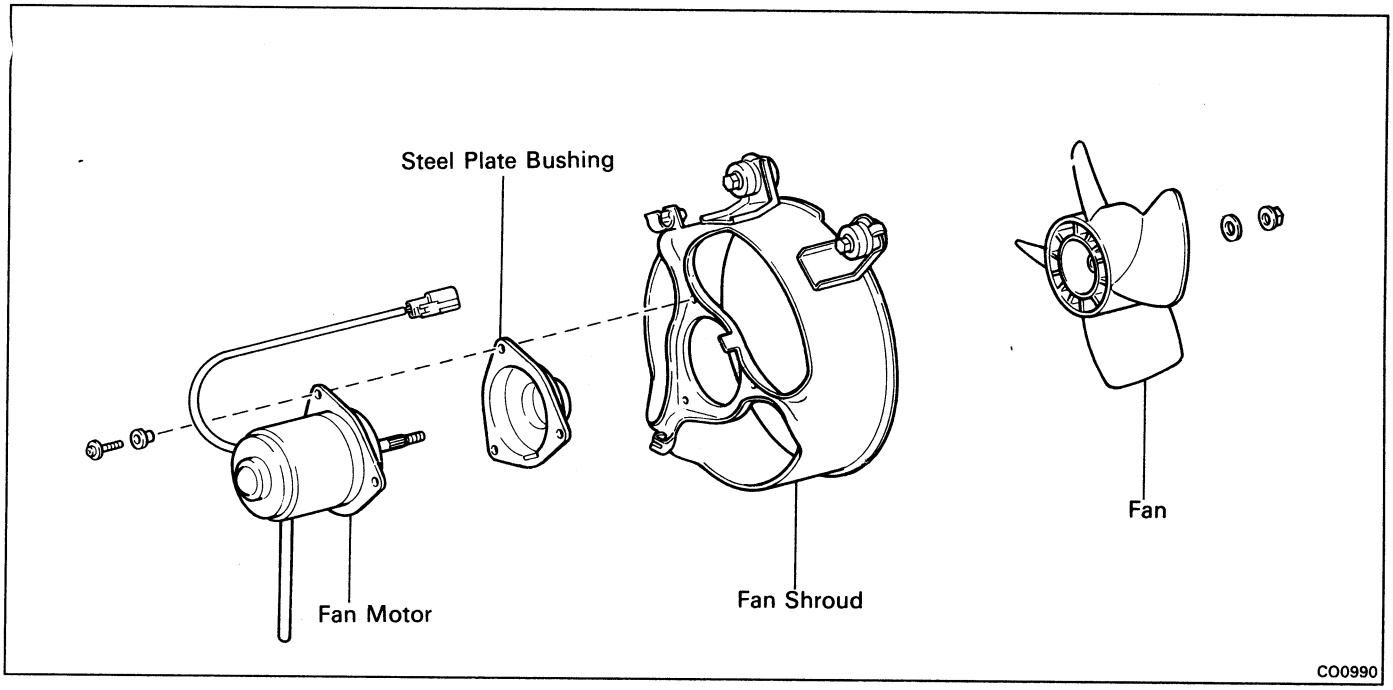

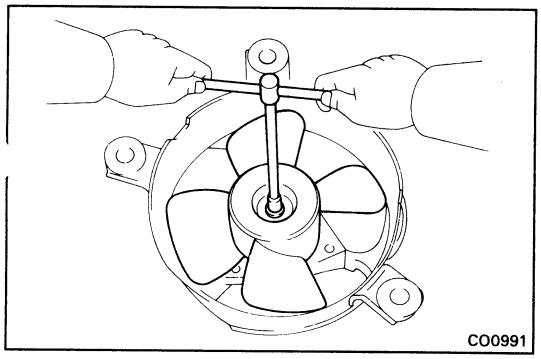

DISASSEMBLY OF ENGINE COMPARTMENT COOLING FAN

1. **REMOVE FAN**

   Remove the nut and fan.

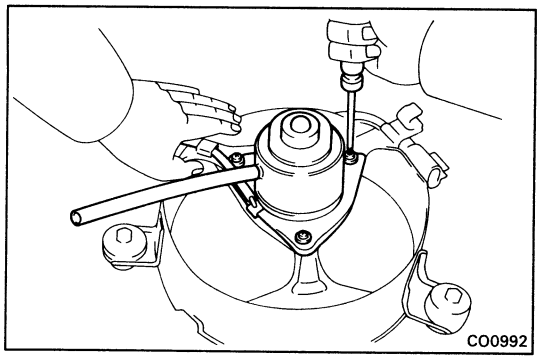

2. **REMOVE FAN MOTOR**

   Remove the three screws and fan motor.

ASSEMBLY OF ENGINE COMPARTMENT COOLING FAN

1. **INSTALL FAN MOTOR**

2. **INSTALL FAN**

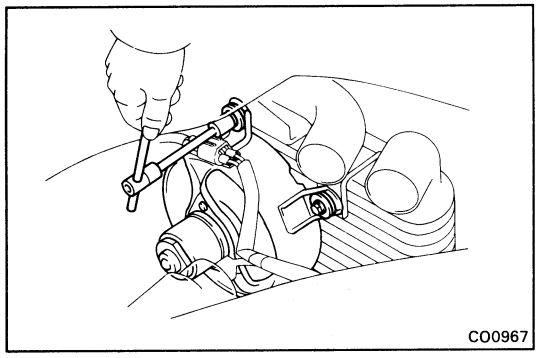

INSTALLATION OF ENGINE COMPARTMENT COOLING FAN

(See page CO-34)

1. **INSTALL ENGINE COMPARTMENT COOLING FAN**
   Install the cooling fan with the three bolts.

2. **CONNECT ENGINE COMPARTMENT COOLING FAN CONNECTOR**

3. **INSTALL NO.1 AND NO.2 AIR INTAKE CONNECTORS**
   (See steps 10 and 11 on page TC-25)

4. **INSTALL RH ENGINE HOOD SIDE PANEL**

5. **CONNECT CABLE TO NEGATIVE TERMINAL OF BATTERY**

LUBRICATION SYSTEM

	Page
DESCRIPTION	LU-2
TROUBLESHOOTING	LU-4
OIL PRESSURE CHECK	LU-5
REPLACEMENT OF ENGINE OIL AND OIL FILTER	LU-6
OIL PUMP	LU-9
OIL COOLER (3S-GTE)	LU-18
OIL COOLER (5S-FE)	LU-23
OIL NOZZLES (3S-GTE)	LU-26

DESCRIPTION

A fully pressurized, fully filtered lubrication system has been adopted for this engine.

3S-GTE

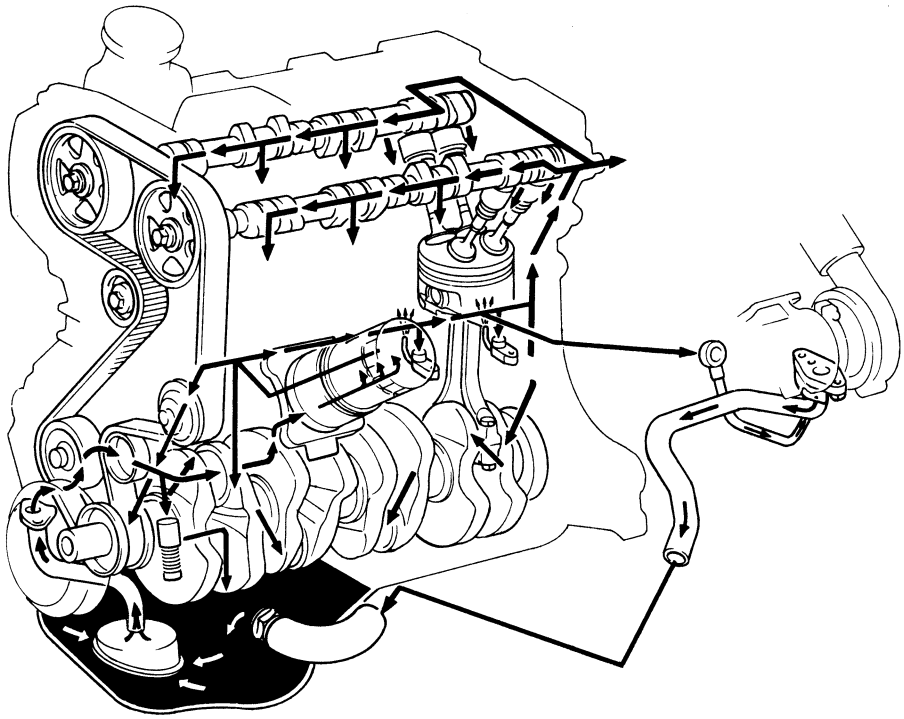

LU0932

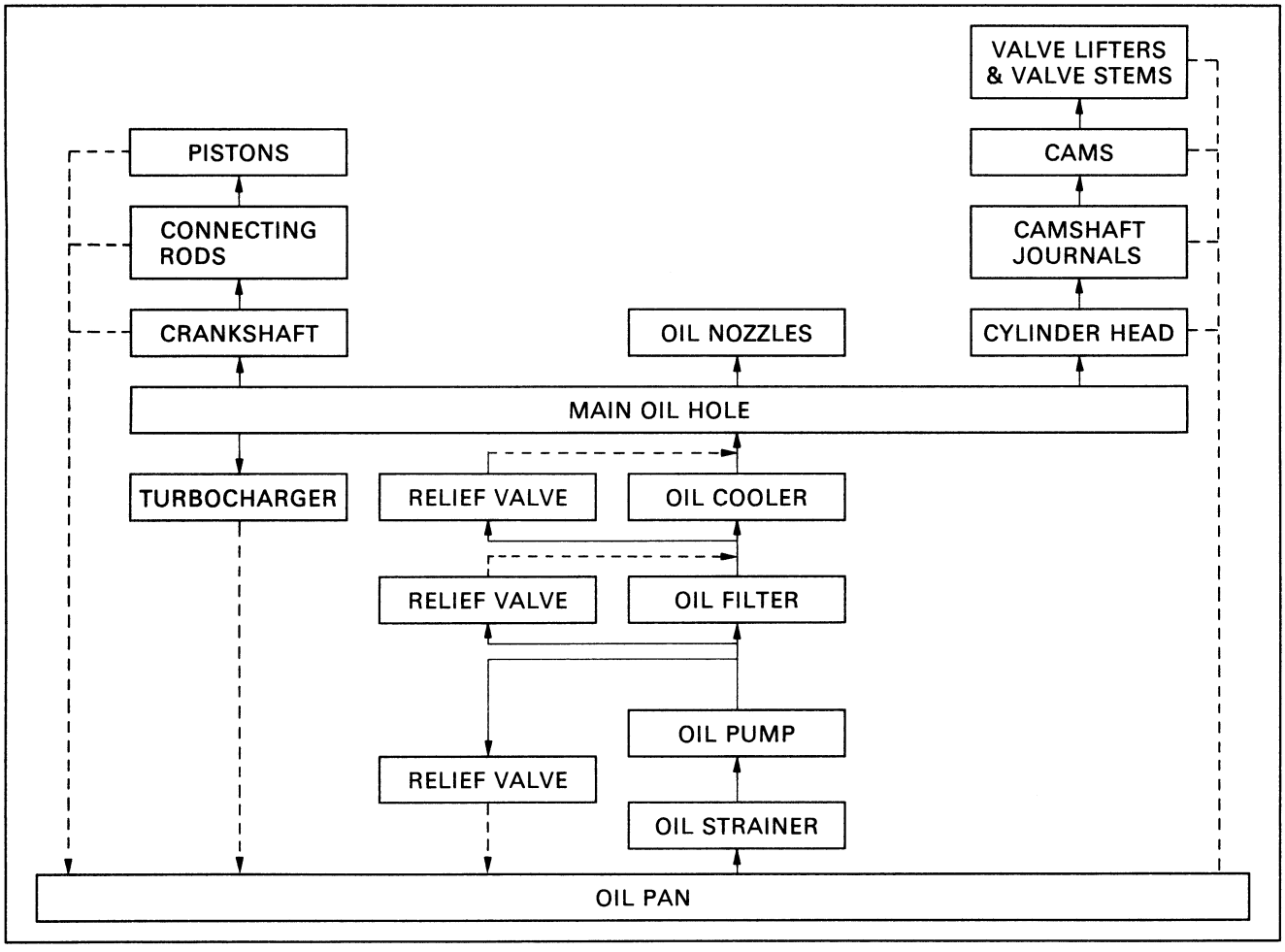

5S-FE

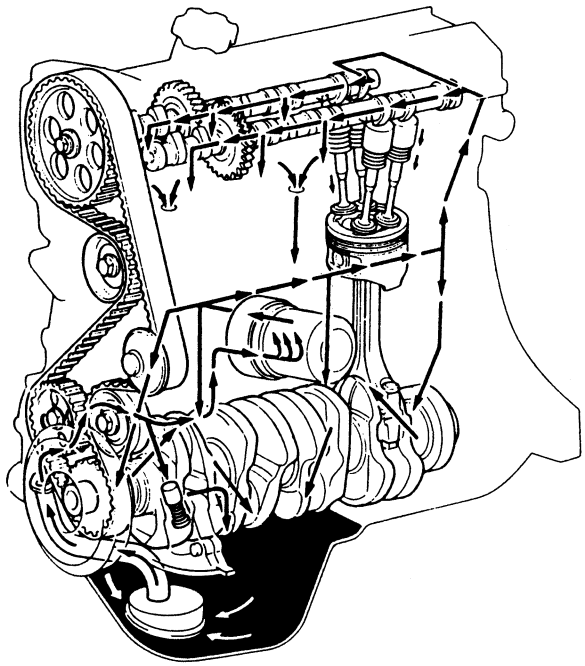

LU0910

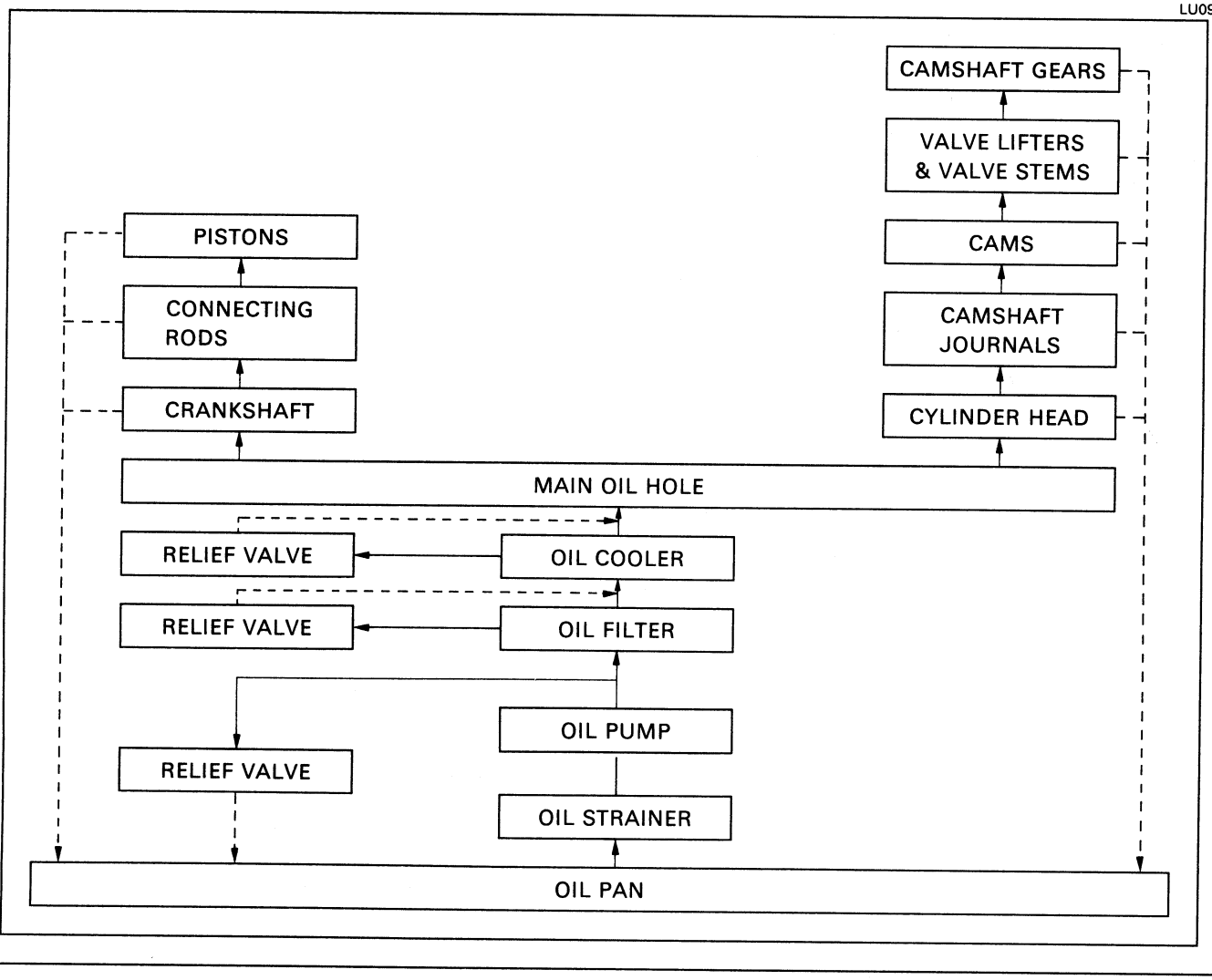
CAMSHAFT GEARS
VALVE LIFTERS & VALVE STEMS
CAMS
CAMSHAFT JOURNALS
CYLINDER HEAD
PISTONS
CONNECTING RODS
CRANKSHAFT
MAIN OIL HOLE
RELIEF VALVE
OIL COOLER
RELIEF VALVE
OIL FILTER
OIL PUMP
RELIEF VALVE
OIL STRAINER
OIL PAN

A pressure feeding lubrication system has been adopted to supply oil to the moving parts of this engine. The lubrication system consists of an oil pan, oil pump, oil filter and other external parts which supply oil to the moving parts in the engine block. The oil circuit is shown in the illustration at the top of the previous page. Oil from the oil pan is pumped up by the oil pump. After it passes through the oil filter, it is fed through the various oil holes in the crankshaft and cylinder block. After passing through the cylinder block and performing its lubricating function, the oil is returned by gravity to the oil pan. A dipstick on the center left side of the cylinder block is provided to check the oil level.

OIL PUMP

The oil pump pumps up oil from the oil pan and sends it under pressure to the various parts of the engine. An oil strainer is mounted in front of the inlet to the oil pump. The oil pump itself is a trochoid type pump, inside of which there is a drive rotor and a driven rotor. When the drive rotor rotates, the driven rotor rotates in the same direction, and since the axis of the driven rotor shaft is different from the center of the driven rotor, the space between the two rotors is changed as they rotate. Oil is drawn in when the space is wide and is discharged when the space is narrow.

OIL PRESSURE REGULATOR

At high engine speeds, the engine oil supplied by the oil pump exceeds the capacity of the engine to utilize it. For that reason, the oil pressure regulator works to prevent an oversupply of oil. During normal oil supply, a coil spring and valve keep the bypass closed, but when too much oil is being fed, the pressure become extremely high, overpowering the force of the spring and opening the valves. This allows the excess oil to flow through the valve and return to the oil pan.

OIL FILTER

The oil filter is a full flow type filter with a built-in paper filter element. Particles of metal from wear, airborn dirt, carbon and other impurities can get into the oil during use and could cause accelerated wear or sizing if allowed to circulate through the engine. The oil filter, integrated into the oil line, removes these impurities as the oil passes through it. The filter is mounted outside the engine to simplify replacement of the filter element. A relief valve is also included ahead of the filter element to relieve the high oil pressure in case the filter element becomes clogged with impurities. The relief valve opens when the oil pressure overpowers the force of the spring. Oil passing through the relief valve by-passes the oil filter and flows directly into the main oil hole in the engine.

TROUBLESHOOTING

Problem	Possible cause	Remedy	Page
Oil leakage	Cylinder head, cylinder block or oil pump body damaged or cracked	Repair as necessary	
	Oil seal faulty	Replace oil seal	EM-160, 161 LU-10
	Gasket faulty	Replace gasket	
Low oil pressure	Oil leakage	Repair as necessary	
	Relief valve faulty	Repair relief valve	LU-10
	Oil pump faulty	Repair oil pump	LU-10
	Engine oil poor quality	Replace engine oil	LU-7
	Crankshaft bearing faulty	Replace bearing	EM-134, 182
	Connecting rod bearing faulty	Replace bearing	EM-134, 182
	Oil filler clogged	Replace oil filler	LU-7
High oil pressure	Relief valve faulty	Repair relief valve	LU-10

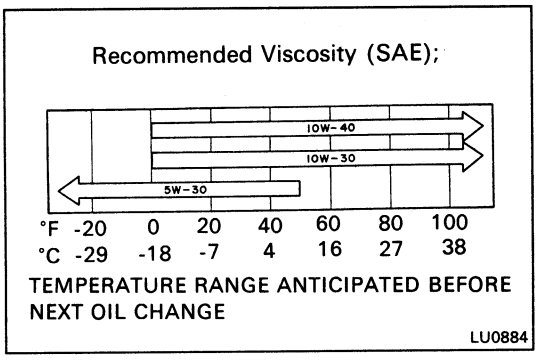

OIL PRESSURE CHECK

1. CHECK ENGINE OIL QUALITY

Check the oil for deterioration, entry of water, discoloring or thinning.

If the quality is poor, replace the oil.

Oil grade: API grade SG, multigrade, fuelefficient and recommended viscosity oil

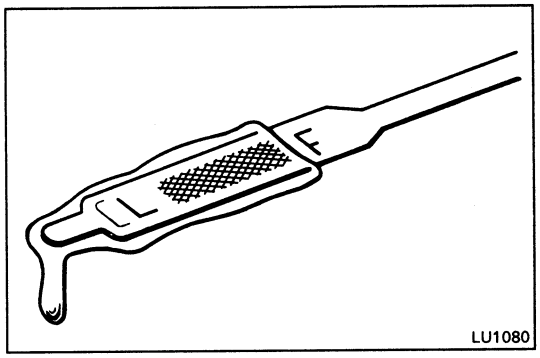

2. CHECK ENGINE OIL LEVEL

The oil level should be between the "L" and "F" marks on the dipstick.

If low, check for the leakage and add oil up to "F" mark.

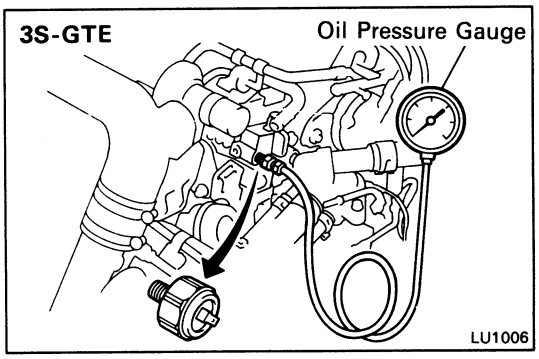

3. REMOVE OIL PRESSURE SWITCH

4. INSTALL OIL PRESSURE GAUGE

5. WARM UP ENGINE

Allow the engine to warm up to normal operating temperature.

6. CHECK OIL PRESSURE

Oil pressure:

At idling	**0.3 kg/cm² (4.3 psi, 29 kPa) or more**
At 3,000 rpm	**2.5 – 5.0 kg/cm² (36 – 71 psi, 245 – 490 kPa)**

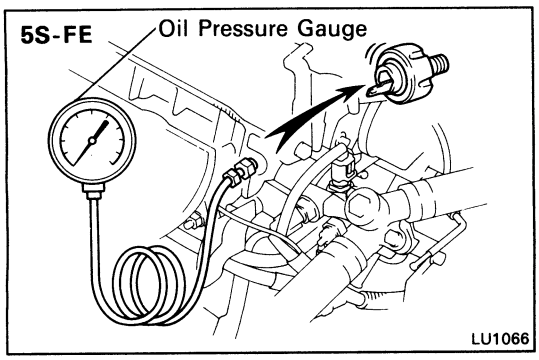

7. REMOVE OIL PRESSURE GAUGE, AND REINSTALL OIL PRESSURE SWITCH

Apply adhesive to two or three threads of the oil pressure switch.

Adhesive: Part No. 08833-00080, THREE BOND 1344, LOCTITE 242 or equivalent

8. START ENGINE AND CHECK FOR LEAKS

REPLACEMENT OF ENGINE OIL AND OIL FILTER

NOTICE:

- **Prolonged and repeated contact with mineral oil will result in the removal of natural fats from the skin, leading to dryness, irritation and dermatitis. In addition, used engine oil contains potentially harmful contaminants which may cause skin cancer.**
- **Care should be taken, therefore, when changing engine oil, to minimize the frequency and length of time your skin is exposed to used engine oil. Protective clothing and gloves, that cannot be penetrated by oil, should be worn. The skin should be thorougthly washed with soap and water, or use waterless hand cleaner, to remove any used engine oil. Do not use gasoline, thinners, or solvents.**
- **In order to preserve the environment, used oil and used oil filter must be disposed of only at designated disposal sites.**

1. DRAIN ENGINE OIL

(a) Remove the oil filler cap.

(b) Remove the oil drain plug, and drain the oil into a container.

2. REPLACE OIL FILTER

(a) Remove the air duct from the alternator.

(b) Using SST, remove the oil filter.

SST 09228-06500

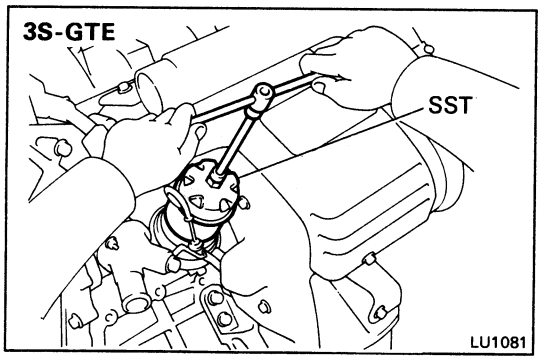

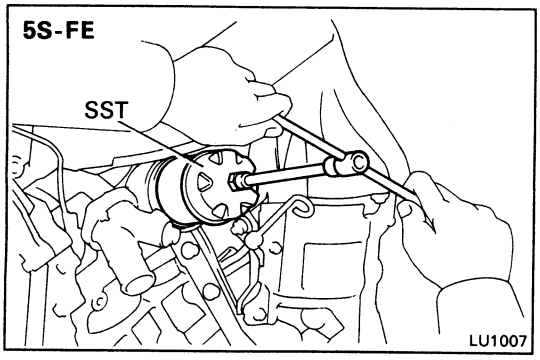

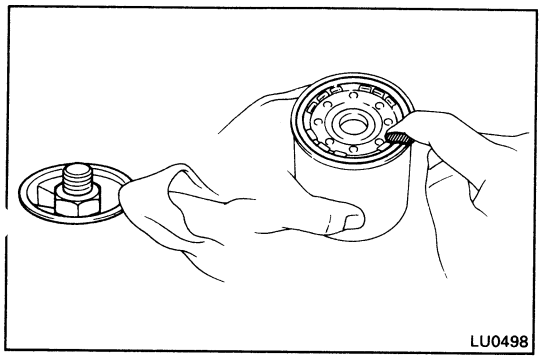

(c) Check and clean the oil filter installation surface.

(d) Apply clean engine oil to the gasket of a new oil filter.

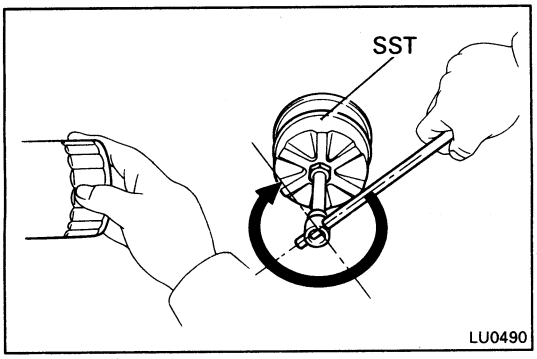

(e) Lightly screw the oil filter into place, and tighten it until the gasket contacts the seat.

(f) Using SST, tighten it an additional 3/4 turn.

SST 09228-06500

(g) Reinstall the air duct to the alternator.

3. FILL WITH ENGINE OIL

(a) Clean and install the oil drain plug with a new gasket.

Torque:
3S-GE 200 kg-cm (14 ft-lb, 20 N·m)
5S-FE 400 kg-cm (29 ft-lb, 39 N·m)

(b) Fill with new engine oil.

Oil grade: See page LU-4

Capacity (3S-GTE):
Drain and refill
w/ Oil filter change
3.9 liters (4.1 US qts, 3.4 Imp. qts)
w/o Oil filter change
3.6 liters (3.8 US qts, 3.2 Imp. qts)
Dry fill 4.3 liters (4.5 US qts, 3.8 Imp. qts)

Capacity (5S-FE):
Drain and refill
w/ Oil filter change
4.0 liters (4.2 US qts, 3.5 Imp. qts)
w/o Oil filter change
3.8 liters (4.0 US qts, 3.3 Imp. qts)
Dry fill 4.4 liters (4.7 US qts, 3.9 Imp. qts)

(c) Reinstall the oil filler cap.

4. START ENGINE AND CHECK FOR LEAKS

5. RECHECK ENGINE OIL LEVEL (See page LU-6)

OIL PUMP

REMOVAL OF OIL PUMP

HINT: When repairing the oil pump, the oil pan and strainer should be removed and cleaned.

3S-GTE

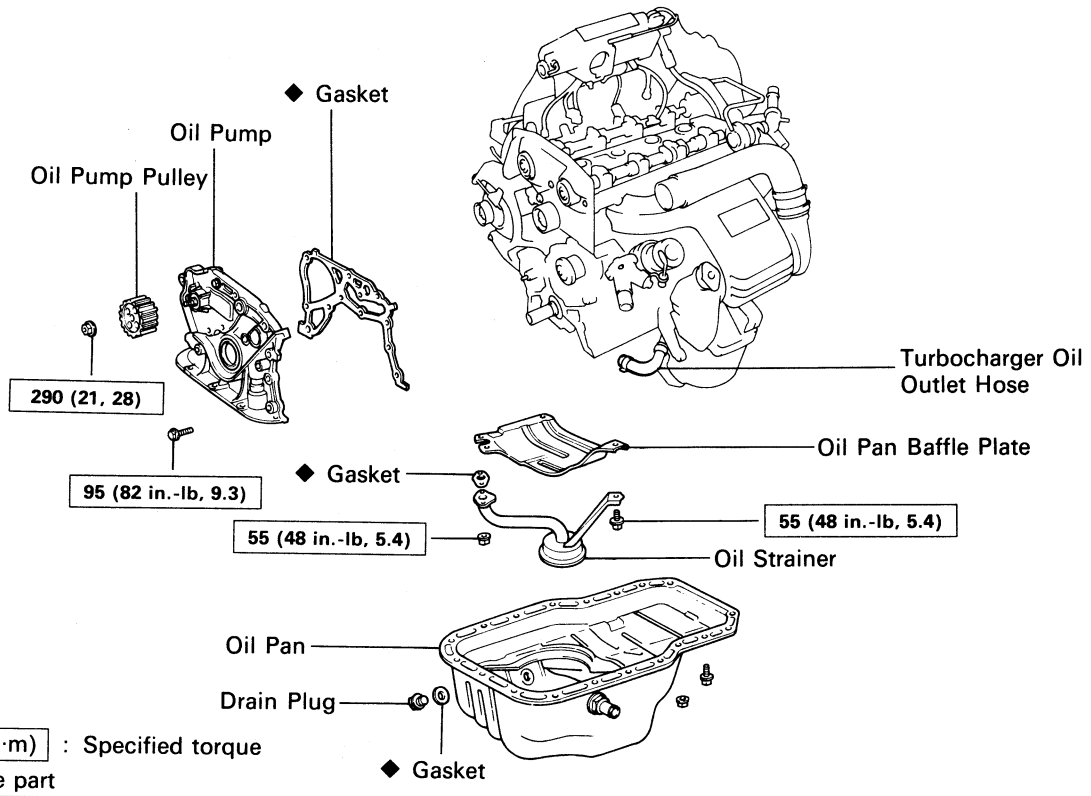

kg-cm (ft-lb, N·m) : Specified torque
◆ Non-reusable part

LU1074

5S-FE

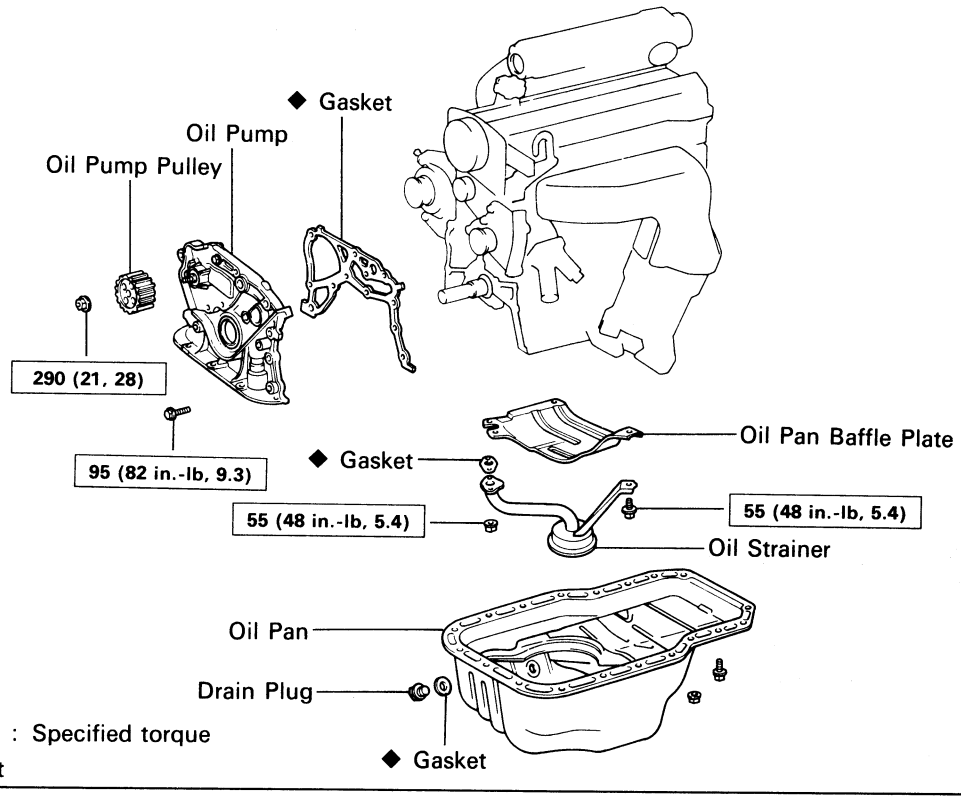

kg-cm (ft-lb, N·m) : Specified torque
◆ Non-reusable part

LU1083

1. **DISCONNECT CABLE FROM NEGATIVE TERMINAL OF BATTERY**

   CAUTION: Work must be started after approx. 20 seconds or longer from the time the ignition switch is turned to the "LOCK" position and the negative (–) terminal cable is dosconnected from the battery.

2. **DRAIN ENGINE OIL (See page LU-6)**

3. **REMOVE ENGINE UNDER COVERS**

4. **REMOVE RH ENGINE HOOD SIDE PANEL**

5. **REMOVE SUSPENSION UPPER BRACE**
   3S-GTE (See step 8 on page EM-134)
   5S-FE (See step 8 on page EM-182)

6. **REMOVE CRUISE CONTROL ACTUATOR (w/ CRUISE CONTROL SYSTEM) AND ACCELERATOR LINKAGE**
   3S-GTE (See step 13 on page EM-135)
   5S-FE (See step 11 on page EM-182)

7. **REMOVE FRONT EXHAUST PIPE**
   3S-GTE (See steps 30 and 31 on pages EM-138 and 139)
   5S-FE (See step 29 on page EM-187)

8. **(3S-GTE)**
   REMOVE A/C COMPRESSOR WITHOUT DISCONNECTING HOSES
   (See step 12 on page TC-21)

9. **(5S-FE)**
   REMOVE A/C BELT IDLER PULLEY
   (See step 31 on page EM-187)

10. **(3S-GTE)**
    REMOVE CATALYTIC CONVERTER
    (See step 14 on page EM-64)

11. **(3S-GTE)**
    REMOVE INTERCOOLER
    (See steps 4, 5, 7 to 13 on pages TC-20 to 22)

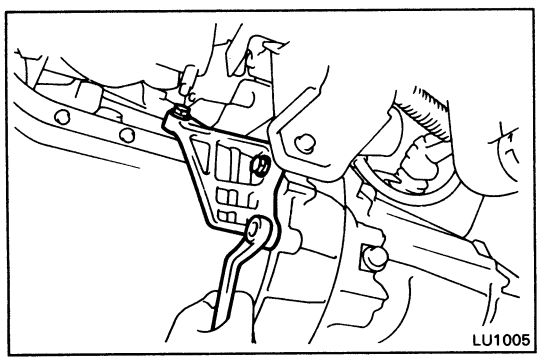

12. **REMOVE STIFFENER PLATE**
    Remove the three bolts and stiffener plate.

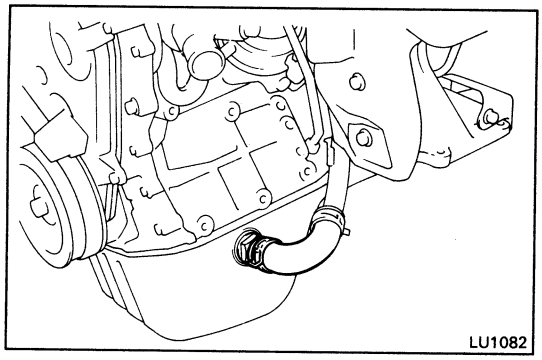

13. DISCONNECT TURBOCHARGER OIL OUTLET HOSE FROM OIL PAN

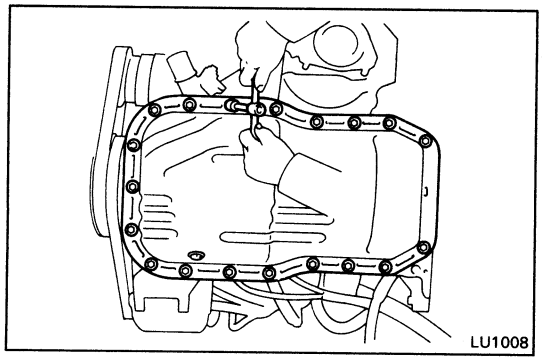

14. REMOVE OIL PAN

(a) Remove the dipstick.

(b) Remove the seventeen bolts and two nuts.

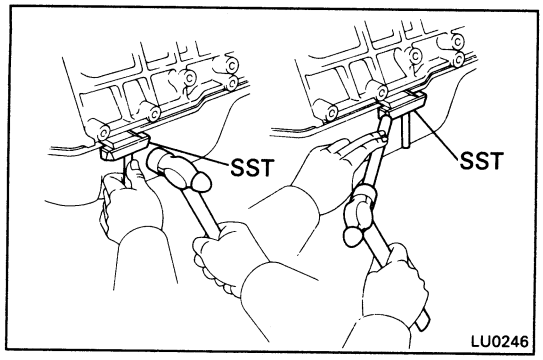

(c) Insert the blade of SST between the cylinder block and oil pan, cut off applied sealer and remove the oil pan.

SST 09032-00100

NOTICE:

- **Do not use SST for the oil pump body side and rear oil seal retainer.**
- **Be careful not to damage the oil pan flange.**

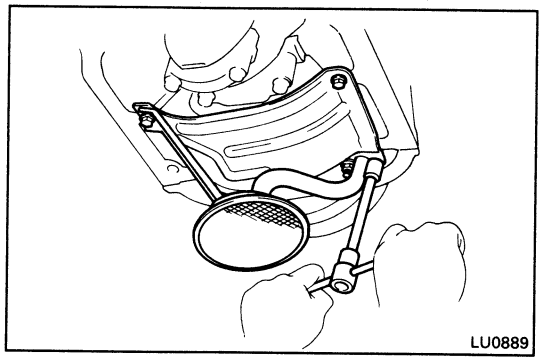

15. REMOVE OIL STRAINER AND BAFFLE PLATE

Remove the two bolts, two nuts, oil strainer, baffle plate and gasket.

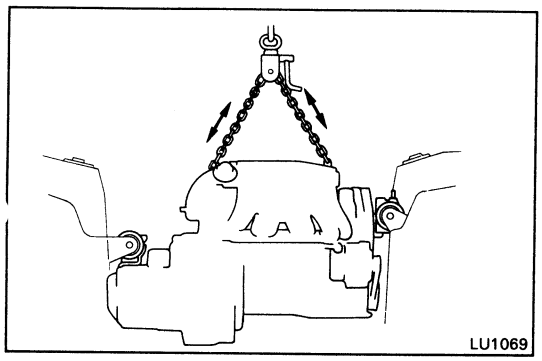

16. SUSPEND ENGINE WITH ENGINE CHAIN HOIST

17. REMOVE TIMING BELT

3S-GTE (See steps 7, 8 and 10 to 22 on pages EM-26 to 31)

5S-FE (See steps 6 to 8 and 10 to 21 on pages EM-47 to 52)

18. REMOVE NO.2 IDLER PULLEY, CRANKSHAFT TIMING PULLEY AND OIL PUMP PULLEY

3S-GTE (See steps 24 and 24 on pages EM-42 and 43)

5S-FE (See steps 24 and 24 on pages EM-42 and 43)

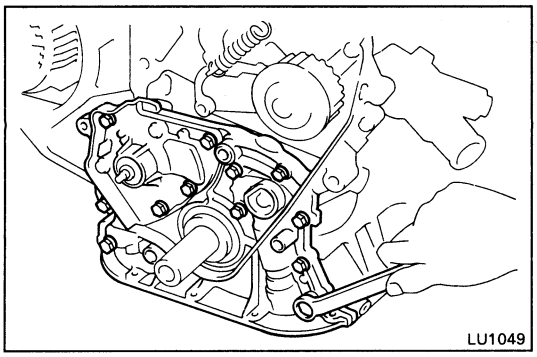

19. REMOVE OIL PUMP

(a) Remove the twelve bolts.

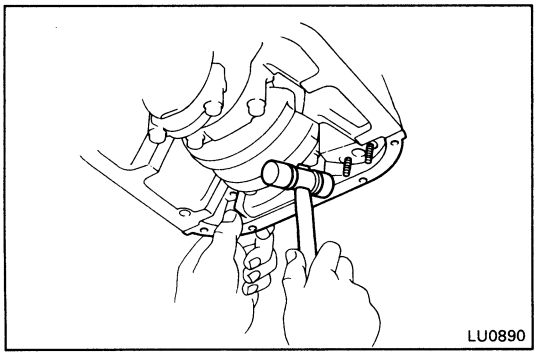

(b) Using a plastic-faced, remove the oil pump by careful tapping the oil pump dody.

(c) Remove the gasket.

COMPONENTS

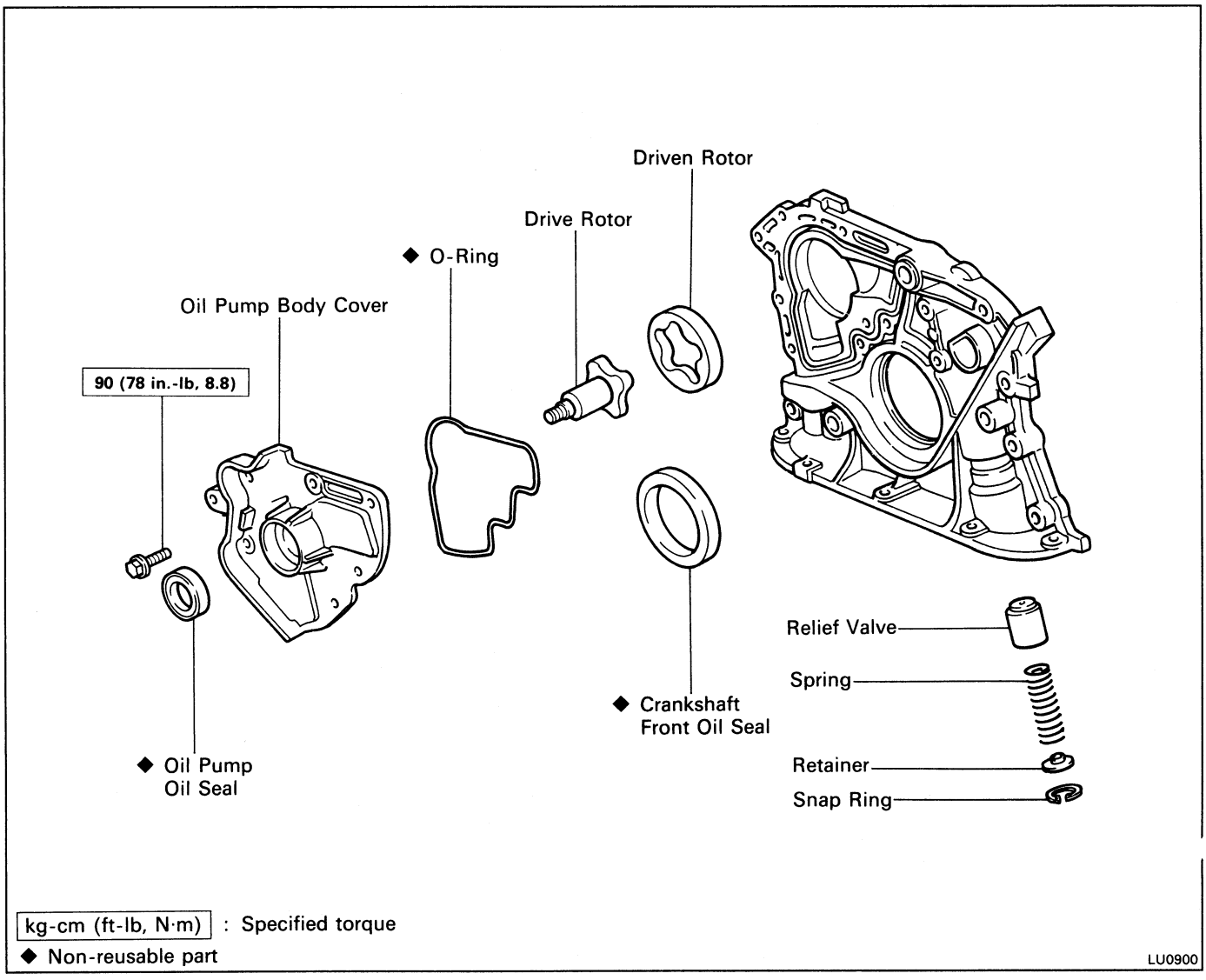

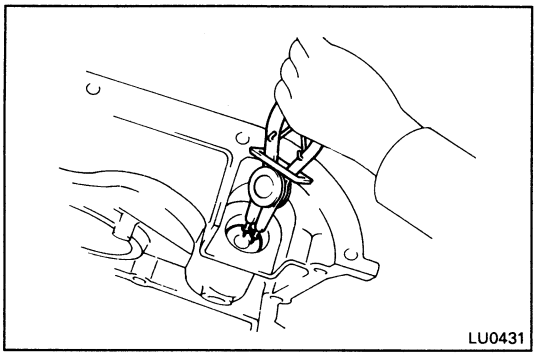
LU0431

DISASSEMBLY OF OIL PUMP

(See page LU-12)

1. REMOVE RELIEF VALVE

(a) Using snap ring pliers, remove the snap ring.

(b) Remove the retainer, spring and relief valve.

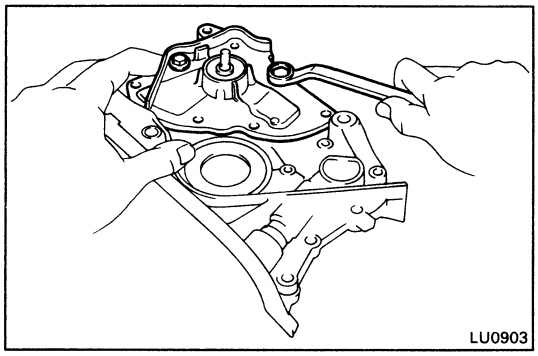
LU0903

2. REMOVE DRIVE AND DRIVEN ROTORS

Remove the two bolts, pump body cover, O-ring, the drive and driven rotors.

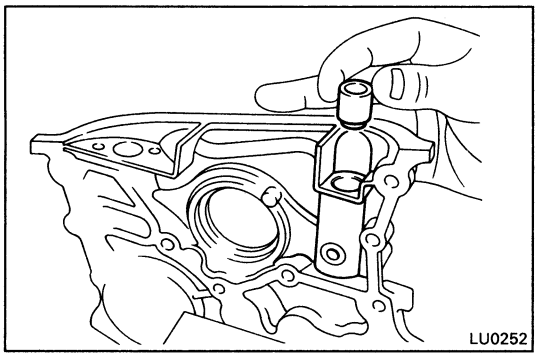
LU0252

INSPECTION OF OIL PUMP

1. INSPECT RELIEF VALVE

Coat the valve with engine oil and check that it falls smoothly into the valve hole by its own weight.

If it doesnt, replace the relief valve. If necessary, replace the oil pump assembly.

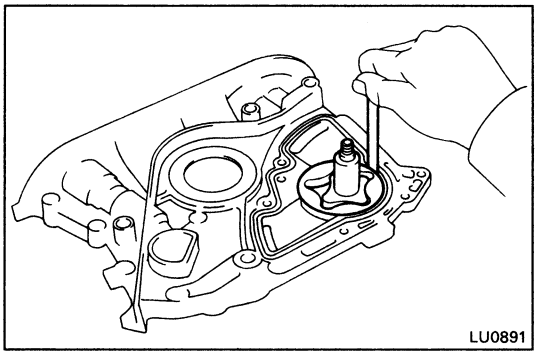
LU0891

2. INSPECT DRIVE AND DRIVEN ROTORS

A. **Inspect rotor body clearance**

Using a feeler gauge, measure the clearance between the driven rotor and body.

Standard body clearance: **0.100 – 0.160 mm (0.0039 – 0.0063 in.)**

Maximum body clearance: **0.20 mm (0.0079 in.)**

If the body clearance is greater than maximum, replace the rotors as a set. If necessary, replace the oil pump assembly.

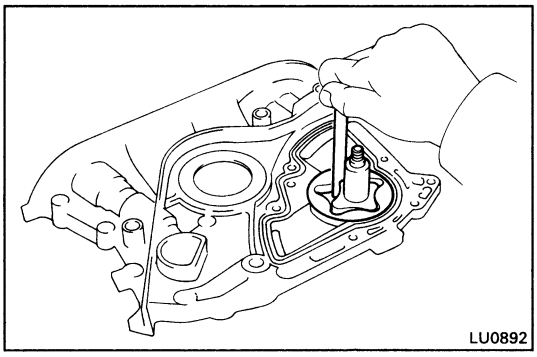
LU0892

B. **Inspect rotor tip clearance**

Using a feeler gauge, measure the clearance between the drive and driven rotors.

Standard tip clearance: **0.040 – 0.160 mm (0.0016 – 0.0063 in.)**

Maximum tip clearance: **0.20 mm (0.0079 in.)**

If the tip clearance is greater than maximum, replace the rotors as a set.

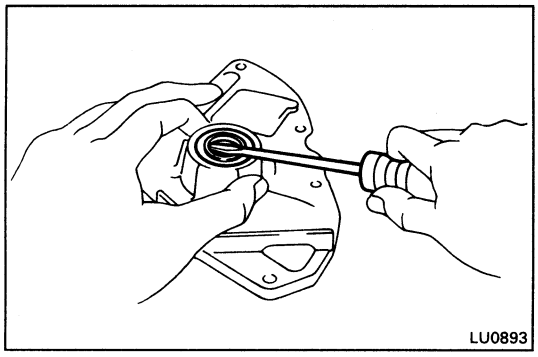

REPLACEMENT OF OIL PUMP OIL SEAL

1. **REMOVE OIL SEAL**

Using a screwdriver, pry out the oil seal.

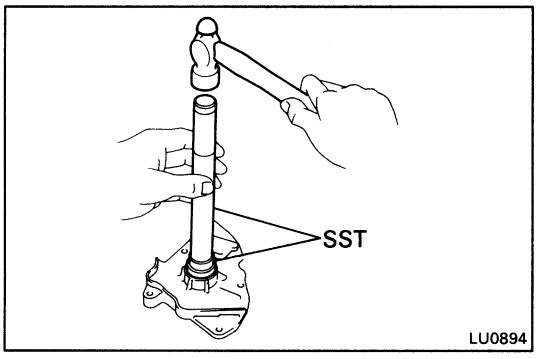

2. **INSTALL OIL SEAL**

(a) Using SST and a hammer, tap in a new oil seal until its surface is flush with the oil pump cover edge.

SST 09620-30010 (09627-30010, 09631-00020)

(b) Apply MP grease to the oil seal lip.

REPLACEMENT OF CRANKSHAFT FRONT OIL SEAL

(See page EM-160)

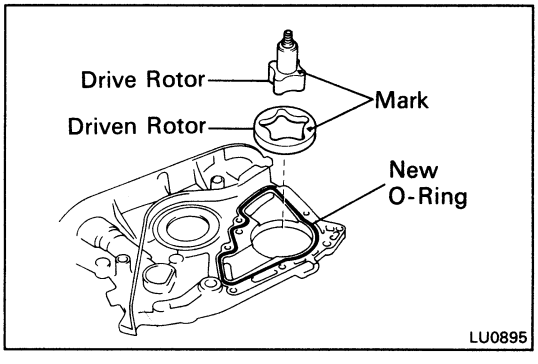

ASSEMBLY OF OIL PUMP

(See page LU-12)

1. **INSTALL DRIVE AND DRIVEN ROTORS**

(a) Place the drive and driven rotors into pump body with the marks facing the pump body cover side.

(b) Install a new O-ring to the pump body.

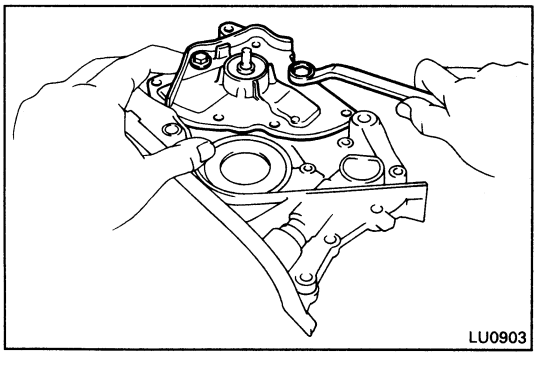

(c) Install the pump body cover with the two bolts.

Torque: 90 kg-cm (78 in.-lb, 8.8 N·m)

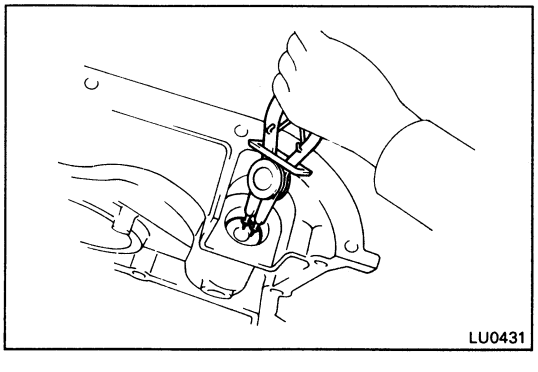

2. **INSTALL RELIEF VALVE**

(a) Insert the relief valve, spring and retainer into the pump body hole.

(b) Using snap ring pliers, install the snap ring.

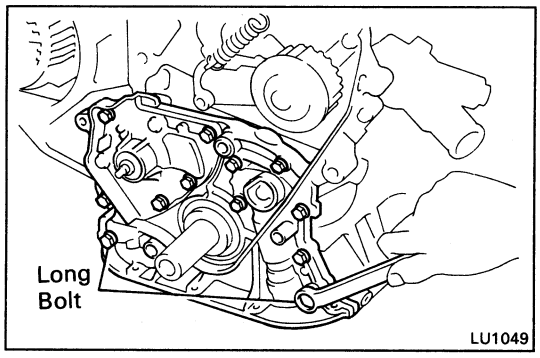

INSTALLATION OF OIL PUMP

(See page LU-9)

1. INSTALL OIL PUMP

Install a new gasket and the oil pump with the twelve bolts.

Torque:

3S-GTE	**80 kg-cm (69 in.-lb, 7.8 N·m)**
5S-FE	**95 kg-cm (82 in.-lb, 9.3 N·m)**

HINT: Each bolt length is indicated in the figure.

Bolt length:	Long bolt	35 mm (1.38 in.)
	Others	25 mm (0.98 in.)

2. INSTALL OIL PUMP PULLEY, CRANKSHAFT TIMING PULLEY AND NO.2 IDLER PULLEY

3S-GTE (See steps 1 to 3 on page EM-35)
5S-FE (See steps 1 to 3 on page EM-55)

3. INSTALL TIMING BELT

3S-GTE (See steps 5 to 8 and 10 to 25 on pages EM-35 to 41)
5S-FE (See steps 5 to 8 and 10 to 20 on pages EM-55 to 60)

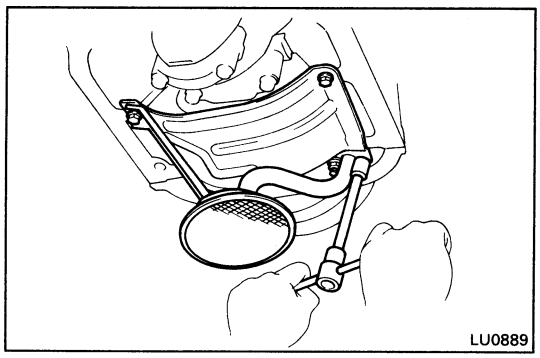

4. REMOVE ENGINE CHAIN HOIST FROM ENGINE

5. INSTALL BAFFLE PLATE AND OIL STRAINER

Install a new gasket, the baffle plate and the oil strainer with the two bolts and two nuts.

Torque: 55 kg-cm (48 in.-lb, 5.4 N·m)

6. INSTALL OIL PAN

(a) Remove any old packing (FIPG) material and be careful not to drop any oil on the contact surfaces of the oil pan and cylinder block.

- Using a razor blade and gasket scraper, remove all the old packing (FIPG) material from the gasket surfaces and sealing groove.
- Thoroughly clean all components to remove all the loose material.
- Using a non-residue solvent, clean both sealing surfaces.

NOTICE: Do not use a solvent which will affect the painted surfaces.

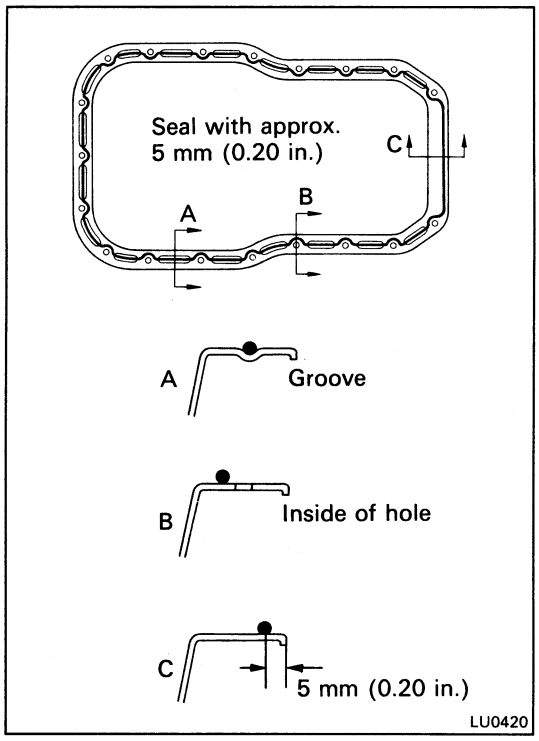

(b) Apply seal packing to the oil pan as shown in the figure.

Seal packing: Part No.08826-00080 or equivalent

- Install a nozzle that has been cut to a 3 – 5 mm (0.12 – 0.20 in.) opening.

HINT: Avoid applying an excessive amount to the surface. Be particularly careful near oil passages.

- Parts must be assembled within 5 minutes of application. Otherwise the material must be removed and reapplied.
- Immediately remove nozzle from the tube and reinstall cap.

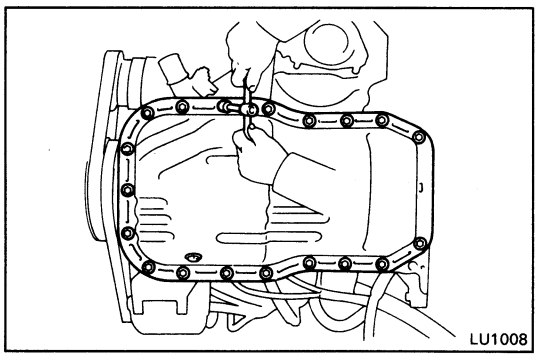

(c) Install the oil pan with the seventeen bolts and four nuts.

Torque: 55 kg-cm (48 in.-lb, 5.4 N·m)

(d) Install the dipstick.

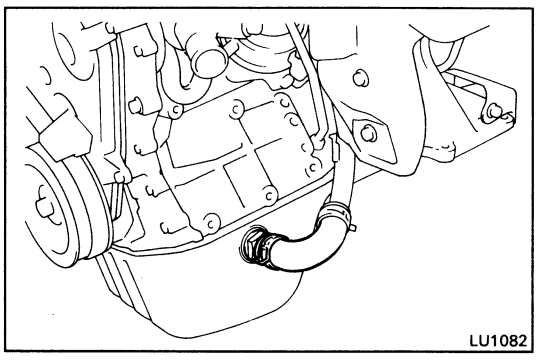

7. CONNECT TURBOCHARGER OIL OUTLET HOSE TO OIL PAN

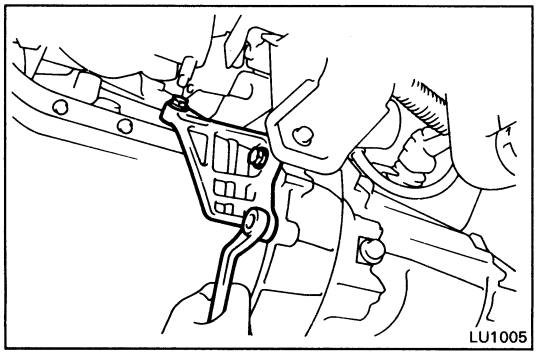

8. INSTALL STIFFENER PLATE

Install the stiffener plate with the two bolts.

Torque: 380 kg-cm (27 ft-lb, 37 N·m)

9. (3S-GTE)
INSTALL INTERCOOLER
(See steps 2 to 8, 10 and 11 on pages TC-23 to 25)

10. (3S-GTE)
INSTALL CATALYTIC CONVERTER
(See step 28 on pages EM-94 and 95)

11. (3S-GTE)
INSTALL A/C COMPRESSOR
(See step 3 on page TC-23)

12. (5S-FE)
INSTALL A/C BELT IDLER PULLEY
(See step 13 on page EM-221)

13. INSTALL FRONT EXHAUST PIPE
3S-GTE (See steps 18 and 19 on pages EM-174 and 175)
5S-FE (See step 15 on pages EM-221 and 222)

14. INSTALL CRUISE CONTROL ACTUATOR (w/ CRUISE CONTROL SYSTEM) AND ACCELERATOR LINKAGE
3S-GTE (See step 36 on page EM-178)
5S-FE (See step 33 on page EM-226)

15. INSTALL SUSPENSION UPPER BRACE
3S-GTE (See step 41 on page EM-179)
5S-FE (See step 36 on page EM-226)

16. CONNECT CABLE TO NEGATIVE TERMINAL OF BATTERY

17. FILL WITH ENGINE OIL (See page LU-8)

18. START ENGINE AND CHECK FOR LEAKS

19. RECHECK ENGINE OIL LEVEL (See page LU-6)

20. INSTALL RH ENGINE HOOD SIDE PANEL

OIL COOLER (3S-GTE)

COMPONENTS

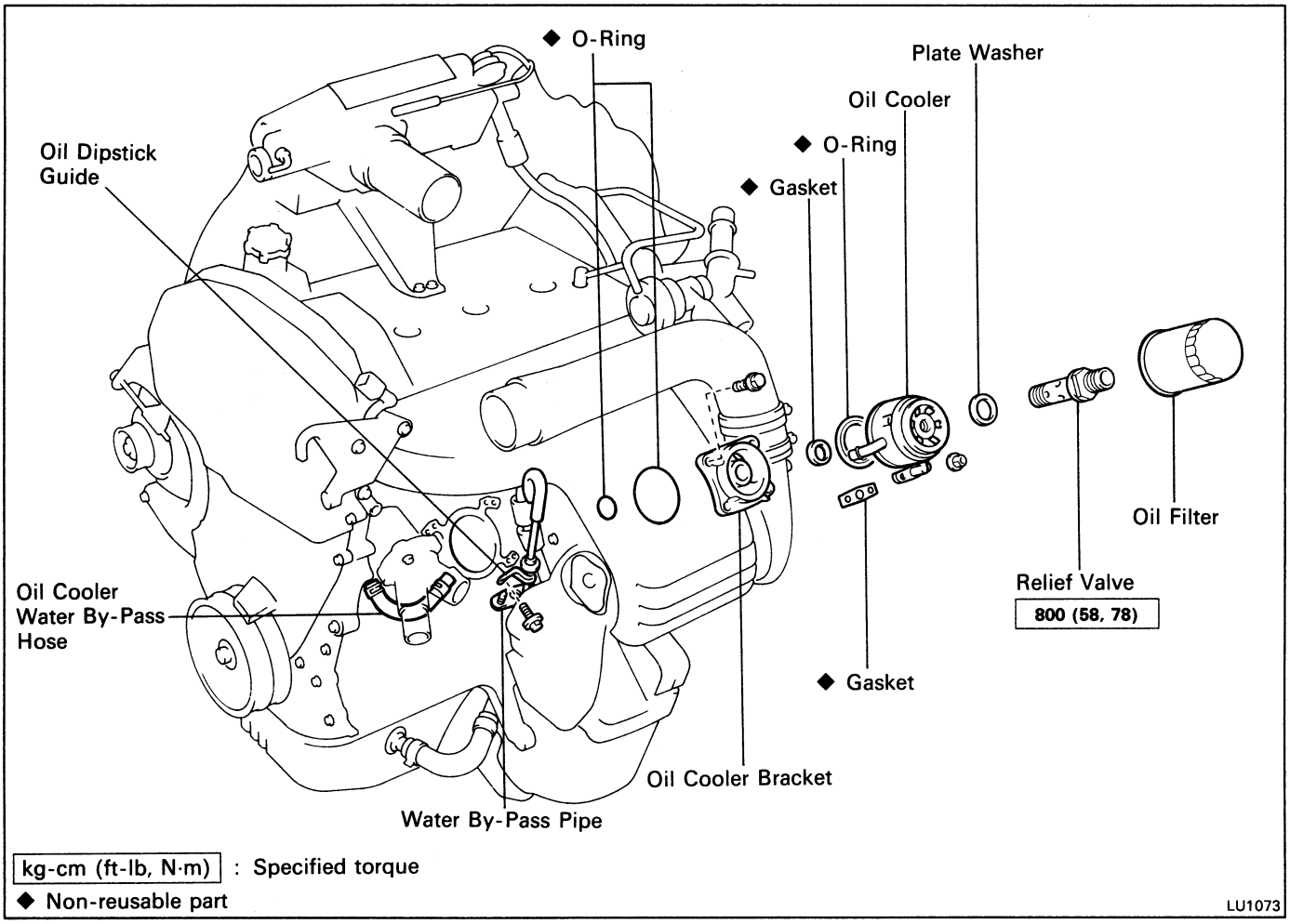

REMOVAL OF OIL COOLER

1. **DISCONNECT CABLE FROM NEGATIVE TERMINAL OF BATTERY**

   CAUTION: Work must be started after approx. 20 seconds or longer from the time the ignition switch is turned to the "LOCK" position and the negative (–) terminal cable is dosconnected from the battery.

2. **DRAIN ENGINE COOLANT (See page CO-6)**

3. **REMOVE ENGINE UNDER COVERS**

4. **REMOVE RH ENGINE HOOD SIDE PANEL**

5. **REMOVE NO.1 AIR INTAKE CONNECTOR (See step 4 on page TC-20)**

6. **REMOVE A/C COMPRESSOR WITHOUT DISCONNECTING HOSES (See steps 10 to 12 on pages TC-21 and 22)**

7. **REMOVE OIL FILTER (See page LU-7)**

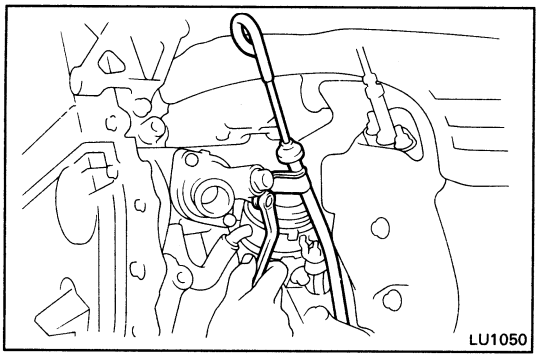

8. DISCONNECT OIL DIPSTICK GUIDE FROM WATER INLET

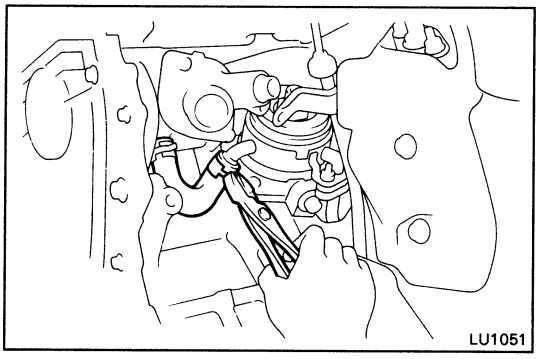

9. DISCONNECT WATER BY-PASS HOSE FROM OIL COOLER

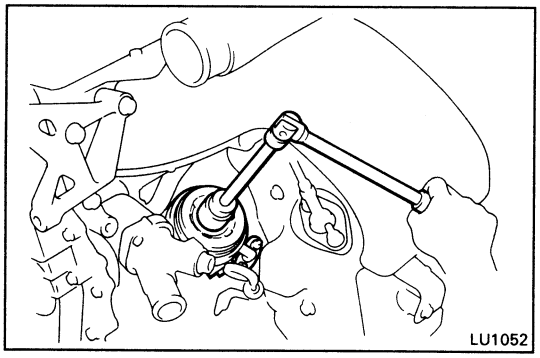

10. REMOVE OIL COOLER

(a) Remove the relief valve and plate washer.

(b) Remove the two nuts, oil cooler and gasket.

(c) Remove the O-ring and gasket from the oil cooler.

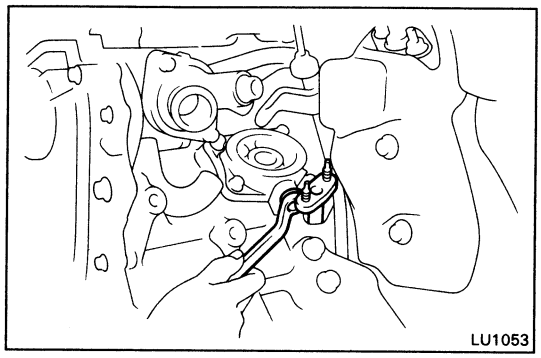

(d) Remove the bolt, and disconnect the water by-pass pipe from the oil cooler bracket.

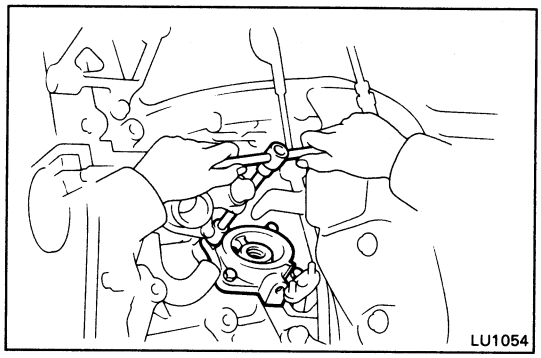

11. REMOVE OIL COOLER BRACKET

(a) Remove the four bolts and oil cooler bracket.

(b) Remove the two O-rings from the oil cooler.

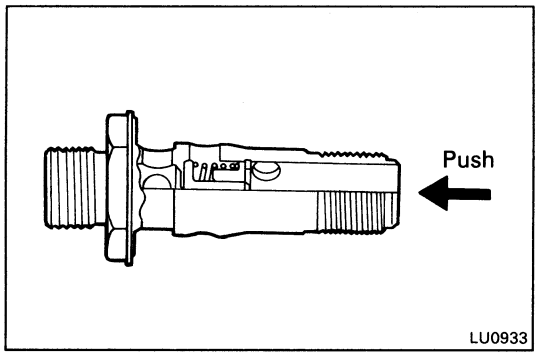

INSPECTION OF OIL COOLER

1. INSPECT RELIEF VALVE

Push the valve with a wooden stick to check if it is stuck.

If stuck, replace the relief valve.

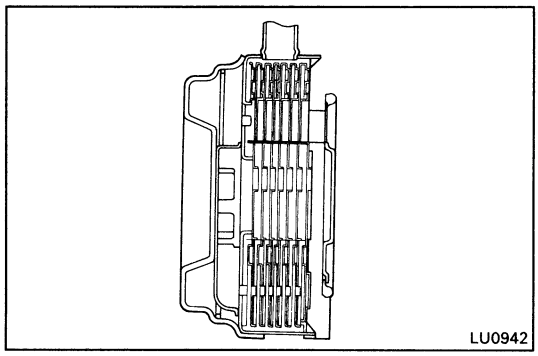

2. INSPECT OIL COOLER

Check the oil cooler for damage or clogging.

If necessary, replace the oil cooler.

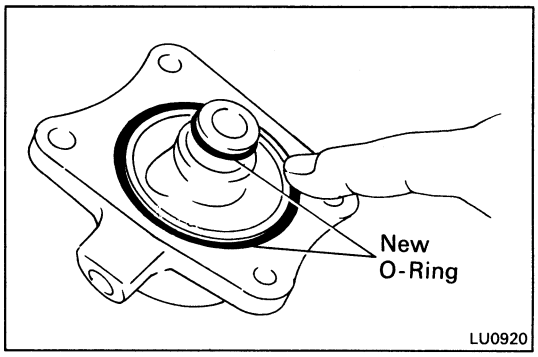

INSTALLATION OF OIL COOLER

(See page LU-18)

1. INSTALL OIL COOLER BRACKET

(a) Install two new O-rings to the oil cooler bracket.

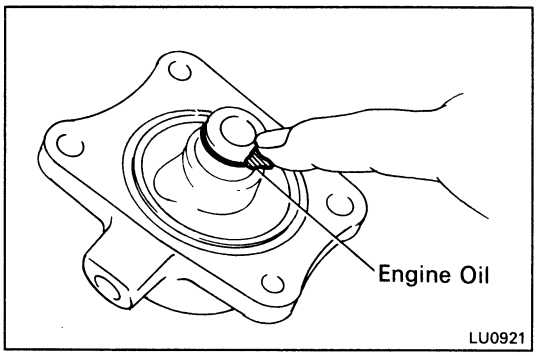

(b) Apply a light coat of engine oil on the small O-ring.

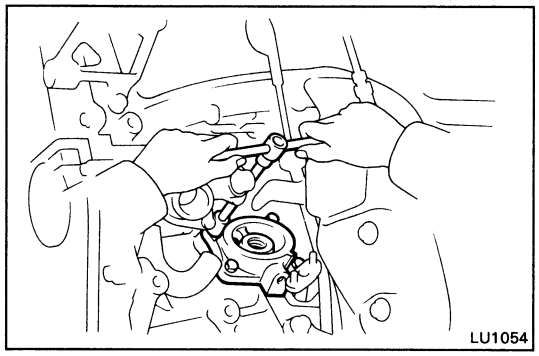

(c) Install the oil cooler bracket with the four bolts.

Torque: 80 kg-cm (69 in.-lb, 7.8 N·m)

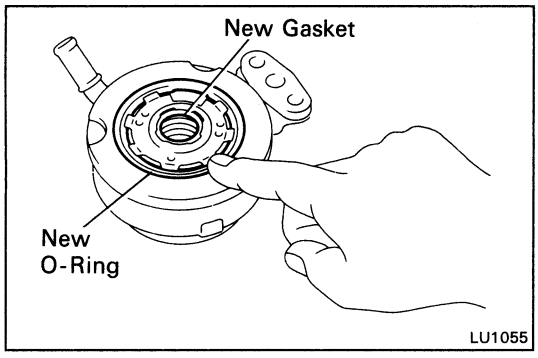

2. INSTALL OIL COOLER

(a) Install new O-ring and gasket to the oil cooler.

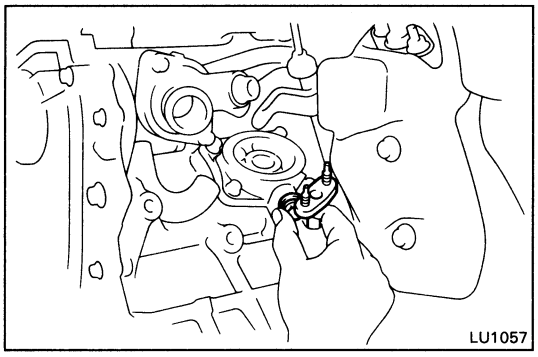

(b) Temporarily install the water by-pass pipe with the bolt.

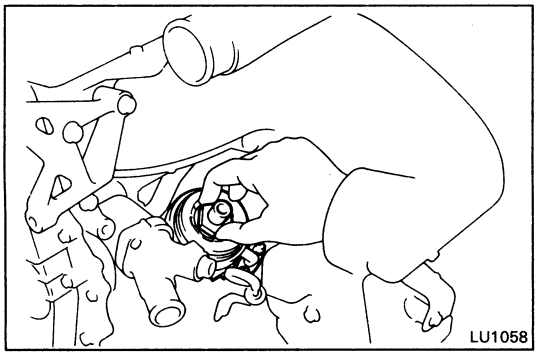

(c) Apply a light coat of engine oil on the threads and under the head of the relief valve.

(d) Place a new gasket on the water by-pass pipe.

(e) Temporarily install the oil cooler with the plate washer, relief valve and two nuts.

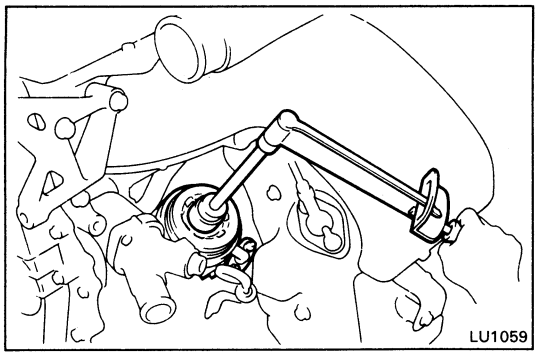

(f) Tighten the relief valve.

Torque: 800 kg-cm (58 ft-lb, 78 N·m)

(g) Tighten the two nuts holding the oil cooler to the water by-pass pipe.

Torque: 120 kg-cm (9 ft-lb, 12 N·m)

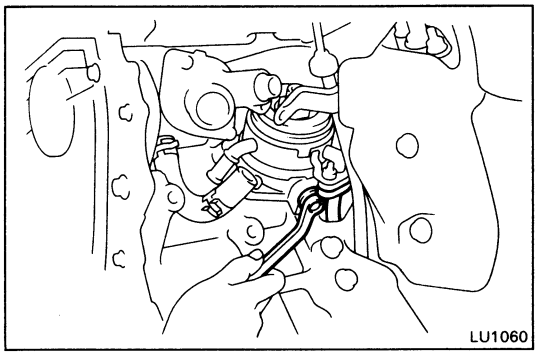

(h) Tighten the bolt holding the water by-pass pipe to oil cooler bracket.

Torque: 180 kg-cm (13 ft-lb, 18 N·m)

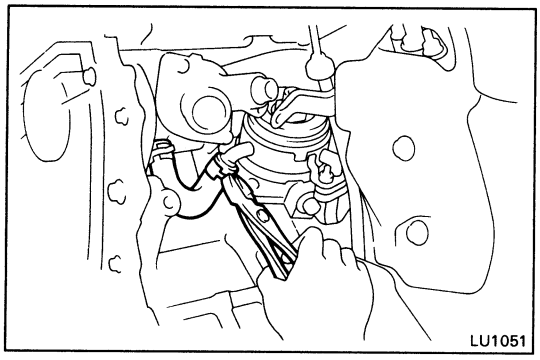

3. CONNECT WATER BY-PASS HOSE TO OIL COOLER

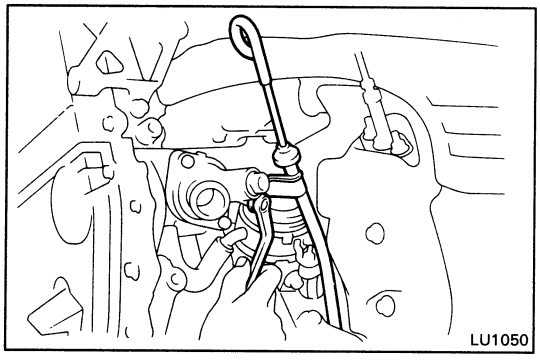

4. INSTALL OIL DIPSTICK GUIDE TO WATER INLET

5. INSTALL OIL FILTER (See page LU-7)

6. INSTALL A/C COMPRESSOR
(See steps 3 to 5 on pages TC-23 and 24)

7. INSTALL NO.1 AIR INTAKE CONNECTOR
(See step 10 on page TC-25)

8. INSTALL RH ENGINE HOOD SIDE PANEL

9. CONNECT CABLE TO NEGATIVE TERMINAL OF BATTERY

10. FILL WITH ENGINE COOLANT (See page CO-7)

11. START ENGINE AND CHECK FOR LEAKS

12. CHECK ENGINE OIL LELEL (See page LU-6)

13. INSTALL ENGINE UNDER COVERS

OIL COOLER (5S-FE)

COMPONENTS

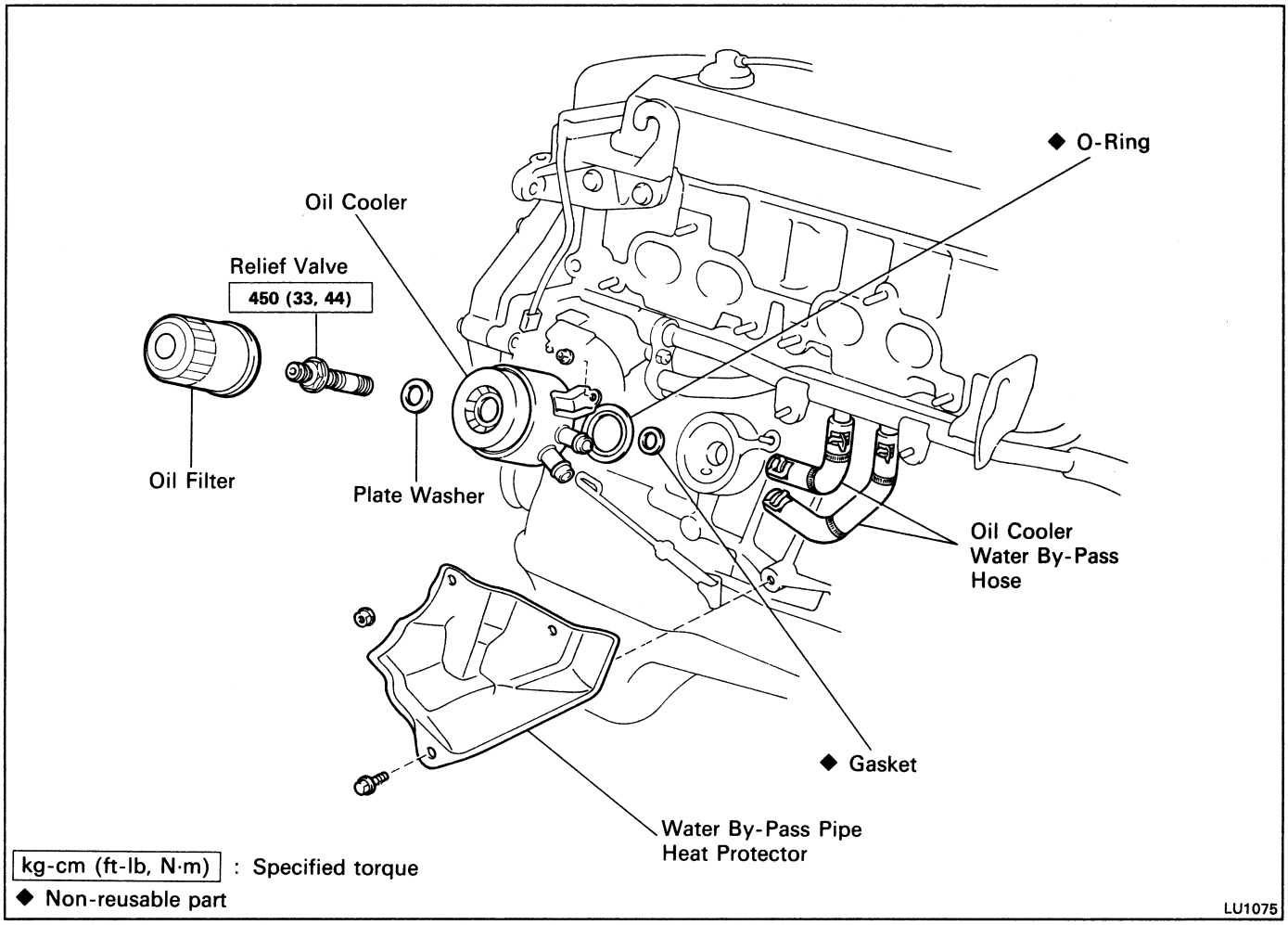

REMOVAL OF OIL COOLER

1. **DISCONNECT CABLE FROM NEGATIVE TERMINAL OF BATTERY**

   CAUTION: Work must be started after approx. 20 seconds or longer from the time the ignition switch is turned to the "LOCK" position and the negative (–) terminal cable is dosconnected from the battery.

2. **DRAIN ENGINE COOLANT (See page CO-6)**

3. **REMOVE ENGINE UNDER COVERS**

4. **REMOVE FRONT EXHAUST PIPE (See step 29 on page EM-187)**

5. **REMOVE EXHAUST MANIFOLD AND CATALYTIC CONVERTER ASSEMBLY (See step 14 on page EM-99)**

6. **REMOVE OIL FILTER (See page LU-7)**

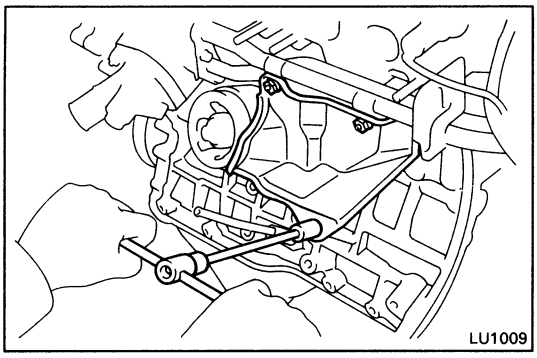

7. REMOVE WATER BY-PASS HOSE HEAT PROTECTOR

Remove the bolt, two nuts and heat protector.

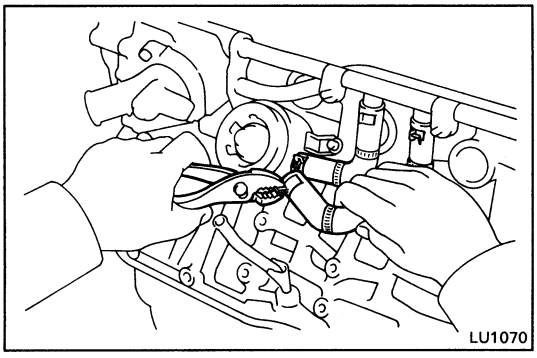

8. DISCONNECT WATER BY-PASS HOSES FROM OIL COOLER

Disconnect the two water by-pass hoses.

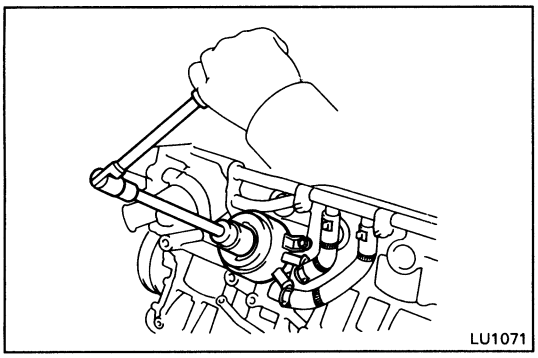

9. REMOVE OIL COOLER

(a) Remove the relief valve and plate washer.

(b) Remove the nut and oil cooler.

(c) Remove the O-ring and gasket from the oil cooler.

INSPECTION OF OIL COOLER

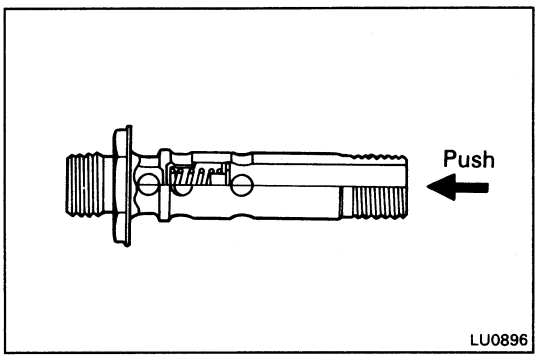

1. INSPECT RELIEF VALVE

Push the valve with a wooden stick to check if it is stuck.

If stuck, replace the relief valve.

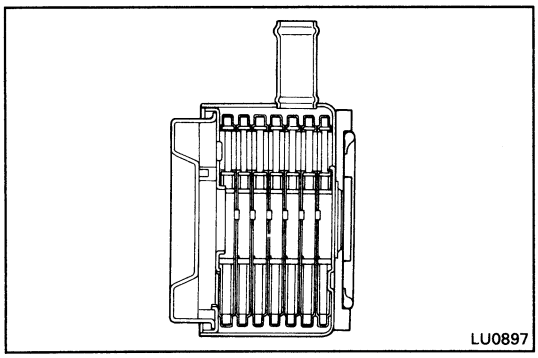

2. INSPECT OIL COOLER

Check the oil cooler for damage or clogging.

If necessary, replace the oil cooler.

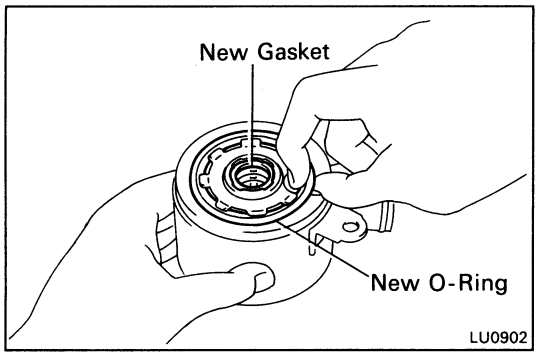

INSTALLATION OF OIL COOLER

(See page LU-23)

1. **INSTALL OIL COOLER**
   (a) Install new O-ring and gasket to the oil cooler.

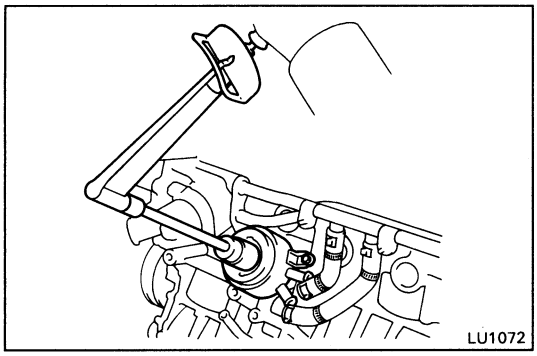

   (b) Apply a light coat of engine oil on the threads and under the head of the relief valve.
   (c) Temporarily install the nut.
   (d) Install the oil cooler with the plate washer and relief valve.

   Torque: 450 kg-cm (33 ft-lb, 44 N·m)

   (e) Tighten the nut.

   Torque: 80 kg-cm (69 in.-lb, 7.8 N·m)

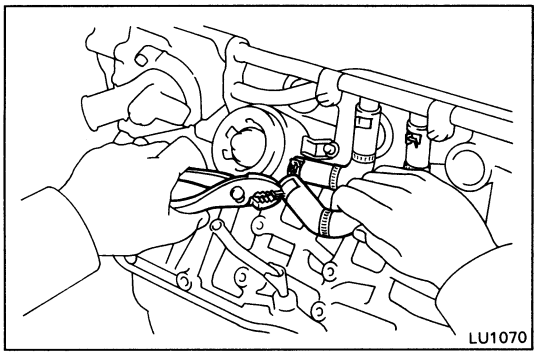

2. **CONNECT WATER BY-PASS HOSES**
   Connect the two water by-pass hoses.

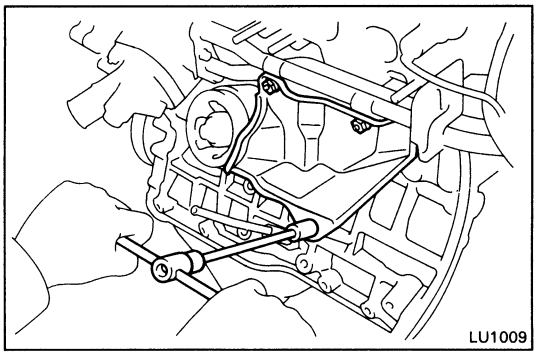

3. **INSTALL WATER BY-PASS HOSE HEAT PROTECTOR**
   Install the heat protector with the bolt and two nuts.
4. **INSTALL OIL FILTER (See page LU-7)**
5. **INSTALL EXHAUST MANIFOLD AND CATALYTIC CONVERTER ASSEMBLY (See step 25 on pages EM-130 and 131)**
6. **INSTALL FRONT EXHAUST PIPE (See step 15 on pages EM-221 and 222)**
7. **CONNECT CABLE TO NEGATIVE TERMINAL OF BATTERY**
8. **FILL WITH ENGINE COOLANT (See page CO-7)**
9. **START ENGINE AND CHECK FOR LEAKS**
10. **CHECK ENGINE OIL LELEL (See page LU-6)**
11. **INSTALL ENGINE UNDER COVERS**

OIL NOZZLES (3S-GTE)

COMPONENTS

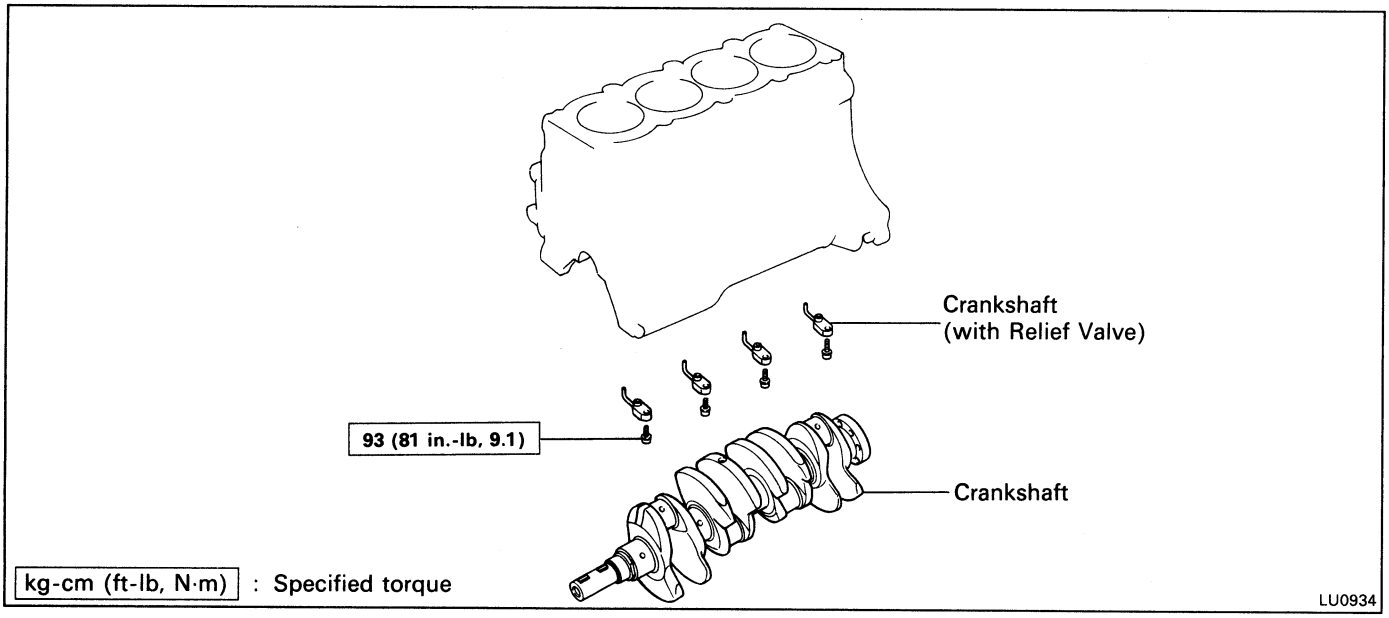

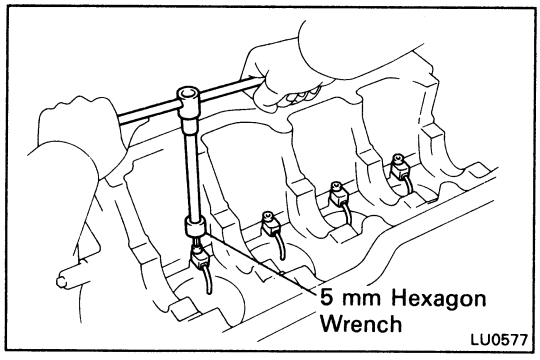

REMOVAL OF OIL NOZZLES

1. **REMOVE CRANKSHAFT (See pages EM-134 to 150)**

2. **REMOVE OIL NOZZLES (WITH RELIEF VALVES)**

   Using a 5 mm hexagon wrench, remove the bolt and oil nozzle. Remove the four oil nozzles.

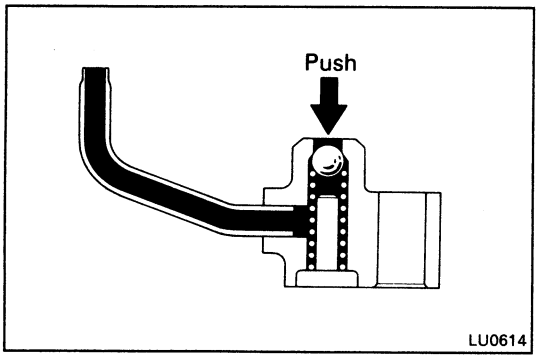

INSPECTION OF OIL NOZZLES

INSPECT RELIEF VALVES (OIL NOZZLES)

Push the valve with a wooden stick to check if it is stuck.

If stuck, replace the relief valve.

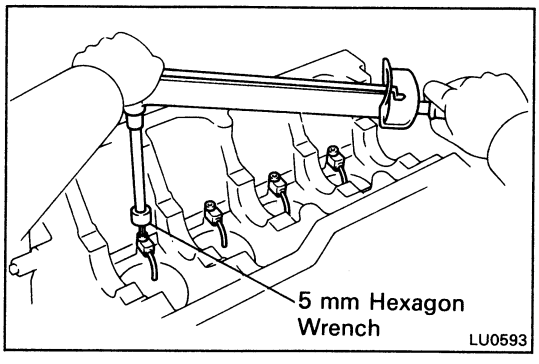

INSTALLATION OF OIL NOZZLES

1. **INSTALL OIL NOZZLES (WITH RELIEF VALVES)**

   Using a 5 mm hexagon wrench, install the oil nozzle with the bolt. Install the four oil nozzles.

   Torque: 93 kg-cm (81 in.-lb, 9.1 N·m)

2. **INSTALL CRANKSHAFT (See pages EM-164 to 180)**

IGNITION SYSTEM

	Page
PRECAUTIONS	IG-2
TROUBLESHOOTING	IG-3
IGNITION SYSTEM CIRCUIT	IG-4
ON-VEHICLE INSPECTION (3S-GTE)	IG-5
ON-VEHICLE INSPECTION (5S-FE)	IG-10
DISTRIBUTOR (3S-GTE)	IG-14
DISTRIBUTOR (5S-FE)	IG-19

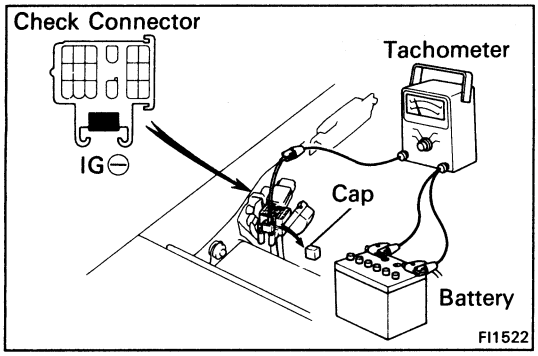

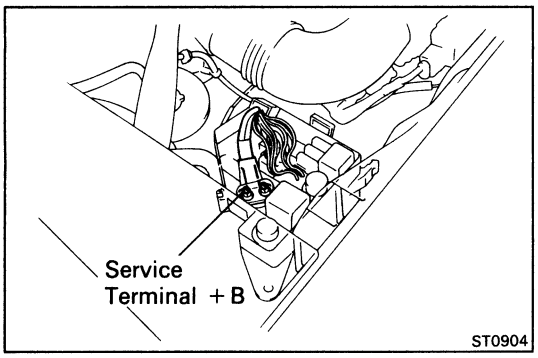

PRECAUTIONS

1. **Do not leave the ignition switch on for more than 10 minutes if the engine will not start.**
2. **With a tachometer connected to the system, connect the test probe of the tachometer to terminal IG⊖ of the check connector.**
3. **With a tachometer connected to the system, connect the power source probe of the tachometer to service terminal +B of the engine compartment relay box.**
4. **As some tachometers are not compatible with this ignition system, we recommend that you confirm the compatibility of yours before use.**
5. **NEVER allow the tachometer terminal to touch ground as this could damage the igniter and/or ignition coil.**
6. **Do not disconnect the battery when the engine is running.**
7. **Check that the igniter is properly grounded to the body.**

TROUBLESHOOTING

Problem	Possible cause	Remedy	Page
Engine will not start hard to start (cranks ok)	Incorrect ignition timing	Reset timing	IG-17, 22
	Ignition problems		
	● Ignition coil	Inspect coil	IG-8, 12
	● Igniter	Inspect igniter	IG-9, 13
	● Distributor	Inspect distributor	IG-9, 13
	● High-tension cords	Inspect high-tension cords	IG-6, 11
	Ignition wiring disconnected or broken	Inspect wiring	
Rough idle or stalls	Spark plug faulty	Inspect plugs	IG-6, 11
	Ignition wiring faulty	Inspect wiring	
	Incorrect ignition timing	Reset timing	IG-17, 22
	Ignition problems		
	● Ignition coil	Inspect coil	IG-8, 12
	● Igniter	Inspect igniter	IG-9, 13
	● Distributor	Inspect distributor	IG-9, 13
	● High-tension cords	Inspect high-tension cords	IG-6, 11
Engine hesitates/ poor accleration	Spark plug faulty	Inspect plugs	IG-6, 11
	Ignition wiring faulty	Inspect wiring	
	Incorrect ignition timing	Reset timing	IG-17, 22
Engine dieseling (runs sfter ignition) (switch is turned off)	Incorrect ignition timing	Reset timing	IG-17, 22
Muffler explosion (after fire) all the time	Incorrect ignition timing	Reset timing	IG-17, 22
Engine backfires	Incorrect ignition timing	Reset timing	IG-17, 22
Poor gasoline mileage	Spark plug faulty	Inspect plugs	IG-6, 11
	Incorrect ignition timing	Reset timing	IG-17, 22
Engine overheats	Incorrect ignition timing	Reset timing	IG-17, 22

IGNITION SYSTEM CIRCUIT

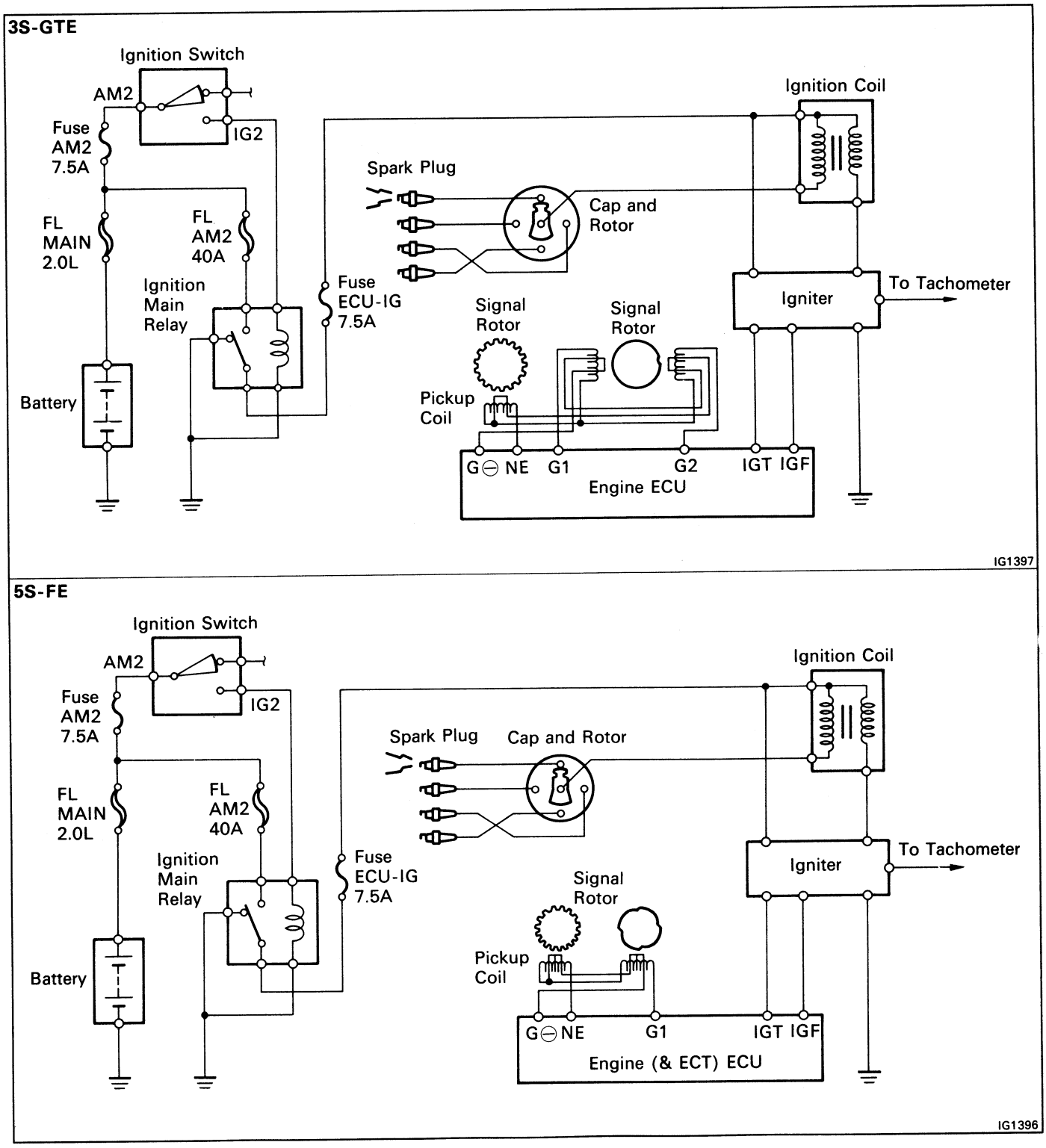

ELECTRONIC SPARK ADVANCE (ESA)

The ECU is programmed with data for optimum ignition timing under any and all operating conditions. Using data provided by sensors which monitor various engine functions (rpm, intake air volume, eng. temperature, etc.) the microcomputer (ECU) triggers the spark at precisely the right instant.

ON-VEHICLE INSPECTION (3S-GTE)

SPARK TEST

CHECK THAT SPARK OCCURS

(a) Disconnect the high-tension cord from the distributor.

(b) Hold the end about 12.5 mm (0.50 in.) from the body of car.

(c) Check if spark occurs while engine is being cranked.

HINT: To prevent gasoline from being injected from injectors during this test, crank the engine for no more than 1 – 2 seconds at a time.

If the spark does not occurs, perform the test as follows:

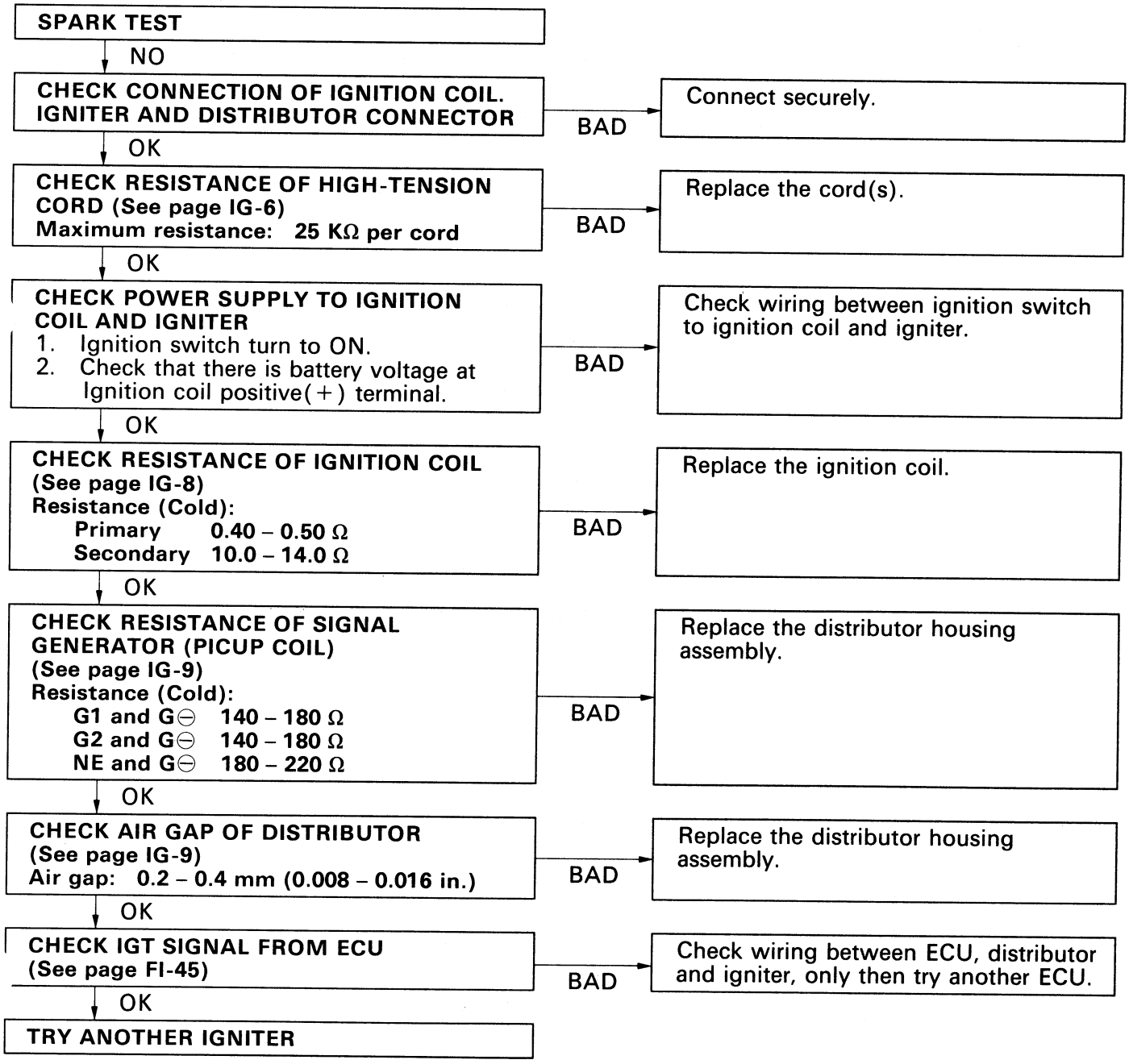

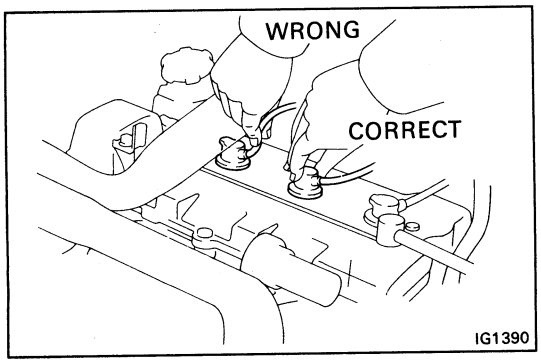

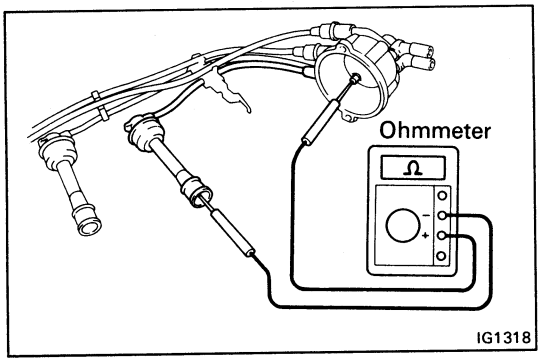

INSPECTION OF HIGH-TENSION CORDS

1. **DISCONNECT HIGH-TENSION CORDS FROM SPARK PLUGS**

   Disconnect the high-tension cords at rubber boot. DO NOT pull on the cords.

   NOTICE: Pulling on or bending the cords may damage the conductor inside.

2. **DISCONNECT HIGH-TENSION CORD FROM IGNITION COIL (See step 3 on pages IG-14 and 15)**

3. **REMOVE DISTRIBUTOR CAP WITHOUT DISCONNECTING HIGH-TENSION CORDS**

4. **INSPECT HIGH-TENSION CORD RESISTANCE**

   Using an ohmmeter, measure the resistance without disconnecting the distributor cap.

   Maximum resistance: 25 kΩ per cord

   If the resistance is greater than maximum, check the terminals. If necessary, replace the high-tension cord and/or distributor cap.

5. **REINSTALL DISTRIBUTOR CAP**

6. **RECONNECT HIGH-TENSION CORD TO IGNITION COIL (See step 5 on pages IG-16 and 17)**

7. **RECONNECT HIGH-TENSION CORDS TO SPARK PLUGS**

INSPECTION OF SPARK PLUGS

NOTICE:

- **Never use a wire brush for cleaning.**
- **Never attempt to adjust the electrode gap on used spark plug.**
- **Spark plug should be replaced every 100,000 km (60,000 miles).**

1. **DISCONNECT HIGH-TENSION CORDS FROM SPARK PLUGS**

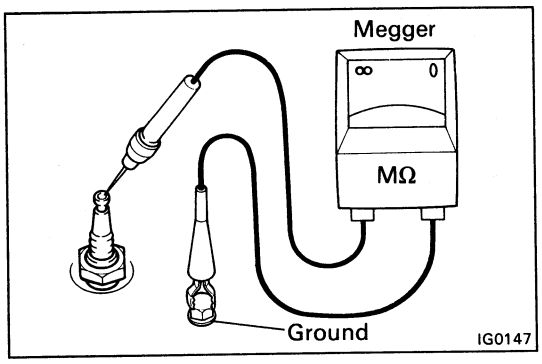

2. **INSPECT ELECTRODE**

   Using a megger (insulation resistance meter), measure the insulation resistance.

   Correct insulation resistance: 10 MΩ or more

   If the resistance is less than specified, proceed to step 4.

   HINT: If a megger is not avariable, the following simple method of inspection provides fairy accurate results.

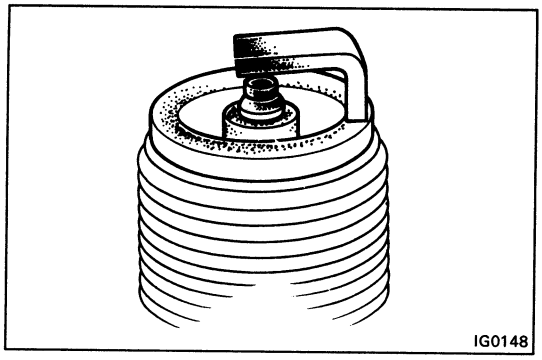

(Simple Method)

(a) Quickly race the engine to 4,000 rpm five times.

(b) Remove the spark plug. (See step 3)

(c) Visually check the spark plug.

If the electrode is dry . . . Okey

If the electrode is wet . . . Proceed to step 3

(d) Reinstall the spark plug.
(See step 7 on page IG-8)

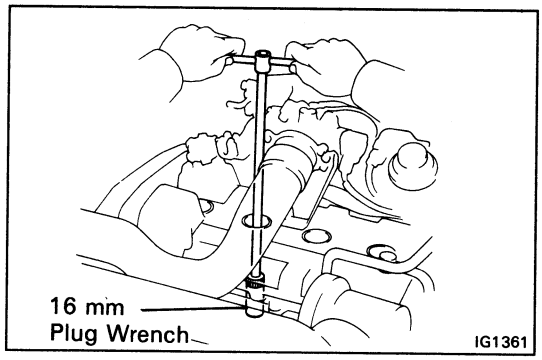

3. REMOVE SPARK PLUGS

Using a 16 mm plug wrench, remove the spark plug.

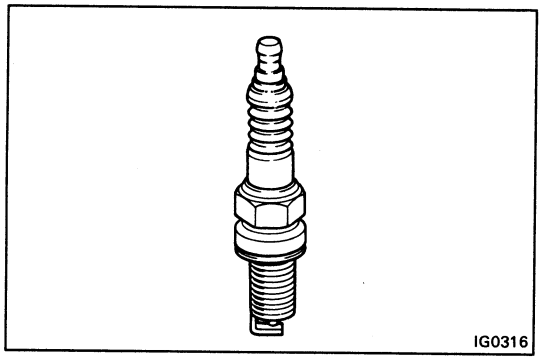

4. VISUALLY INSPECT SPARK PLUGS

Check the spark plug for thread damage and insulator damage.

If abnormal, replace the spark plug.

Recommended spark plug: **ND PK20R8**
NGK BKR6EP8

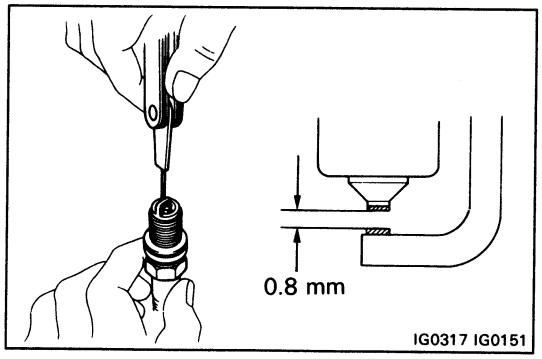

5. INSPECT ELECTRODE CAP

Maximum electrode gap: 1.0 mm (0.39 in.)

If the gap is greater than maximum, replace the spark plug.

Correct electrode gap of new spark plug:
0.8 mm (0.31 in.)

NOTICE: If adjusting the gap of a new spark plug, bent only the base of the ground electrode. Do not touch the tip. Never attempt to adjust the gap on the used plug.

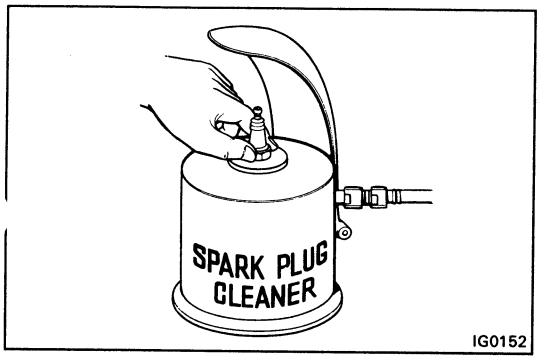

6. CLEAN SPARK PLUGS

If the electrode has traces of wet carbon, allow it to dry and then clean with a spark plug cleaner.

Air pressure: Below 6 kg/cm² (85 psi, 588 kPa)

Duration: 20 seconds or less

HINT: If there are traces of oil, remove it with gasoline before using the spark plug cleaner.

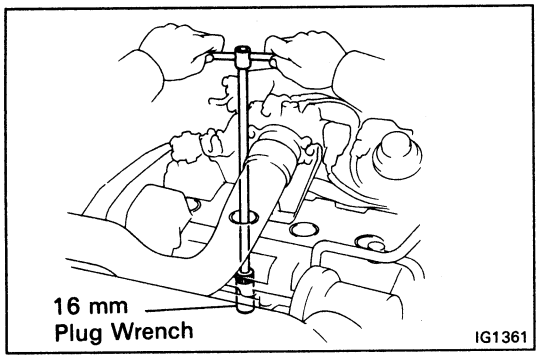

7. **INSTALL SPARK PLUGS**

   Using a 16 mm plug wrench, install the spark plug.

   Torque: 180 kg-cm (13 ft-lb, 18 N·m)

8. **RECONNECT HIGH-TENSION CORDS TO SPARK PLUGS**

INSPECTION OF IGNITION COIL

1. **DISCONNECT IGNITION COIL CONNECTOR**

2. **DISCONNECT HIGH-TENSION CORD FROM IGNITION COIL (See step 3 on pages IG-14 and 15)**

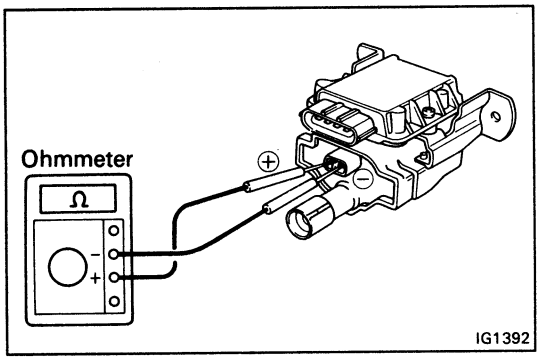

3. **INSPECT PRIMARY COIL RESISTANCE**

   Using an ohmmeter, measure the resistance between positive (+) and negative (–) terminals.

   Primary coil resistance (Cold): 0.41 – 0.50 Ω

   If the resistance is not as specified, replace the ignition coil.

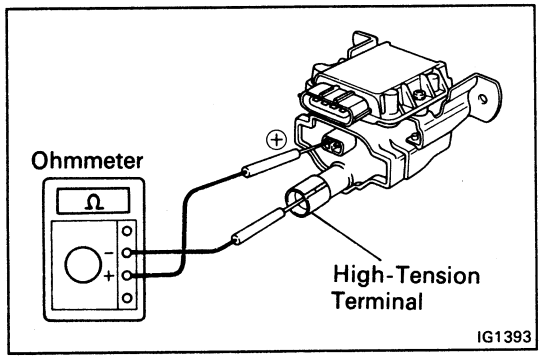

4. **INSPECT SECONDARY COIL RESISTANCE**

   Using an ohmmeter, measure the resistance between positive (+) and high-tension terminals

   Secondary coil resistance (Cold): 10.0 – 14.0 kΩ

   If the resistance is not as specified, replace the ignition coil.

5. **RECONNECT HIGH-TENSION CORD TO IGNITION COIL (See step 5 on pages IG-16 and 17)**

6. **RECONNECT IGNITION COIL CONNECTOR**

INSPECTION OF DISTRIBUTOR

1. DISCONNECT DISTRIBUTOR CONNECTOR
2. REMOVE DISTRIBUTOR CAP
3. REMOVE ROTOR

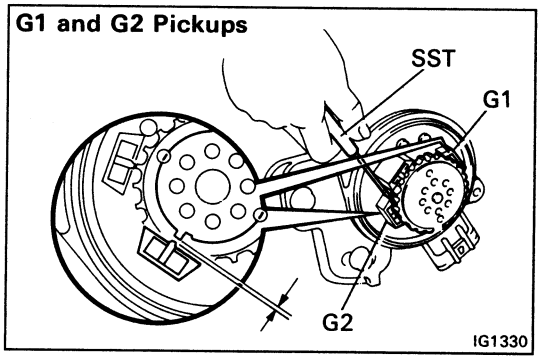

4. INSPECT AIR GAP

Using SST (G1 and G2 pickups) and a feeler gauge (NE pickup), measure the air gap between the signal rotor and pickup coil projection.

SST 09240-00020 for G1 and G2 pickups

Air gap: 0.2 – 0.4 mm (0.008 – 0.016 in.)

If the air gap is not as specified, replace the distributor housing assembly.

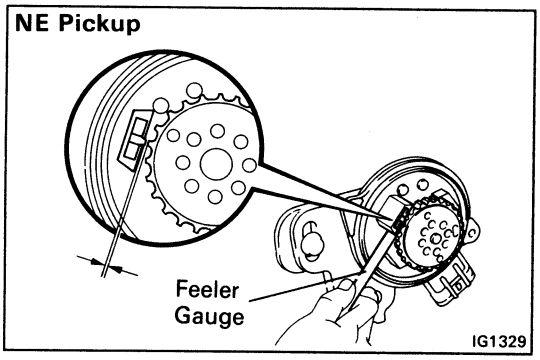

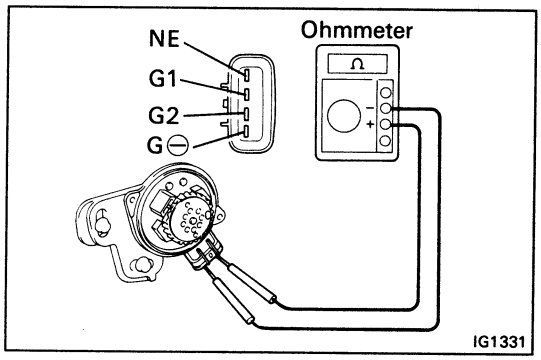

5. INSPECT SIGNAL GENERATOR (PICKUP COIL) RESISTANCE

Using an ohmmeter, measure the resistance between terminals.

Pickup coil resistance (Cold):

G1 and G⊖	**140 – 180 Ω**
G2 and G⊖	**140 – 180 Ω**
NE and G⊖	**180 – 220 Ω**

If the resistance is not as specified, replace the distributor housing assembly.

6. REINSTALL ROTOR
7. REINSTALL DISTRIBUTOR CAP
8. RECONNECT DISTRIBUTOR CONNECTOR

INSPECTION OF IGNITER

(See procedure Spark Test on page IG-5)

ON-VEHICLE INSPECTION (5S-FE)

SPARK TEST

CHECK THAT SPARK OCCURS

(a) Disconnect the high-tension cord from the distributor.

(b) Hold the end about 12.5 mm (0.50 in.) from the body of car.

(c) Check if spark occurs while engine is being cranked.

HINT: To prevent gasoline from being injected from injectors during this test, crank the engine for no more than 1 – 2 seconds at a time.

If the spark does not occurs, perform the test as follows:

SPARK TEST

↓ NO

CHECK CONNECTION OF IGNITION COIL. IGNITER AND DISTRIBUTOR CONNECTOR → BAD → Connect securely.

↓ OK

CHECK RESISTANCE OF HIGH-TENSION CORD (See page IG-11)
Maximum resistance: 25 KΩ per cord → BAD → Replace the cord(s).

↓ OK

CHECK POWER SUPPLY TO IGNITION COIL AND IGNITER
1. Ignition switch turn to ON.
2. Check that there is battery voltage at Ignition coil positive(+) terminal.

→ BAD → Check wiring between ignition switch to ignition coil.

↓ OK

CHECK RESISTANCE OF IGNITION COIL (See page IG-12)
Resistance (Cold):
Primary 0.40 – 0.50 Ω
Secondary 10.0 – 14.0 kΩ

→ BAD → Replace the ignition coil.

↓ OK

CHECK RESISTANCE OF SIGNAL GENERATOR (PICUP COIL) (See page IG-13)
Resistance (Cold): 170 – 210 Ω

→ BAD → Replace the distributor housing assembly.

↓ OK

CHECK AIR GAP OF DISTRIBUTOR (See page IG-13)
Air gap: 0.2 – 0.4 mm (0.008 – 0.016 in.)

→ BAD → Replace the distributor housing assembly.

↓ OK

CHECK IGT SIGNAL FROM ECU (See page FI-62 or 79)

→ BAD → Check wiring between ECU, distributor and igniter, only then try another ECU.

↓ OK

TRY ANOTHER IGNITER

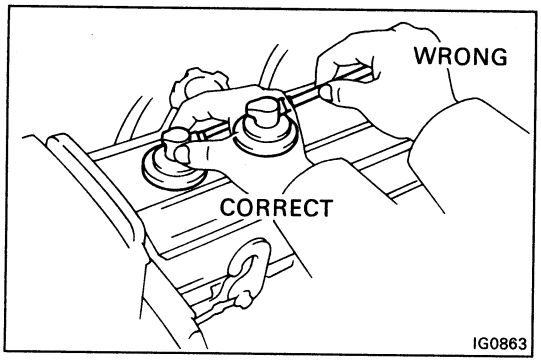

INSPECTION OF HIGH-TENSION CORDS

1. **DISCONNECT HIGH-TENSION CORDS FROM SPARK PLUGS**

   Disconnect the high-tension cords at rubber boot. DO NOT pull on the cords.

   NOTICE: Pulling on or bending the cords may damage the conductor inside.

2. **DISCONNECT HIGH-TENSION CORD FROM IGNITION COIL (See procedure step 3 on pages IG-14 and 15)**

3. **REMOVE DISTRIBUTOR CAP WITHOUT DISCONNECTING HIGH- TENSION CORDS**

4. **INSPECT HIGH-TENSION CORD RESISTANCE**

   Using an ohmmeter, measure the resistance without disconnecting the distributor cap.

   Maximum resistance: 25 kΩ per cord

   If the resistance is greater than maximum, check the terminals. If necessary, replace the high- tension cord and/or distributor cap.

5. **REINSTALL DISTRIBUTOR CAP**

6. **RECONNECT HIGH-TENSION CORD TO IGNITION COIL (See procedure step 5 on pages IG-16 and 17)**

7. **RECONNECT HIGH-TENSION CORDS TO SPARK PLUGS**

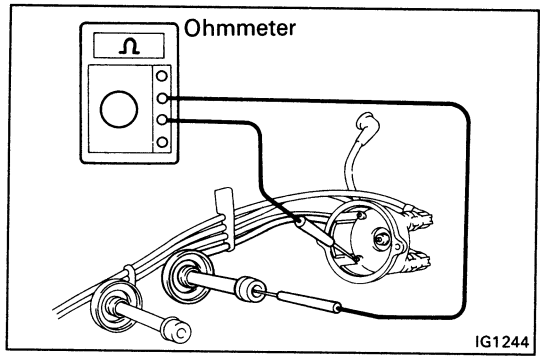

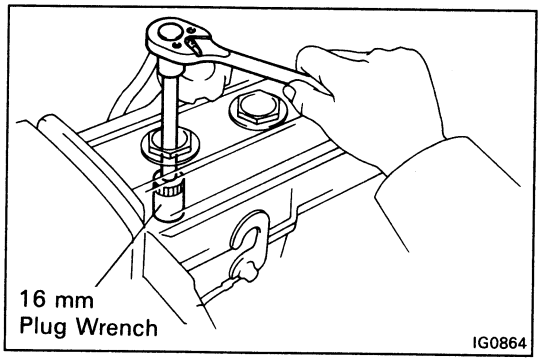

INSPECTION OF SPARK PLUGS

1. **DISCONNECT HIGH-TENSION CORDS FROM SPARK PLUGS**

2. **REMOVE SPARK PLUGS**

   Using a 16 mm plug wrench, remove the spark plug.

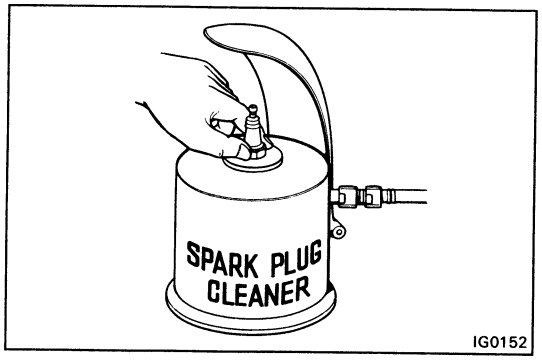

3. **CLEAN SPARK PLUGS**

   Using a spark plug cleaner or wire brush, clean the spark plug.

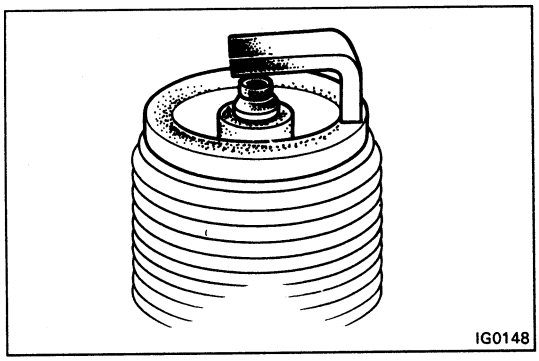
IG0148

4. VISUALLY INSPECT SPARK PLUGS

Check the spark plug for electrode wear, thread damage and insulator damage.

If abnormal, replace the spark plug.

Recommended spark plug: ND K16R-U11
NGK BKR5EYA11

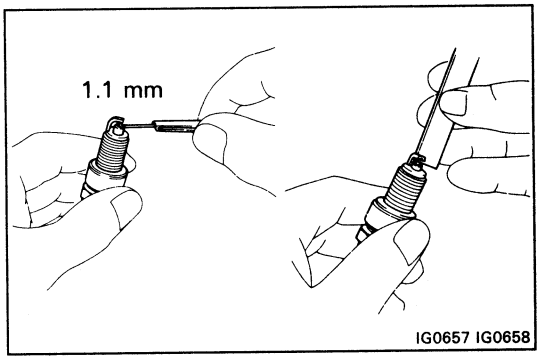

IG0657 IG0658

5. ADJUST ELECTRODE CAP

Carefully bent the outer electrode to obtain the correct electrode gap.

Correct electrode gap: 1.1 mm (0.43 in.)

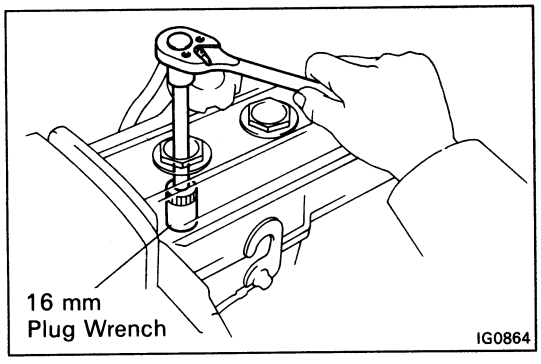

IG0864

6. INSTALL SPARK PLUGS

Using a 16 mm plug wrench, install the spark plug.

Torque: 180 kg-cm (13 ft-lb, 18 N·m)

7. RECONNECT HIGH-TENSION CORDS TO SPARK PLUGS

INSPECTION OF IGNITION COIL

1. DISCONNECT IGNITION COIL CONNECTOR

2. DISCONNECT HIGH-TENSION CORD FROM IGNITION COIL (See procedure step 3 on pages IG-16 and 17)

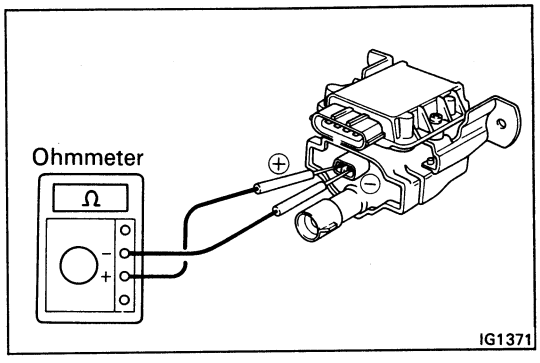

IG1371

3. INSPECT PRIMARY COIL RESISTANCE

Using an ohmmeter, measure the resistance between positive (+) and negative (–) terminals.

Primary coil resistance (Cold): 0.40 – 0.50 Ω

If the resistance is not as specified, replace the ignition coil.

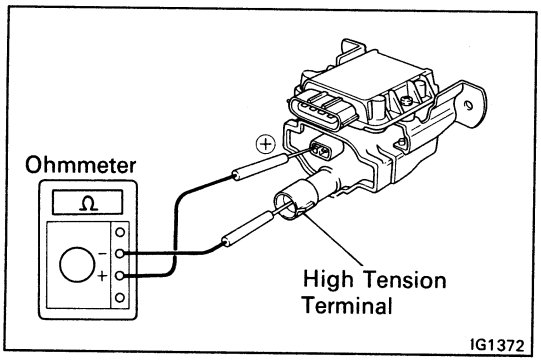

4. **INSPECT SECONDARY COIL RESISTANCE**

Using an ohmmeter, measure the resistance between positive (+) and high-tension terminals

Secondary coil resistance (Cold): 10.0 – 14.0 kΩ

If the resistance is not as specified, replace the ignition coil.

5. **RECONNECT HIGH-TENSION CORD TO IGNITION COIL (See procedure step 5 on pages IG-16 and 17)**

6. **RECONNECT IGNITION COIL CONNECTOR**

INSPECTION OF DISTRIBUTOR

1. **DISCONNECT DISTRIBUTOR CONNECTOR**

2. **REMOVE DISTRIBUTOR CAP**

3. **REMOVE ROTOR**

4. **INSPECT AIR GAP**

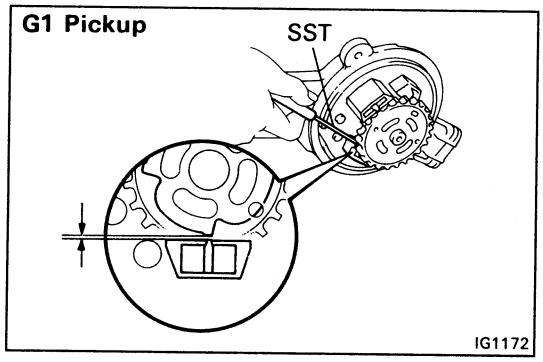

Using SST (G1 pickup) and a feeler gauge (NE pickup), measure the air gap between the signal rotor and pickup coil projection.

SST 09240-00020 for G1 pickup

Air gap: 0.2 mm – 0.4 mm (0.008 – 0.016 in.)

If the air gap is not as specified, replace the distributor housing assembly.

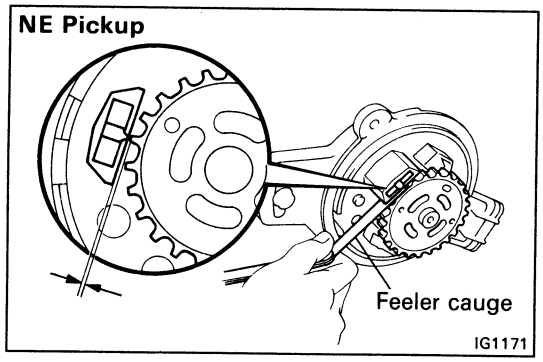

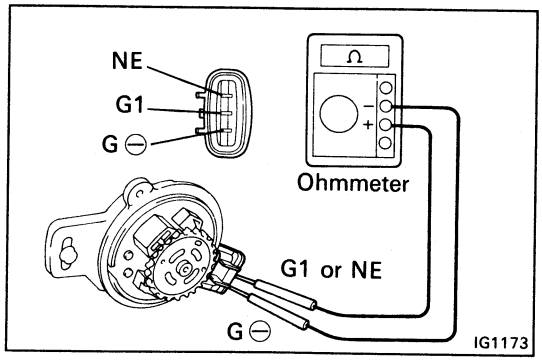

5. **INSPECT SIGNAL GENERATOR (PICKUP COIL) RESISTANCE**

Using an ohmmeter, measure the resistance between terminals (G1 and G⊖, NE and G⊖).

Pickup coil resistance (Cold): 170 – 210 Ω

If the resistance is not as specified, replace the distributor housing assembly.

6. **REINSTALL ROTOR**

7. **REINSTALL DISTRIBUTOR CAP**

8. **RECONNECT DISTRIBUTOR CONNECTOR**

INSPECTION OF IGNITER

(See procedure Spark Test on page IG-10)

DISTRIBUTOR (3S-GTE)

REMOVAL OF DISTRIBUTOR

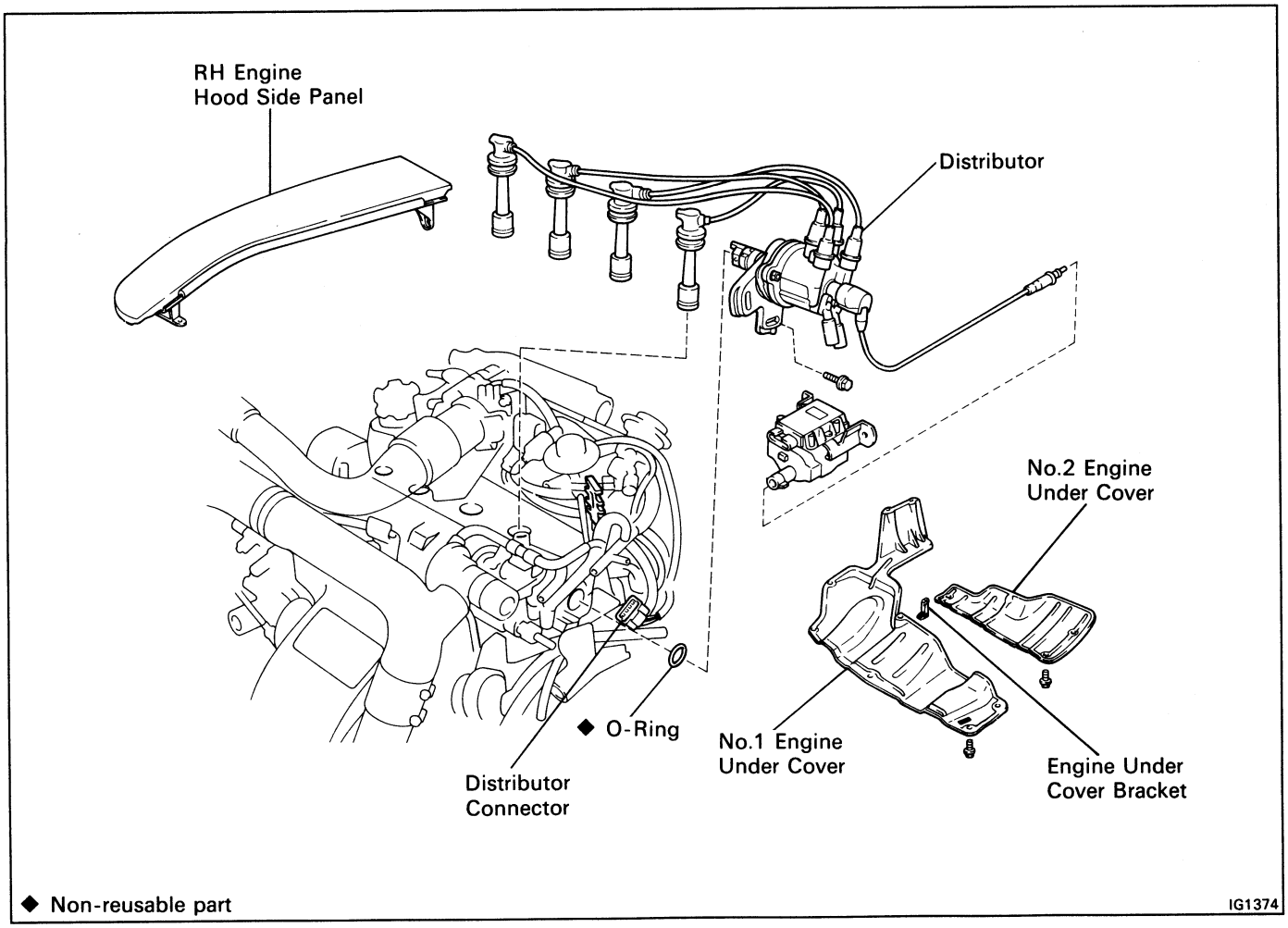

1. **DISCONNECT CABLE FROM NEGATIVE TERMINAL OF BATTERY**

   CAUTION: Work must be started after approx. 20 seconds or longer from the time the ignition switch is turned to the "LOCK" position and the negative (–) terminal cable is disconnected from the battery.

2. **DISCONNECT DISTRIBUTOR CONNECTOR**

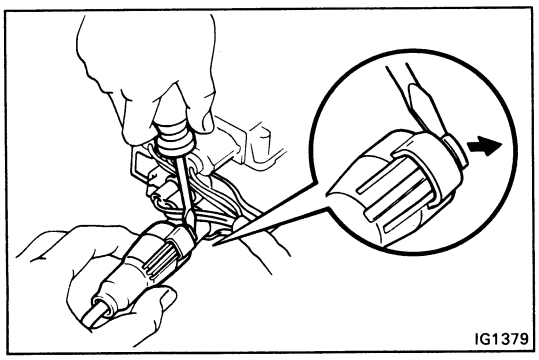

3. **DISCONNECT HIGH-TENSION CORD FROM IGNITION COIL**

   (a) Using a screwdriver, lift up the lock claw and disconnect the holder from the ignition coil.

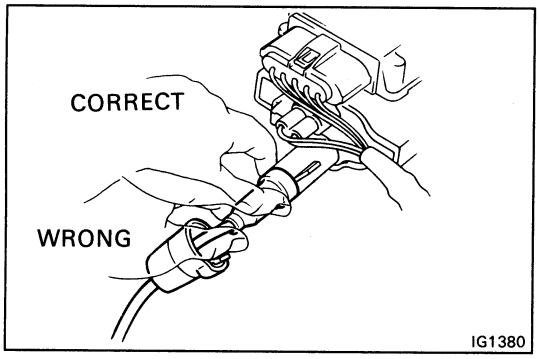

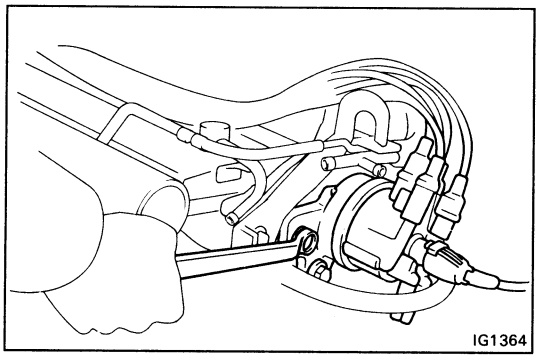

(b) Disconnect the high-tension cord at the grommet. DO NOT pull on the cord.

NOTICE: Pulling on or bending the cords may damage the conductor inside.

4. **DISCONNECT HIGH-TENSION CORDS FROM SPARK PLUGS**

(a) Disconnect the four high-tension cords from the cord clamp.

(b) Disconnect the four high-tension cords from the spark plugs. (See page IG-6)

5. **REMOVE DISTRIBUTOR**

(a) Remove the two hold-down bolts, and pull out the distributor.

(b) Remove the O-ring from the distributor housing.

COMPONENTS

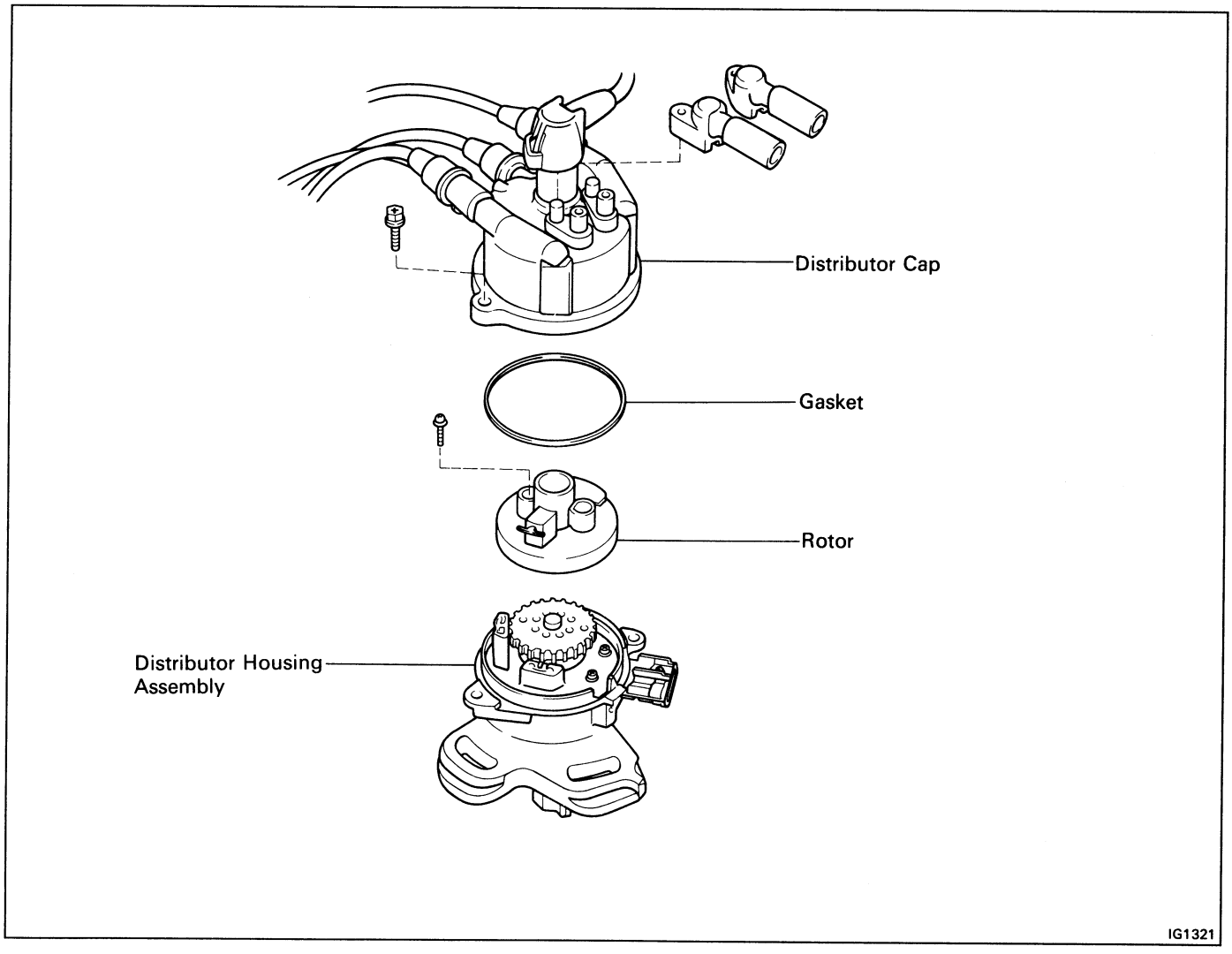

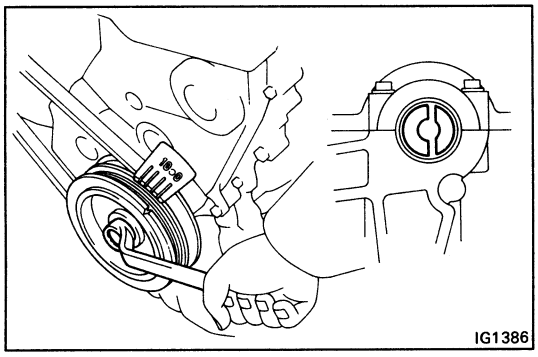

INSTALLATION OF DISTRIBUTOR

1. **REMOVE ENGINE UNDER COVERS**

2. **REMOVE RH ENGINE HOOD SIDE PANEL**

3. **SET NO.1 CYLINDER TO TDC/COMPRESSION**

   Turn the crankshaft clockwise, and position the slit of the intake camshaft as shown.

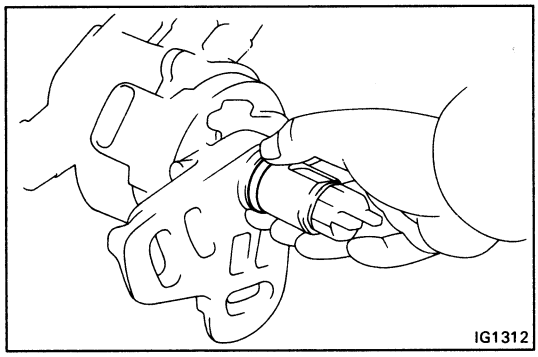

4. **INSTALL DISTRIBUTOR**

   (a) Install a new O-ring to the housing.

   (b) Apply a light coat of engine oil on the O-ring.

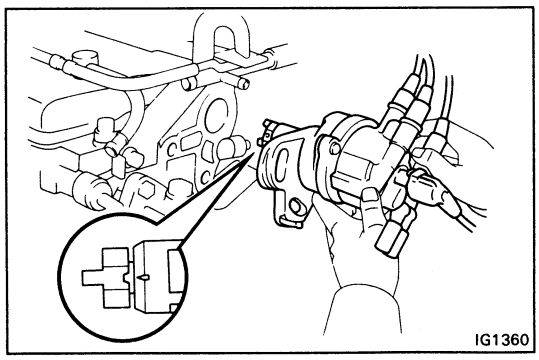

   (c) Align the cutout portion of the coupling with the groove of the housing.

   (d) Insert the distributor, aligning the center of the flange with that of the bolt hole on the cylinder head.

   (e) Lightly tighten the two hold-down bolts.

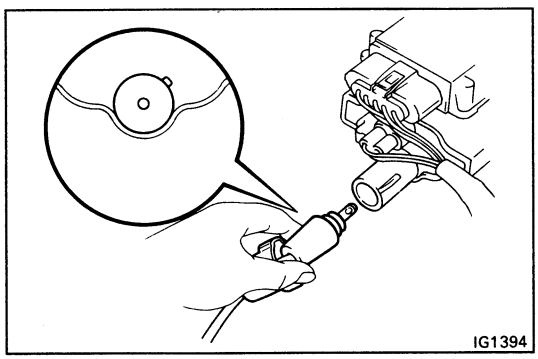

5. **CONNECT HIGH-TENSION CORD TO IGNITION COIL**

   (a) Insert the grommet portion into the terminal hole of the ignition coil.

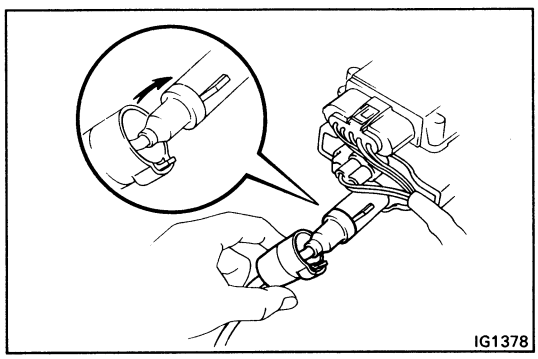

   (b) Align the spline of the ignition coil with the spline of the holder, and slide on the holder.

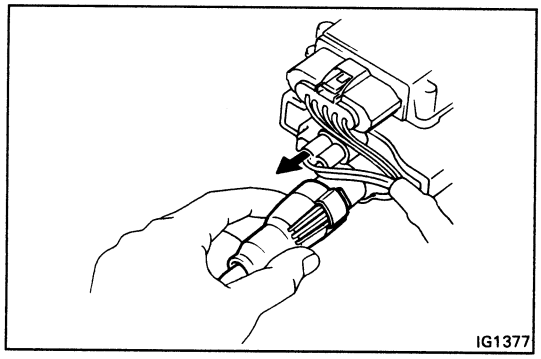

(c) Check that the lock claw of the holder is by lightly pulling the holder.

6. CONNECT HIGH-TENSION CORDS TO SPARK PLUGS

(a) Connect the four high-tension cords to the spark plugs.

Firing order: 1 – 3 – 4 – 2

(b) Install the four high-tension cords to the cord clamp.

7. CONNECT DISTRIBUTOR CONNECTOR

8. CONNECT CABLE TO NEGATIVE TERMINAL OF BATTERY

9. WARM UP ENGINE

Allow the engine to warm up to normal operating temperature.

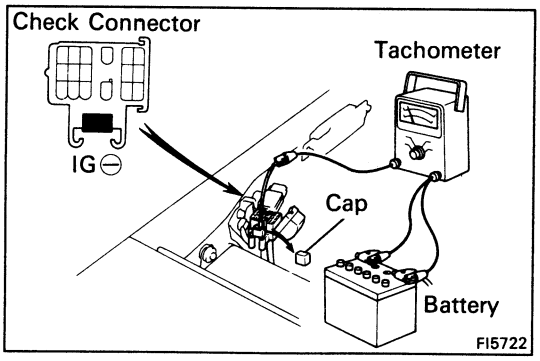

10. CONNECT TACHOMETER

Connect the test probe of a tachometer to terminal IG⊖ of the check connector.

NOTICE:

- **NEVER allow the tachometer terminal to touch ground as it could result in damage to the igniter and/or ignition coil.**
- **As some tachometers are not compatible with this ignition system, we recommend that you confirm the compatibility of yours before use.**

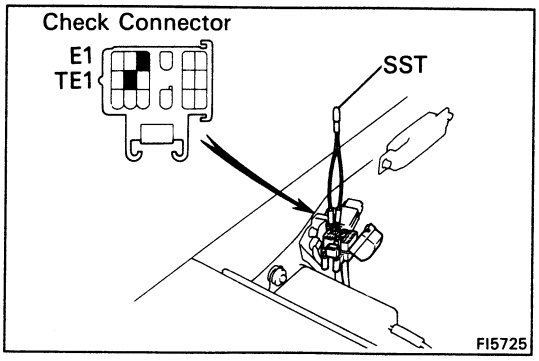

11. ADJUST IGNITION TIMING

(a) Using SST, connect terminals TE1 and E1 of the check connector.

SST 09843-18020

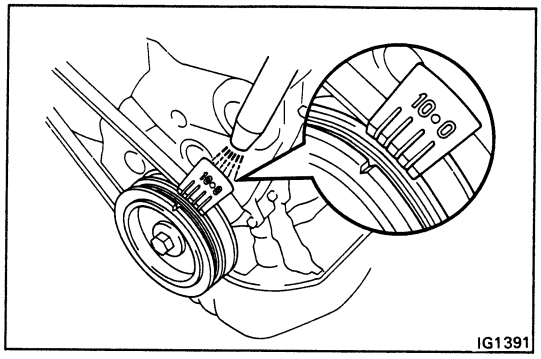

(b) Using a timing light, check the ignition timing.

Ignition timing: 10° BTDC @ idle (Transmission in neutral range)

(c) Loosen the two hold-down bolts, and adjust by turning the distributor.

(d) Tighten the two hold-down bolts, and recheck the ignition timing.

Torque: 400 kg-cm (29 ft-lb, 39 N·m)

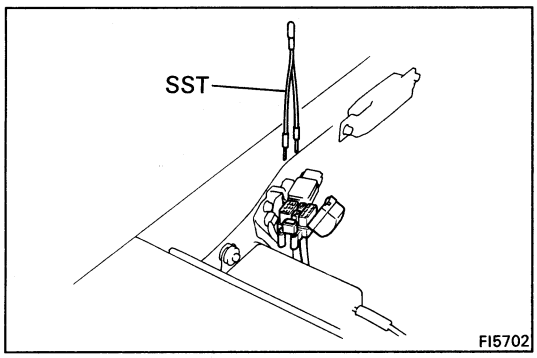

(e) Remove the SST.

SST 09843-18020

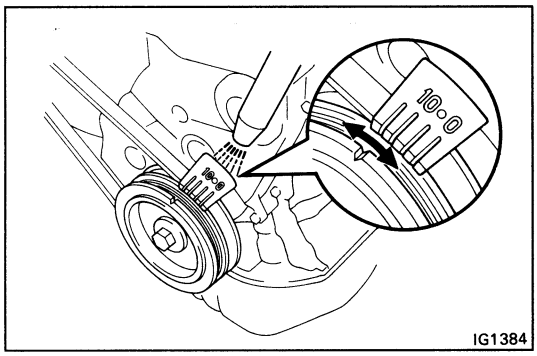

12. FURTHER CHECK IGNITION TIMING

Ignition timing: 12 – 21° BTDC @ idle
(Transmission in neutral range)

HINT: The timing mark moves in a range between 12° and 21°.

13. DISCONNECT TACHOMETER AND TIMING LIGHT FROM ENGINE

14. REINSTALL RH ENGINE HOOD SIDE PANEL

15. REINSTALL ENGINE UNDER COVERS

DISTRIBUTOR (5S-FE)

REMOVAL OF DISTRIBUTOR

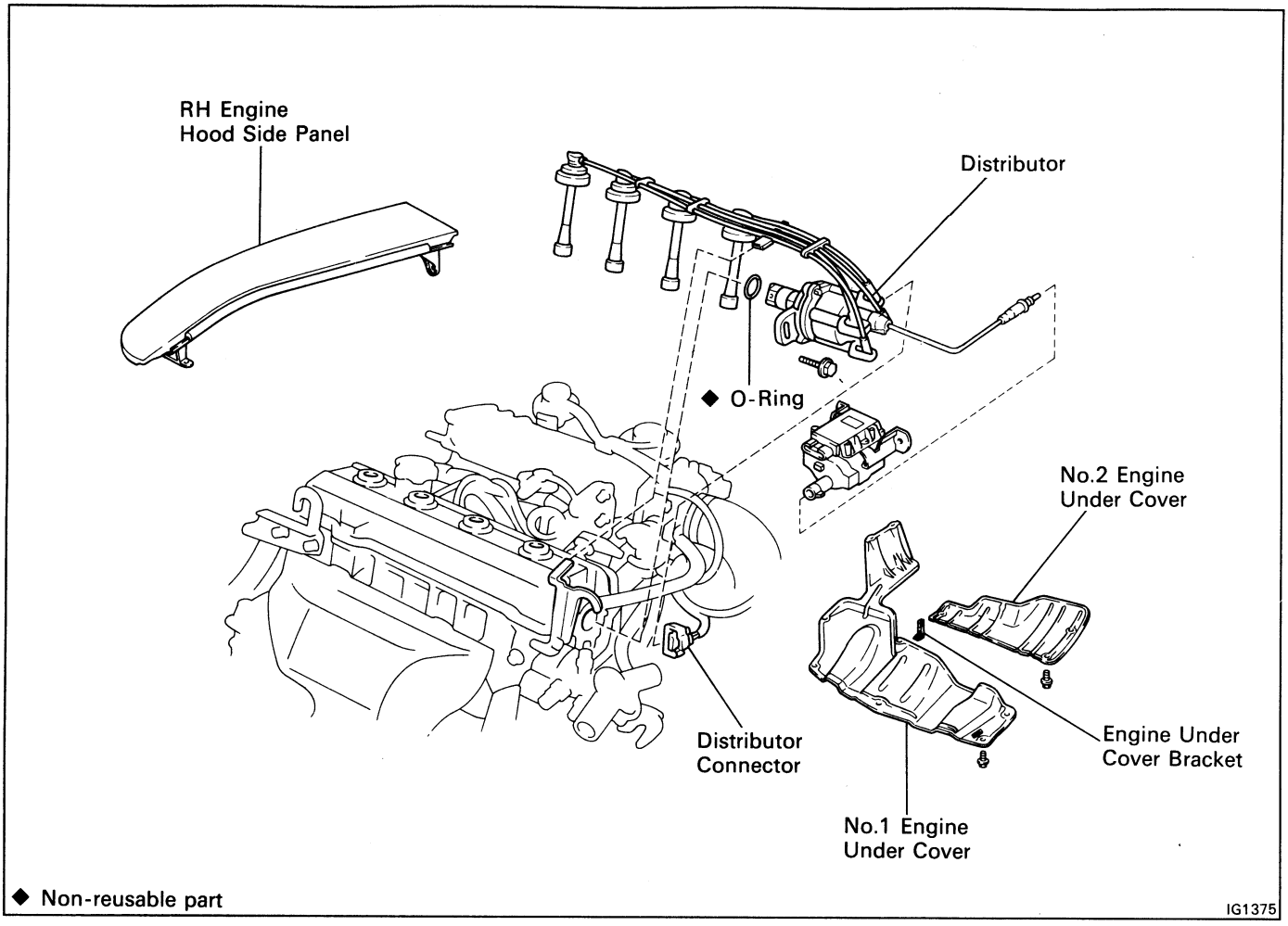

1. **DISCONNECT CABLE FROM NEGATIVE TERMINAL OF BATTERY**

   CAUTION: Work must be started after approx. 20 seconds or longer from the time the ignition switch is turned to the "LOCK" position and the negative (–) terminal cable is disconnected from the battery.

2. **DISCONNECT DISTRIBUTOR CONNECTOR**

3. **DISCONNECT HIGH-TENSION CORD FROM IGNITION COIL (See procedure step 3 on pages IG-14 and 15)**

4. **DISCONNECT HIGH-TENSION CORDS FROM SPARK PLUGS**

   (a) Disconnect the cord clamp from the engine hanger.

   (b) Disconnect the four high-tension cords from the spark plugs. (See page IG-11)

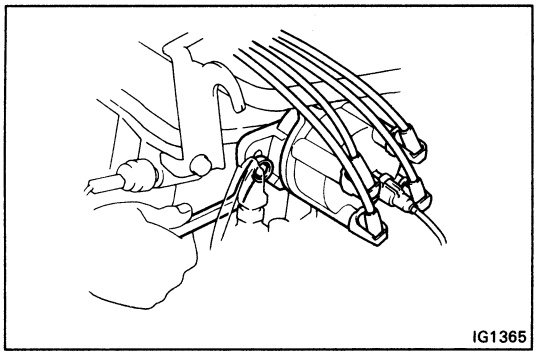

5. REMOVE DISTRIBUTOR

(a) Remove the hold-down bolt and pull out the distributor.

(b) Remove the O-ring from the distributor housing.

COMPONENTS

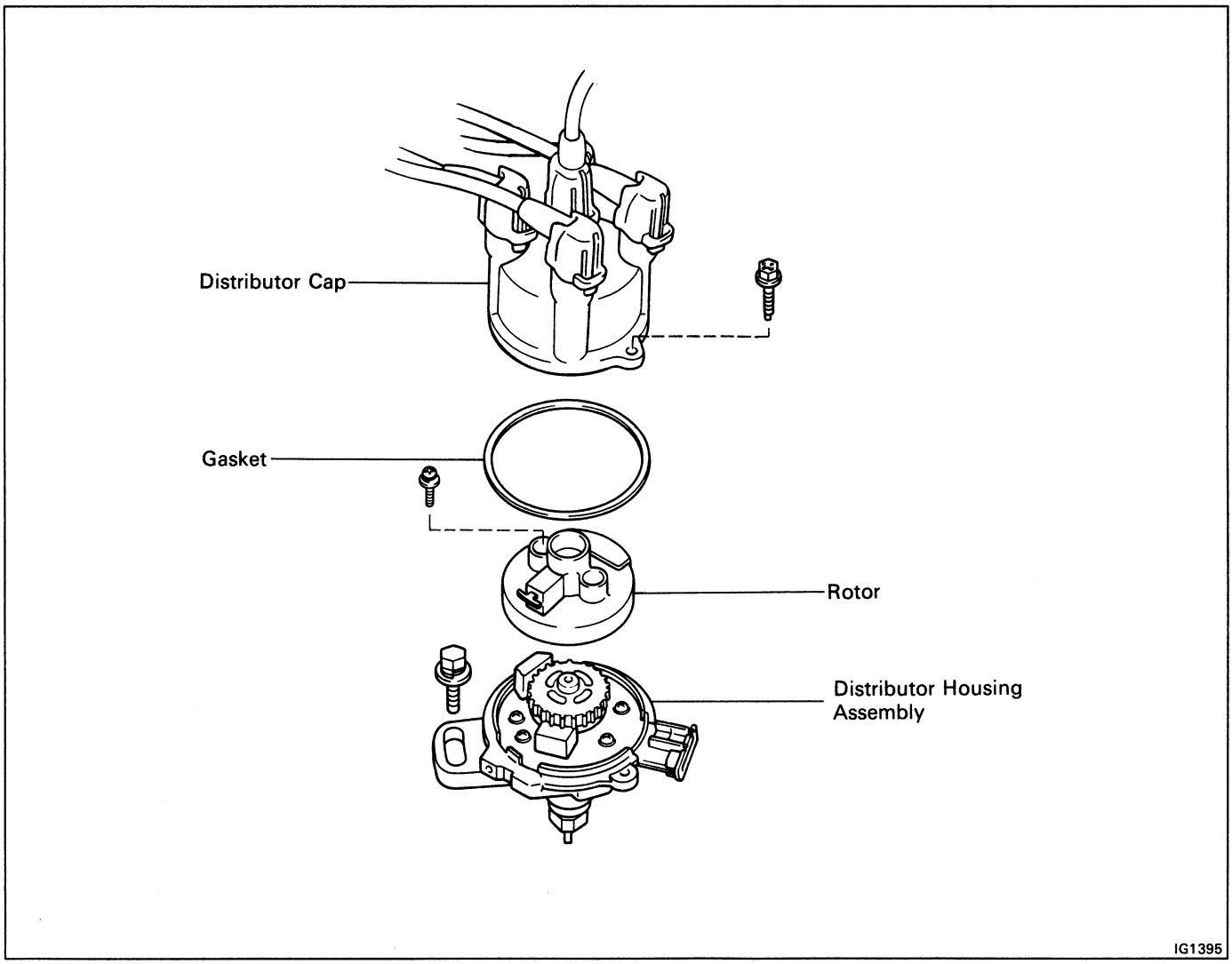

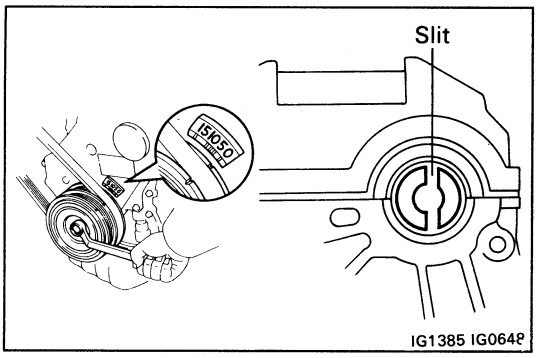

INSTALLATION OF DISTRIBUTOR

1. **REMOVE ENGINE UNDER COVERS**

2. **REMOVE RH ENGINE HOOD SIDE PANEL**

3. **SET NO.1 CYLINDER TO TDC/COMPRESSION**

   Turn the crankshaft clockwise, and position the slit of the intake camshaft as shown.

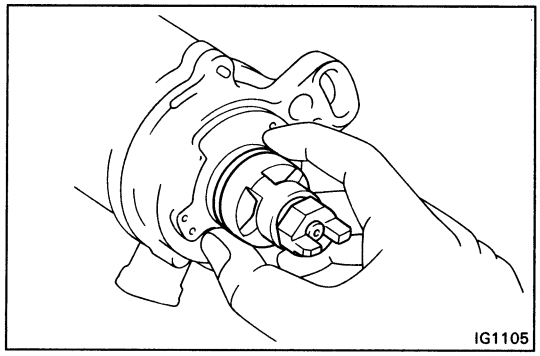

4. **INSTALL DISTRIBUTOR**

   (a) Install a new O-ring to the housing.

   (b) Apply a light coat of engine oil on the O-ring.

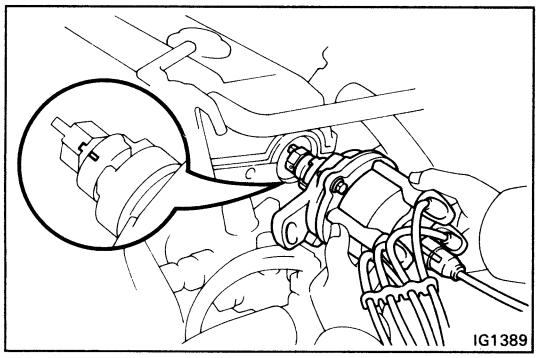

   (c) Align the cutout portion of the coupling with the groove of the housing.

   (d) Insert the distributor, aligning the center of the flange with that of the bolt hole on the cylinder head.

   (e) Lightly tighten the hold-down bolt.

   (f) Install the high-tension cord clamp to the rear engine hanger.

5. **CONNECT HIGH-TENSION CORD TO IGNITION COIL**
   (See procedure step 5 on pages IG-16 and 17)

6. **CONNECT HIGH-TENSION CORDS TO SPARK PLUGS**

   Firing order: 1 – 3 – 4 – 2

7. **CONNECT DISTRIBUTOR CONNECTOR**

8. **CONNECT CABLE TO NEGATIVE TERMINAL OF BATTERY**

9. **WARM UP ENGINE**

   Allow the engine to warm up to normal operating temperature.

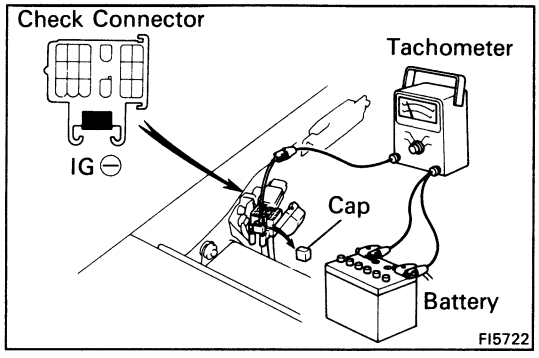

10. **CONNECT TACHOMETER**

    Connect the test probe of a tachometer to terminal IG⊖ of the check connector.

    NOTICE:

    - **NEVER allow the tachometer terminal to touch ground as it could result in damage to the igniter and/or ignition coil.**
    - **As some tachometers are not compatible with this ignition system, we recommend that you confirm the compatibility of yours before use.**

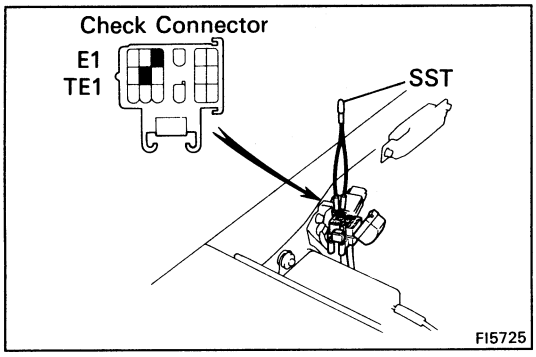

11. ADJUST IGNITION TIMING

(a) Using SST, connect terminals TE1 and E1 of the check connector.

SST 09843-18020

HINT: After engine rpm are kept at 1,000 – 1,300 rpm for 5 seconds, check that they return to idle speed.

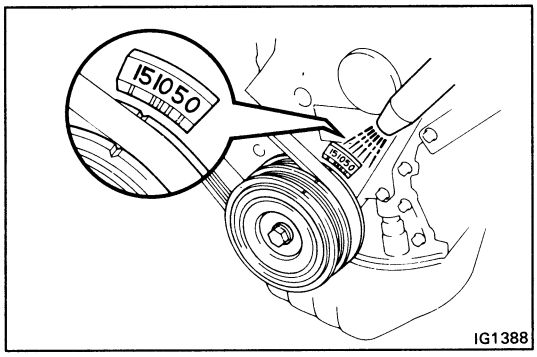

(b) Using a timing light, check the ignition timing.

Ignition timing: 10° BTDC @ idle (Transmission in neutral range)

(c) Loosen the hold-down bolt, and adjust by turning the distributor.

(d) Tighten the hold-down bolt, and recheck the ignition timing.

Torque: 130 kg-cm (9 ft-lb, 13 N·m)

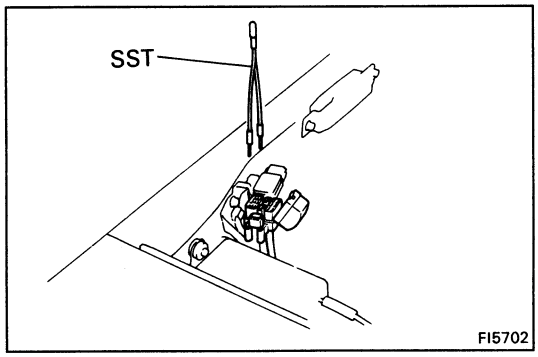

(e) Remove the SST.

SST 09843-18020

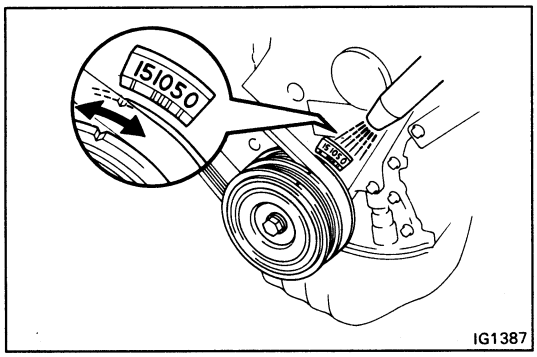

12. FURTHER CHECK IGNITION TIMING

Ignition timing: 13 – 22° BTDC @ idle (Transmission in neutral range)

HINT: The timing mark moves in a range between 13° and 22°.

13. DISCONNECT TACHOMETER AND TIMING LIGHT FROM ENGINE

14. REINSTALL RH ENGINE HOOD SIDE PANEL

15. REINSTALL ENGINE UNDER COVERS

STARTING SYSTEM

	Page
TROUBLESHOOTING	ST-2
STARTER	ST-3
STARTER RELAY	ST-18
CLUTCH STARTER SWITCH (M/T only)	ST-18

TROUBLESHOOTING

Problem	Possible cause	Remedy	Page
Engine will not crank	Battery charge low	Check battery specific gravity Check or replace battery	CH-3
	Battery cables loose, corroded or worn	Repair or replace cables	
	Clutch start switch faulty (M/T)	Adjust or replace clutch start switch	CL-5
	Neutral start switch faulty (A/T)	Adjust or repair switch	
	Starter relay faulty (M/T)	Replace starter relay	
	Fusible link blown	Replace fusible link	
	Starter faulty	Repair starter	ST-6
	Ignition switch faulty	Replace ignition switch	
Engine cranks slowly	Battery charge low	Check battery specific gravity Charge or replace battery	CH-3
	Battery cables loose, corroded or worn	Repair or replace cables	
	Starter faulty	Repair starter	ST-6
Starter keeps running	Starter faulty	Repair starter	ST-6
	Ignition switch faulty	Replace ignition switch	
	Short in wiring	Repair wiring	
Starter spins-engine will not crank	Pinion gear teeth broken or starter faulty	Repair starter	ST-6
	Flywheel teeth broken	Replace flywheel	

STARTER

REMOVAL OF STARTER

3S-GTE

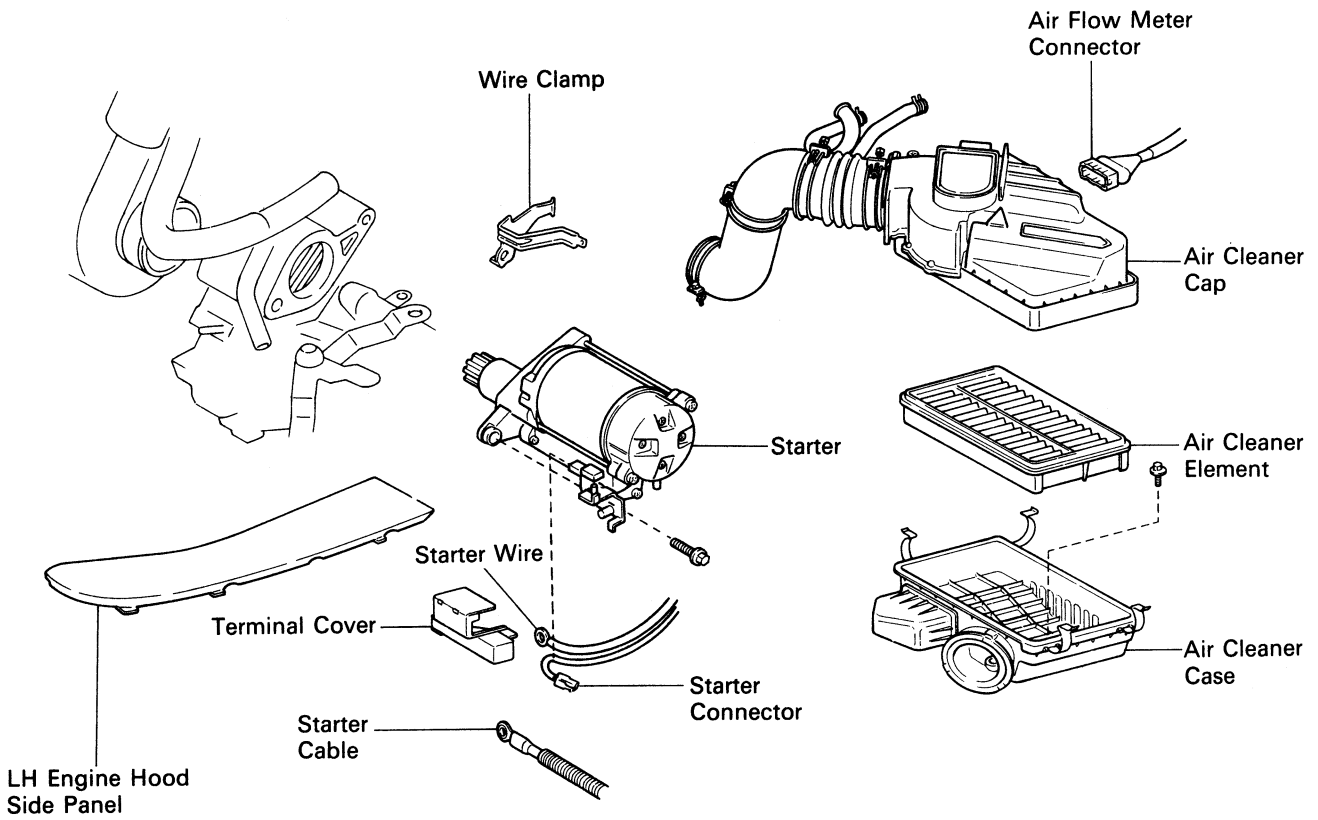

5S-FE

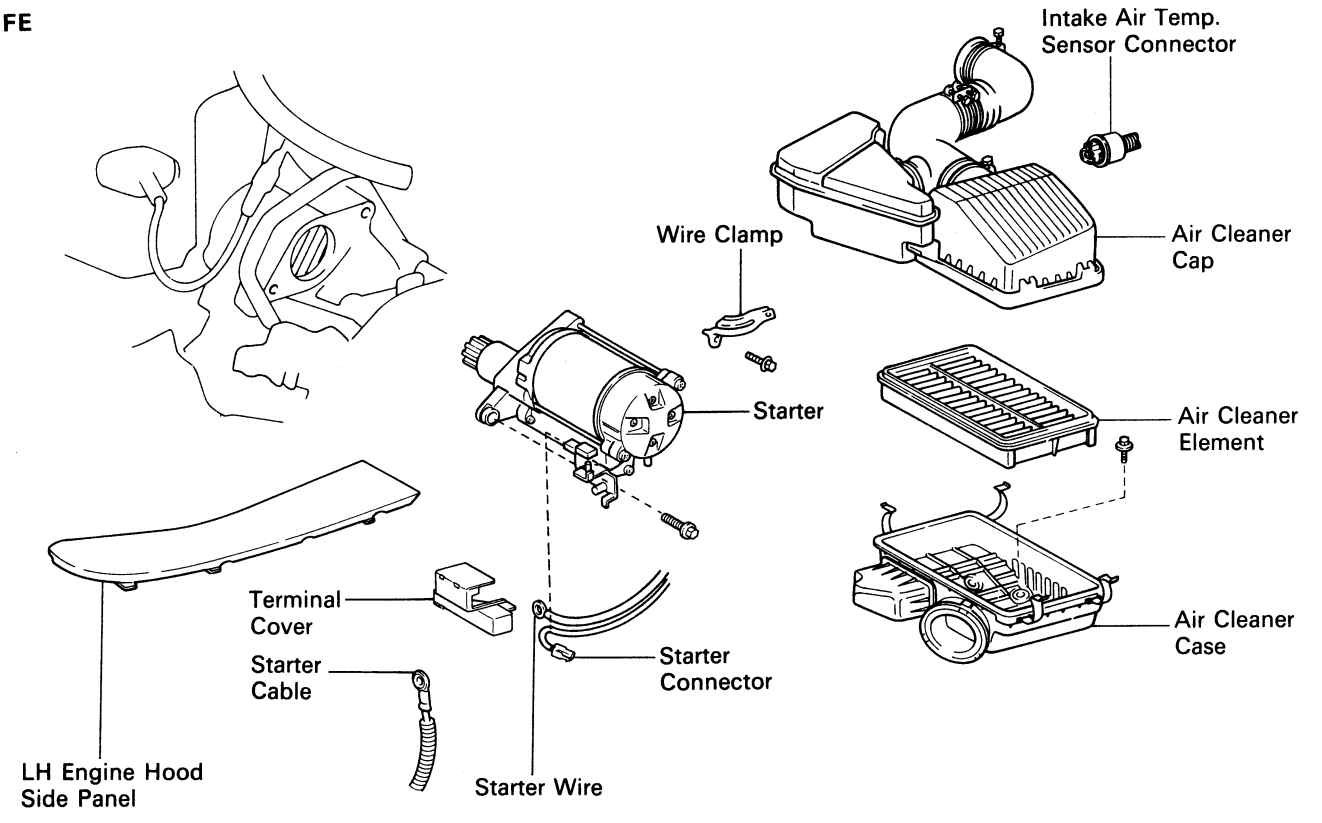

ST0888
ST0898

1. **DISCONNECT CABLE FROM NEGATIVE TERMINAL OF BATTERY**

   CAUTION: Work must be started after approx. 20 seconds or longer from the time the ignition switch is turned to the "LOCK" position and the negative (–) terminal cable is disconnected from the battery.

2. **REMOVE LH ENGINE HOOD SIDE PANEL**

3. **REMOVE AIR CLEANER**
   3S-GTE (See step 9 on page EM-134)
   5S-FE (See step 9 on page EM-182)

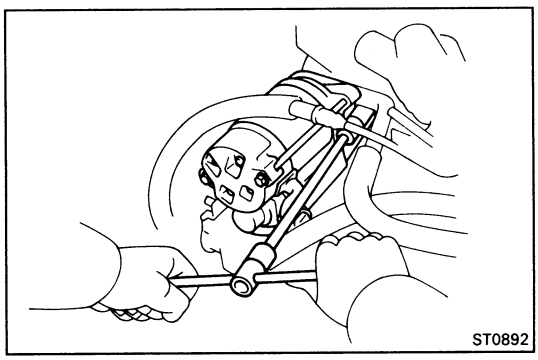

4. **REMOVE STARTER**
   (a) Remove the terminal cover.
   (b) Remove the nut, and disconnect the starter cable.
   (c) Remove the nut, and disconnect the starter wire.
   (d) Disconnect the starter connector.
   (e) Remove the two bolts, wire clamp and starter.

COMPONENTS

1.0 kW Type

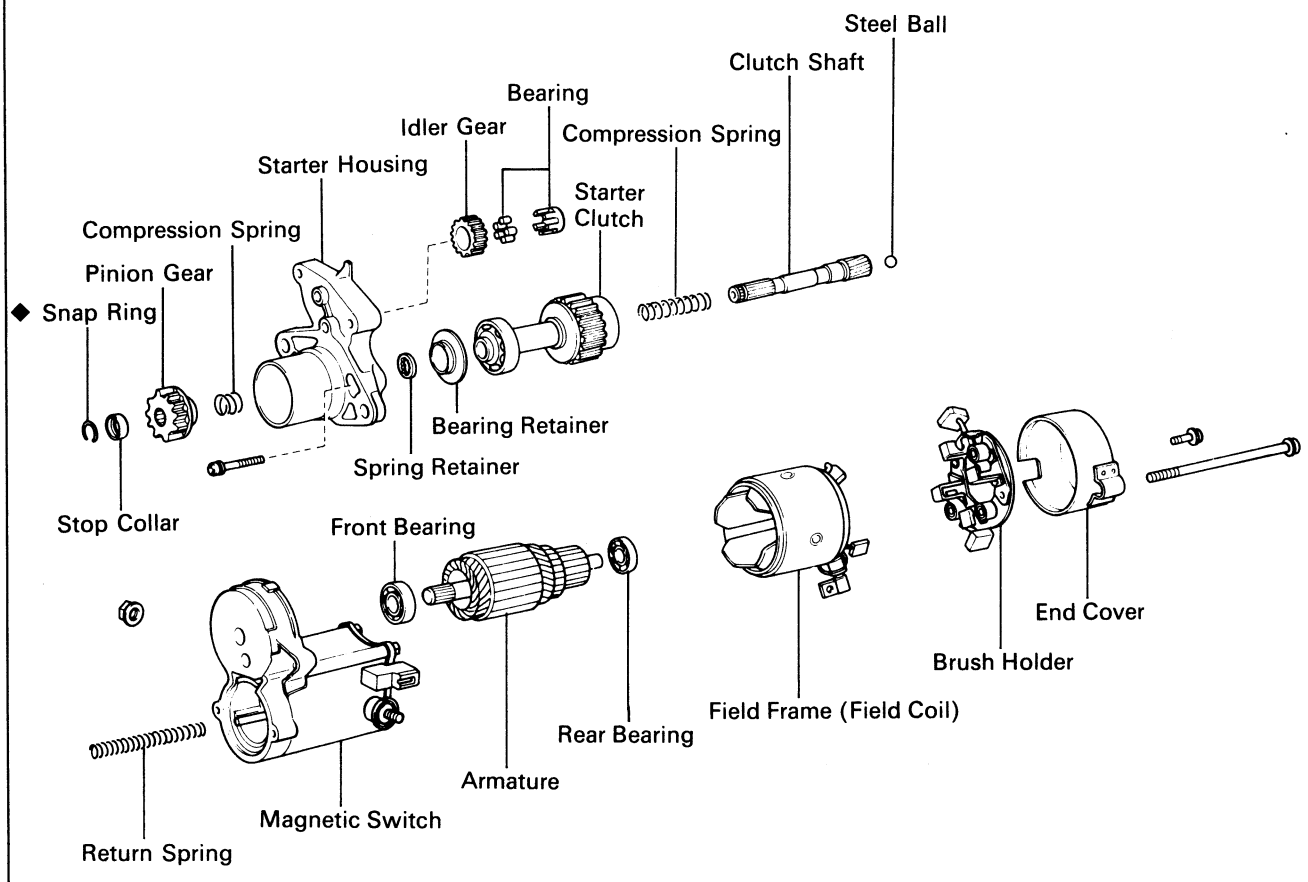

◆ Non-reusable part

ST0421

COMPONENTS (Cont'd)

1.4 kW (Conventional) and 1.6 kW Types

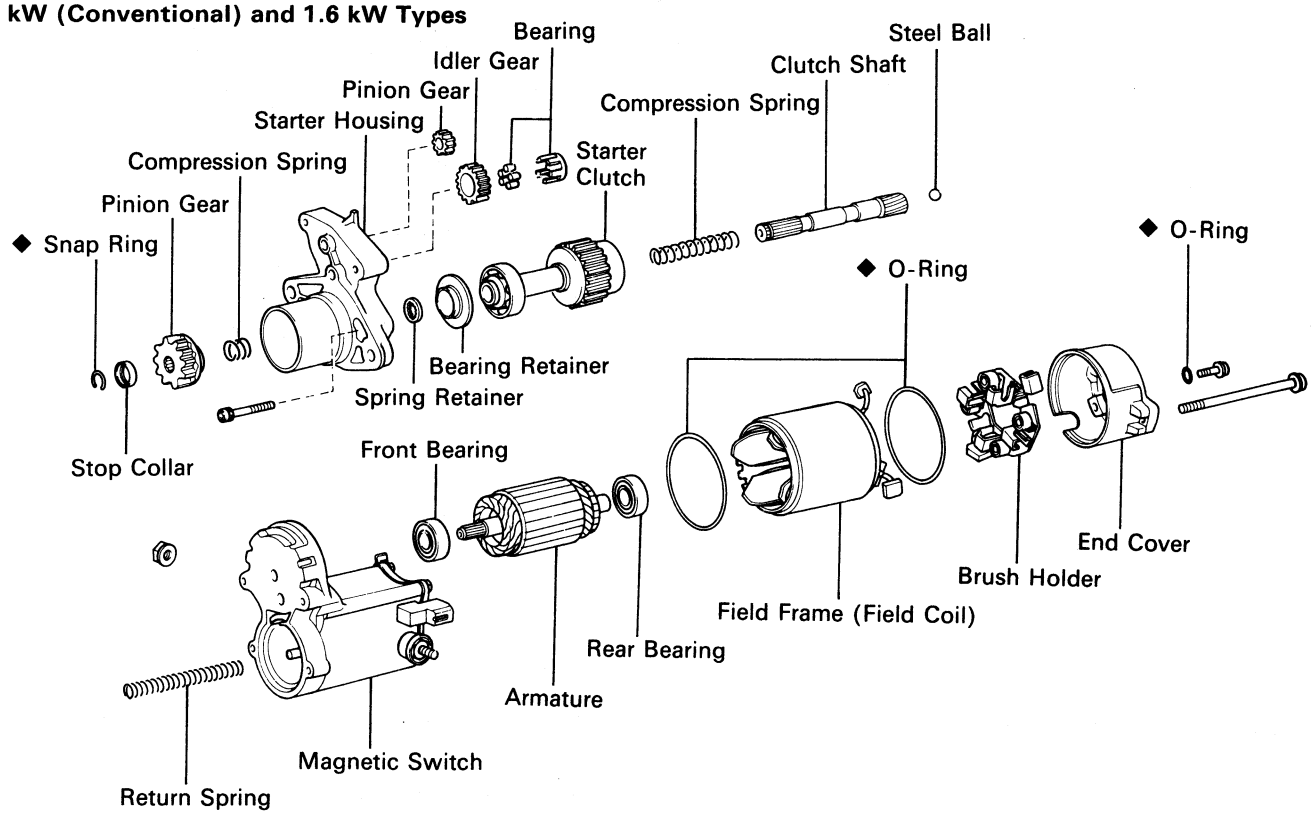

1.4 kW (Compact) Type

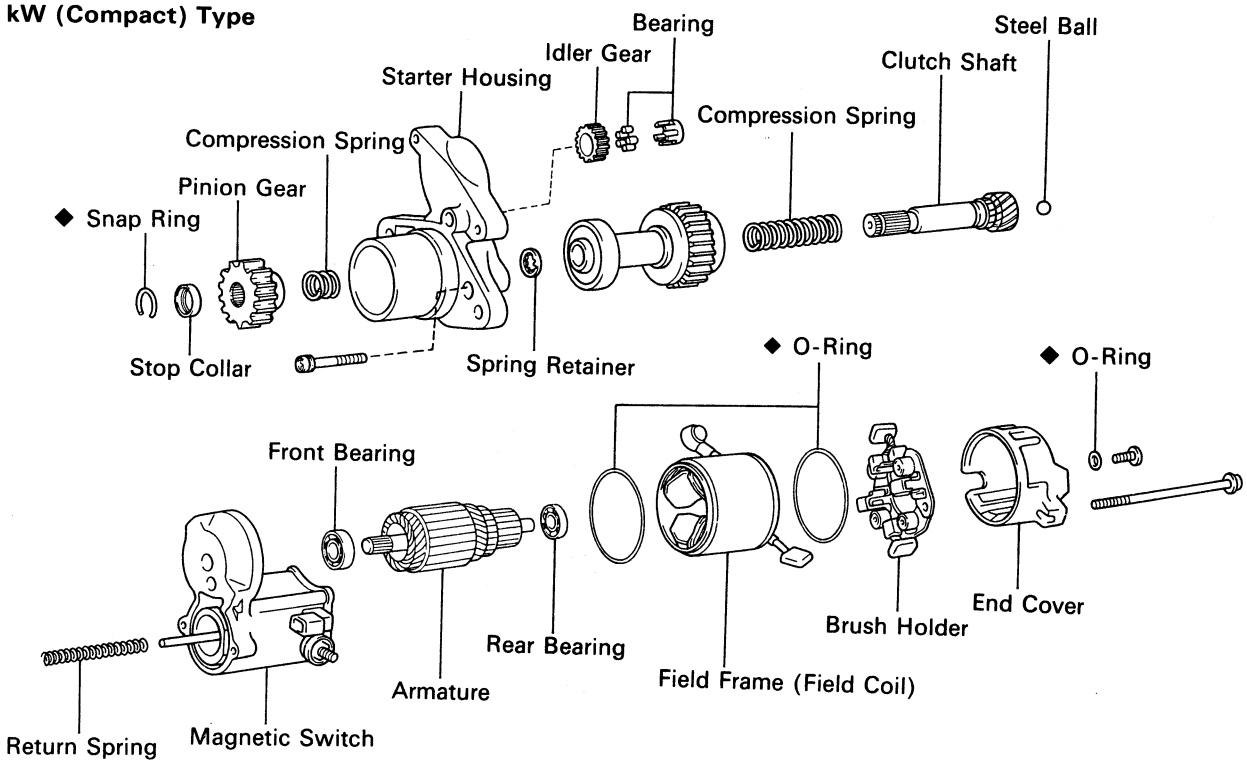

◆ Non-reusable part

ST0422
ST0850

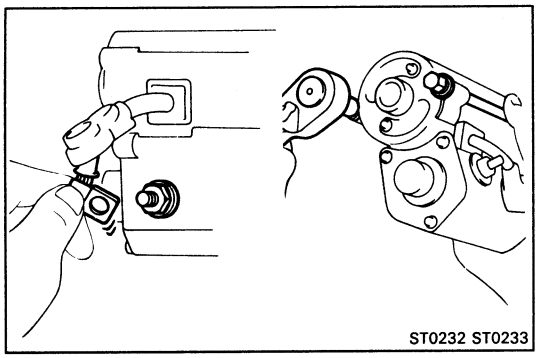

DISASSEMBLY OF STARTER

(See page ST-4 or 5)

1. REMOVE FIELD FRAME AND ARMATURE

(a) Remove the nut, and disconnect the lead wire from the magnetic switch terminal.

(b) Remove the two through bolts, and pull out the field frame together with the armature.

(c) (1.4 kW and 1.6 kW Types)
Remove the O-ring from the field frame.

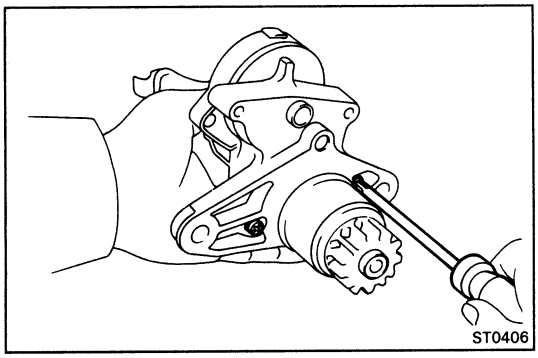

2. REMOVE STARTER HOUSING, CLUTCH ASSEMBLY AND GEAR(S)

(a) Remove the two screws.

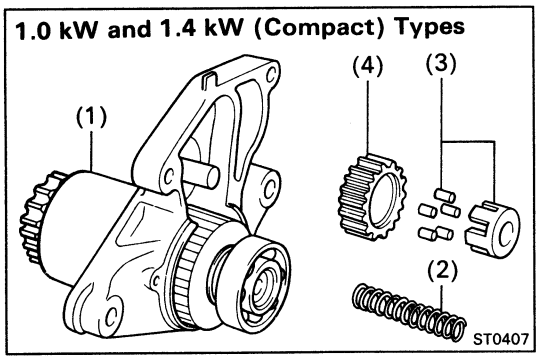

(b) Remove the following parts from the magnetic switch:

(1.0 kW and 1.4 kW (Compact) Types)

(1) Starter housing and clutch assembly
(2) Return spring
(3) Bearing
(4) Idler gear

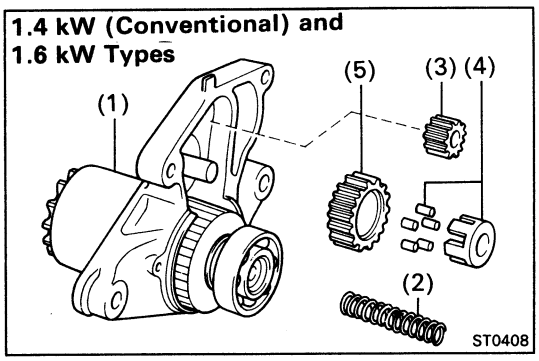

(1.4 kW (Conventional) and 1.6 kW Types)

(1) Starter housing and clutch assembly
(2) Return spring
(3) Pinion gear
(4) Bearing
(5) Idler gear

3. REMOVE STEEL BALL

Using a magnetic finger, remove the steel ball from the clutch shaft hole.

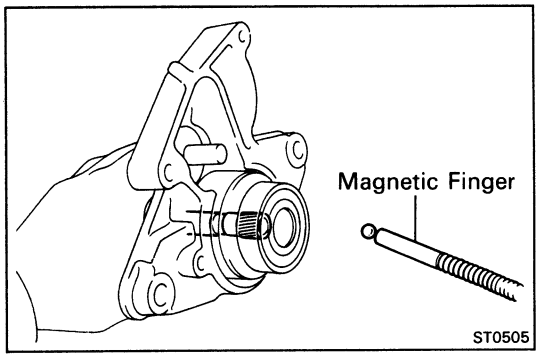

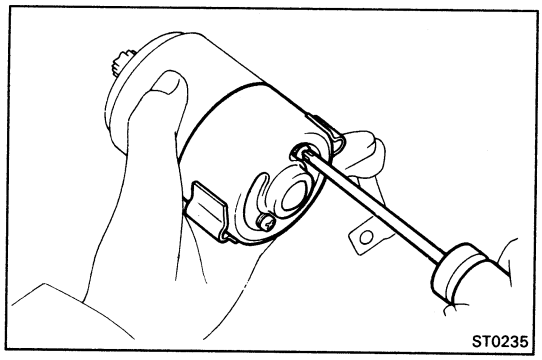

4. **REMOVE BRUSH HOLDER**

(a) Remove the two screws, two O-rings (1.4 kW and 1.6 kW types) and end cover from the field frame.

(b) (1.4 kW and 1.6 kW Types)
Remove the O-ring from the field frame.

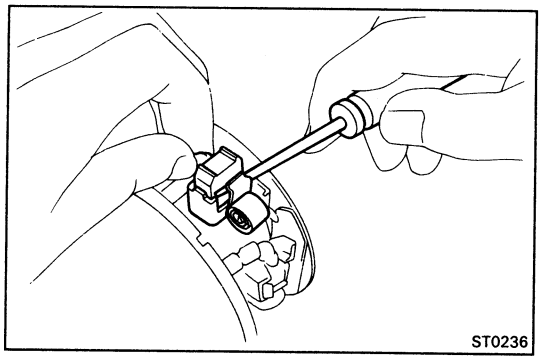

(c) Using a screwdriver, hold the spring back and disconnect the brush from the brush holder. Disconnect the four brushes, and remove the brush holder.

5. **REMOVE ARMATURE FROM FIELD FRAME**

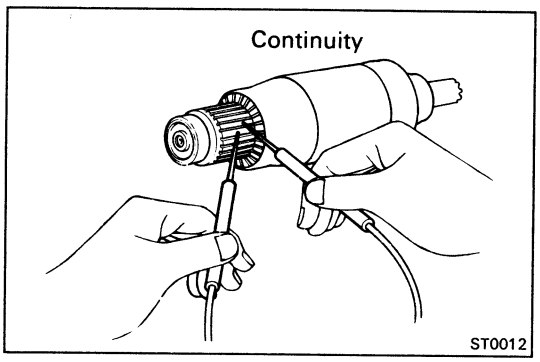

INSPECTION AND REPAIR OF STARTER

Armature Coil

1. **INSPECT COMMUTATOR FOR OPEN CIRCUIT**

Using an ohmmeter, check that there is continuity between the segments of the commutator.

If there is no continuity, replace the armature.

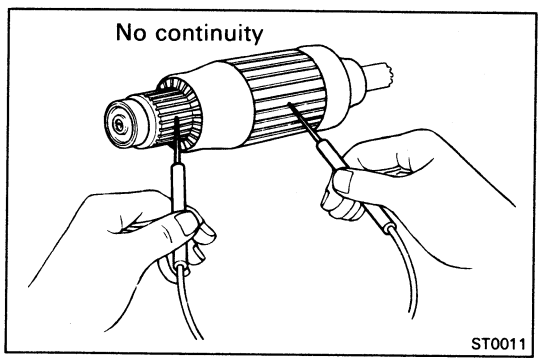

2. **INSPECT COMMUTATOR FOR GROUND**

Using an ohmmeter, check that there is no continuity between the commutator and armature coil core.

If there is continuity, replace the armature.

Commutator

1. **INSPECT COMMUTATOR FOR DIRTY AND BURNT SURFACE**

If the surface is dirty or burnt, correct with sandpaper (No.400) or on a lathe.

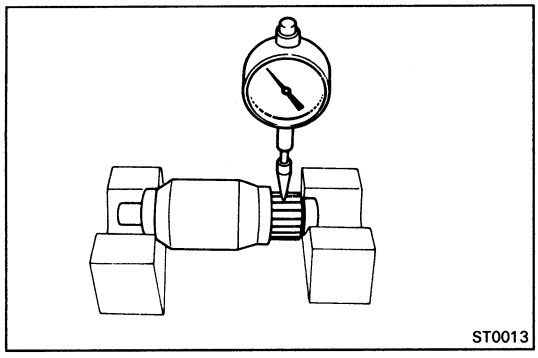

2. INSPECT COMMUTATOR FOR RUNOUT

(a) Place the commutator on V-blocks.

(b) Using a dial indicator, measure the circle runout.

Maximum circle runout: 0.05 mm (0.0020 in.)

If the circle runout is greater than maximum, correct it on a lathe.

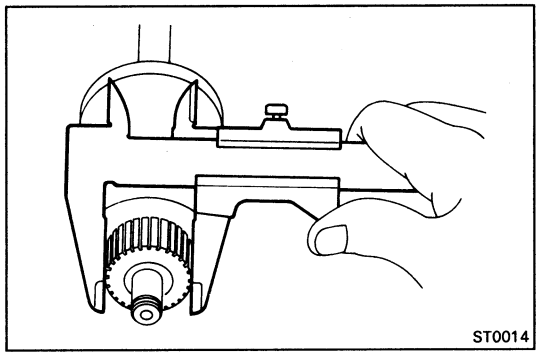

3. INSPECT COMMUTATOR DIAMETER

Using vernier calipers, measure the diameter.

Standard diameter: 30.0 mm (1.181 in.)

Minimum diameter: 29.0 mm (1.142 in.)

If the diameter is less than minimum, replace the armature.

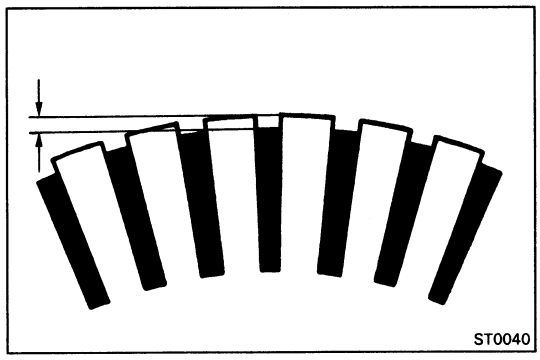

4. INSPECT UNDERCUT DEPTH

Check that the undercut depth is clean and free of foreign material. Smooth out the edge.

Standard undercut depth: 0.6 mm (0.024 in.)

Minimum undercut depth: 0.2 mm (0.008 in.)

If the undercut depth is less than minimum, correct it with a hacksaw blade.

Field Coil (Field Frame)

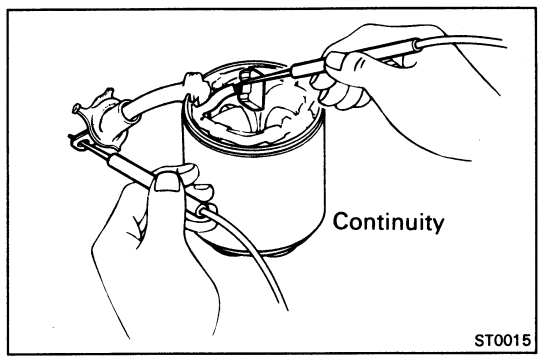

1. INSPECT FIELD COIL FOR OPEN CIRCUIT

Using an ohmmeter, check that there is continuity between the lead wire and field coil brush lead.

If there is no continuity, replace the field frame.

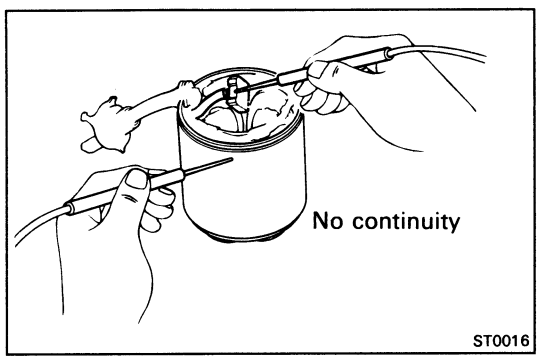

2. INSPECT FIELD COIL FOR GROUND

Using an ohmmeter, check that there is no continuity between the field coil end and field frame.

If there is continuity, replace the field frame.

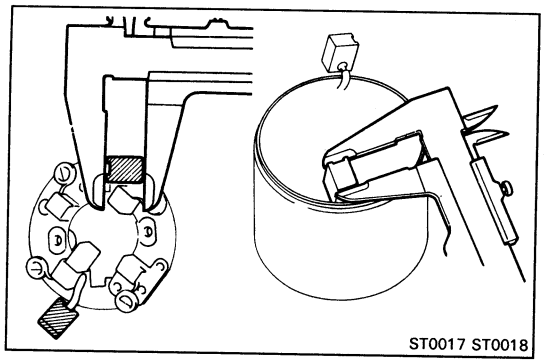

Brushes

INSPECT BRUSH LENGTH

Using vernier calipers, measure the brush length.

Standard length:

1.0 kW type	**13.5 mm (0.531 in.)**
1.4 kW and 1.6 kW types	**15.5 mm (0.610 in.)**

Minimum length:

1.0 kW type	**8.5 mm (0.335 in.)**
1.4 kW and 1.6 kW types	**10.0 mm (0.394 in.)**

If the length is less than minimum, replace the brush holder and field frame.

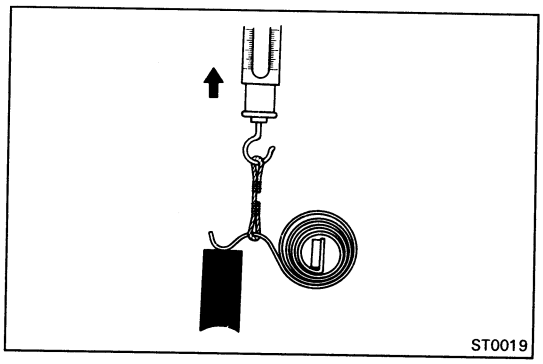

Brush Springs

INSPECT BRUSH SPRING LOAD

Take the pull scale reading the instant the brush spring separates from the brush.

Standard installed load:

1.79 – 2.41 kg (3.9 – 5.3 lb, 18 – 24 N)

If the installed load is not as specified, replace the brush springs.

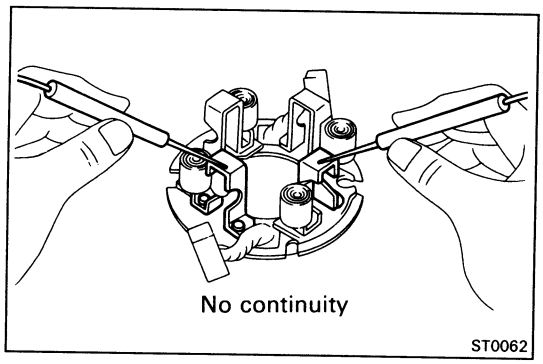

Brush Holder

INSPECT BRUSH HOLDER INSULATION

Using an ohmmeter, check that there is no continuity between the positive (+) and negative (–) brush holders.

If there is continuity, repair or replace the brush holder.

Clutch and Gears

1. INSPECT GEAR TEETH

Check the gear teeth on the pinion gear, idler gear and the clutch assembly for wear or damage.

If damaged, replace the gear or clutch assembly.

If damaged, also check the flywheel ring gear for wear or damage.

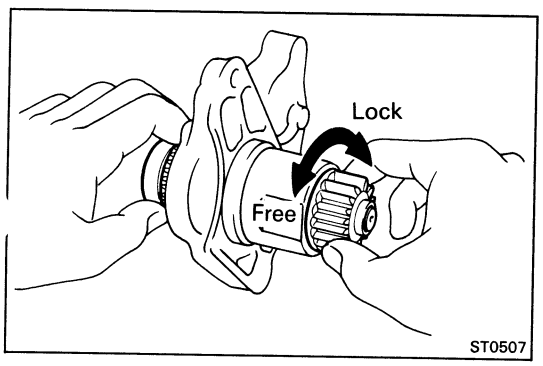

2. INSPECT CLUTCH PINION GEAR

Rotate the pinion gear counterclockwise and check that it turns freely. Try to rotate the pinion gear clockwise and check that it locks.

If necessary, replace the clutch assembly.

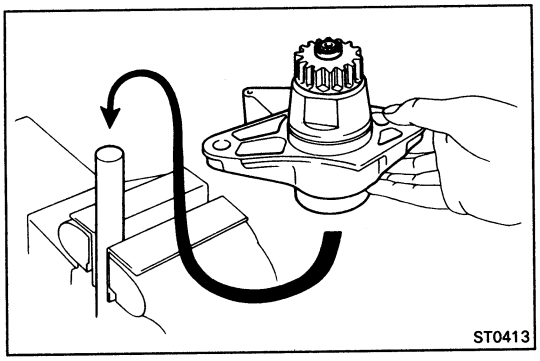

3. IF NECESSARY, REPLACE CLUTCH ASSEMBLY

A. Disassemble starter housing and clutch assembly

(a) Mount a brass bar in a vise, and install the starter housing and clutch assembly to the brass bar.

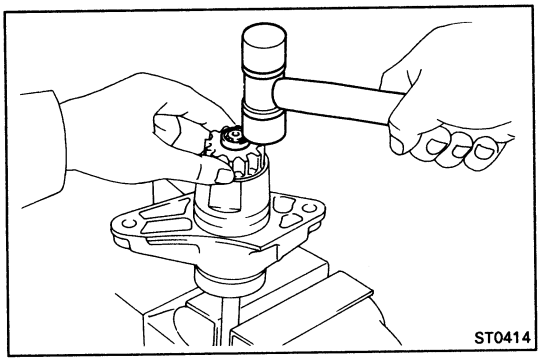

(b) Push down the pinion gear.

(c) Using a plastic-faced hammer, tap down the stop collar.

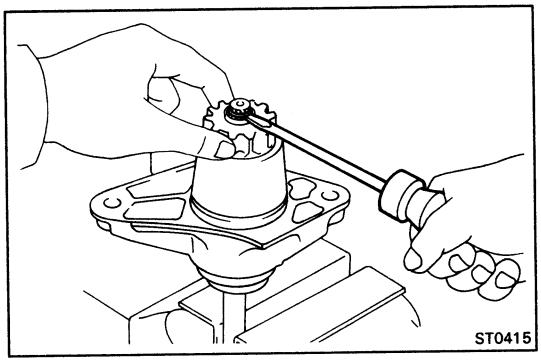

(d) Using a screwdriver, pry out the snap ring.

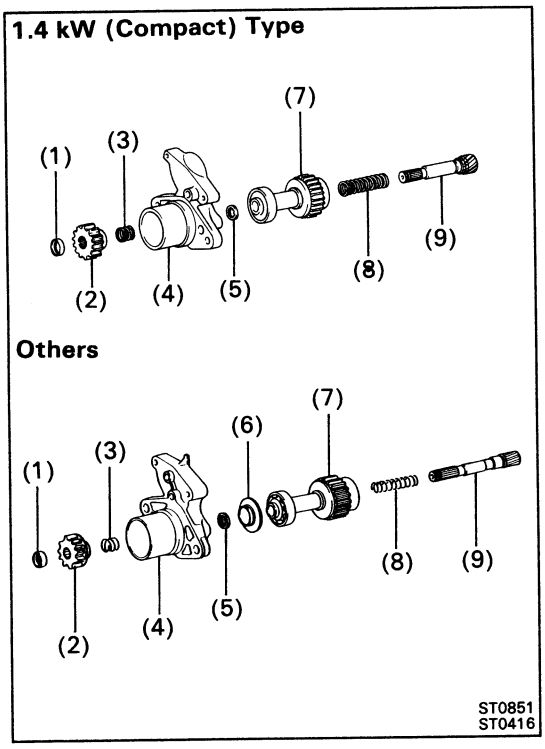

(e) Disassembly the following parts:

(1) Stop collar
(2) Pinion gear
(3) Compression spring
(4) Starter housing
(5) Spring retainer
(6) (Ex. 1.4 kW (Compact) Type) Bearing retainer
(7) Starter clutch
(8) Compression spring
(9) Clutch shaft

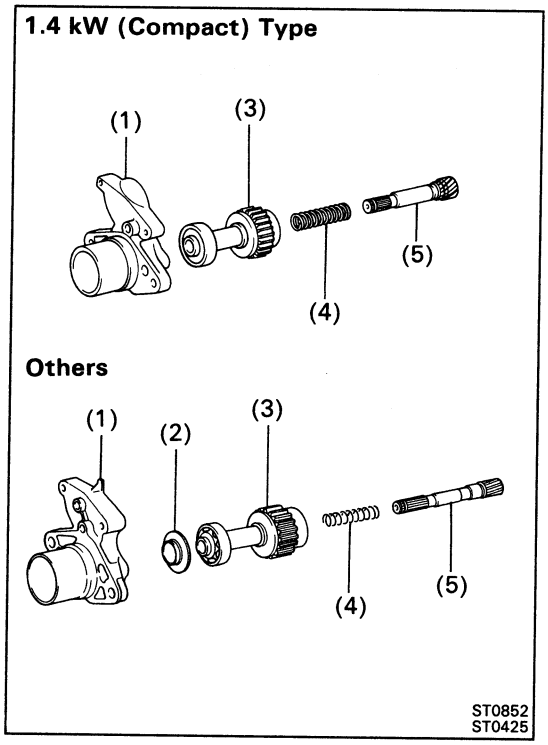

B. Assemble starter housing and clutch assembly

(a) Assemble the following part:

(1) Starter housing

(2) (Ex. 1.4 kW (Compact) Type) Bearing retainer

(3) Starter clutch

(4) Compression spring

(5) Clutch shaft

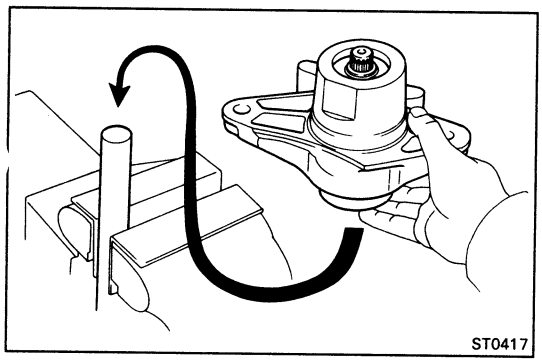

(b) Mount a brass bar in a vise, install the starter housing and clutch assembly to the brass bar.

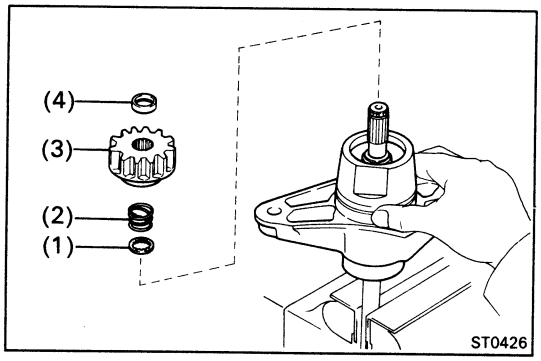

(c) Push down the starter housing, and install the following parts:

(1) Spring retainer

(2) Compression spring

(3) Pinion gear

(4) Stop collar

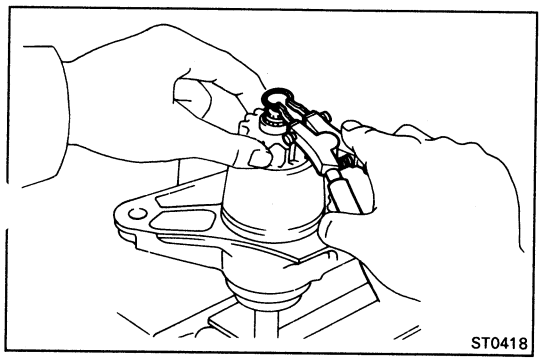

(d) Push down the pinion gear.

(e) Using snap ring pliers, install a new snap ring.

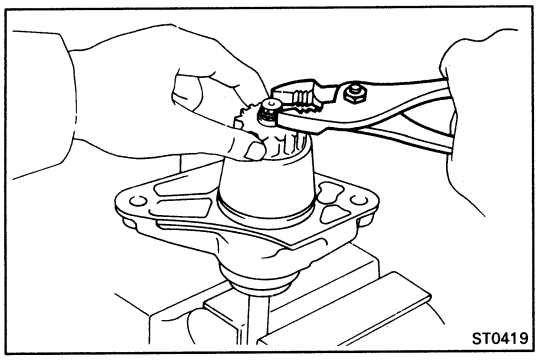

(f) Using pliers, compress the snap ring.

(g) Check that the snap ring fits correctly.

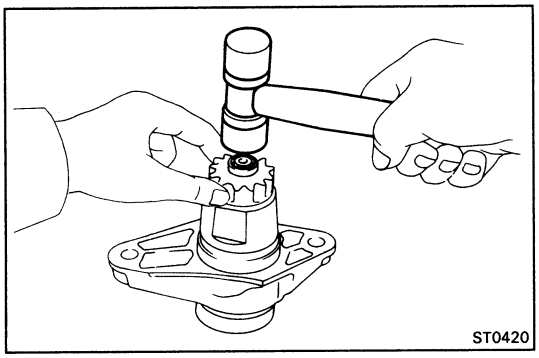

(h) Remove the starter housing and clutch assembly from the brass bar.

(i) Using a plastic-faced hammer, tap the clutch shaft and install the stop collar onto the snap ring.

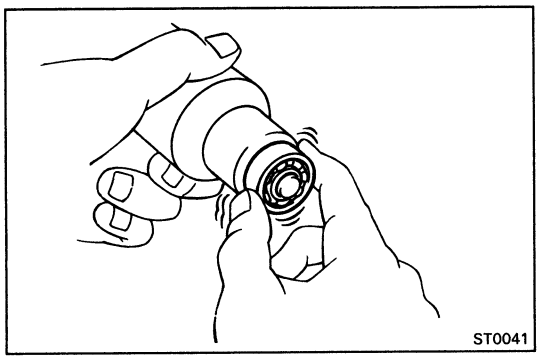

Bearings

1. INSPECT BEARINGS

Turn each bearing by hand while applying inward force.

If resistance is felt or if the bearing sticks, replace the bearing.

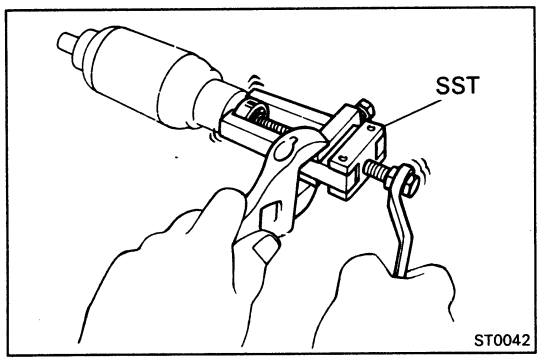

2. IF NECESSARY, REPLACE BEARINGS

(a) Using SST, remove the bearing.

SST 09286-46011

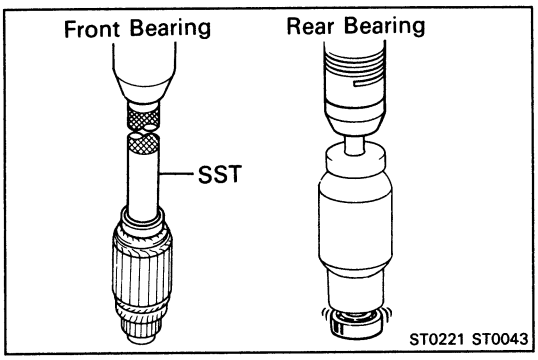

(b) Using SST and a press, press in a new front bearing.

SST 09201-41020 for1.4 kW (conventional) and 1.6 kW types
09285-76010 for1.0 kW type
09820-00030 for1.4 kW (compact) type

(c) Using a press, press in a new rear bearing.

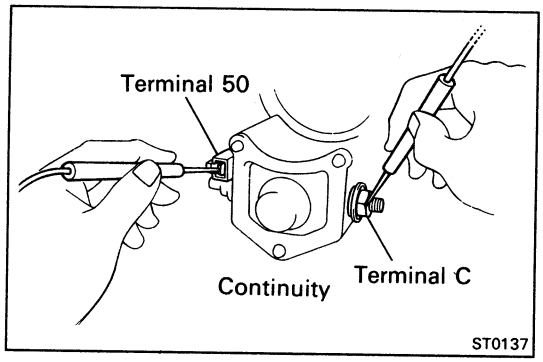

Magnetic Switch

1. PERFORM PULL-IN COIL OPEN CIRCUIT TEST

Using an ohmmeter, check that there is continuity between terminals 50 and C.

If there is no continuity, replace the magnetic switch.

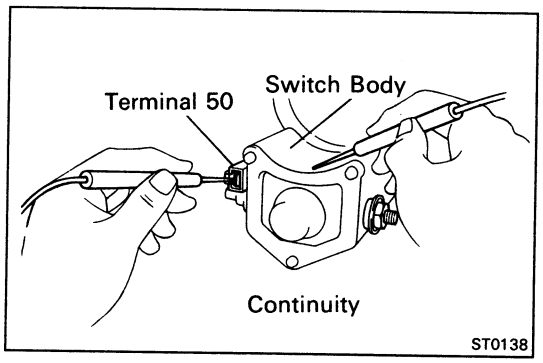

2. PERFORM HOLD-IN COIL OPEN CIRCUIT TEST

Using an ohmmeter, check that there is continuity between terminal 50 and the switch body.

If there is no continuity, replace the magnetic switch.

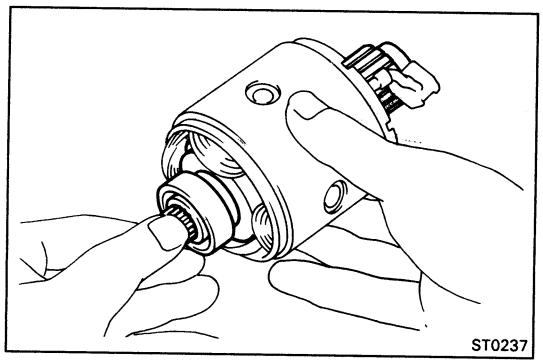

ASSEMBLY OF STARTER

(See page ST-4 or 5)

HINT: Use high-temperature grease to lubricate the bearings and gears when assembling the starter.

1. PLACE ARMATURE INTO FIELD FRAME

Apply grease to the armature bearings, and insert the armature into the field frame.

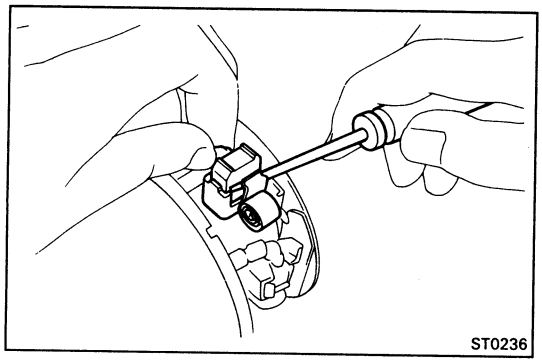

2. INSTALL BRUSH HOLDER

(a) Place the brush holder in position on the armature.

(b) Using a screwdriver, hold the brush spring back, and connect the brush into the brush holder. Connect the four brushes.

NOTICE: Check that positive (+) lead wires are not grounded.

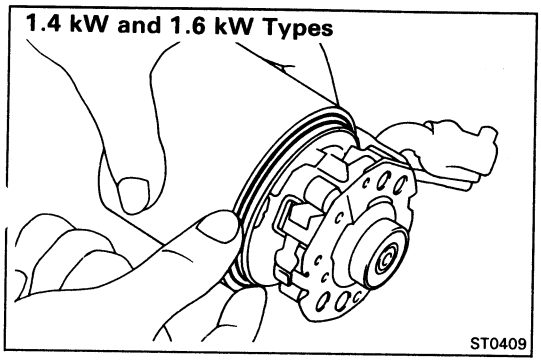

(c) (1.4 kW and 1.6 kW Types)
Place a new O-ring in position on the field frame.

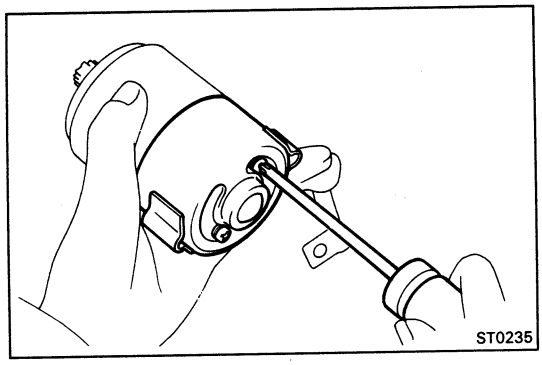

(d) Install the end cover with two new O-rings (1.4 kW and 1.6 kW types) and the two screws.

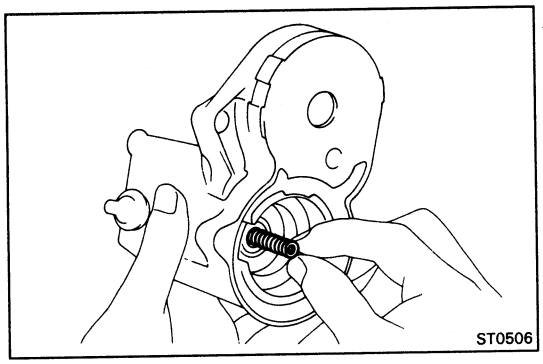

3. INSERT STEEL BALL INTO CLUTCH SHAFT HOLE

(a) Apply grease to the steel ball.

(b) Insert the steel ball into the clutch shaft hole.

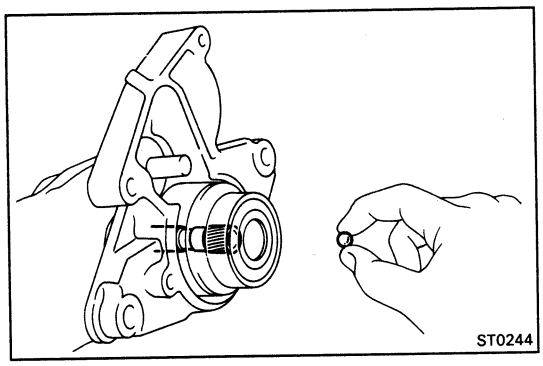

4. INSTALL GEAR(S)

(a) Apply grease to the return spring.

(b) Insert the return spring into the magnetic switch hole.

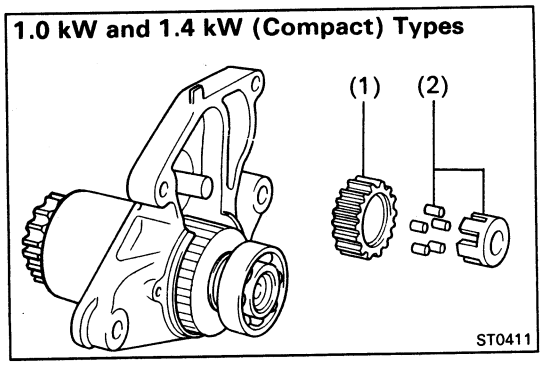

(c) Place the following parts in position on the starter housing:

(1.0 kW and 1.4 kW (Compact) Types)

(1) Idler gear

(2) Bearing

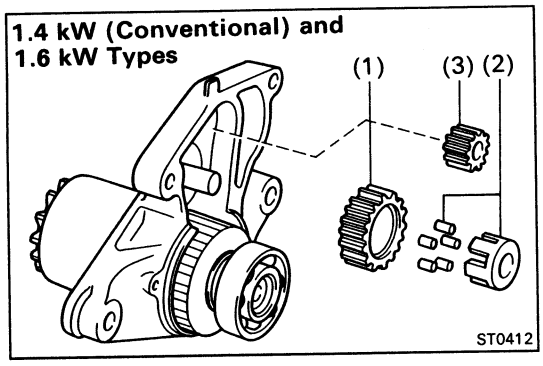

(1.4 kW (Conventional) and 1.6 kW Types)

(1) Idler gear

(2) Bearing

(3) Pinion gear

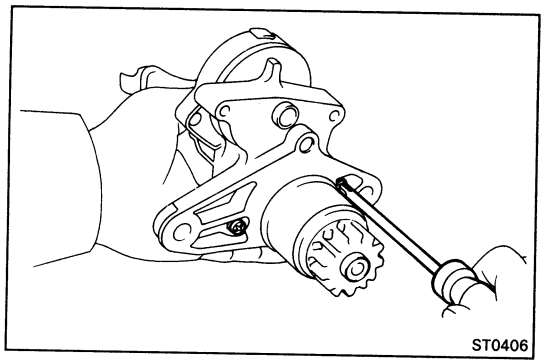

(d) Assemble the starter housing and magnetic switch with the two screws.

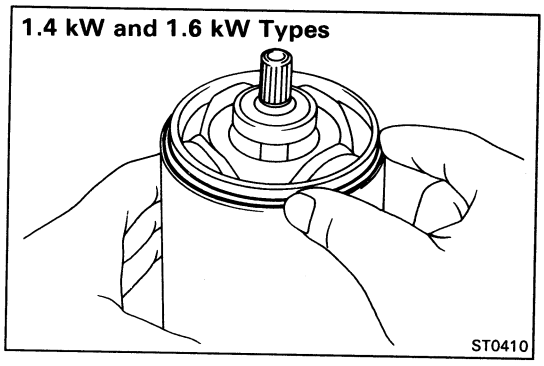

5. INSTALL FIELD FRAME AND ARMATURE ASSEMBLY

(a) (1.4 kW and 1.6 kW Types)
Place a new O-ring in position on the field frame.

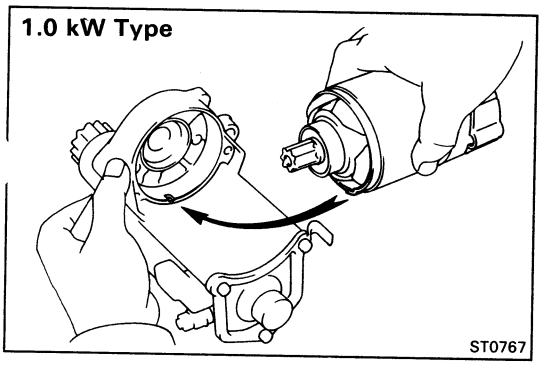

(b) Align the protrusion of the field frame with the cutout of the magnetic switch.

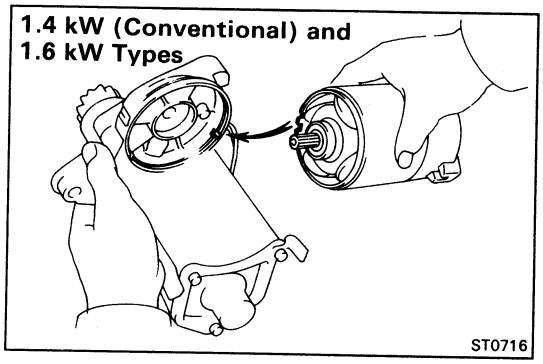

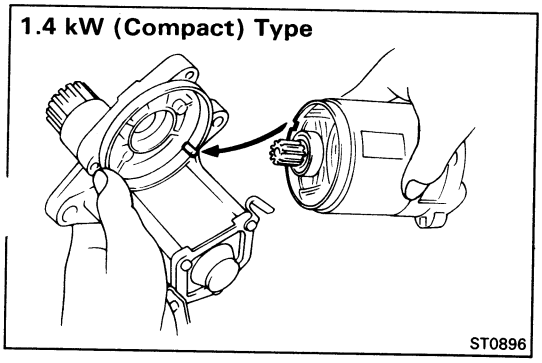

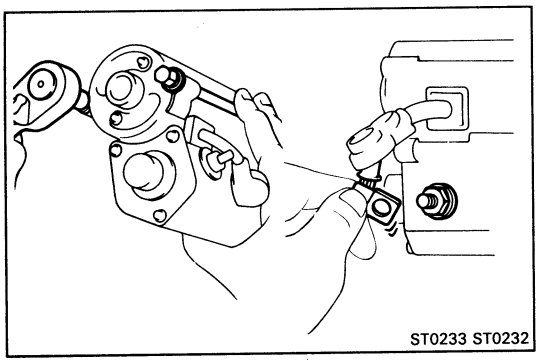

(c) Install the field frame and armature assembly with the two through bolts.

(d) Connect the lead wire to terminal C, and install the nut.

PERFORMANCE TEST OF STARTER

NOTICE: These tests must be performed within 3 to 5 seconds to avoid burning out the coil.

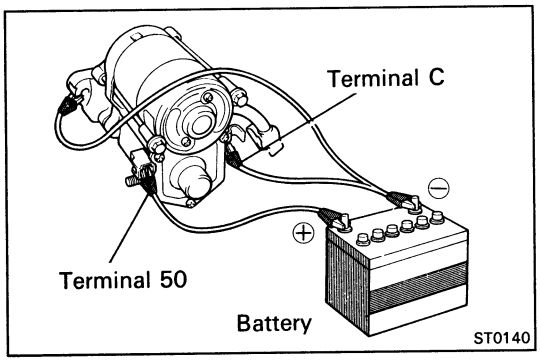

1. PERFORM PULL-IN TEST

(a) Disconnect the field coil lead wire from terminal C.

(b) Connect battery to the magnetic switch as shown. Check that the pinion gear moves outward.

If the pinion gear does not move, replace the magnetic switch.

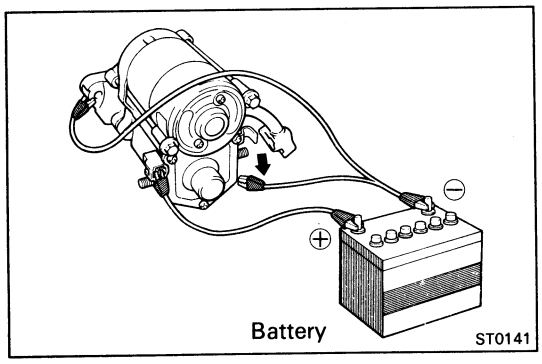

2. PERFORM HOLD-IN TEST

While connected as above with the pinion gear out, disconnect the negative (–) lead from terminal C. Check that the pinion gear remains out.

If the pinion gear returns inward, replace the magnetic switch.

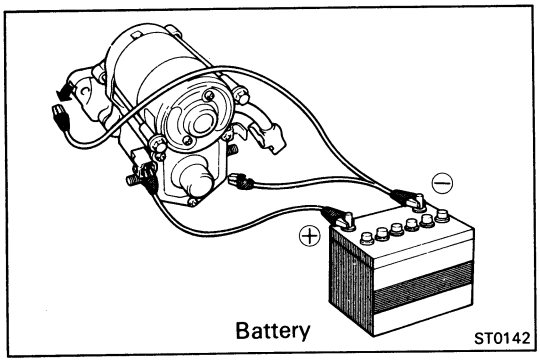

3. INSPECT PLUNGER RETURN

Disconnect the negative (+) lead from the switch body. Check that the pinion gear returns inward.

If the pinion gear does not return, replace the magnetic switch.

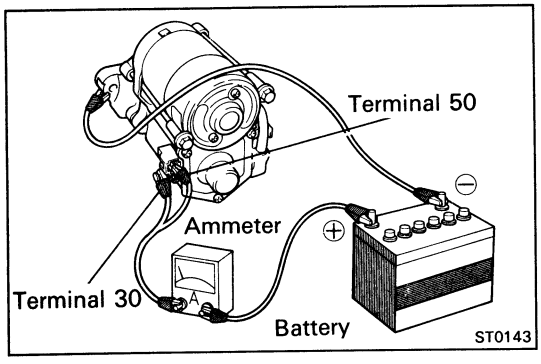

4. PERFORM NO-LOAD PERFORMANCE TEST

(a) Connect battery and ammeter to the starter as shown.

(b) Check that the starter rotates smoothly and steadily with the pinion gear moving out. Check the reading on the ammeter.

Standard amperage: 90 A or less at 11.5 V

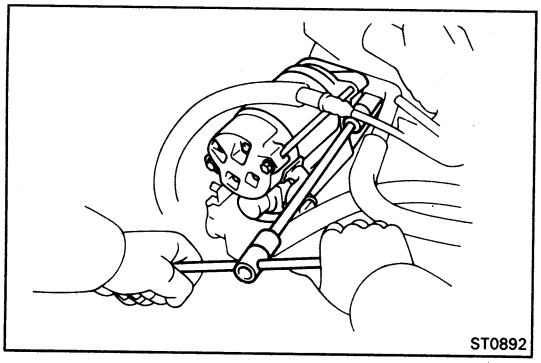

INSTALLATION OF STARTER

(See page ST-4)

1. **INSTALL STARTER**
   (a) Install the starter with the two bolts.
   Torque: 400 kg-cm (29 ft-lb, 39 N·m)
   (b) Connect the starter connector.
   (c) Connect the starter wire with the nut.
   (d) Connect the starter cable with the nut.
   (e) Install the terminal cover.

2. **INSTALL AIR CLEANER**
   3S-GTE (See step 40 on page EM-202)
   5S-FE (See step 35 on page EM-226)

3. **INSTALL LH ENGINE HOOD SIDE PANEL**

4. **CONNECT CABLE TO NEGATIVE TERMINAL OF BATTERY**

5. **CHECK THAT ENGINE STARTS**

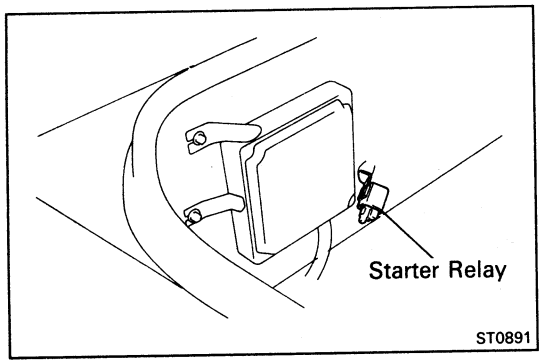

STARTER RELAY

INSPECTION OF STARTER RELAY

LOCATION: In the luggage compartment on the left side.

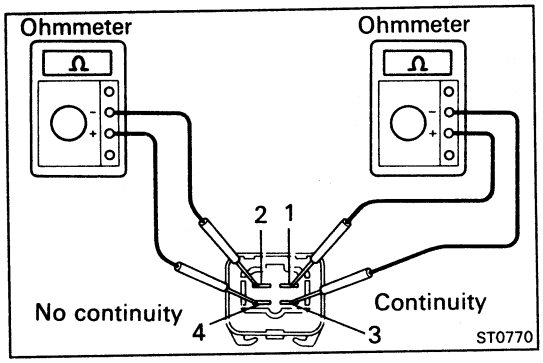

1. INSPECT RELAY CONTINUITY

(a) Using an ohmmeter, check that there is continuity between terminals 1 and 3.

(b) Check that there is no continuity between terminals 2 and 4.

If continuity is not as specified, replace the relay.

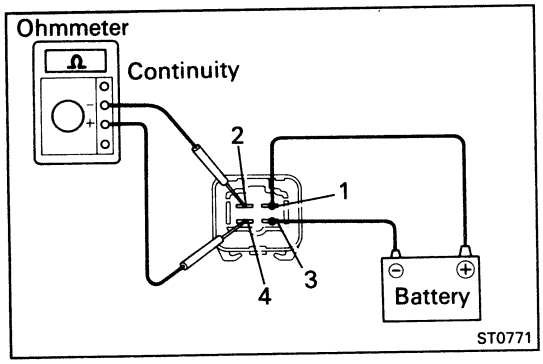

2. INSPECT RELAY OPERATION

(a) Apply battery voltage across terminals 1 and 3.

(b) Using an ohmmeter, check that there is continuity between terminals 2 and 4.

If operation is not as specified, replace the relay.

CLUTCH START SWITCH (M/T only)

(See page CL-4)

CHARGING SYSTEM

	Page
PRECAUTIONS	CH-2
TROUBLESHOOTING	CH-2
ON-VEHICLE INSPECTION	CH-3
ALTERNATOR	CH-6
IGNITION MAIN RELAY	CH-18

PRECAUTIONS

1. **Check that the battery cables are connected to the correct terminals.**
2. **Disconnect the battery cables when the battery is given a quick charge.**
3. **Do not perform tests with a high voltage insulation resistance tester.**
4. **Never disconnect the battery when the engine is running.**

TROUBLESHOOTING

Problem	Possible cause	Remedy	Page
Discharge warning light does not light with ignition ON and engine not	Fuse blown Light burned out Wiring connections loose Ignition main relay IC regulator faulty	Check "AM2" fuse Replace light Tighten loose connections Check relay Replace IC regulator	 CH-8
Discharge warning light does not go out with engine running battery requires frequent recharging	Drive belt loose or worn Battery cables loose, corroded or worm Fuse blown Fusible link blown IC regulator or alternator faulty Wiring faulty	Adjust or replace drive belt Repair or replace cables Check "ECU-IG" fuse Replace fusible link Check charging system Repair wiring	CH-3 CH-4

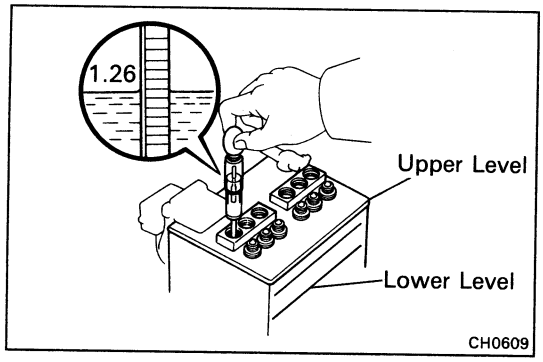

ON-VEHICLE INSPECTION

1. INSPECT BATTERY SPECIFIC GRAVITY AND ELECTROLYTE LEVEL

(a) Check the specific gravity of each cell.

Standard specific gravity:
1.25 – 1.27 when fully charged at 20°C(68°F)

If not within specification, charge the battery.

(b) Check the electrolyte quantity of each cell.

If insufficient, refill with distilled (or purified) water.

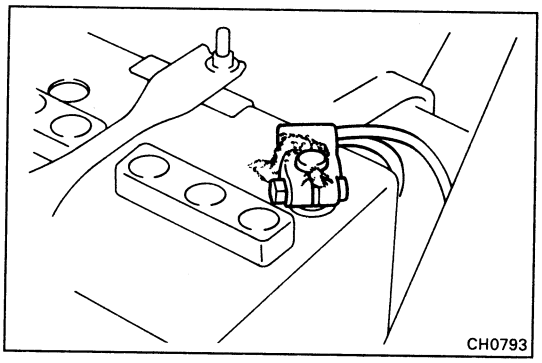

2. CHECK BATTERY TERMINALS, FUSIBLE LINKS AND FUSES

(a) Check that the battery terminals are not loose or corroded.

(b) Check the fusible links and fuses for continuity.

Fusible link:	**MAIN**	**2.0L**
	ALT	**120A**
	AM1	**50A**
	AM2	**40A**
Fuse:	**ECU-IG**	**15A**
	ALT SENCING	**7.5A**
	AM2	**7.5A**

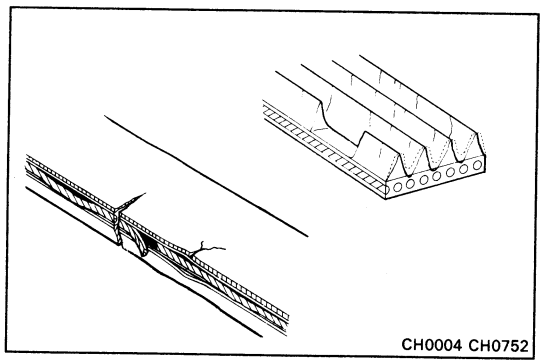

3. INSPECT ALTERNATOR DRIVE BELT

(a) Visually check the drive belt for excessive wear. frayed cirds etc.

If necessary, replace the drive belt.

HINT: Cracks on rib side of a drive belt are considered acceptable. If the drive belt has chunks missing from the ribs, it should be replaced.

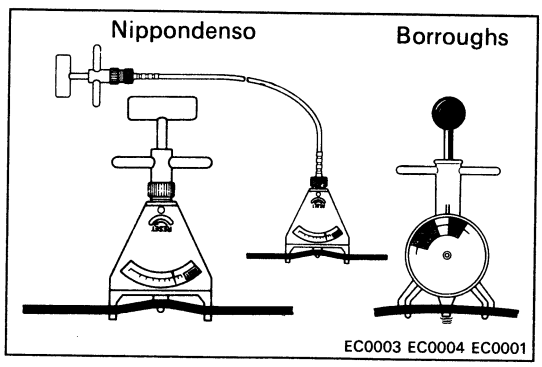

(b) Using a belt tension gauge, measure the drive belt tension.

Belt tension gauge:

Nippondenso	BTG-20 (95506-00020)
Borroughs	No. BT-33-73F

Drive belt tension:	**New belt**	**120 ± 20 lb**
	Used belt	**104 ± 20 lb**

If the belt tension is not as specified, adjust it.

HINT:

- "New belt" refer to a belt which has been used 5 minutes or less on a running engine.
- "Used belt" refers to a belt which has been used on a running engine for 5 minutes or more.
- After installing a belt, check that it fits properly in the ribbed grooves.
- Check by hand to confirm that the belt has not slipped out of the groove on the bottom of the pulley.
- After installing a new belt, run the engine for about 5 minutes and recheck the belt tension.

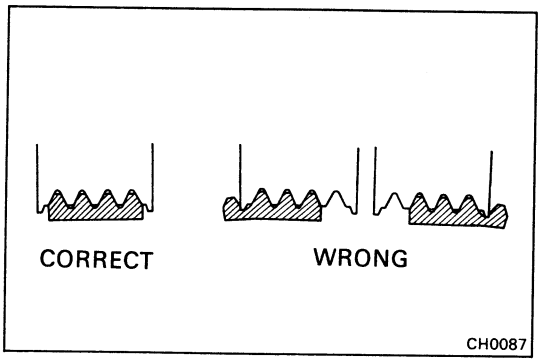

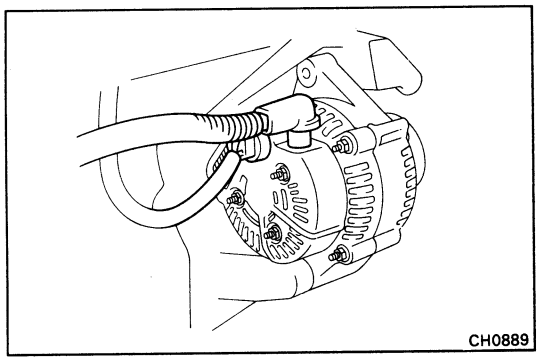

4. VISUALLY CHECK ALTERNATOR WIRING AND LISTEN FOR ABNORMAL NOISES

(a) Check that the wiring is in good condition.

(b) Check that there is no abnormal noise from the alternator while the engine is running.

5. INSPECT CHARGE WARNING LIGHT CIRCUIT

(a) Warm up the engine and then turn it off.

(b) Turn off all accessories.

(c) Turn the ignition switch to "ON". Check that the charge warning light is lit.

(d) Start the engine. Check that the light goes out.

If the light does not go off as specified, troubleshoot the charge light circuit.

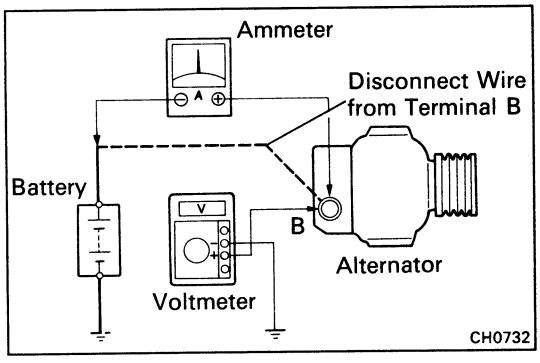

6. INSPECT CHARGING CIRCUIT WITHOUT LOAD

HINT: If a battery/alternator tester is available, connect the tester to the charging circuit as per manufacturer's instructions.

(a) If a tester is not available, connect a voltmeter and ammeter to the charging circuit as follows:

- Disconnect the wire from terminal B of the alternator and connect it to the negative (–) probe of the ammeter.
- Connect the positive (+) probe of the ammeter to terminal B of the alternator.
- Connect the positive (+) probe of the voltmeter to terminal B of the alternator.
- Ground the negative (–) probe of the voltmeter.

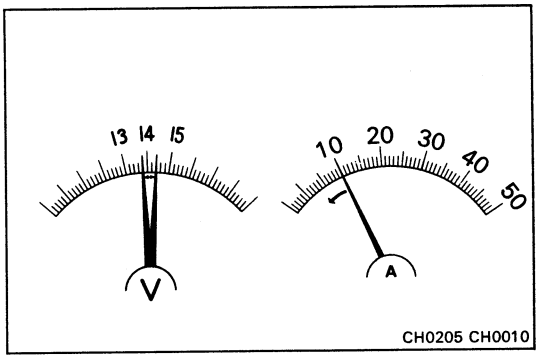

(b) Check the charging circuit as follows:

With the engine running from idling to 2,000 rpm, check the reading on the ammeter and voltmeter.

Standard amperage: **10 A or less**

Standard voltage: **13.9 – 15.1 V at 25°C (77°F)**
13.5 – 14.3 V at 115°C (239°F)

If the voltmeter reading is greater than standard voltage, replace the IC regulator.

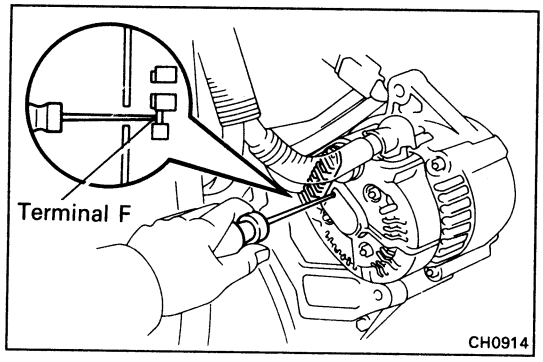

If the voltmeter reading is less than standard voltage, check the IC regulator and alternator as follows:

- With terminal F grounded, start the engine and check the voltmeter reading of terminal B.

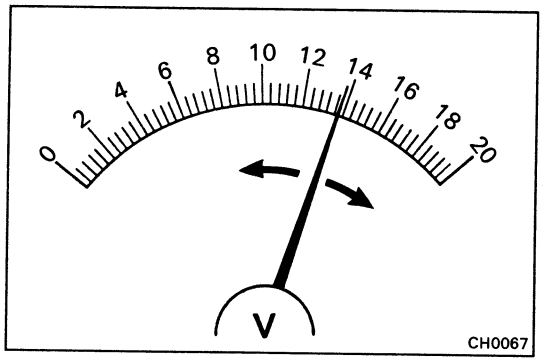

- If the voltmeter reading is greater than standard voltage, replace the IC regulator.
- If the voltmeter reading is less than standard voltage, check the alternator.

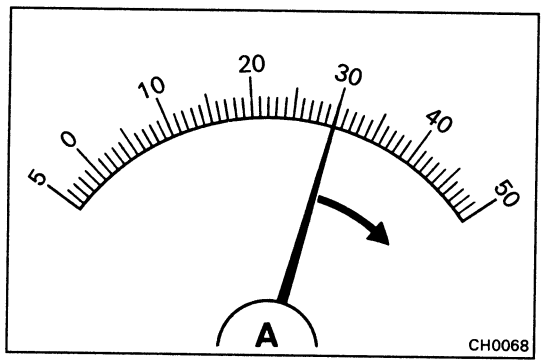

7. INSPECT CHARGING CIRCUIT WITH LOAD

(a) With the engine running at 2,000 rpm, turn on the high beam headlights and place the heater blower switch at "HI".

(b) Check the reading on the ammeter.

Standard amperage: 30 A or more

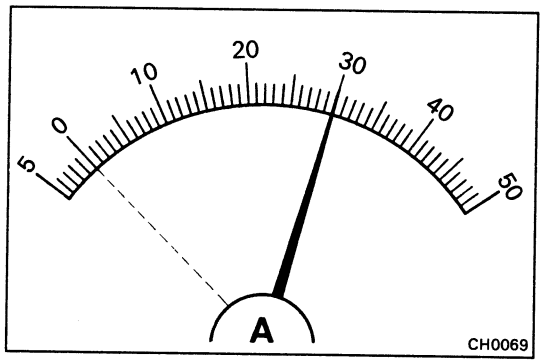

If the ammeter reading is less than standard amperage, repair the alternator. (See page CH-8)

HINT: With the battery fully charged, the indication will sometimes be less than standard amperage.

ALTERNATOR

REMOVAL OF ALTERNATOR

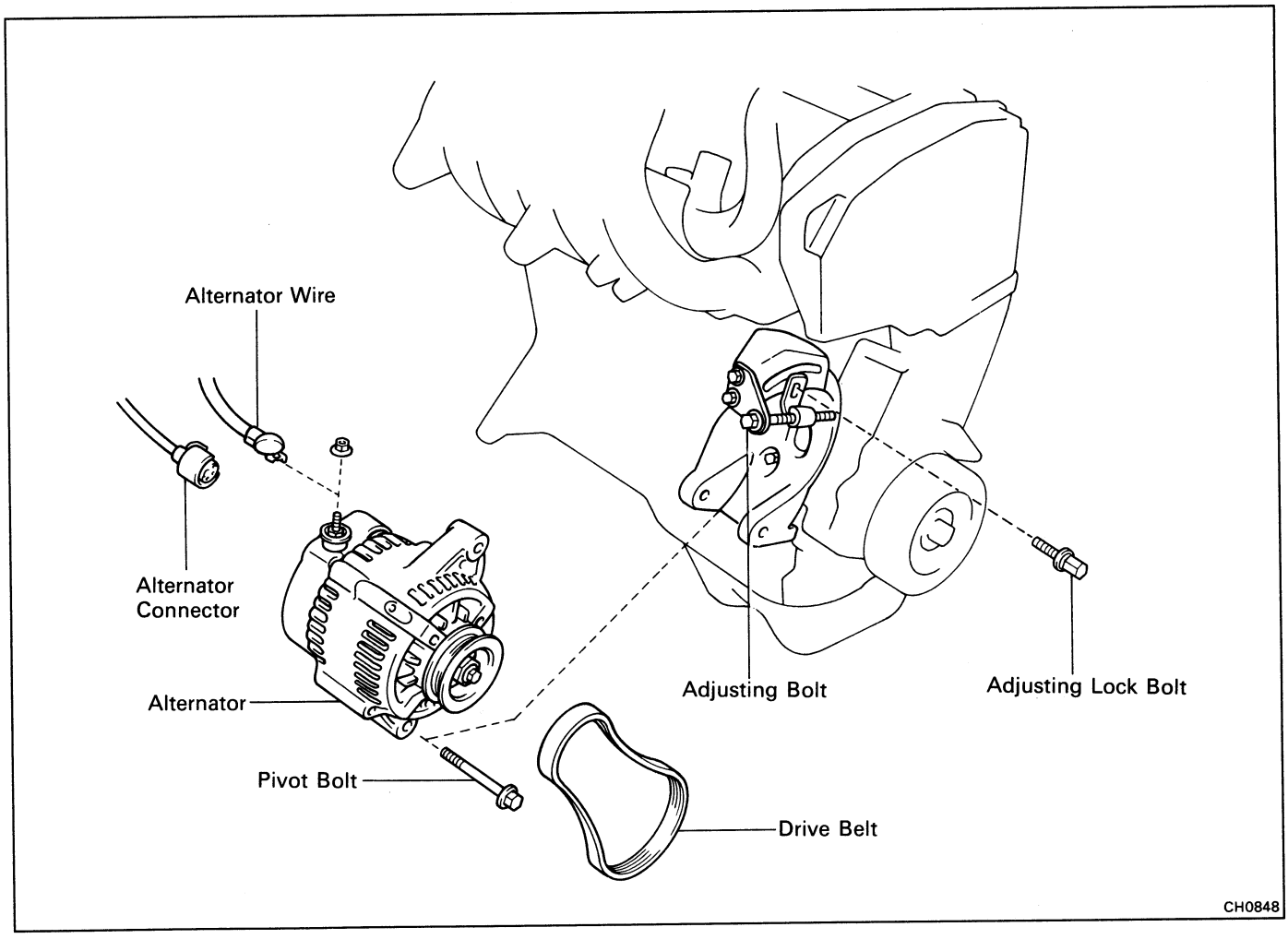

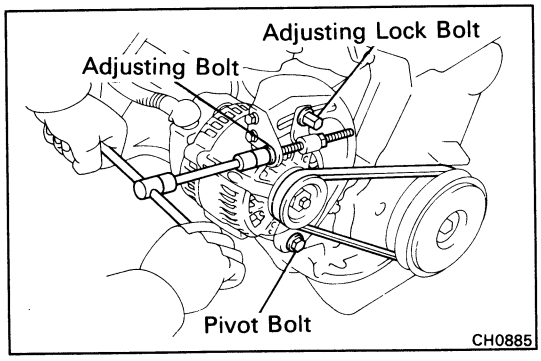

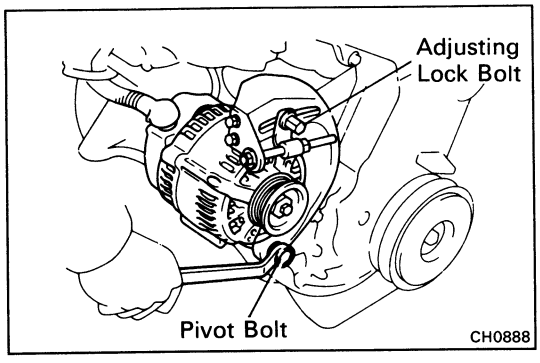

1. **DISCONNECT CABLE FROM NEGATIVE TERMINAL OF BATTERY**

   CAUTION: Work must be started after approx. 20 seconds or longer from the time the ignition switch is turned to the "LOCK" position and the negative (–) terminal cable is disconnected from the battery.

2. **REMOVE DRIVE BELT**
   (a) Loosen the pivot bolt and adjusting lock bolt.
   (b) Loosen the adjusting bolt, and disconnect the drive belt from the alternator.

3. **REMOVE ALTERNATOR**
   (a) Disconnect the alternator connector.
   (b) Remove the nut, and disconnect the alternator wire.
   (c) Remove the pivot bolt, adjusting lock bolt and alternator.

COMPONENTS

70 A Type

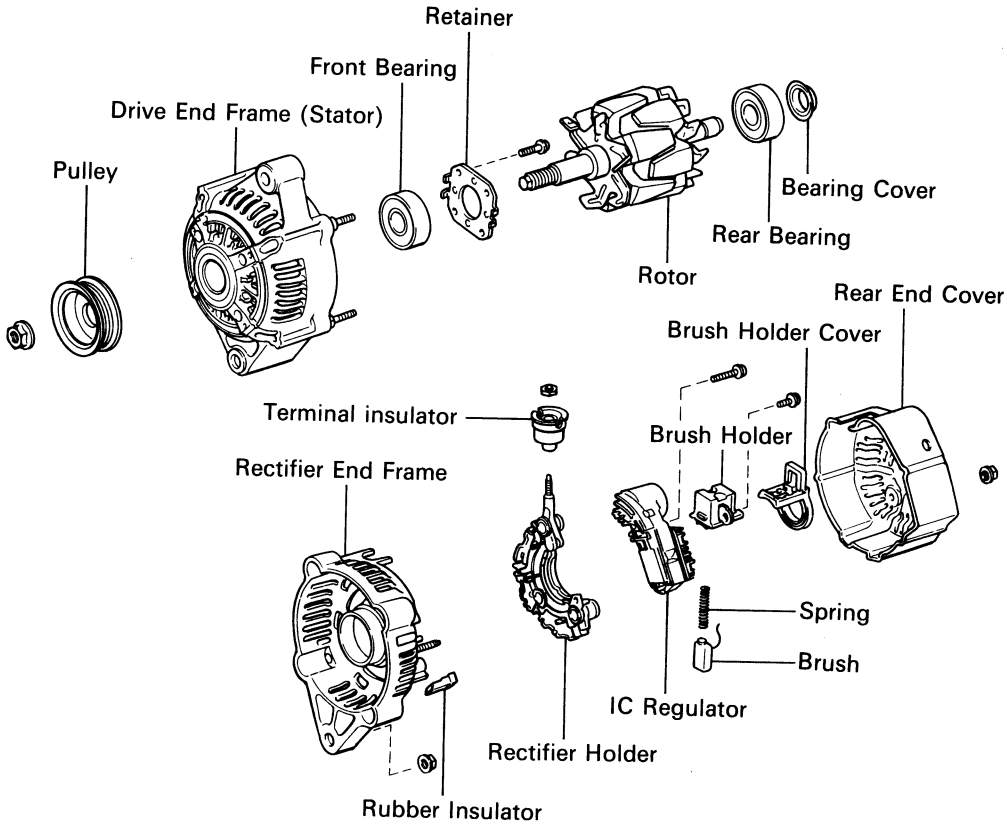

80 A and 100 A Types

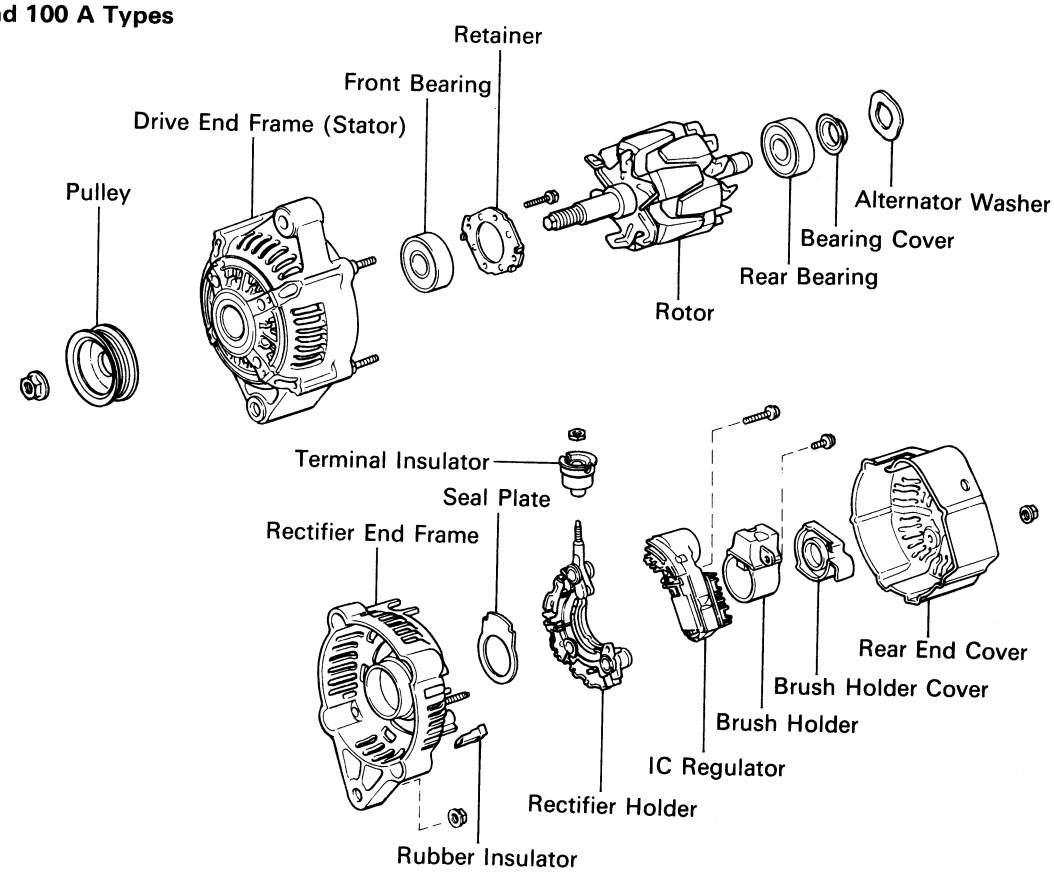

CH0922
CH0921

DISASSEMBLY OF ALTERNATOR

(See page CH-7)

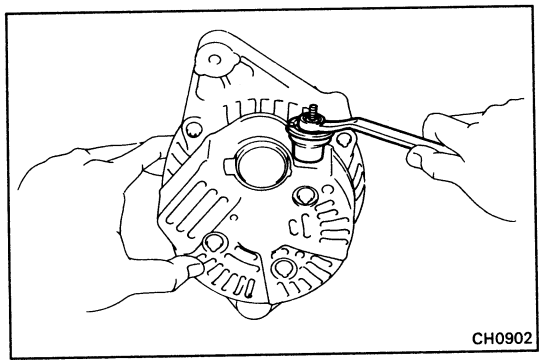

1. REMOVE REAR END COVER

(a) Remove the nut and terminal insulator.

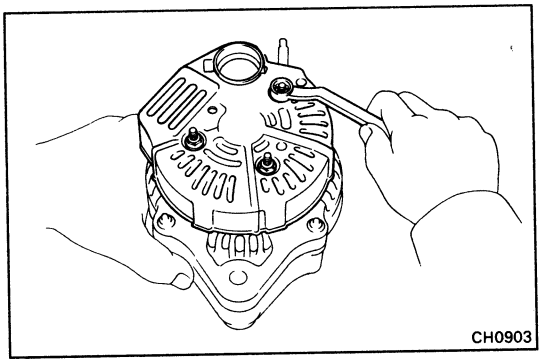

(b) Remove the three nuts and end cover.

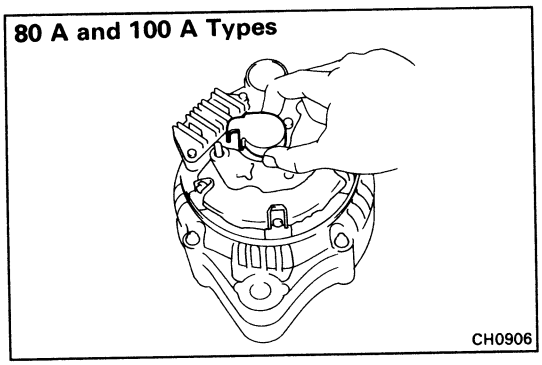

2. REMOVE BRUSH HOLDER AND IC REGULATOR

(a) (80 A and 100 A Types)
Remove the brush holder cover from the brush holder.

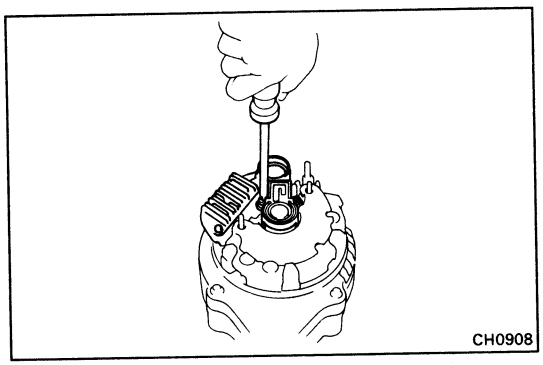

(b) Remove the five screws, brush holder and IC regulator.

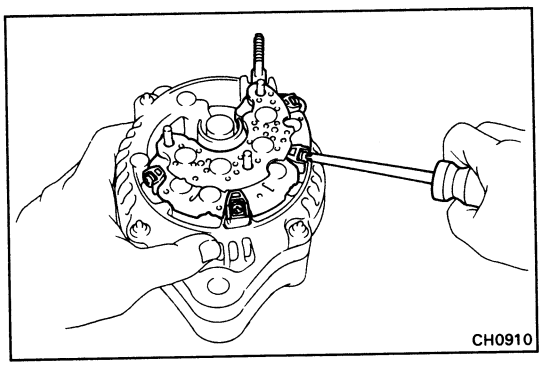

3. REMOVE RECTIFIER HOLDER

(a) Remove the four screws and rectifier holder.

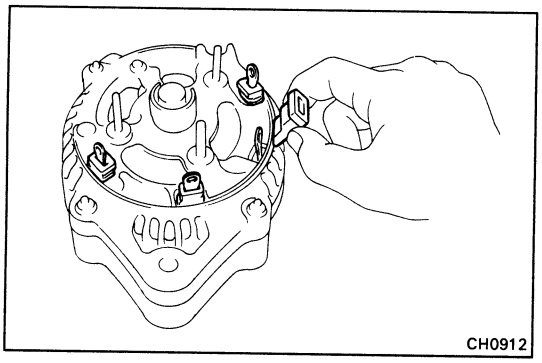

(b) Remove the four rubber insulators.

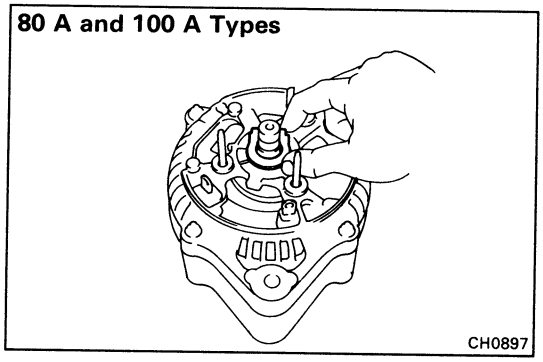

(c) (80 A and 100 A Types)
Remove the seal plate.

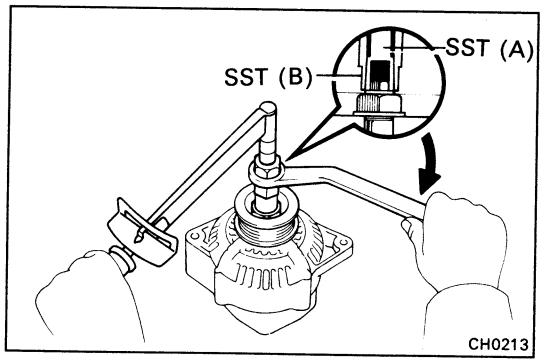

4. REMOVE PULLEY

(a) Hold SST (A) with a torque wrench, and tighten SST (B) clockwise to the specified torque.

SST 09820-63010

Torque: 400 kg-cm (29 ft-lb, 39 N·m)

(b) Check that SST (A) is secured to the rotor shaft.

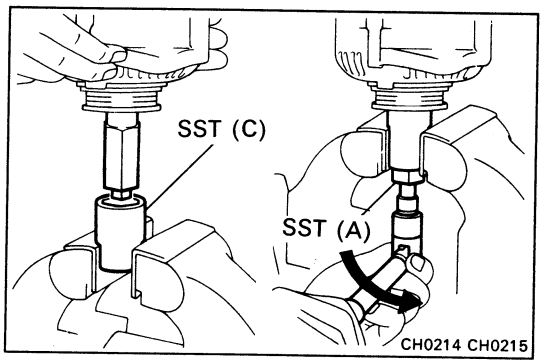

(c) As shown in the figure, mount SST (C) in a vise, and install the alternator to SST (C).

(d) To loosen the pulley nut turn SST (A) in the direction shown in the figure.

NOTICE: To prevent damage to the rotor shaft, do not loosen the pulley nut more than one-half of a turn.

(e) Remove the alternator from SST (C).

(f) Turn SST (B) and remove SST (A and B).

(g) Remove the pulley nut and pulley.

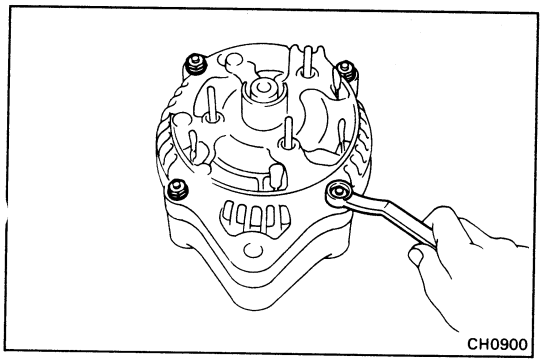

5. REMOVE RECTIFIER END FRAME

(a) Remove the four nuts.

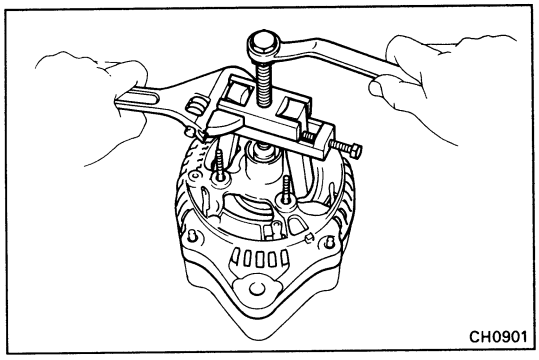

(b) Using SST, remove the rectifier end frame.
SST 09286-46011

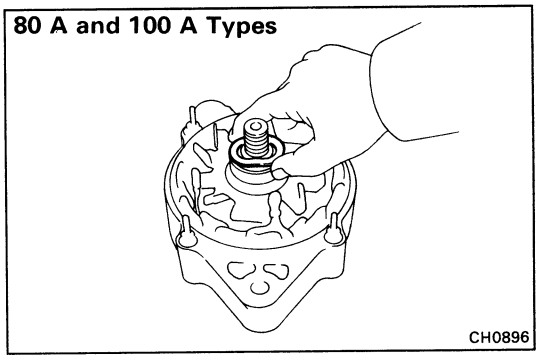

(c) (80 A and 100 A Types)
Remove the alternator washer.

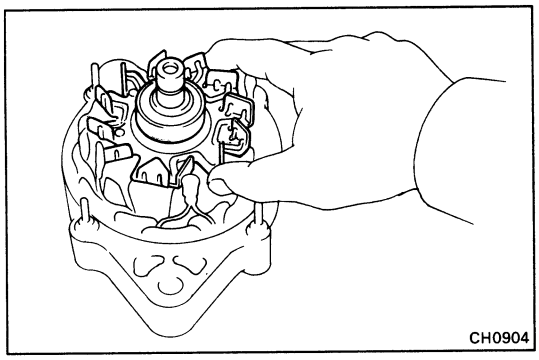

6. REMOVE ROTOR FROM DRIVE END FRAME

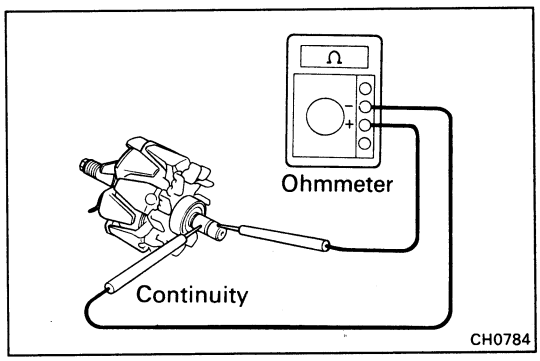

INSPECTION AND REPAIR OF ALTERNATOR

Rotor

1. INSPECT ROTOR FOR OPEN CIRCUIT

Using an ohmmeter, check that there is continuity between the slip rings.

Standard resistance (Cold): 2.8 – 3.0 Ω

If there is no continuity, replace the rotor.

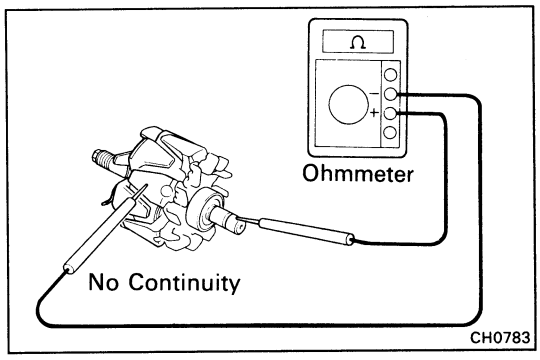

2. INSPECT ROTOR FOR GROUND

Using an ohmmeter, check that there is no continuity between the slip ring and rotor.

If there is continuity, replace the rotor.

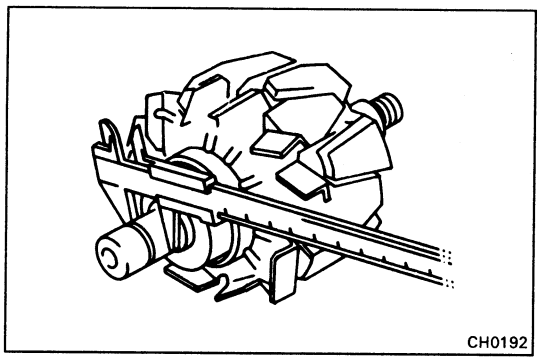

3. INSPECT SLIP RINGS

(a) Check that the slip rings are not rough or scored.

If rough or scored, replace the rotor.

(b) Using vernier calipers, measure the slip ring diameter.

Standard diameter: 14.2 – 14.4 mm (0.559 – 0.567 in.)

Minimum diameter: 12.8 mm (0.504 in.)

If the diameter is less than minimum, replace the rotor.

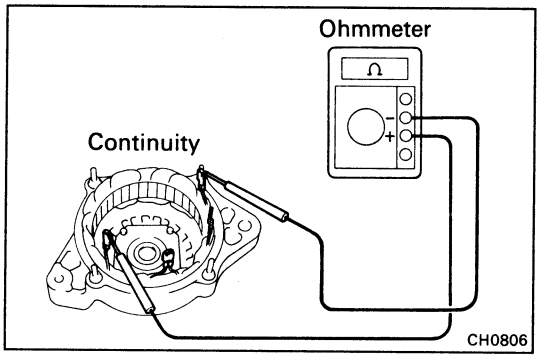

Stator (Drive End Frame)

1. INSPECT STATOR FOR OPEN CIRCUIT

Using an ohmmeter, check that there is continuity between the coil leads.

If there is no continuity, replace the drive end frame assembly.

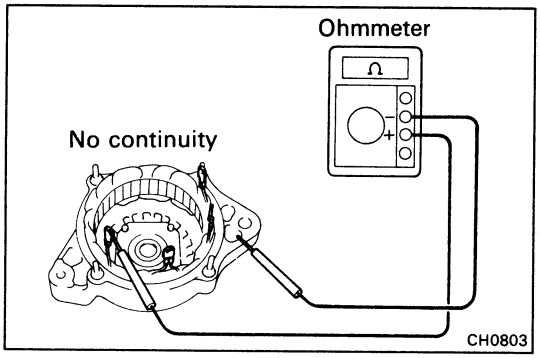

2. INSPECT STATOR FOR GROUND

Using an ohmmeter, check that there is no continuity between the coil lead and drive end frame.

If there is continuity, replace the drive end frame assembly.

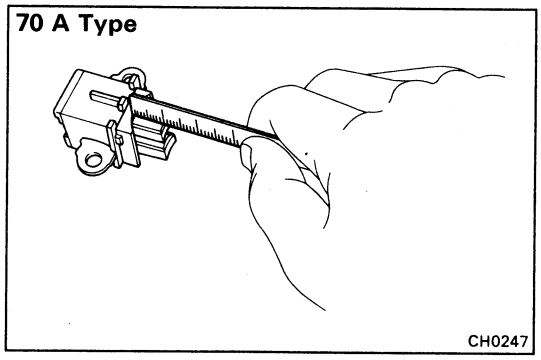

Brushes

1. INSPECT EXPOSED BRUSH LENGTH

Using scale or vernier calipers, measure the exposed brush length.

Standard exposed length: 10.5 mm (0.413 in.)

Minimum exposed length: 1.5 mm (0.059 in.)

If the exposed length is less than minimum, replace the brushes (70 A type) or brushes and brush holder assembly (80 A and 100 A types).

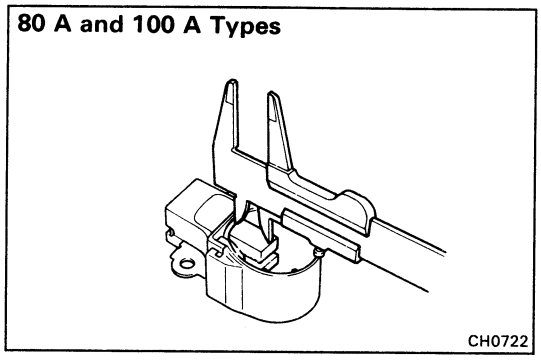

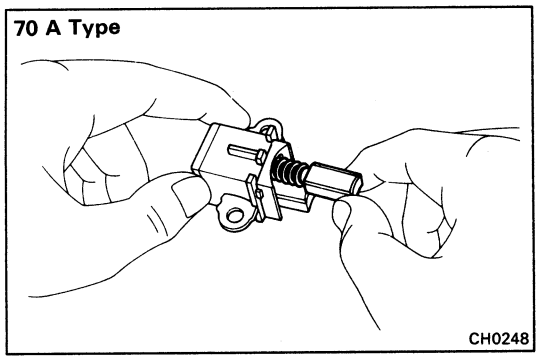

2. **(70 A TYPE)**
IF NECESSARY, REPLACE BRUSHES

(a) Unsolder and remove the brush and spring.

(b) Run the wire of a new brush through the hole in the brush holder, and insert the spring and brush into the brush holder.

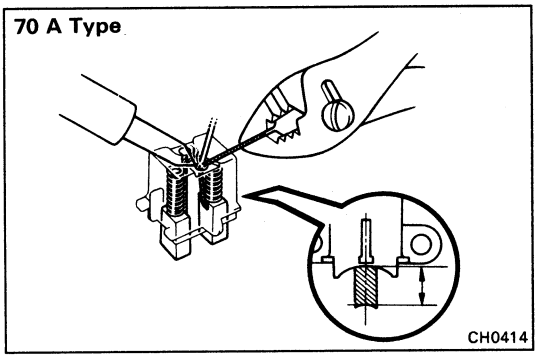

(c) Solder the brush wire to the brush holder at specified exposed length.

Exposed length: 10.5 mm (0.413 in.)

(d) Check that the brush moves smoothly in the brush holder.

(e) Cut off the excess wire.

(f) Apply insulation paint to the soldered point.

Rectifiers (Rectifier Holder)

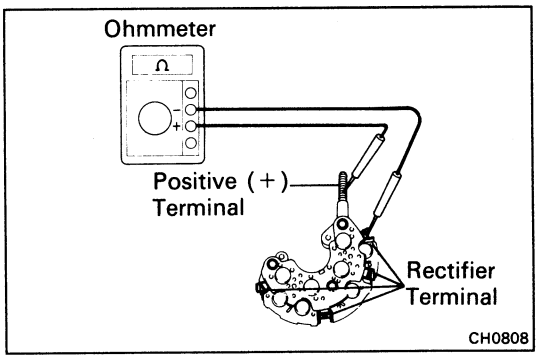

1. **INSPECT POSITIVE RECTIFIER**

(a) Using an ohmmeter, connect one test probe to the positive (+) terminal and the other to each rectifier terminal.

(b) Reverse the polarity of the tester and repeat (a).

(c) Check that one shows continuity and the other shows no continuity.

If continuity is not as specified, replace the rectifier holder.

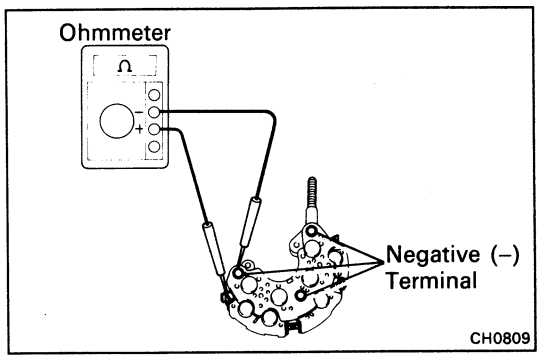

2. **INSPECT NEGATIVE RECTIFIER**

(a) Using an ohmmeter, connect one test probe to each negative (–) terminal and the other to each rectifier terminal.

(b) Reverse the polarity of the tester probes and repeat (a).

(c) Check that one shows continuity and the other shows no continuity.

If continuity is not as specified, replace the rectifier holder.

Bearings

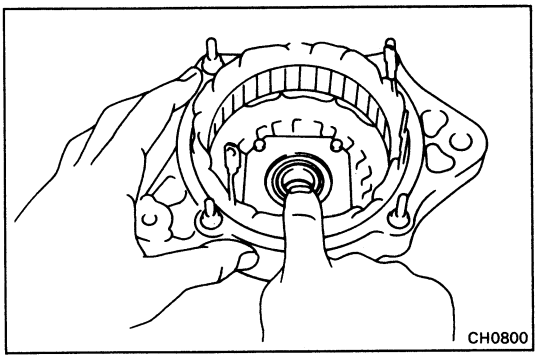

1. **INSPECT FRONT BEARING**

Check that the bearing is not rough or worn.

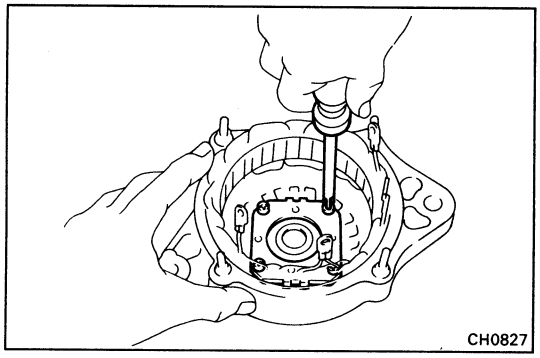

2. IF NECESSARY, REPLACE FRONT BEARING

(a) Remove the four screws, bearing retainer and bearing.

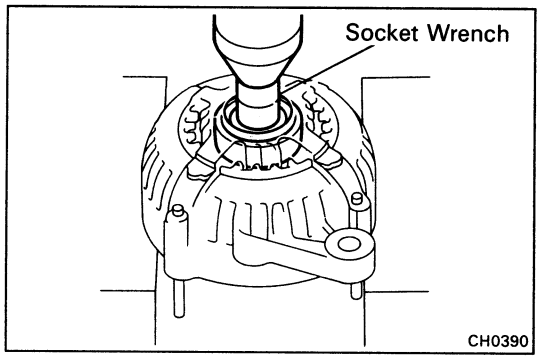

(b) Using socket wrench and press, press out the bearing.

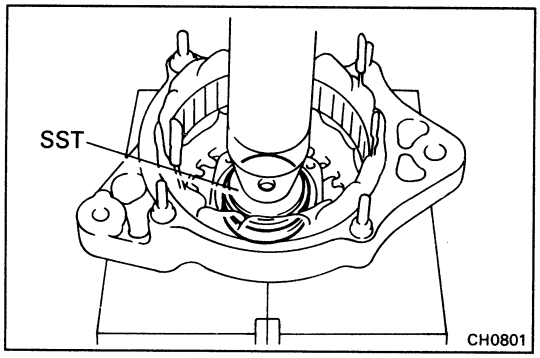

(c) Using SST and a press, press in a new bearing.

SST 09608-20012 (09608-00030)

(d) Install the bearing retainer with the four screws.

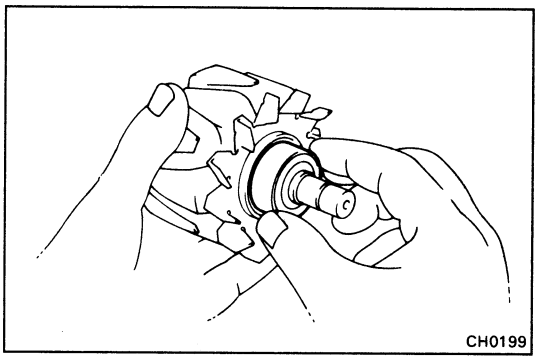

3. INSPECT REAR BEARING

Check that the bearing is not rough or worn.

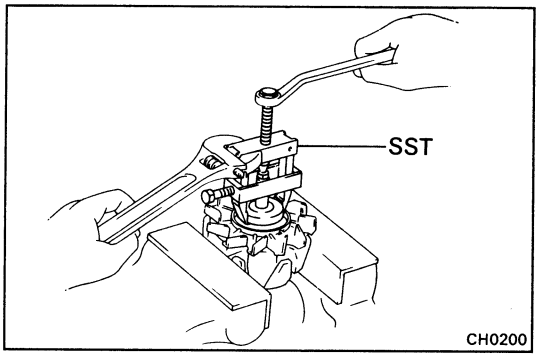

4. IF NECESSARY, REPLACE REAR BEARING

(a) Using SST, remove the bearing cover and bearing.

SST 09820-00021

NOTICE: Be careful not to damage the fan.

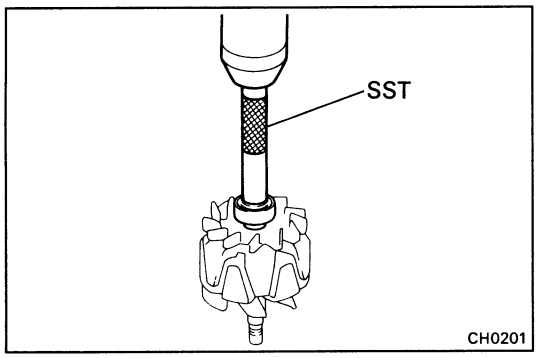

(b) Using SST and a press, press in a new bearing and bearing cover.

SST 09285-76010

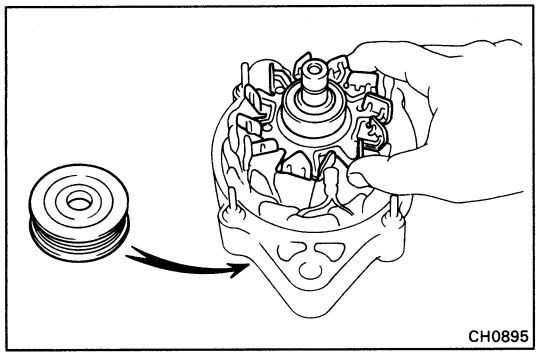

ASSEMBLY OF ALTERNATOR

(See page CH-7)

1. INSTALL ROTOR TO RECTIFIER END FRAME

(a) Place the retifier end frame on the pulley.

(b) Install the rotor to the retifier end frame.

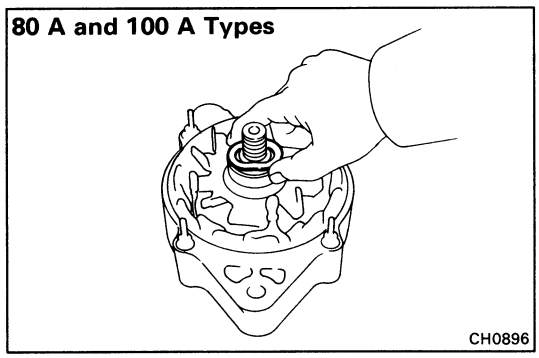

2. INSTALL RECTIFIER END FRAME

(a) (80 A and 100 A Types)
Place the alternator washer on the rotor.

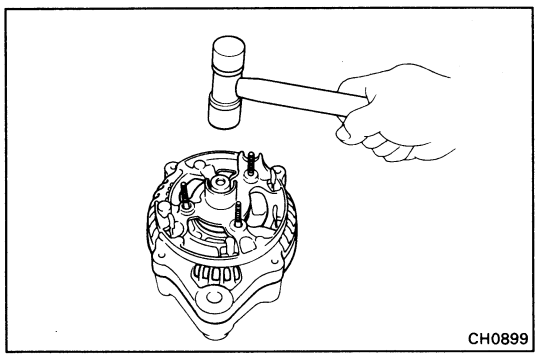

(b) Using a plastic-faced hammer, lightly tap in the rectifier end frame.

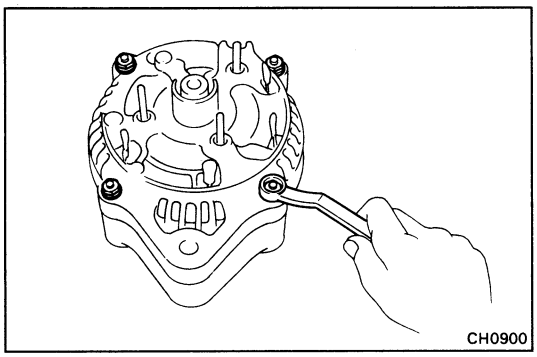

(c) Install the four nuts.

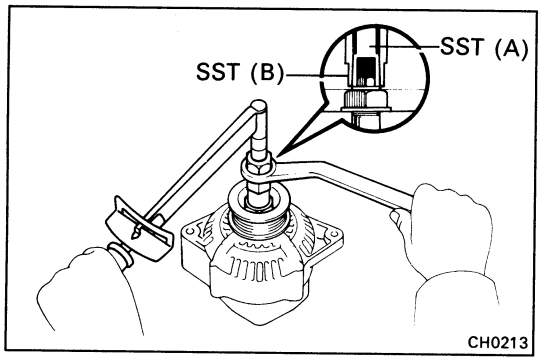

3. INSTALL PULLEY

(a) Install the pulley to the rotor shaft by tightening the pulley nut by hand.

(b) Hold SST (A) with a torque wrench, and tighten SST (B) clockwise to the specified torque.

SST 09820-63010

Torque: 400 kg-cm (29 ft-lb, 39 N·m)

(c) Check that SST (A) is secured to the pulley shaft.

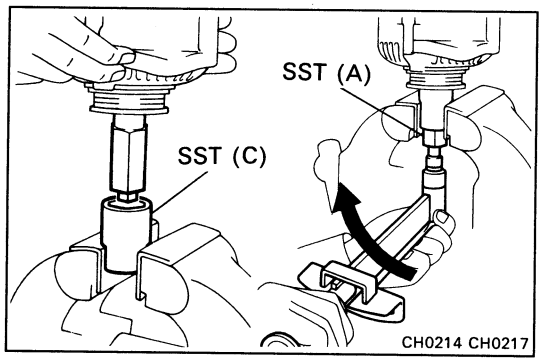

(d) As shown in the figure, mount SST (C) in a vise, and install the alternator to SST (C).

(e) To torque the pulley nut turn SST (A) in the direction shown in the figure.

Torque: 1,125 kg-cm (81 ft-lb, 110 N·m)

(f) Remove the alternator from SST (C).

(g) Turn SST (B) and remove SST (A and B).

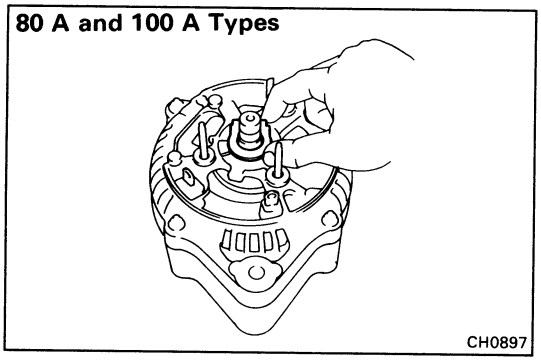

4. INSTALL RECTIFIER HOLDER

(a) (80 A and 100 A Types)
Place the seal plate on the rotor end frame.

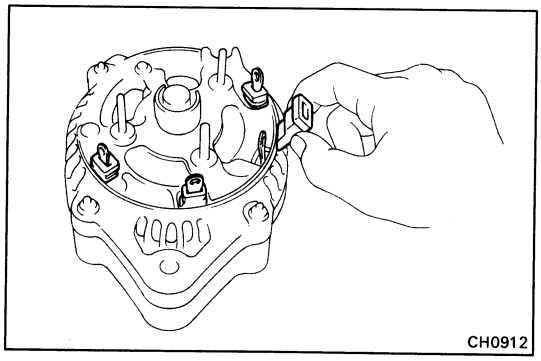

(b) Install the four rubber insulators on the lead wires.

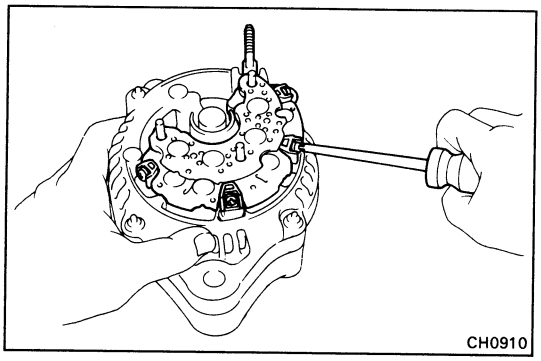

(c) Install the rectifier holder with the four screws.

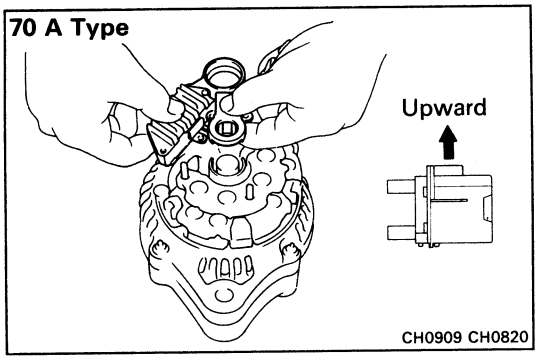

5. **INSTALL IC REGULATOR AND BRUSH HOLDER**

(70 A Type)

(a) Install the brush holder cover to the brush holder.

NOTICE: Be careful about the holder installation direction.

(b) Place the IC regulator together with the brush holder horizontally on the rectifier end frame.

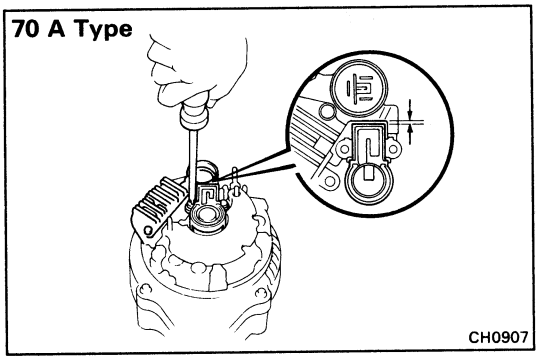

(c) Install the five screws until there is a clearance of approx. 1 mm (0.04 in.) between the brush holder and connector.

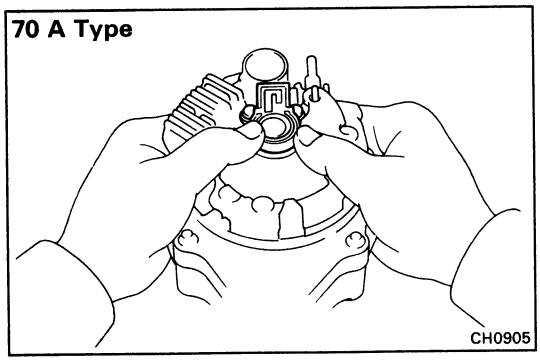

(d) Fit the brush holder cover.

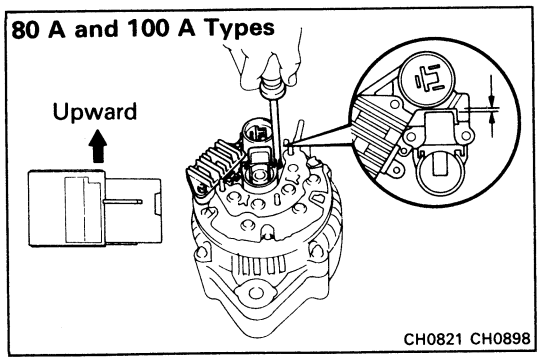

(80 A and 100 A Types)

(a) Place the IC regulator together and brush holder on the rectifier end frame.

NOTICE: Be careful about the holder installation direction.

(b) Install the five screws until there is a clearance of approx. 1 mm (0.04 in.) between the brush holder and connector.

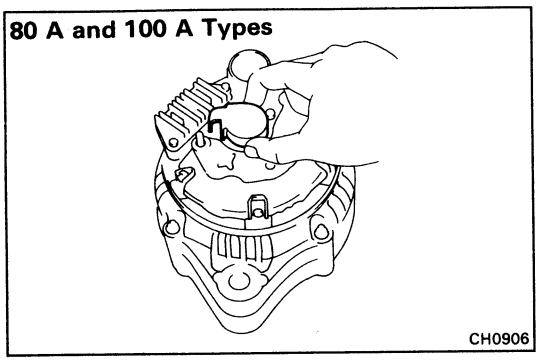

(c) Place the brush holder cover on the brush holder.

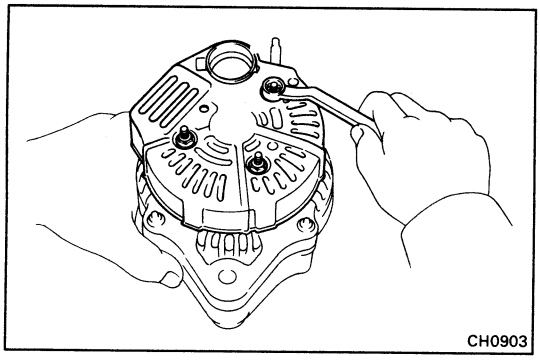

6. INSTALL REAR END COVER

(a) Install the end cover with the three nuts.

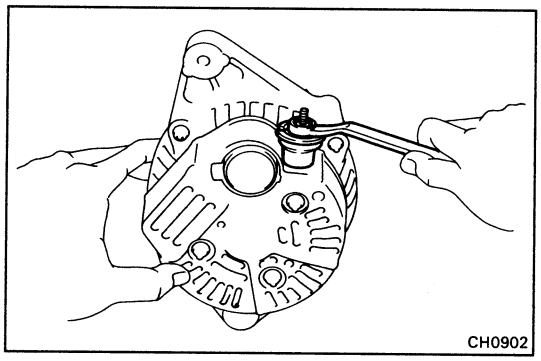

(b) Install the terminal insulator with the nut.

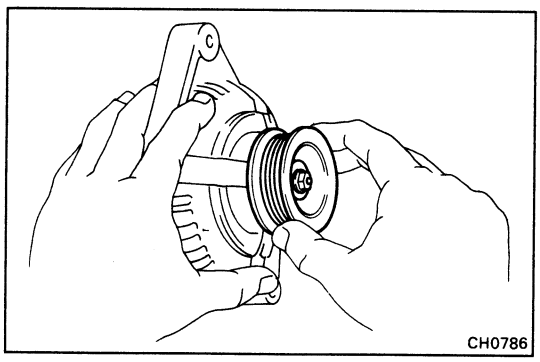

7. CHECK THAT ROTOR ROTATES SMOOTHLY

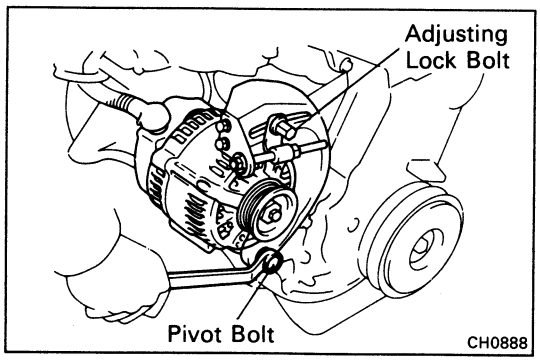

INSTALLATION OF ALTERNATOR

1. INSTALL ALTERNATOR

(a) Mount the alternator on the alternator brackets with the pivot bolt and adjusting lock bolt. Do not tighten the bolts yet.

(b) Connect the alternator connector.

(c) Connect the alternator wire with the nut.

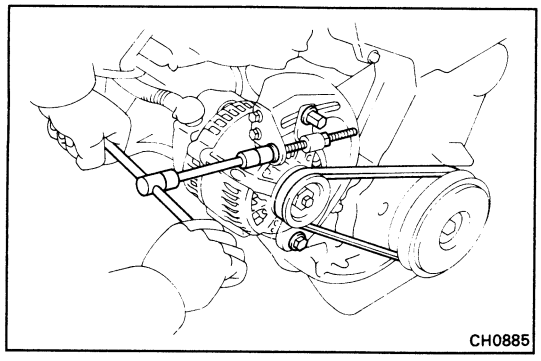

2. INSTALL DRIVE BELT

Adjust the drive belt tension.
(See step 3 on page CH-3)

Drive belt tension: **New belt** **120 ± 20 lb**
Used belt **104 ± 20 lb**

3. CONNECT CABLE TO NEGATIVE TERMINAL OF BATTERY

4. PERFORM ON-VEHICLE INSPECTION
(See steps 5 to 7 on pages CH-4 and 5)

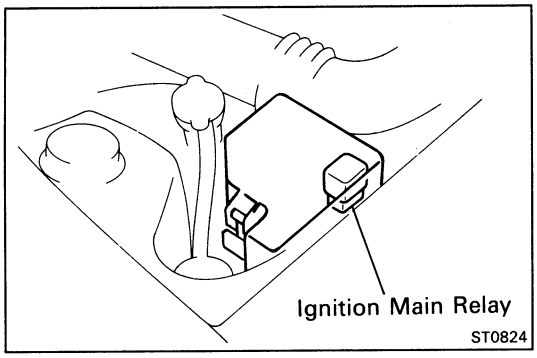

IGNITION MAIN RELAY "IGN"

INSPECTION OF IGNITION MAIN RELAY

LOCATION: In the engine compartment relay box.

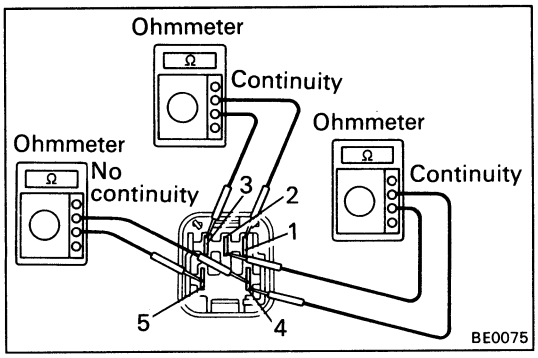

1. INSPECT RELAY CONTINUITY

(a) Using an ohmmeter, check that there is continuity between terminals 1 and 3.

(b) Check that there is continuity between terminals 2 and 4.

(c) Check that there is no continuity between terminals 4 and 5.

If continuity is not as specified, replace the relay.

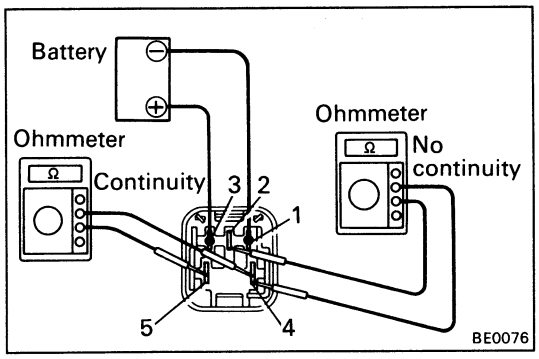

2. INSPECT RELAY OPERATION

(a) Apply battery voltage across terminals 1 and 3.

(b) Using an ohmmeter, check that there is no continuity between terminals 2 and 4.

(c) Check that there is continuity between terminals 4 and 5.

If operation is not as specified, replace the relay.

SERVICE SPECIFICATIONS

	Page
MAINTENANCE	A-2
ENGINE MECHANICAL (3S-GTE)	A-3
ENGINE MECHANICAL (5S-FE)	A-7
EXHAUST SYSTEM	A-11
TURBOCHARGER SYSTEM	A-11
EFI SYSTEM (3S-GTE)	A-12
EFI SYSTEM (5S-FE)	A-15
COOLING SYSTEM	A-18
LUBRICATION SYSTEM	A-19
IGNITION SYSTEM	A-20
STARTING SYSTEM	A-20
CHARGING SYSTEM	A-20
LUBRICANT	A-21

MAINTENANCE

Engine

Drive belt tension					
Alternator		New belt	120 ± 20 lb		
		Used belt	104 ± 20 lb		
A/C compressor		New belt	160 ± 25 lb		
		Used belt	100 ± 20 lb		
Engine coolant capacity (w/ Heater)		3S-GTE	13.6 liters	14.4 US qts	12.0 Imp. qts
		5S-FE	13.0 liters	13.7 US qts	11.4 Imp. qts
Engine oil capacity (Drain and refill)					
3S-GTE	w/ Oil filter change		3.9 liters	4.1 US qts	3.4 Imp. qts
	w/o Oil filter change		3.6 liters	3.8 US qts	3.2 Imp. qts
5S-FE	w/ Oil filter change		4.2 liters	4.4 US qts	3.7 Imp. qts
	w/o Oil filter change		3.8 liters	4.0 US qts	3.3 Imp. qts
Spark plug					
Type	3S-GTE	ND	PK20R8		
		NGK	BKR6EP8		
	5S-FE	ND	K16R-U11		
		NGK	BKR5EYA11		
Gap	3S-GTE		0.8 mm		0.031 in.
	5S-FE		1.1 mm		0.043 in.
Firing order			1 – 3 – 4 – 2		
Valve clearance	3S-GTE	Intake	0.15 – 0.25 mm		0.006 – 0.010 in.
		Exhaust	0.20 – 0.30 mm		0.008 – 0.012 in.
	5S-FE	Intake	0.19 – 0.29 mm		0.007 – 0.011 in.
		Exhaust	0.28 – 0.38 mm		0.011 – 0.015 in.

Chassis

Front and rear brakes					
Pad thickness		Limit	1.0 mm		0.039 in.
Disc thickness	Limit	Front	24.0 mm		0.787 in.
		Rear	15.0 mm		0.590 in.
Disc runout	Limit	Front	0.07 mm		0.0028 in.
		Rear	0.10 mm		0.0039 in.
Front axle and suspension					
Ball joint vertical play		Limit	0 mm		0 in.
Steering wheel play			30 mm		1.18 in.
Torque specifications					
Front seat mount bolts			375 kg-cm	27 ft-lb	37 N·m
Strut bar bracket-to-body mount bolts			740 kg-cm	54 ft-lb	73 N·m
Rear suspension lower crossmember-to-body mount bolts			1,150 kg-cm	83 ft-lb	113 N·m

ENGINE MECHANICAL (3S-GTE)

Specifications

Idle speed				800 ± 50 rpm	
Intake manifold vacuum	at Idle speed			450 mmHg	17.7 in.Hg 60 kPa
Compression	at 250 rpm		STD	11.5 kg/cm² (164 psi, 1,128 kPa) or more	
			Limit	9.0 kg/cm²	128 psi 883 kPa
	Difference of pressure between each cylinder			1.0 kg/cm² (14 psi, 98 kPa) or less	
Timing belt tensioner	Protrusion			8.5 – 9.5 mm	0.335 – 0.374 in.
Cylinder head	Warpage	Cylinder block side	Limit	0.20 mm	0.0079 in.
		Intake manifold side	Limit	0.20 mm	0.0079 in.
		Exhaust manifold side	Limit	0.30 mm	0.0118 in.
	Valve seat	Refacing angle		30°, 45°, 75°	
		Contacting angle		45°	
		Contacting width		1.0 – 1.4 mm	0.039 – 0.055 in.
Valve guide bushing	Inside diameter			6.000 – 6.018 mm	0.2362 – 0.2369 in.
	Outside diameter (for repair part)		STD	11.030 – 11.041 mm	0.4343 – 0.4347 in.
			O/S 0.05	11.080 – 11.091 mm	0.4362 – 0.4367 in.
Valve	Valve overall length	STD	Intake	105.50 mm	4.1535 in.
			Exhaust	99.55 mm	3.9193 in.
		Limit	Intake	104.80 mm	4.1260 in.
			Exhaust	98.85 mm	3.8917 in.
	Valve face angle			44.5°	
	Stem diameter		Intake	5.960 – 5.975 mm	0.2346 – 0.2352 in.
			Exhaust	5.955 – 5.970 mm	0.2344 – 0.2350 in.
	Stem oil clearance	STD	Intake	0.025 – 0.058 mm	0.0010 – 0.0023 in.
			Exhaust	0.030 – 0.063 mm	0.0012 – 0.0025 in.
		Limit	Intake	0.08 mm	0.0031 in.
			Exhaust	0.10 mm	0.0039 in.
	Margin thickness		STD	0.8 – 1.2 mm	0.031 – 0.047 in.
			Limit	0.5 mm	0.020 in.
Valve spring	Squareness		Limit	2.0 mm	0.079 in.
	Free length			44.43 mm	1.7492 in.
	Installed tension at 34.4 mm (1.354 in.)			20.5 – 24.1 kg (45.2 – 53.1 lb, 201 – 236 N)	
Valve lifter	Lifter diameter			27.975 – 27.985 mm	1.1014 – 1.1018 in.
	Lifter bore diameter			28.000 – 28.021 mm	1.1024 – 1.1032 in.
	Oil clearance		STD	0.015 – 0.046 mm	0.0006 – 0.0018 in.
			Limit	0.07 mm	0.0028 in.
Manifold	Warpage		Limit	0.20 mm	0.0079 in.

Specifications (Cont'd)

Camshaft	Thrust clearance		STD	0.120 – 0.240 mm	0.0047 – 0.0094 in.
			Limit	0.30 mm	0.0118 in.
	Journal oil clearance		STD	0.025 – 0.062 mm	0.0010 – 0.0024 in.
			Limit	0.08 mm	0.0031 in.
	Journal diameter			26.959 – 26.975 mm	1.0614 – 1.0620 in.
	Circle runout		Limit	0.06 mm	0.0024 in.
	Cam lobe height		STD	41.010 – 41.110 mm	1.6146 – 1.6185 in.
			Limit	39.90 mm	1.5709 in.
T-VIS valve	Warpage		Limit	0.20 mm	0.0079 in.
Cylinder block	Cylinder head surface warpage		Limit	0.05 mm	0.0020 in.
	Cylinder bore diameter	STD	Mark 1	86.000 – 86.010 mm	3.3858 – 3.3862 in.
			Mark 2	86.010 – 86.020 mm	3.3862 – 3.3866 in.
			Mark 3	86.020 – 86.030 mm	3.3866 – 3.3870 in.
			Limit	86.23 mm	3.3949 in.
Piston and piston ring	Piston diameter		Mark 1	85.920 – 85.930 mm	3.3827 – 3.3831 in.
			Mark 2	85.930 – 85.940 mm	3.3831 – 3.3835 in.
			Mark 3	85.940 – 85.950 mm	3.3835 – 3.3839 in.
	Piston oil clearance		STD	0.070 – 0.090 mm	0.0028 – 0.0035 in.
			Limit	0.110 mm	0.0043 in.
	Piston ring groove clearance		No.1	0.040 – 0.080 mm	0.0016 – 0.0031 in.
			No.2	0.030 – 0.070 mm	0.0012 – 0.0028 in.
	Piston ring end gap	STD	No.1	0.330 – 0.550 mm	0.0130 – 0.0217 in.
			No.2	0.450 – 0.670 mm	0.0177 – 0.0264 in.
			Oil	0.200 – 0.600 mm	0.0079 – 0.0236 in.
		Limit	No.1	0.85 mm	0.0335 in.
			No.2	0.97 mm	0.0382 in.
			Oil	0.90 mm	0.0354 in.
Connecting rod	Thrust clearance		STD	0.160 – 0.312 mm	0.0063 – 0.0123 in.
			Limit	0.35 mm	0.35 in.
	Connecting rod bearing center wall thickness				
		STD	Mark 1	1.484 – 1.488 mm	0.0584 – 0.0586 in.
			Mark 2	1.488 – 1.492 mm	0.0586 – 0.0587 in.
			Mark 3	1.492 – 1.496 mm	0.0587 – 0.0589 in.
	Connecting rod oil clearance	STD	STD	0.024 – 0.055 mm	0.0009 – 0.0022 in.
			U/S 0.25	0.023 – 0.069 mm	0.0009 – 0.0027 in.
		Limit		0.08 mm	0.0031 in.
	Rod bending Limit per 100 mm (3.94 in.)			0.05 mm	0.0020 in.
	Rod twist Limit per 100 mm (3.94 in.)			0.15 mm	0.0059 in.
	Bushing inside diameter			22.005 – 22.017 mm	0.8663 – 0.8668 in.
	Piston pin diameter			21.997 – 22.009 mm	0.8660 – 0.8665 in.
	Piston pin oil clearance		STD	0.005 – 0.011 mm	0.0002 – 0.0004 in.
			Limit	0.05 mm	0.0020 in.

Specifications (Cont'd)

Crankshaft	Thrust clearance		STD	0.020 – 0.220 mm	0.0008 – 0.0087 in.
			Limit	0.30 mm	0.0118 in.
	Thrust washer thickness		STD	2.440 – 2.490 mm	0.0961 – 0.0980 in.
	Main journal oil clearance				
	STD	No.3	STD	0.025 – 0.044 mm	0.0010 – 0.0017 in.
			U/S 0.25	0.021 – 0.061 mm	0.0008 – 0.0024 in.
		Others	STD	0.015 – 0.034 mm	0.0006 – 0.0013 in.
			U/S 0.25	0.029 – 0.069 mm	0.0011 – 0.0027 in.
	Limit			0.08 mm	0.0031 in.
	Main journal diameter		STD	54.988 – 55.003 mm	2.1653 – 2.1655 in.
			U/S 0.25	54.745 – 54.755 mm	2.1553 – 2.1557 in.
	Main bearing center wall thickness				
	STD	No.3	Mark 1	1.992 – 1.995 mm	0.0784 – 0.0785 in.
			Mark 2	1.995 – 1.998 mm	0.0785 – 0.0787 in.
			Mark 3	1.998 – 2.001 mm	0.0787 – 0.0788 in.
			Mark 4	2.001 – 2.004 mm	0.0788 – 0.0789 in.
			Mark 5	2.004 – 2.007 mm	0.0789 – 0.0790 in.
	STD	Others	Mark 1	1.997 – 2.000 mm	0.0786 – 0.0787 in.
			Mark 2	2.000 – 2.003 mm	0.0787 – 0.0789 in.
			Mark 3	2.003 – 2.006 mm	0.0789 – 0.0790 in.
			Mark 4	2.006 – 2.009 mm	0.0790 – 0.0791 in.
			Mark 5	2.009 – 2.012 mm	0.0791 – 0.0792 in.
	Crank pin diameter		STD	47.985 – 48.000 mm	1.8892 – 1.8898 in.
			U/S 0.25	47.745 – 47.755 mm	1.8797 – 1.8801 in.
	Circle runout		Limit	0.06 mm	0.0024 in.
	Main journal taper and out-of-round		Limit	0.02 mm	0.0008 in.
	Crank pin taper and out-of-round		Limit	0.02 mm	0.0008 in.

Torque Specifications

Part tightened		kg-cm	ft-lb	N·m
Oil pump pulley x Oil pump drive shaft		355	26	35
No.2 idler pulley x Cylinder block		440	32	43
No.1 idler pulley bracket x Cylinder head		440	32	43
Crankshaft pulley x Crankshaft		1,100	80	108
Camshaft timing pulley x Camshaft		600	43	59
	For SST	420	30	41
Timing belt tensioner x Cylinder head		210	15	21
Cylinder head x Cylinder block	1st	500	36	49
	2nd	Turn 90°		
Camshaft bearing cap x Cylinder head		190	14	19
No.3 timing belt cover x Cylinder head		90	78 in.-lb	8.8
Cylinder head cover x Cylinder head		25	21 in.-lb	2.5
Intake manifold x Cylinder head		195	14	19
Intake manifold stay x Intake manifold		260	19	25
Intake manifold stay x Cylinder block		260	19	25
Water by-pass pipe x Water pump cover		80	69 in.-lb	7.8
Water outlet x Cylinder head		400	29	39

Torque Specifications (Cont'd)

Part tightened		kg-cm	ft-lb	N·m
EGR valve x Intake manifold		195	14	19
EGR valve x Cylinder head		260	19	25
EGR pipe x Cylinder head		195	14	19
LH engine hanger x Cylinder head	12 mm head bolt	130	9	13
	14 mm head bolt	195	14	19
Exhaust manifold x Cylinder head		530	38	52
Catalytic converter x Turbine outlet elbow		300	22	29
Catalytic converter stay x Catalytic converter		600	43	59
RH front engine hanger x Cylinder head		400	29	39
Main bearing cap x Cylinder block		600	43	59
Connecting rod cap x Connecting rod		680	49	67
Rear oil seal retainer x Cylinder block		95	82 in.-lb	9.3
Knock sensor x Cylinder head		450	33	44
RH engine mounting bracket x Cylinder block		620	45	61
Alternator bracket x Cylinder block		440	32	43
Rear end plate x Cylinder block		95	82 in.-lb	9.3
Flywheel x Crankshaft		1,100	80	108
LH engine mounting bracket x Transaxle		530	38	52
Rear engine mounting bracket x Transaxle	14 mm head bolt	530	38	52
	17 mm head bolt	790	57	77
LH engine mounting insulator x LH engine mounting bracket				
	Front side	650	47	63
	Rear side	740	54	73
LH engine mounting insulator x Body		800	58	78
RH engine mounting insulator x RH engine mounting bracket		530	38	52
RH engine mounting insulator x Body		800	58	78
RH engine mounting stay x RH engine mounting insulator		740	54	73
RH engine mounting stay x RH engine mounting bracket		740	54	73
Air cleaner case x Body		360	26	35
LH engine mounting stay x LH engine mounting insulator		740	54	73
LH engine mounting stay x Transaxle		250	18	25
Lateral control rod x LH engine mounting insulator		380	27	37
Front engine mounting bracket x Transaxle		790	57	77
Clutch release cylinder x Transaxle		120	9	12
Front engine mounting insulator x Body		740	54	73
Rear suspension lower crossmember x Body		1,150	83	113
Stabilizer link x Shock absober		500	36	49
Rear engine mounting insulator x Body		650	47	64
Rear engine mounting insulator x Mounting bracket		800	58	79
Front engine mounting insulator x Mounting bracket		980	71	96
A/C compressor x Cylinder block		250	18	25
A/C idler pulley bracket x Cylinder block		275	20	27
A/C idler pulley bracket x RH front engine hanger		375	27	37
Suspension upper brace x Body	Bolt	740	54	73
	Nut	650	47	64

ENGINE MECHANICAL (5S-FE)

Specifications

Idle speed	USA	M/T		750 ± 50 rpm	
		A/T		700 ± 50 rpm	
	CANADA	M/T		850 ± 50 rpm	
		A/T		750 ± 50 rpm	
Intake manifold vacuum	at Idle speed			450 mmHg	17.7 in.Hg 60 kPa
Compression pressure	at 250 rpm		STD	12.5 kg/cm² (178 psi, 1,226 kPa) or more	
			Limit	10.0 kg/cm²	142 psi 981 kPa
	Difference of pressure between each cylinder			1.0 kg/cm² (14 psi, 98 kPa) or less	
Idler pulley tension spring	Free length			46.0 mm	1.811 in.
	Installed load at 51.9 mm (2.043 in.)			4.75 – 5.25 kg (10.5 – 11.6 lb, 47 – 52 N)	
Cylinder head	Warpage	Cylinder block side	Limit	0.05 mm	0.020 in.
		Manifold side	Limit	0.08 mm	0.031 in.
	Valve seat	Refacing angle		30°, 45°, 75°	
		Contacting angle		45°	
		Contacting width		1.0 – 1.4 mm	0.039 – 0.055 in.
Valve guide bushing	Inside diameter			6.010 – 6.030 mm	0.2366 – 0.2374 in.
	Outside diameter (for repair part)		STD	11.048 – 11.059 mm	0.4350 – 0.4354 in.
			O/S 0.05	11.098 – 11.109 mm	0.4369 – 0.4374 in.
Valve	Valve overall length	STD	Intake	100.60 mm	3.9606 in.
			Exhaust	100.45 mm	3.9547 in.
		Limit	Intake	100.1 mm	3.941 in.
			Exhaust	100.0 mm	3.937 in.
	Valve face angle			44.5°	
	Stem diameter		Intake	5.970 – 5.985 mm	0.2350 – 0.2356 in.
			Exhaust	5.965 – 5.980 mm	0.2356 – 0.2354 in.
	Stem oil clearance	STD	Intake	0.025 – 0.060 mm	0.0010 – 0.0024 in.
			Exhaust	0.030 – 0.065 mm	0.0012 – 0.0026 in.
		Limit	Intake	0.08 mm	0.0031 in.
			Exhaust	0.10 mm	0.0039 in.
	Margin thickness		STD	0.8 – 1.2 mm	0.031 – 0.047 in.
			Limit	0.5 mm	0.020 in.
Valve spring	Squareness		Limit	2.0 mm	0.079 in.
	Free length			45.0 mm	1.772 in.
	Installed tension at 34.7 mm (1.366 in.)			16.7 – 19.3 kg (36.8 – 42.5 lb, 164 – 189 N)	
Valve lifter	Lifter diameter			27.975 – 27.985 mm	1.1014 – 1.1018 in.
	Lifter bore diameter			28.000 – 28.021 mm	1.1024 – 1.1032 in.
	Oil clearance		STD	0.015 – 0.046 mm	0.0006 – 0.0018 in.
			Limit	0.07 mm	0.0028 in.
Manifold	Warpage		Limit	0.3 mm	0.0118 in.

Specifications (Cont'd)

Camshaft	Thrust clearance	STD	Intake	0.045 – 0.100 mm	0.0018 – 0.0039 in.
			Exhaust	0.030 – 0.085 mm	0.0012 – 0.0033 in.
		Limit	Intake	0.12 mm	0.0047 in.
			Exhaust	0.10 mm	0.0039 in.
	Journal oil clearance		STD	0.025 – 0.062 mm	0.0010 – 0.0024 in.
			Limit	0.10 mm	0.0039 in.
	Journal diameter			26.959 – 26.975 mm	1.0614 – 1.0620 in.
	Circle runout		Limit	0.04 mm	0.0016 in.
	Cam lobe height	STD	Intake	35.310 – 35.410 mm	1.3902 – 1.3941 in.
			Exhaust	35.560 – 35.660 mm	1.4000 – 1.4039 in.
		Limit	Intake	35.20 mm	1.3858 in.
			Exhaust	35.45 mm	1.3957 in.
	Camshaft gear backlash		STD	0.020 – 0.200 mm	0.0008 – 0.0079 in.
			Limit	0.30 mm	0.0188 in.
	Camshaft gear spring end free distance			22.5 – 22.9 mm	0.886 – 0.902 in.
Cylinder block	Cylinder head surface warpage		Limit	0.05 mm	0.0020 in.
	Cylinder bore diameter	STD	Mark 1	87.000 – 87.010 mm	3.4252 – 3.4256 in.
			Mark 2	87.010 – 87.020 mm	3.4256 – 3.4260 in.
			Mark 3	87.020 – 87.030 mm	3.4260 – 3.4264 in.
		Limit	STD	87.23 mm	3.4342 in.
			O/S 0.50	87.73 mm	3.4350 in.
Piston and piston ring	Piston diameter	STD	Mark 1	86.911 – 86.921 mm	3.4217 – 3.4221 in.
			Mark 2	86.921 – 86.931 mm	3.4221 – 3.4225 in.
			Mark 3	86.931 – 86.941 mm	3.4225 – 3.4229 in.
		O/S 0.50		87.411 – 87.441 mm	3.4414 – 3.4426 in.
	Piston oil clearance		STD	0.079 – 0.099 mm	0.0031 – 0.0039 in.
			Limit	0.119 mm	0.0047 in.
	Piston ring groove clearance			0.030 – 0.070 mm	0.0012 – 0.0028 in.
	Piston ring end gap	STD	No.1	0.270 – 0.500 mm	0.0106 – 0.0197 in.
			No.2	0.350 – 0.600 mm	0.0138 – 0.0234 in.
			Oil	0.200 – 0.550 mm	0.0079 – 0.0217 in.
		Limit	No.1	1.10 mm	0.0433 in.
			No.2	1.20 mm	0.0472 in.
			Oil	1.15 mm	0.0453 in.
Connecting rod	Thrust clearance		STD	0.160 – 0.312 mm	0.0063 – 0.0123 in.
			Limit	0.35 mm	0.35 in.
	Connecting rod bearing center wall thickness				
		STD	Mark 1	1.484 – 1.488 mm	0.0584 – 0.0586 in.
			Mark 2	1.488 – 1.492 mm	0.0586 – 0.0587 in.
			Mark 3	1.492 – 1.496 mm	0.0587 – 0.0589 in.
	Connecting rod oil clearance				
		STD	STD	0.024 – 0.055 mm	0.0009 – 0.0022 in.
			U/S	0.023 – 0.069 mm	0.0009 – 0.0027 in.
		Limit		0.08 mm	0.0031 in.
	Rod bending Limit per 100 mm (3.94 in.)			0.05 mm	0.0020 in.
	Rod twist Limit per 100 mm (3.94 in.)			0.15 mm	0.0059 in.
	Bushing inside diameter			22.005 – 22.017 mm	0.8663 – 0.8668 in.
	Piston pin diameter			21.997 – 22.009 mm	0.8660 – 0.8665 in.
	Piston pin oil clearance		STD	0.005 – 0.011 mm	0.0002 – 0.0004 in.
			Limit	0.05 mm	0.0020 in.
	Connecting rod bolt outside diameter		STD	7.860 – 8.000 mm	0.3094 – 0.3150 in.
			Limit	7.60 mm	0.2992 in.

Specifications (Cont'd)

Crankshaft	Thrust clearance			STD	0.020 – 0.220 mm	0.0008 – 0.0087 in.
				Limit	0.30 mm	0.0118 in.
	Thrust washer thickness			STD	2.440 – 2.490 mm	0.0961 – 0.0980 in.
	Main journal oil clearance					
		STD	No.3	STD	0.025 – 0.044 mm	0.0010 – 0.0017 in.
				U/S 0.25	0.027 – 0.067 mm	0.0011 – 0.0026 in.
			Others	STD	0.015 – 0.034 mm	0.0006 – 0.0013 in.
				U/S 0.25	0.019 – 0.059 mm	0.0007 – 0.0023 in.
		Limit			0.08 mm	0.0031 in.
	Main journal diameter			STD	54.988 – 55.003 mm	2.1653 – 2.1655 in.
				U/S 0.25	54.745 – 54.755 mm	2.1553 – 2.1557 in.
	Main bearing center wall thickness					
		STD	No.3	Mark 1	1.992 – 1.995 mm	0.0784 – 0.0785 in.
				Mark 2	1.995 – 1.998 mm	0.0785 – 0.0787 in.
				Mark 3	1.998 – 2.001 mm	0.0787 – 0.0788 in.
				Mark 4	2.001 – 2.004 mm	0.0788 – 0.0789 in.
				Mark 5	2.004 – 2.007 mm	0.0789 – 0.0790 in.
		STD	Others	Mark 1	1.997 – 2.000 mm	0.0786 – 0.0787 in.
				Mark 2	2.000 – 2.003 mm	0.0787 – 0.0789 in.
				Mark 3	2.003 – 2.006 mm	0.0789 – 0.0790 in.
				Mark 4	2.006 – 2.009 mm	0.0790 – 0.0791 in.
				Mark 5	2.009 – 2.012 mm	0.0791 – 0.0792 in.
	Crank pin diameter			STD	51.985 – 52.000 mm	2.0466 – 2.0472 in.
				U/S 0.25	51.745 – 51.755 mm	2.0372 – 2.0376 in.
	Circle runout			Limit	0.06 mm	0.0024 in.
	Main journal taper and out-of-round			Limit	0.02 mm	0.0008 in.
	Crank pin taper and out-of-round			Limit	0.02 mm	0.0008 in.

Torque Specifications

Part tightened		kg-cm	ft-lb	N·m
Oil pump pulley x Oil pump drive shaft		290	21	28
No.2 idler pulley x Cylinder block		425	31	42
Crankshaft pulley x Crankshaft		1,100	80	108
Camshaft timing pulley x Camshaft		550	40	54
	For SST	380	27	37
No.1 idler pulley x Cylinder Head		425	31	42
Cylinder head x Cylinder block	1st	500	36	49
	2nd	Turn 90°		
Camshaft bearing cap x Cylinder head		190	14	19
Cylinder head cover x Cylinder head		180	13	18
RH front engine hanger x Cylinder head		250	18	25
LH front engine hanger x Cylinder head		250	18	25
No.3 timing belt cover x Cylinder head		80	69 in.-lb	7.8
Intake manifold x Cylinder head		195	14	19
Intake manifold stay x Intake manifold		195	14	19
Intake manifold stay x Cylinder block		425	31	42
EGR valve x Cylinder head		130	9	13

Torque Specifications (Cont'd)

Part tightened		kg-cm	ft-lb	N·m
EGR pipe x Cylinder head		600	43	59
Water by-pass pipe x Water pump cover		95	82 in.-lb	9.3
Water outlet x Cylinder head		150	11	15
Catalytic converter x Exhaust manifold		300	22	29
Exhaust manifold x Cylinder head		500	36	49
Catalytic converter stay x Catalytic converter		425	31	42
Catalytic converter stay x Cylinder block		425	31	42
Main bearing cap x Cylinder block		600	43	59
Connecting rod cap x Connecting rod	1st	250	18	25
	2nd	Turn 90°		
Rear oil seal retainer x Cylinder block		95	82 in.-lb	9.3
RH engine mounting bracket x Cylinder block		620	45	61
Alternator bracket x Cylinder block		440	32	43
Rear end plate x Cylinder block		95	82 in.-lb	9.3
Flywheel x Crankshaft (M/T)		900	65	88
Drive plate x Crankshaft (A/T)		850	61	83
LH engine mounting bracket x Transaxle		530	38	52
LH engine mounting insulator x LH engine mounting bracket				
	Front side	650	47	63
	Rear side	740	54	73
LH engine mounting insulator x Transaxle (with LH enigne mounting bracket)		530	38	52
LH engine mounting insulator x Body		800	58	78
RH engine mounting insulator x RH engine mounting bracket		530	38	52
RH engine mounting insulator x Body		800	58	78
RH engine mounting stay x RH engine mounting insulator		740	54	73
RH engine mounting stay x RH front engine hanger		740	54	73
Air cleaner case x Body		360	26	35
LH engine mounting stay x LH engine mounting insulator		740	54	73
LH engine mounting stay x Transaxle		250	18	25
Lateral control rod x LH engine mounting insulator		380	27	37
Front engine mounting bracket x Transaxle		790	57	77
Clutch release cylinder x Transaxle		120	9	12
Rear engine mounting bracket x Transaxle		790	57	77
Front engine mounting insulator x Body		740	54	73
Rear engine mounting insulator x Body		650	47	64
Rear engine mounting insulator x Mounting bracket		800	58	79
Front engine mounting insulator x Mounting bracket		980	71	96
A/C compressor x Cylinder block		250	18	25
A/C idler pulley bracket x Cylinder block		275	20	27
A/C idler pulley bracket x RH front engine hanger		375	27	37
Suspension upper brace x Body	Bolt	740	54	73
	Nut	650	47	64

EXHAUST SYSTEM

Part tightened	kg-cm	ft-lb	N·m
Front exhaust pipe x Catalytic converter	630	46	62
Front exhaust pipe x Tailpipe	440	32	43
Front exhaust pipe bracket x Rear suspension crossmember	210	15	21
Front exhaust pipe stopper bracket x Tailpipe stopper bracket	210	15	21
Tail pipe x Tailpipe bracket	670	48	66

TURBOCHARGER SYSTEM

Specifications

Turbocharger	Turbocharging pressure	0.50 – 0.83 kg/cm^2 (7.1 – 11.8 psi, 49 – 81 kPa)
	Impeller wheel axial play	0.13 mm (0.0051 in.) or less
	Impeller wheel radial play	0.18 mm (0.0071 in.) or less

Torque Specifications

Part tightened		kg-cm	ft-lb	N·m
Turbine outlet elbow x Turbocharger		650	47	64
Side bearing housing plate x Turbocharger		120	9	11
Turbo water pipe x Turbocharger		120	9	11
Turbocharger x Exhaust manifold		650	47	64
Oil pipe x Turbocharger		175	13	17
Oil pipe x Cylinder block	Bolt	440	32	43
	Union bolt	525	38	51
Turbocharger stay x Turbocharger		705	51	69
Turbocharger stay x Cylinder block		600	43	59
Oxygen sensor x Turbine outlet elbow		450	33	44
No.4 air tube stay x Cylinder head		195	14	19
No.4 air tube stay x No.4 air tube		195	14	19
Air by-pass valve x No.4 air tube		195	14	19

EFI SYSTEM (3S-GTE)

Specifications

Fuel pressure regulator	Fuel pressure	at no vacuum	2.3 – 2.7 kg/cm² (33 – 38 psi, 226 – 265 kPa)
Cold start injector	Resistance Fuel leakage		2 – 4 Ω One drop or less per minute
Injector	Resistance Injection volume Difference between each cylinder Fuel leakage		2 – 4 Ω 95 – 120 cc (5.8 – 7.3 cu in.) per 15 sec. 5 cc (0.3 cu in.) or less One drop or less per minute
Air flow meter	Resistance VS – E2		200 – 600 Ω (Measuring plate fully closed) 20 – 1,200 Ω (Measuring plate fully open)
	VC – E2		200 – 400 Ω
	THA – E2	at –20°C (–4°F)	10 – 20 kΩ
		at 0°C (32°F)	4 – 7 kΩ
		at 20°C (68°F)	2 – 3 kΩ
		at 40°C (104°F)	0.9 – 1.3 kΩ
		at 60°C (140°F)	0.4 – 0.7 kΩ
Throttle body	Throttle body fully closed angle		6°

Throttle position sensor	Clearance between stop screw and lever	Between terminals	Resistance
	0 mm (0 in.)	VTA – E2	0.2 – 0.8 kΩ
	0.50 mm (0.020 in.)	IDL – E2	Less than 2.3 kΩ
	0.70 mm (0.028 in.)	IDL – E2	Infinity
	Throttle valve fully opened position	VTA – E2	3.3 – 10.3 kΩ
	—	VC – E2	3 – 8.3 kΩ

ISC valve	Resistance +B – RSC or RSO		17.7 – 23.9 Ω
Cold start injector time switch	Resistance STA – STJ	below 10°C (50°F)	30 – 50 Ω
		above 25°C (77°F)	70 – 90 Ω
	STA – Ground		30 – 90 Ω
Solenoid resistor	Resistance +B – No.10, No.20, No.30 or No.40		5 – 7 Ω
Fuel pump resistor	Resistance		Approx. 0.73 Ω
T-VIS VSV	Resistance		33 – 39 Ω
Turbocharging pressure VSV	Resistance		24 – 30 Ω
EGR VSV	Resistance		33 – 39 Ω

Specifications (Cont'd)

Water temp. sensor	Resistance	at –20°C (–4°F) at 0°C (32°F) at 20°C (68°F) at 40°C (104°F) at 60°C (140°F) at 80°C (176°F)	10 – 20 kΩ 4 – 7 kΩ 2 – 7 kΩ 0.9 – 1.3 kΩ 0.4 – 0.7 kΩ 0.2 – 0.4 kΩ
EGR gas temp. sensor	Resistance	at 50°C (112°F) at 100°C (212°F) at 150°C (302°F)	69.40 – 88.50 kΩ 11.89 – 14.37 kΩ 2.79 – 3.59 kΩ
Oxygen sensor	Heater coil resistance		5.1 – 6.3 Ω

ECU

HINT:
- Perform all voltage and resistance measurements with the ECU connected.
- Verity that the battery voltage in 11 V or above with the ignition switch is ON.

Voltage

Terminals	Condition		STD voltage (V)
+B, +B1 – E1	IG SW ON		10 – 14
BATT – E1	—		10 – 14
IDL – E2	IG SW ON	Throttle valve open	4 – 6
VTA – E2	IG SW ON	Throttle valve fully closed	0.1 – 1.0
VTA – E2	IG SW ON	Throttle valve fully open	3.2 – 4.2
VC – E2	IG SW ON	—	4 – 6
VS – E2	IG SW ON	Measuring plate fully closed	3.7 – 4.3
VS – E2	IG SW ON	Measuring plate fully open	0.2 – 0.5
VS – E2	Idling		2.6 – 3.6
VS – E2	3,000 rpm		1.0 – 2.0
No.1, No.2, No.3, No.4 – E01, E02	IG SW ON		10 – 14
THA1 – E2	IG SW ON	Intake air temp. 20°C (68°F)	1 – 3
THW – E2	IG SW ON	Coolant temp. 80°C (176°F)	0.1 – 1.1
STA – E1	Cranking		6 – 14
IGT – E1	Cranking or idling		0.8 – 1.2

Specifications (Cont'd)

ECU (cont'd)	Voltage (cont'd)			
	Terminals	Condition		STD voltage (V)
	RSC, RSO – E1	IG SW ON	Engine ECU connector disconnected	8 – 14
	W – E1	No trouble ("CHECK" engine warning light off) and engine running		10 – 14
	PIM – E2	IG SW ON		2.5 – 4.5
	AC1 – E1	IG SW ON	Air conditioning ON	8 – 14
	ACT – E1		Air conditioning ON	4 – 6
w/ Regular unleaded gasoline	TVIS – E1		Throttle valve fully closed	2.0 or less
			Throttle valve open	10 – 14
w/o Premium unleaded gasoline	TVIS – E1		Idling	2.0 or less
			4,200 rpm or more	10 – 14
	T – E1	IG SW ON	Check connector TE1 – E1 not connected	10 – 14
			Check connector TE1 – E1 connected	0.5 or less
	Resistance			
	Terminals	Condition		STD resistance (Ω)
	IDL – E2	Throttle valve open		Infinity
		Throttle valve fully closed		2,300 or less
	VTA – E2	Throttle valve fully open		3,500 – 10,000
		Throttle valve fully closed		200 – 800
	VC – E2	—		200 – 400
	VS – E2	Measuring plate fully closed		200 – 600
		Measuring plate fully open		20 – 1,200
	THA1 – E2	Intake air temp. 20°C (68°F)		2,000 – 3,000
	THW – E2	Coolant temp. 80°C (176°F)		200 – 400
	G1, G2 – G⊖	—		140 – 180
	NE – G⊖	—		180 – 220
	RSC, RSO – +B, +B1	—		17.7 – 23.9
Fuel cut rpm	w/ Vehicle speed 0 km/h and coolant and coolant temp. 80°C (176°F)		Fuel cut rpm	2,000 rpm
			Fuel return rpm	1,600 rpm

Torque Specifications

Part tightened		kg-cm	ft-lb	N·m
Fuel line	Union bolt type	300	22	29
	Flare nut type	310	22	30
Fuel pump x Fuel tank		35	30 in.-lb	3.4
Fuel sender gauge x Fuel tank		15	13 in.-lb	1.5
Fuel evaporation bent tube x Fuel tank		15	13 in.-lb	1.5
Fuel tank filler pipe x Fuel tank		35	30 in.-lb	3.4
Fuel tank band x Body		300	22	29
No.2 center crossmember x Body		300	22	29
Cold start injector x Intake manifold		60	52 in.-lb	5.9
Cold start injector pipe x Cold start injector		180	13	18
Cold start injector pipe x Delivery pipe		180	13	18
Fuel pressure regulator x Delivery pipe		300	22	29
Injector cover x Delivery pipe		80	69 in.-lb	7.8
Fuel inlet hose x Delivery pipe	Bolt	80	69 in.-lb	7.8
	Union bolt	300	22	29
Delivery pipe x Cylinder head		195	14	19
Fuel inlet hose x Fuel filter		300	22	29
Throttle body x Intake manifold		195	14	19
Intake air connector stay x Throttle body		195	14	19
Intake air connector stay x Cylinder head		80	69 in.-lb	7.8
Intake air connector x Throttle body		195	14	19

EFI SYSTEM (5S-FE)

Specifications

Fuel pressure regulator	Fuel pressure at no vacuum		2.7 – 3.1 kg/cm² (38 – 44 psi, 265 – 304 kPa)	
Cold start injector	Resistance		2 – 4 Ω	
	Fuel leakage		One drop or less per minute	
Injector	Resistance		Approx. 13.8 kΩ	
	Injection volume		45 – 55 cc (2.7 – 3.4 cu in.)/15 sec.	
	Difference between each injector		5 cc (0.31 cu in.) or less	
	Fuel leakage		One drop or less per minute	
Throttle body	Throttle body fully closed angle		6°	
Throttle position sensor (M/T)	Throttle opening angle (from Vertical)	Clearance between stop screw and lever	IDL – E1	PSW – E1
	—	0.50 mm 0.020 in.	Continuity	No continuity
	—	0.90 mm 0.035 in.	No continuity	No continuity
	Throttle valve fully opened	—	No continuity	Continuity
	71°	—	No continuity	No continuity
	81°	—	No continuity	Continuity
	7.5° or less	—	Continuity	No continuity
Throttle position sensor (A/T)	Clearance between stop screw and lever		Between terminals	Resistance
	0 mm 0 in.		VTA – E2	0.2 – 0.8 kΩ
	0.50 mm 0.020 in.		IDL – E2	2.3 kΩ or less
	0.70 mm 0.028 in.		IDL – E2	Infinity
	Throttle valve fully opened position		VTA – E2	3.3 – 10 kΩ
	—		VC – E2	3 – 7 kΩ

Specifications (Cont'd)

ISC valve	Resistance	+B – ISCC or ISCO	19.3 – 22.3 Ω
Cold start injector time switch	Resistance	STA – STJ below 30°C (68°F) STA – STJ above 40°C (104°F) STA – Ground	20 – 40 Ω 40 – 60 Ω 20 – 80 Ω
Fuel pressure VSV	Resistance		33 – 39 Ω
EGR VSV	Resistance		33 – 39 Ω
Water temp. sensor	Resistance	at –20°C (–4°F) at 0°C (32°F) at 20°C (68°F) at 40°C (104°F) at 60°C (140°F) at 80°C (176°F)	10 – 20 kΩ 4 – 7 kΩ 2 – 3 kΩ 0.9 – 1.3 kΩ 0.4 – 0.7 kΩ 0.2 – 0.4 kΩ
Intake air temp. sensor	Resistance	at –20°C (–4°F) at 0°C (32°F) at 20°C (68°F) at 40°C (104°F) at 60°C (140°F) at 80°C (176°F)	10 – 20 kΩ 4 – 7 kΩ 2 – 3 kΩ 0.9 – 1.3 kΩ 0.4 – 0.7 kΩ 0.2 – 0.4 kΩ
EGR gas temp. sensor (CALIF. only)	Resistance	at 50°C (112°F) at 100°C (212°F) at 150°C (302°F)	69.40 – 88.50 kΩ 11.89 – 14.37 kΩ 2.79 – 3.59 kΩ

ECU

HINT:
- Perform all voltage and resistance measurements with the computer connected.
- Verity that the battery voltage is 11 V or above with the ignition switch is ON.

Voltage

	Terminals	Condition		STD voltage (V)
	+B, +B1 – E1	IG SW ON		10 – 14
	BATT – E1	—		10 – 14
M/T	IDL – E1	IG SW ON	Throttle valve open	8 – 14
M/T	PSW – E1	IG SW ON	Throttle valve fully closed (Throttle opener must be cancelled first)	4.5 – 5.5
A/T	IDL – E2	IG SW ON	Throttle valve open	8 – 14
A/T	VTA – E2	IG SW ON	Throttle valve fully closed (Throttle opener must be cancelled first)	0.8 – 1.2
A/T	VTA – E2	IG SW ON	Throttle valve fully open	3.2 – 4.2
	PIM – E2	IG SW ON		3.3 – 3.9
	VC – E2	IG SW ON		4.5 – 5.5
	No.10 – E01 No.20 – E02	IG SW ON		10 – 14

Specifications (Cont'd)

ECU (cont'd)	Voltage (cont'd)			
	Terminals	Condition		STD voltage (V)
	THA – E2	IG SW ON	Intake air temp. 20°C (68°F)	1.7 – 3.1
	THW – E2		Coolant temp. 80°C (176°F)	0.3 – 0.8
	STA – E1	Cracking		6 – 14
	IGT – E1	Cranking or idling		0.8 – 1.2
	ISCC, ISCO – E1	IG SW ON		8 – 14
	W – E1	No trouble ("CHECK" engine warning light off) and engine running		8 – 14
	A/C – E1	IG SW ON	Air conditioning ON	8 – 14
A/T	ACT – E1		Air conditioning ON	4.5 – 5.5
	T – E1		Check connector TE1 – E1 not connected	10 – 14
			Check connector T – E1 connected	1 or less
	NSW – E1		Neutral start switch P or N range	0 – 2
			Ex. neutral start switch P or N range	6 – 14
	B/K – E1	Stop light SW ON (Brake pedal depressed)		10 – 14
	Resistance			
	Terminals	Condition		Resistance (Ω)
M/T	IDL – E1	Throttle valve fully open		Infinity
		Throttle valve fully closed (Throttle opener must be cancelled first)		0
	PSW – E1	Throttle valve fully open		0
		Throttle valve fully closed (Throttle opener must be cancelled first)		Infinity
A/T	IDL – E2	Throttle valve fully open		Infinity
		Throttle valve fully closed (Throttle opener must be cancelled first)		2,300 or less
	VTA – E2	Throttle valve fully open		3,300 – 10,000
		Throttle valve fully closed (Throttle opener must be cancelled first)		200 – 800
	VC – E2	—		3,000 – 7,000

Specifications (Cont'd)

ECU (cont'd)	Resistance (cont'd)		
	Terminals	Condition	Resistance (Ω)
	THA – E2	Intake air temp. 20° (68°F)	2,000 – 3,000
	THW – E2	Coolant temp. 80° (176°F)	200 – 400
	G, NE – G⊖	—	140 – 180
	ISCC, ISCO – +B, +B1	—	19.3 – 22.3
Fuel cut rpm	w/ Vehicle speed 0 km/h and coolant and coolant temp. 80°C (176°F)	Fuel cut rpm	1,600 rpm
		Fuel return rpm	1,500 rpm

Torque Specifications

Part tightened		kg-cm	ft-lb	N·m
Fuel line	Union bolt type	300	22	29
	Flare nut type	310	22	30
Fuel pump x Fuel tank		35	30 in.-lb	3.4
Fuel sender gauge x Fuel tank		15	13 in.-lb	1.5
Fuel evaporation bent tube x Fuel tank		15	13 in.-lb	1.5
Fuel tank filler pipe x Fuel tank		35	30 in.-lb	3.4
Fuel tank band x Body		300	22	29
No.2 center crossmember x Body		300	22	29
Cold start injector x Intake manifold		95	82 in.-lb	9.3
Cold start injector pipe x Cold start injector		180	13	18
Cold start injector pipe x Delivery pipe		180	13	18
Fuel pressure regulator x Delivery pipe		55	48 in.-lb	5.4
Fuel return pipe x Fuel pressure regulator		180	13	18
Fuel pulsation damper x Delivery pipe		350	25	34
Delivery pipe x Cylinder head		130	9	13
Throttle body x Intake manifold		195	14	19

COOLING SYSTEM

Specifications

Engine coolant capacity			See page A-2
Radiator cap	Relief valve opening pressure	STD	0.75 – 1.05 kg/cm² (10.7 – 14.9 psi, 74 – 103 kPa)
		Limit	0.6 kg/cm² 8.5 psi 59 kPa
Thermostat	Valve opening temperature		80 – 84°C 176 – 183°F
	Valve lift at 95°C (203°F)		8 mm (0.31 in.) or more

Torque Specifications

Part tightened		kg-cm	ft-lb	N·m
Engine block x Drain plug	3S-GTE	250	18	25
	5S-FE	130	9	13
Radiator pipe x Drain plug		170	12	17
Water pump x Water pump cover		95	82 in.-lb	9.3
Water pump x Cylinder block	3S-GTE	80	69 in.-lb	7.8
	5S-FE	95	82 in.-lb	9.3
Water by-pass pipe x Water pump	3S-GTE	120	9	12
	5S-FE	95	82 in.-lb	9.3
Water inlet x Water pump	3S-GTE	80	69 in.-lb	7.8
	5S-FE	90	78 in.-lb	8.8

LUBRICATION SYSTEM

Specifications

Engine oil capacity		See page A-21	
Oil pressure	at idling	0.3 kg/cm^2 (4.3 psi, 29 kPa) or more	
	at 3000 rpm	2.5 – 5.0 kg/cm^2 (36 – 71 psi, 245 – 490 kPa)	
Oil pump	Body clearance STD	0.100 – 0.160 mm	0.0039 – 0.0063 in.
	Body clearance Limit	0.20 mm	0.0079 in.
	Tip clearance STD	0.040 – 0.160 mm	0.0016 – 0.0063 in.
	Tip clearance Limit	0.20 mm	0.0079 in.

Torque specifications

Part tightened		kg-cm	ft-lb	N·m
Engine pan x Drain plug	3S-GTE	200	14	20
	5S-FE	400	29	39
Oil pump body cover x Oil pump body		90	78 in.-lb	8.8
Oil pump x Cylinder block	3S-GTE	80	69 in.-lb	7.8
	5S-FE	95	82 in.-lb	9.3
Oil strainer x Cylinder block		55	48 in.-lb	5.4
Oil strainer x Oil pump		55	48 in.-lb	5.4
Oil pan x Cylinder block		55	48 in.-lb	5.4
Oil pan x Oil pump		55	48 in.-lb	5.4
Stiffener plate x Cylinder block		380	27	37
Stiffener plate x Transaxle case		380	27	37
Oil cooler bracket x Cylinder block (3S-GTE)		80	69 in.-lb	7.8
Oil cooler x Oil cooler bracket (3S-GTE)		800	58	78
Water by-pass pipe x Oil cooler (3S-GTE)		120	9	12
Water by-pass pipe x Oil cooler bracket (3S-GTE)		180	13	18
Oil cooler x Cylinder block (5S-FE)	Relief valve	450	33	44
	Nut	80	69 in.-lb	7.8
Oil nozzle x Cylinder block		93	81 in.-lb	9.1

IGNITION SYSTEM

Ignition timing			10° BTDC @ idle (w/ Terminals TE1 and E1 connected)
Firing order			1 – 3 – 4 – 2
Spark plug			See page A-2
High-tension cord	Resistance		25 kΩ per cord
Ignition coil	Primary coil resistance		0.40 – 0.50 Ω
	Secondary coil resistance		10.0 – 14.0 kΩ
Distributor	Air gap		0.2 – 0.4 mm (0.008 – 0.016 in.)
	Signal generator (pickup coil) resistance		
		3S-GTE G1 – G⊖	140 – 180 Ω
		3S-GTE G2 – G⊖	140 – 180 Ω
		3S-GTE NE – G⊖	180 – 220 Ω
		5S-FE	170 – 210 Ω

STARTING SYSTEM

Starter	Rated voltage and output power		12 V 1.0 kW	12 V 1.4 kW, 12 V 1.6 kW
	No-load characteristic	Current	90 A or less at 11.5 V	←
		rpm	3,000 rpm or more	3,000 rpm or more (1.4 kW compact type) 3,500 rpm or more (Others)
	Brush length	STD	13.5 mm (0.531 in.)	15.5 mm (0.610 in.)
		Limit	8.5 mm (0.335 in.)	10.0 mm (0.394 in.)
	Commutator			
	Outer diameter	STD	30 mm (1.18 in.)	←
		Limit	29 mm (1.14 in.)	←
	Undercut depth	STD	0.6 mm (0.024 in)	←
		Limit	0.2 mm (0.008 in.)	←
	Circle runout	Limit	0.05 mm (0.0020 in.)	←
	Spring installed load		1.79 – 2.41 kg (3.9 – 5.3 lb, 18 – 24 N)	←

CHARGING SYSTEM

Drive belt tension			See page A-2
Battery specific gravity	when fully charge at 20°C (68°F)		1.25 – 1.27
Alternator	Rated output		12 V – 70 A, 12 V – 80 A, 12 V – 100 A
	Rotor coil resistance		2.8 – 3.0 Ω
	Slip ring diameter	STD	14.2 – 14.4 mm (0.559 – 0567 in.)
		Limit	12.8 mm (0.504 in.)
	Brush exposed length	STD	10.5 mm (0.413 in.)
		Limit	1.5 mm (0.059 in.)
Alternator regulator	Regulating voltage	at 25°C (77°F)	13.9 – 15.1 V
		at 115°C (239°F)	13.5 – 14.3 V

LUBRICANT

Item	Capacity			Classification
	Liters	US qts	Imp. qts	
Engine oil				API grade SG, multigrade fuel-efficient and recommended viscosity oil
3S-GTE				
Dry fill	4.3	4.5	3.8	
Drain and refill				
w/ Oil filter change	3.9	4.1	3.4	
w/o Oil filter change	3.6	3.8	3.2	
5S-FE				
Dry fill	4.4	4.7	3.9	
Drain and refill				
w/ Oil filter change	4.0	4.2	3.5	
w/o Oil filter change	3.8	4.0	3.3	

STANDARD BOLT TORQUE SPECIFICATIONS

Page

STANDARD BOLT TORQUE SPECIFICATIONS B-2

STANDARD BOLT TORQUE SPECIFICATIONS

HOW TO DETERMINE BOLT STRENGTH

	Mark	Class
Hexagon head bolt	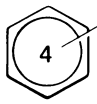 Bolt head No. 4— 5— 6— 7— 8— 9— 10— 11—	4T 5T 6T 7T 8T 9T 10T 11T
	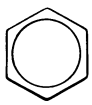 No mark	4T
Hexagon flange bolt w/ washer hexagon bolt	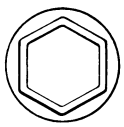 No mark	4T
Hexagon head bolt	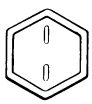 Two protruding lines	5T
Hexagon flange bolt w/ washer hexagon bolt	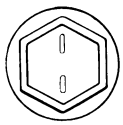 Two protruding lines	6T
Hexagon head bolt	Three protruding lines	7T
Hexagon head bolt	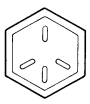 Four protruding lines	8T

	Mark	Class
Stud bolt	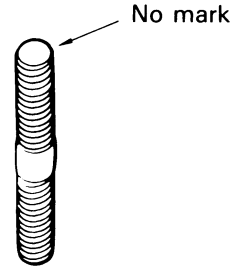 No mark	4T
	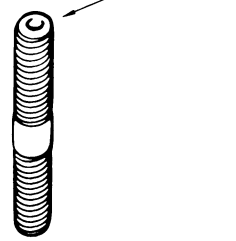 Grooved	6T
Welded bolt	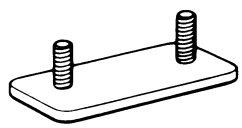	4T

SPECIFIED TORQUE FOR STANDARD BOLTS

Class	Diameter mm	Pitch mm	Specified torque					
			Hexagon head bolt			Hexagon flange bolt		
			kg-cm	ft-lb	N·m	kg-cm	ft-lb	N·m
4T	6	1	55	48 in.-lb	5	60	52 in.-lb	6
	8	1.25	130	9	12.5	145	10	14
	10	1.25	260	19	26	290	21	29
	12	1.25	480	35	47	540	39	53
	14	1.5	760	55	74	850	61	84
	16	1.5	1,150	83	115	—	—	—
5T	6	1	65	56 in.-lb	6.5	75	65 in.-lb	7.5
	8	1.25	160	12	15.5	175	13	17.5
	10	1.25	330	24	32	360	26	36
	12	1.25	600	43	59	670	48	65
	14	1.5	930	67	91	1,050	76	100
	16	1.5	1,400	101	140	—	—	—
6T	6	1	80	69 in.-lb	8	90	78 in.-lb	9
	8	1.25	195	14	19	210	15	21
	10	1.25	400	29	39	440	32	44
	12	1.25	730	53	71	810	59	80
	14	1.5	1,100	80	110	1,250	90	125
	16	1.5	1,750	127	170	—	—	—
7T	6	1	110	8	10.5	120	9	12
	8	1.25	260	19	25	290	21	28
	10	1.25	530	38	52	590	43	58
	12	1.25	970	70	95	1,050	76	105
	14	1.5	1,500	108	145	1,700	123	165
	16	1.5	2,300	166	230	—	—	—
8T	8	1.25	300	22	29	330	24	33
	10	1.25	620	45	61	690	50	68
	12	1.25	1,100	80	110	1,250	90	120
9T	8	1.25	340	25	34	380	27	37
	10	1.25	710	51	70	790	57	78
	12	1.25	1,300	94	125	1,450	105	140
10T	8	1.25	390	28	38	430	31	42
	10	1.25	800	58	78	890	64	88
	12	1.25	1,450	105	140	1,600	116	155
11T	8	1.25	430	31	42	480	35	47
	10	1.25	890	64	87	990	72	97
	12	1.25	1,600	116	155	1,800	130	175

FOREWORD

This manual (Volume 2) contains repair procedures for the chassis and body, and electrical service procedures, for the 1991 MR2.

Applicable models: SW20, 21 series

For maintenance and engine repair procedures, refer to VOLUME 1 (Pub. No. RM179U1).

The manual is divided into 10 sections and 4 appendixes with a thumb index for each section at the edge of the pages.

Please note that the publications below have also been prepared as relevant service manuals to the components and systems in this vehicle.

Manual Name	Pub. No.
• 1991 MR2 Electrical Wiring Diagram Manual	EWD083U
• 1991 MR2 New Car Features	NCF062U

All information in this manual is based on the latest product information at the time of publication. However, specifications and procedures are subject to change without notice.

TOYOTA MOTOR CORPORATION

1991 TOYOTA MR2
REPAIR MANUAL VOLUME 2

NOTE: The screen toned sections below are in VOLUME 1 (Pub.No.RM179U1).

INTRODUCTION IN
MAINTENANCE MA
ENGINE MECHANICAL EM
EXHAUST SYSTEM EX
TURBOCHARGER SYSTEM TC
EMISSION CONTROL SYSTEMS EC
EFI SYSTEM FI
COOLING SYSTEM CO
LUBRICATION SYSTEM LU
IGNITION SYSTEM IG
STARTING SYSTEM ST
CHARGING SYSTEM CH
CLUTCH CL
MANUAL TRANSAXLE MT
AUTOMATIC TRANSAXLE AT
SUSPENSION AND AXLE SA
BRAKE SYSTEM BR
STEERING SR
SRS AIRBAG AB
BODY ELECTRICAL SYSTEM BE
BODY BO
AIR CONDITIONING SYSTEM AC
SERVICE SPECIFICATIONS A
STANDARD BOLT TORQUE SPECIFICATIONS B
SST AND SSM C
ELECTRICAL WIRING DIAGRAMS D

CLUTCH

	Page
TROUBLESHOOTING	CL-2
CHECK AND ADJUSTMENT OF CLUTCH PEDAL	CL-3
BLEEDING OF CLUTCH SYSTEM	CL-4
INSPECTION OF CLUTCH START SYSTEM	CL-5
CLUTCH MASTER CYLINDER	CL-6
CLUTCH RELEASE CYLINDER	CL-9
CLUTCH UNIT	CL-13

TROUBLESHOOTING

Problem	Possible cause	Remedy	Page
Hard to shift or will not shift	Clutch pedal freeplay excessive	Adjust pedal freeplay	CL-3
	Air in clutch lines	Bleed clutch system	CL-4
	Clutch release cylinder faulty	Repair release cylinder	CL-8
	Clutch master cylinder faulty	Repair master cylinder	CL-5
	Clutch disc out of true, runout is excessive or lining broken	Inspect clutch disc	CL-13
	Splines on input shaft or clutch disc dirty or burred	Repair as necessary	CL-12
	Clutch pressure plate faulty	Replace clutch cover	CL-12
Clutch slips	Clutch pedal freeplay insufficient	Adjust pedal freeplay	CL-3
	Clutch disc lining oily or worn out	Inspect clutch disc	CL-13
	Pressure plate faulty	Replace clutch cover	CL-12
	Release fork binding	Inspect release fork	
Clutch grabs/ chatters	Clutch disc lining oily or worn out	Inspect clutch disc	CL-13
	Pressure plate faulty	Replace clutch cover	CL-12
	Clutch diaphragm spring bent	Align clutch diaphragm	CL-14
	Engine mounts loose	Repair as necessary	
Clutch pedal spongy	Air in clutch lines	Bleed clutch system	CL-4
	Clutch release cylinder faulty	Repair release cylinder	CL-8
	Clutch master cylinder faulty	Repair master cylinder	CL-5
Clutch noisy	Loose part inside housing	Repair as necessary	
	Release bearing worn or dirty	Replace release bearing	CL-14
	Release fork or linkage sticking	Repair as necessary	

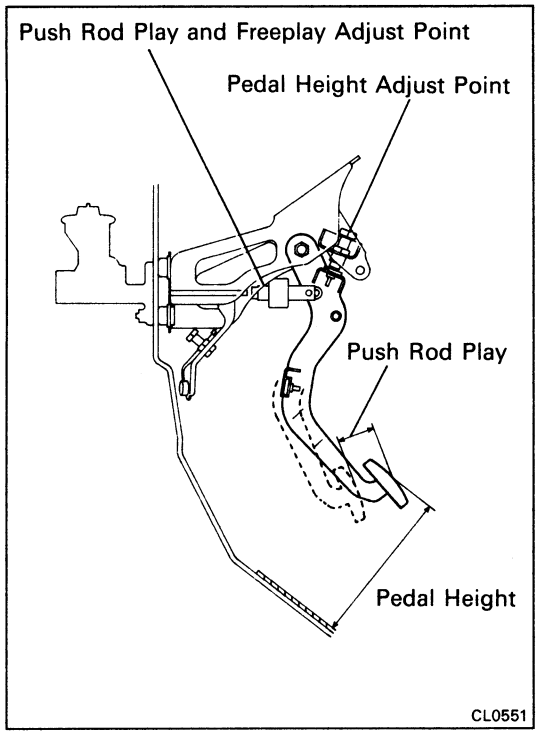

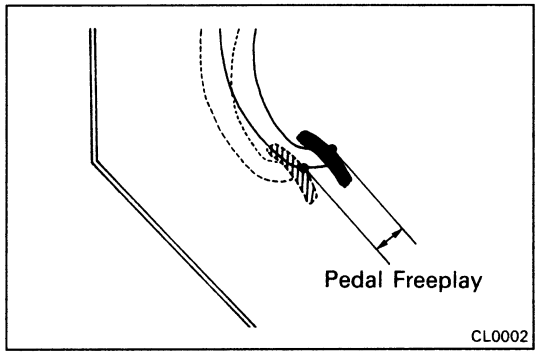

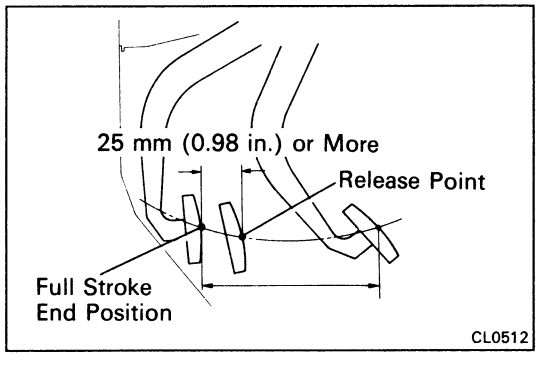

CHECK AND ADJUSTMENT OF CLUTCH PEDAL

1. **CHECK THAT PEDAL HEIGHT IS CORRECT**

   Pedal height from asphalt sheet: 184 – 194 mm (7.2 – 7.6 in.)

2. **IF NECESSARY, ADJUST PEDAL HEIGHT**

   Loosen the lock nut and turn the stopper bolt until the height is correct. Tighten the lock nut.

3. **CHECK THAT PEDAL FREEPLAY AND PUSH ROD PLAY ARE CORRECT**

   (Pedal Freeplay)

   Push in on the pedal until the beginning of clutch resistance is felt.

   Pedal freeplay: 5.0 – 15.0 mm (0.197 – 0.591 in.)

   (Push rod play)

   Push in on the pedal with a finger softly until the resistance begins to increase a little.

   Push rod play at pedal top: 1.0 – 5.0 mm (0.039 – 0.197 in.)

4. **IF NECESSARY, ADJUST PEDAL FREEPLAY AND PUSH ROD PLAY**

   (a) Loosen the lock nut and turn the push rod until the freeplay and push rod play are correct.

   (b) Tighten the lock nut.

   (c) After adjusting the pedal freeplay, check the pedal height.

5. **INSPECT CLUTCH RELEASE POINT**

   (a) Pull the parking brake lever and install wheel stopper.

   (b) Start the engine and idle the engine.

   (c) Without depressing the clutch pedal, slowly shift the shift lever into reverse position until the gears contact.

   (d) Gradually depress the clutch pedal and measure the stroke distance from the point the gear noise stops (release point) up to the full stroke end position.

   Standard distance: 25 mm (0.98 in.) or more (From pedal stroke end position to release point)

   If the distance is not as specified, perform the following operation.

   - Inspect pedal height.
   - Inspect push rod play and pedal freeplay.
   - Bleed the clutch line.
   - Inspect the clutch cover and disc.

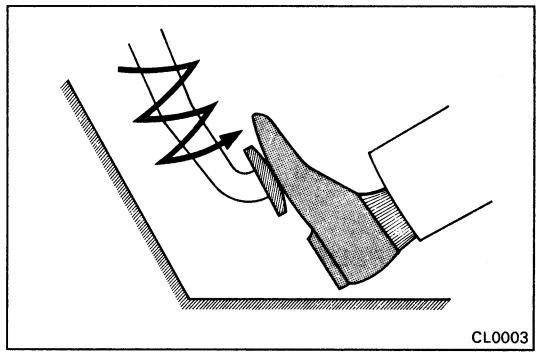

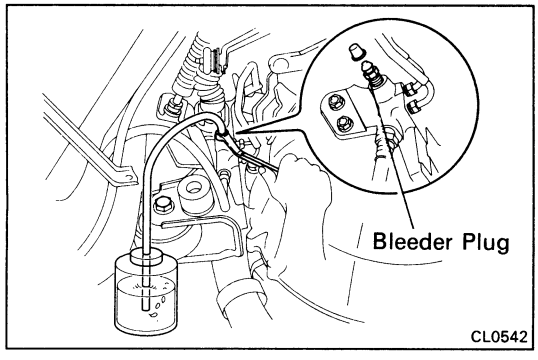

BLEEDING OF CLUTCH SYSTEM

HINT: If any work is done on the clutch system or if air is suspected in the clutch lines, bleed the system of air.

NOTICE: Do not let brake fluid remain on a painted surface. Wash it off immediately.

1. **FILL CLUTCH RESERVOIR WITH BRAKE FLUID**

   Check the reservoir frequently. Add fluid if necessary.

2. **CONNECT VINYL TUBE TO BLEEDER PLUG**

   Insert the other end of the tube in a half-full container of brake fluid.

3. **BLEED CLUTCH LINE**

   (a) Slowly pump the clutch pedal several times.

   (b) While pressing on the pedal, loosen the bleeder plug until the fluid starts to run out. Then close the bleeder plug.

   (c) Repeat this procedure until there are no more air bubbles in the fluid.

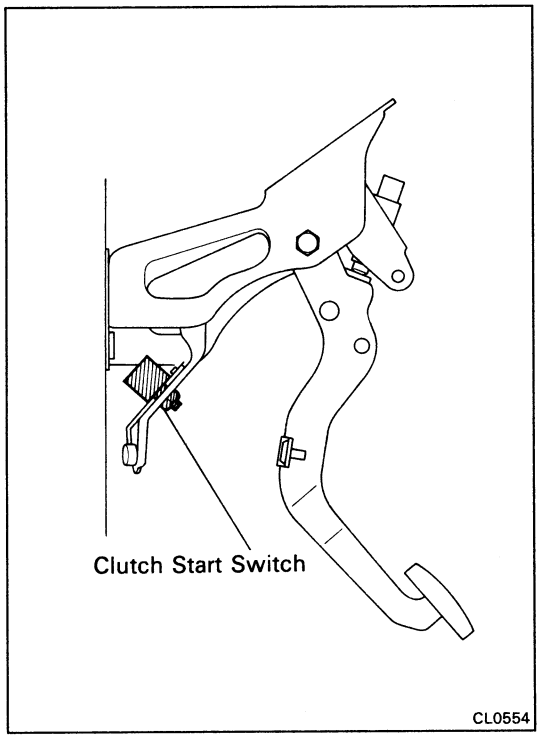

INSPECTION OF CLUTCH START SYSTEM

CHECK CLUTCH PEDAL

1. **CHECK THAT PEDAL HEIGHT IS CORRECT**
   (See page CL-3)

2. **CHECK THAT PEDAL FREEPLAY AND PUSH ROD PLAY ARE CORRECT**
   (See page CL-3)

CHECK CLUTCH START SYSTEM

CHECK CLUTCH START SYSTEM

(a) Check that the engine does not start when the clutch pedal is released.

(b) Check that the engine starts when the clutch pedal is fully depressed.

If necessary, adjust or replace the clutch start switch.

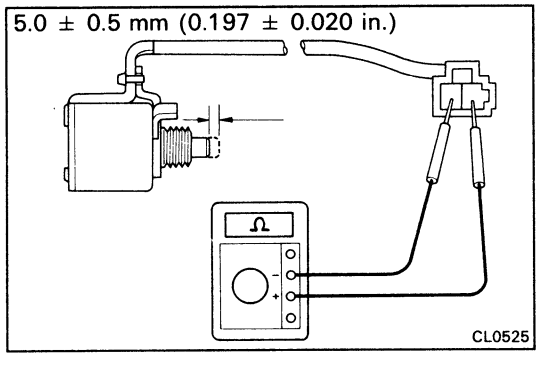

INSPECTION OF CLUTCH START SWITCH

INSPECT CONTINUITY OF CLUTCH START SWITCH

(a) Check that there is continuity between terminals when the switch is ON (pushed).

(b) Check that there is no continuity between terminals when the switch is OFF (free).

If continuity is not as specified, replace the switch.

CLUTCH MASTER CYLINDER

COMPONENTS

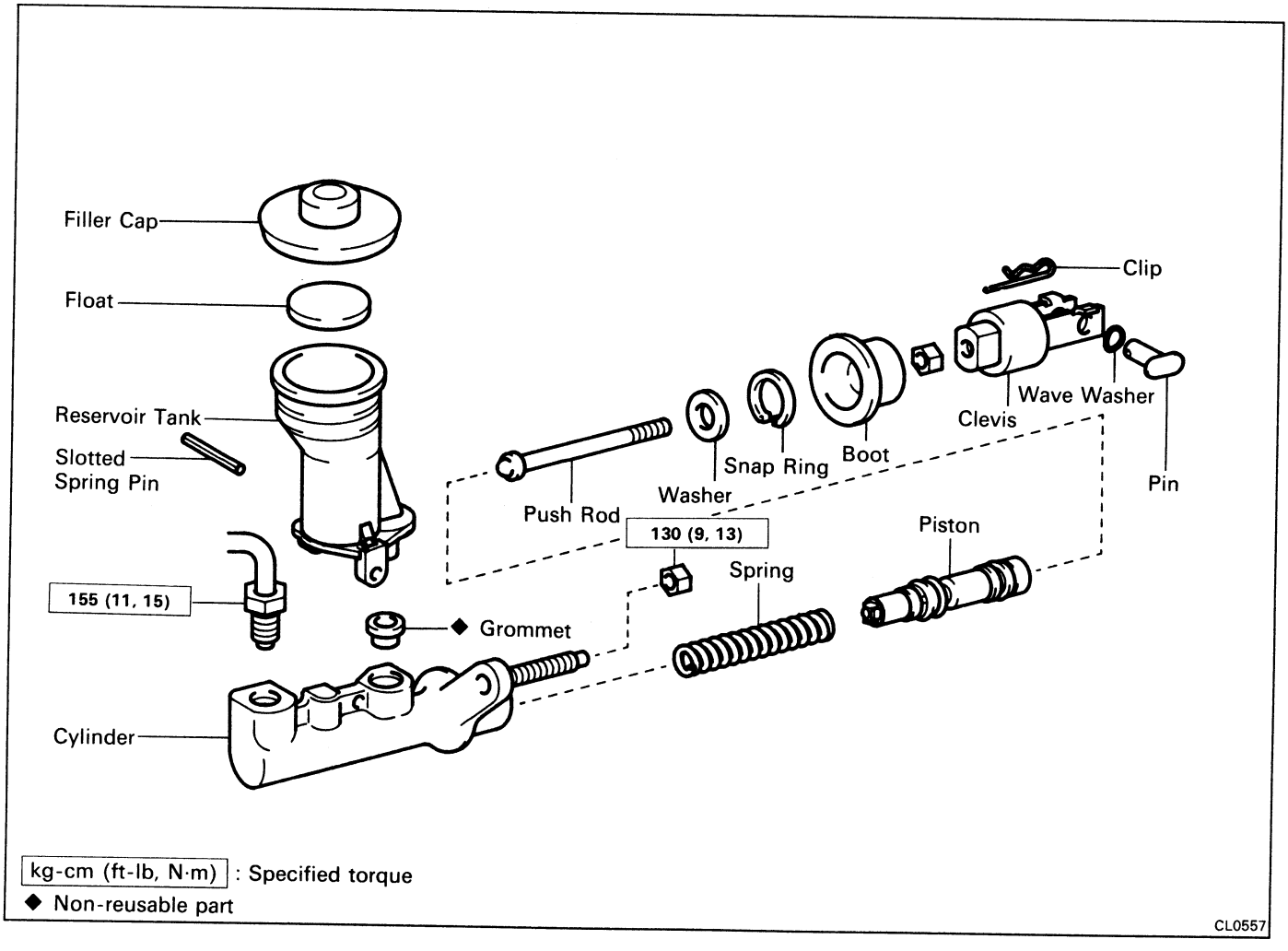

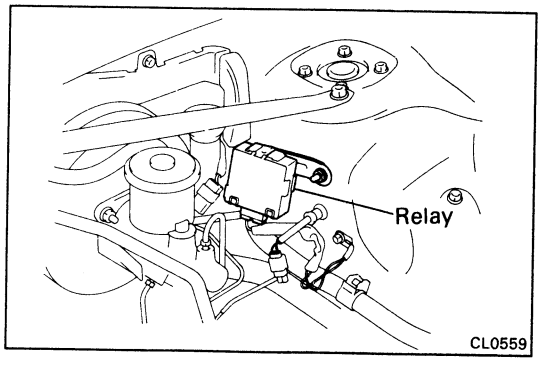

REMOVAL OF MASTER CYLINDER

1. **REMOVE PUSH ROD PIN**
2. **REMOVE RETRACTOR CONTROL RELAY**

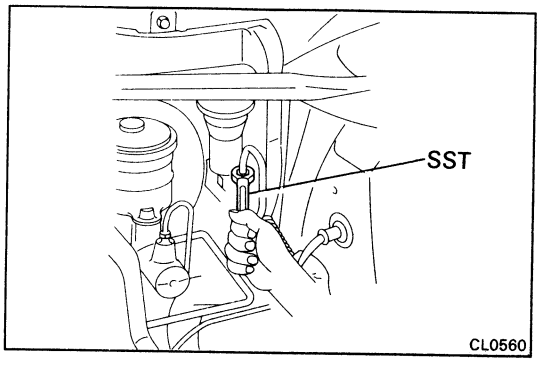

3. **DISCONNECT CLUTCH LINE UNION**
   Using SST, disconnect the union nut.
   SST 09751-36011
4. **REMOVE MASTER CYLINDER**
   (a) Remove the two mounting nuts.
   (b) Pull out the master cylinder.

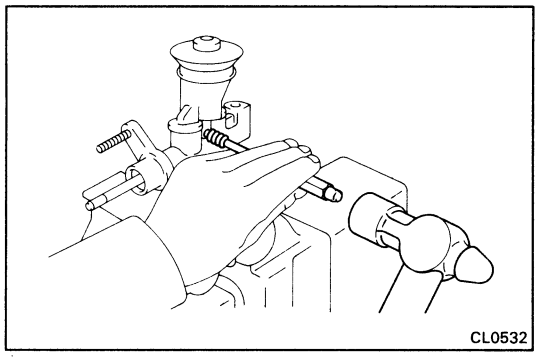
CL0532

DISASSEMBLY OF MASTER CYLINDER

1. **REMOVE RESERVOIR TANK**
   (a) Using a pin punch and a hammer, drive out the slotted spring pin.
   (b) Remove reservoir tank and grommet.

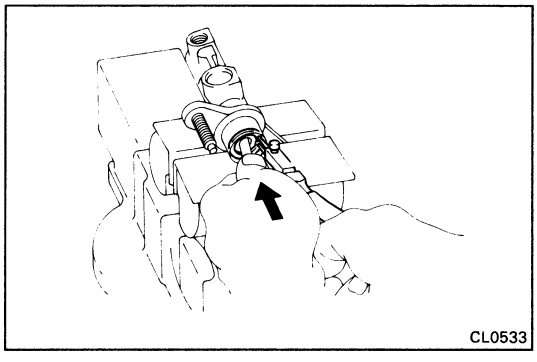
CL0533

2. **REMOVE PUSH ROD**
   (a) Pull back the boot and, using snap ring pliers, remove the snap ring.
   (b) Pull out the push rod and washer.
   (c) Remove the piston from the cylinder.

INSPECTION OF MASTER CYLINDER

HINT: Clean the disassembled parts with compressed air.

1. **INSPECT MASTER CYLINDER BORE FOR SCORING OR CORROSION.**
   If a problem is found, clean or replace the cylinder.

2. **INSPECT PISTON AND CUPS FOR WEAR, SCORING, CRACKS OR SWELLING**
   If either one requires replacement, use the parts from the cylinder kit.

3. **INSPECT PUSH ROD FOR WEAR OR DAMAGE**
   If necessary, replace the push rod.

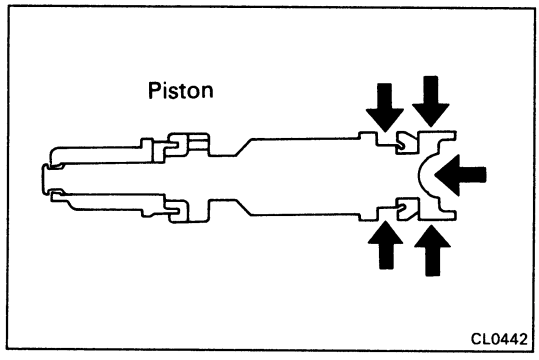

ASSEMBLY OF MASTER CYLINDER

1. **COAT PARTS WITH LITHIUM SOAP BASE GLYCOL GREASE, AS SHOWN**
2. **INSERT PISTON INTO CYLINDER**

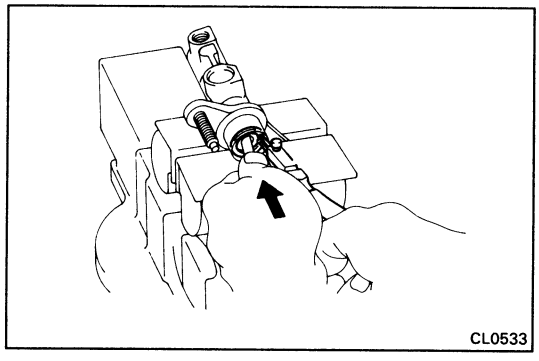

3. **INSTALL PUSH ROD ASSEMBLY WITH SNAP RING**

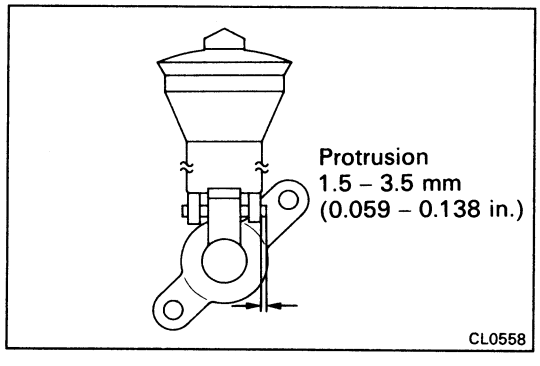

4. **INSTALL RESERVOIR TANK**
   (a) Install reservoir tank and new grommet.
   (b) Using a pin punch and a hammer, drive in the slotted spring pin.

INSTALLATION OF MASTER CYLINDER

(See page CL-5)

1. **INSTALL MASTER CYLINDER**
   Install the two mounting nuts, and torque them.
   Torque: 130 kg-cm (9 ft-lb, 13 N·m)
2. **CONNECT CLUTCH LINE UNION**
   Using SST, connect the union.
   SST 09751-36011
3. **INSTALL RETRACTOR CONTROL RELAY**
4. **CONNECT PUSH ROD AND INSTALL PIN**
   Install the clip in the push rod pin.
5. **BLEED SYSTEM AND ADJUST CLUTCH PEDAL**
   (See page CL-4)

CLUTCH RELEASE CYLINDER

COMPONENTS

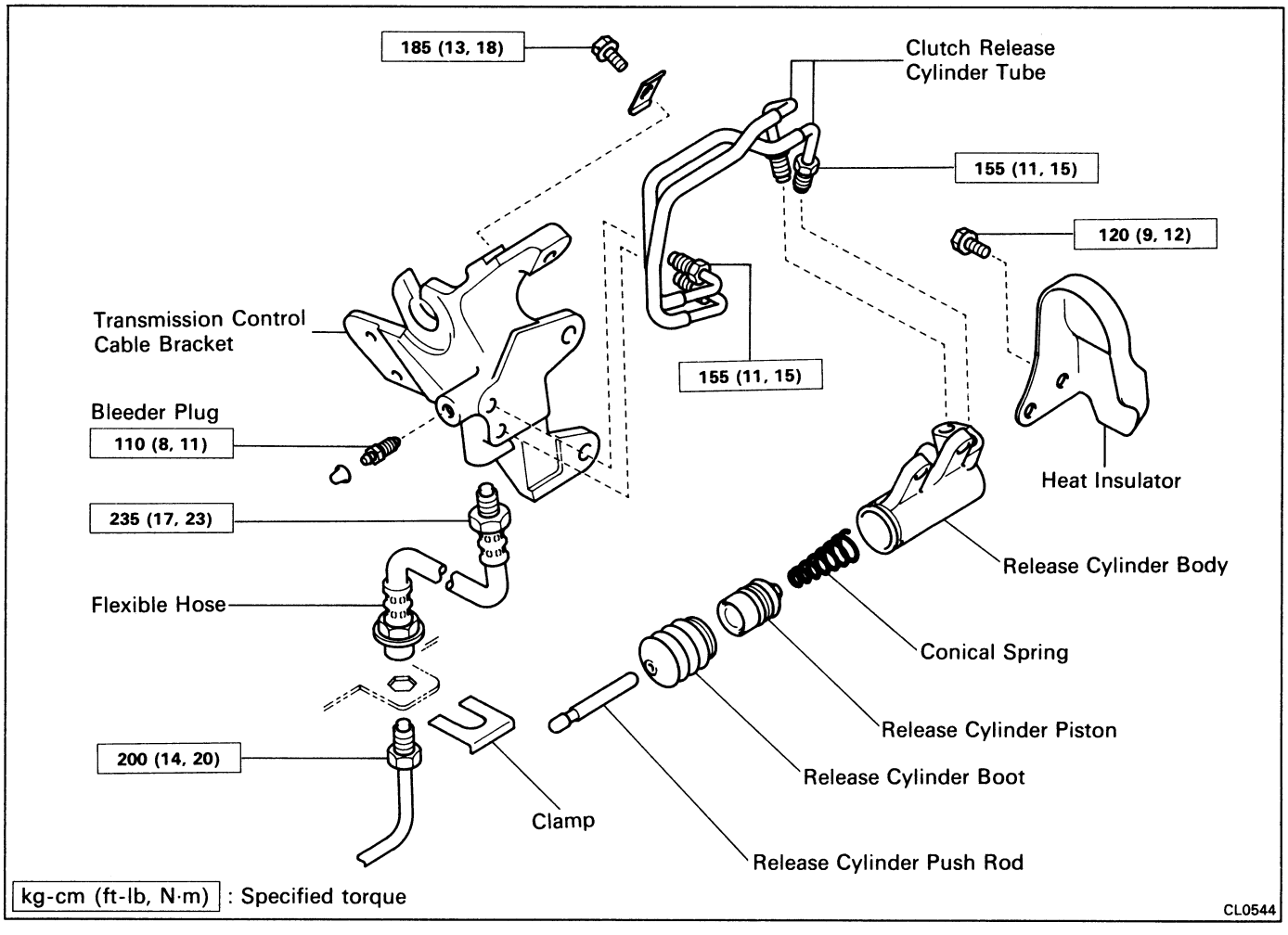

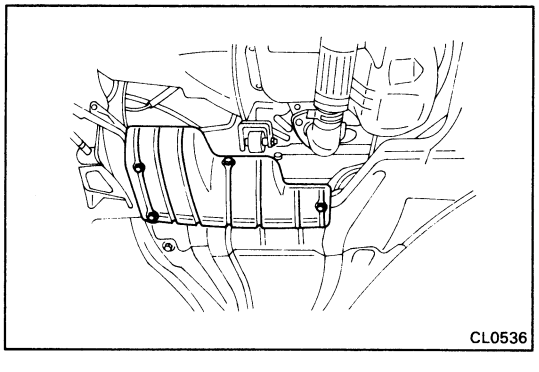

REMOVAL OF RELEASE CYLINDER

1. REMOVE NO.1 ENGINE UNDER COVER

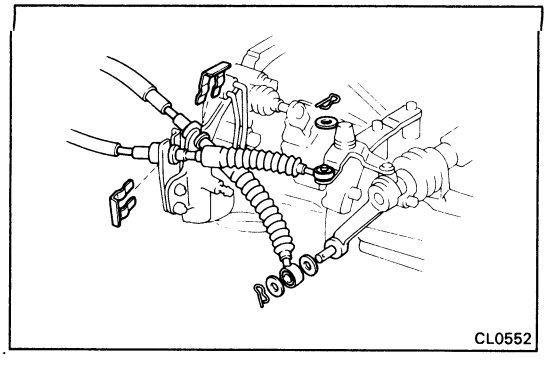

2. DISCONNECT CONTROL CABLE

(a) Remove the clip and washers.

(b) Remove the retainer from the cable.

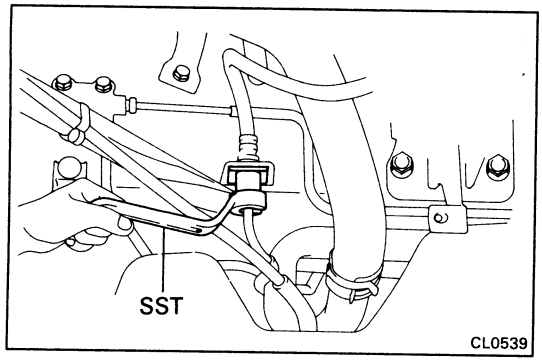

3. **DISCONNECT CLUTCH LINE UNION**

(a) Using SST, disconnect the union. Use a container to catch the brake fluid.

SST 09751-36011

(b) Remove the retainer

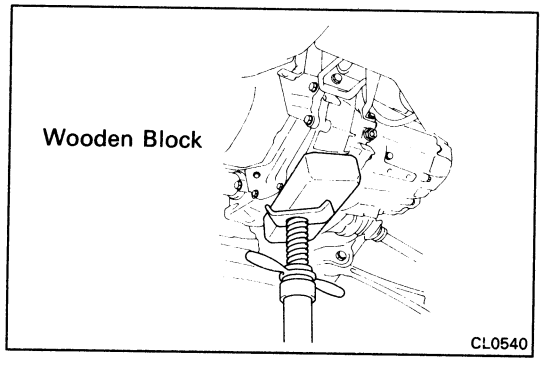

4. **SUPPORT ENGINE AND TRANSMISSION**

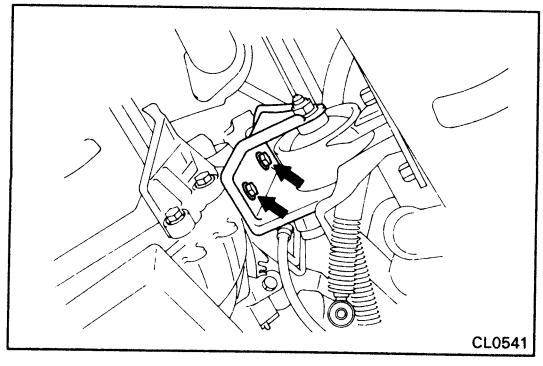

5. **REMOVE ENGINE FRONT MOUNTING BRACKET SET BOLTS**

Remove the two bolts from engine side.

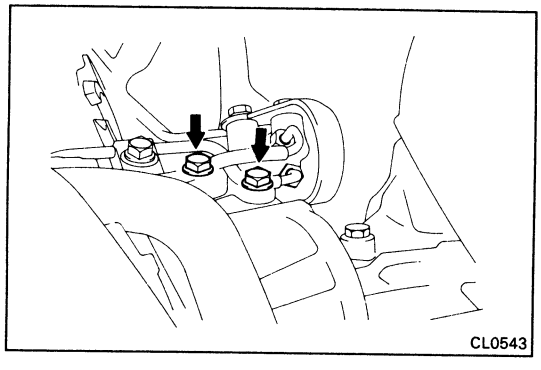

6. **REMOVE BOLT AND PULL OUT RELEASE CYLINDER ASSEMBLY**

DISASSEMBLY OF RELEASE CYLINDER

1. **PULL OUT PUSH ROD**

2. **REMOVE BOOT**

3. **REMOVE PISTON**

Using compressed air, remove the piston and spring from the cylinder.

INSPECTION OF RELEASE CYLINDER

HINT: Clean the disassembled parts with compressed air.

1. **INSPECT RELEASE CYLINDER BORE FOR SCORING OR CORROSION**

   If a problem is found, clean or replace the cylinder.

2. **INSPECT PISTON AND CUPS FOR WEAR, SCORING, CRACKS OR SWELLING**

   If either one requires replacement, use the parts from the cylinder kit.

3. **INSPECT PUSH ROD FOR WEAR OR DAMAGE**

   If necessary, replace the push rod.

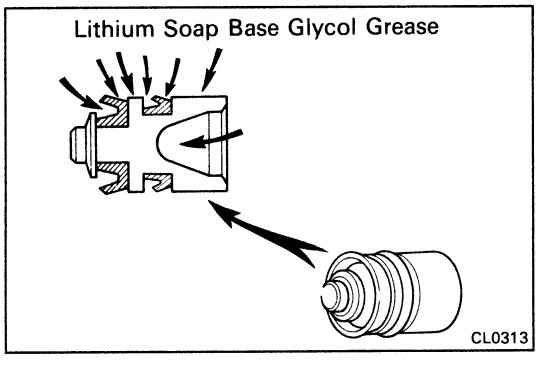

ASSEMBLY OF RELEASE CYLINDER

(See page CL-8)

1. **COAT PISTON WITH LITHIUM SOAP BASE GLYCOL GREASE, AS SHOWN**

2. **INSTALL PISTON**

3. **INSTALL BOOT AND INSERT PUSH ROD**

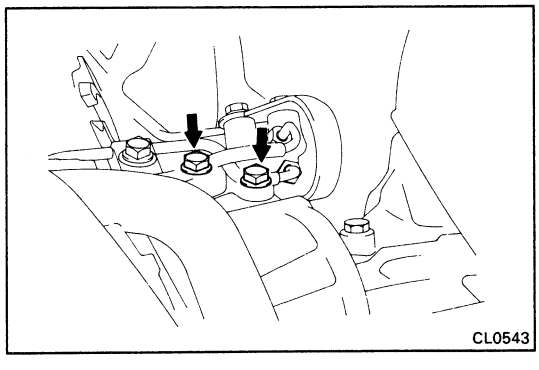

INSTALLATION OF RELEASE CYLINDER

(See page CL-8)

1. **INSTALL RELEASE CYLINDER**

   Torque: 120 kg-cm (9 ft-lb, 12 N·m)

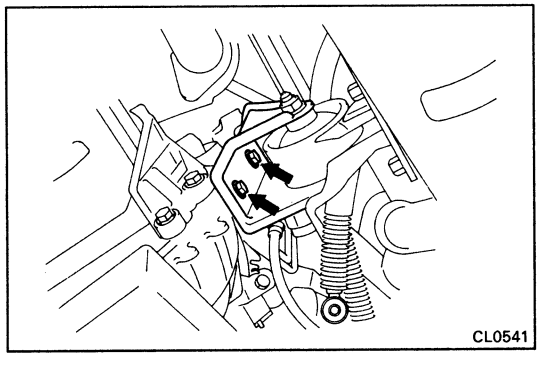

2. **INSTALL ENGINE FRONT MOUNTING BRACKET SET BOLTS**

   Torque: 790 kg-cm (57 ft-lb, 77 N·m)

3. **REMOVE SUPPORTS FOR ENGINE AND TRANSAXLE**

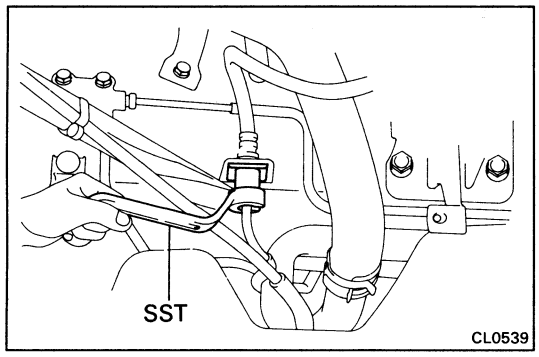

4. **CONNECT CLUTCH LINE UNION**
   (a) Using SST, connect the union.
   SST 09751-36011
   (b) Install the retainer.

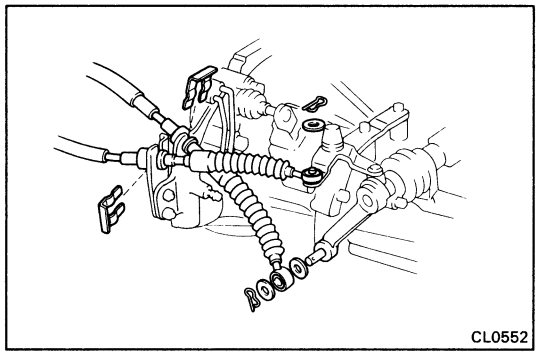

5. **CONNECT CONTROL CABLE**
   (a) Install the cable and retainer.
   (b) Install the washers and clip.

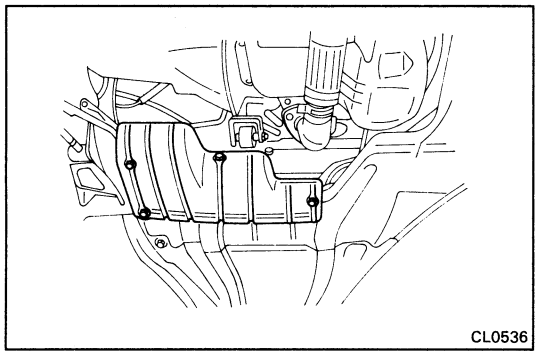

6. **INSTALL NO.1 ENGINE UNDER COVER**

7. **BLEED CLUTCH SYSTEM**
   (See page CL-4)

CLUTCH UNIT

COMPONENTS

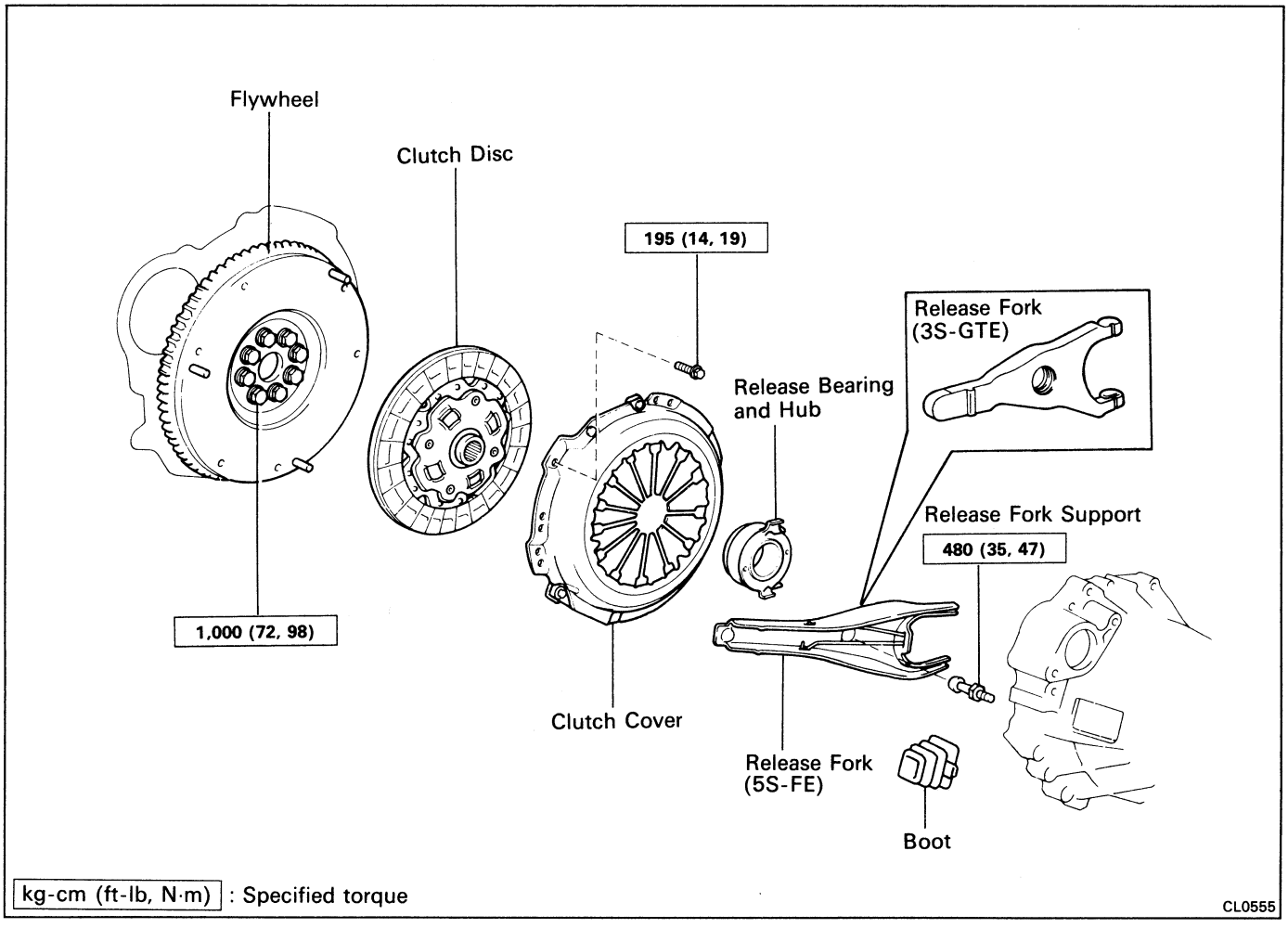

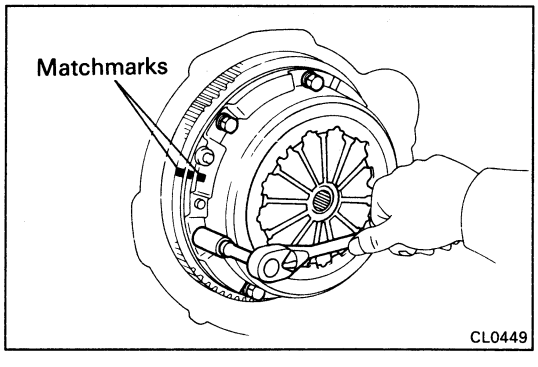

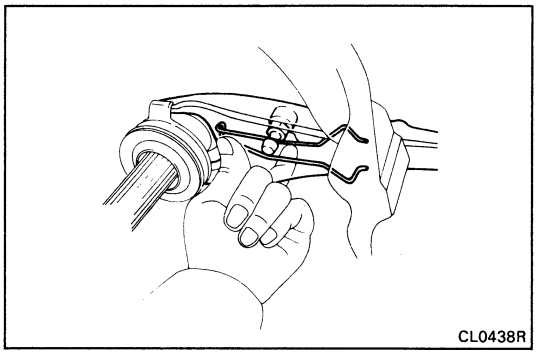

REMOVAL OF CLUTCH UNIT

1. **REMOVE TRANSAXLE (See page MT-5)**

2. **REMOVE CLUTCH COVER AND DISC**
   (a) Put matchmarks on the clutch cover and flywheel.
   (b) Loosen the set bolts one turn at a time until spring tension is released.
   (c) Remove the set bolts and pull off the clutch cover and disc.

3. **REMOVE BEARING, HUB AND FORK FROM TRANSAXLE**
   (a) Remove the retaining clip, pull off the bearing.
   (b) Remove the fork and boot.

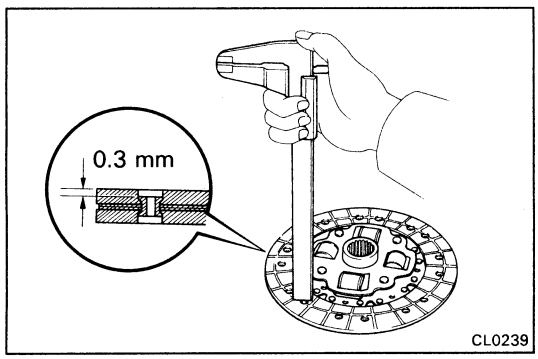

INSPECTION OF CLUTCH PARTS

1. INSPECT CLUTCH DISC FOR WEAR DAMAGE

Using calipers, measure the rivet head depth.

Minimum rivet depth: 0.3 mm (0.012 in.)

If a problem is found, repair or replace the clutch disc.

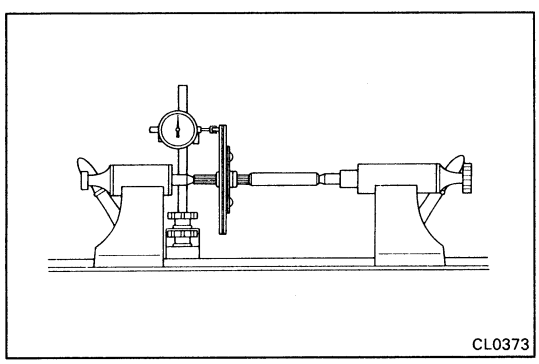

2. INSPECT CLUTCH DISC RUNOUT

Using a dial indicator, check the disc runout.

Maximum runout: 0.8 mm (0.031 in.)

If runout is excessive, replace the disc.

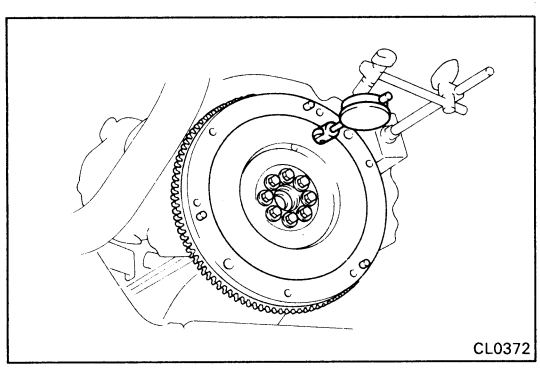

3. INSPECT FLYWHEEL RUNOUT

Using a dial indicator, check the flywheel runout.

Maximum runout: 0.1 mm (0.004 in.)

If runout is excessive, repair or replace flywheel.

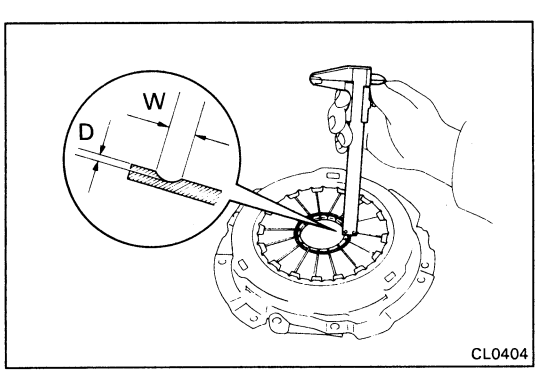

4. INSPECT DIAPHRAGM SPRING FOR WEAR

Using calipers, measure the diaphragm spring for depth and width of wear.

Maximum: Depth 0.6 mm (0.024 in.)
Width 5.0 mm (0.197 in.)

If necessary, replace the clutch cover.

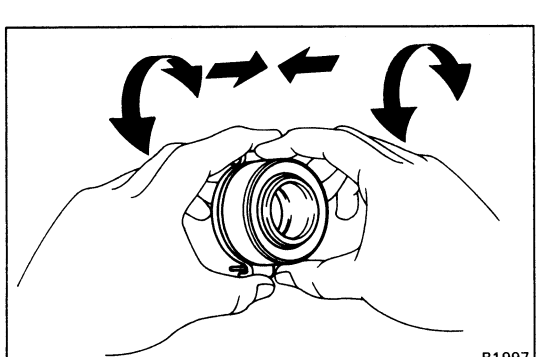

5. INSPECT RELEASE BEARING

Turn the bearing by hand while applying force in the rotation direction.

If the bearing sticks or has much resistance, replace the release bearing.

HINT: The bearing is permanently lubricated and requires no cleaning or lubrication.

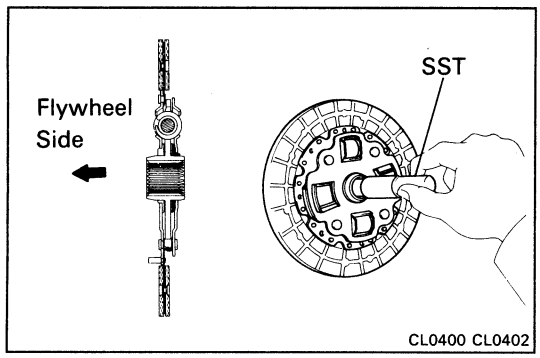

INSTALLATION OF CLUTCH UNIT

(See page CL-12)

1. INSTALL DISC ON FLYWHEEL

Using SST, install the disc on the flywheel.

SST 09301-32010 (5S-FE)
09301-17010 (3S-GTE)

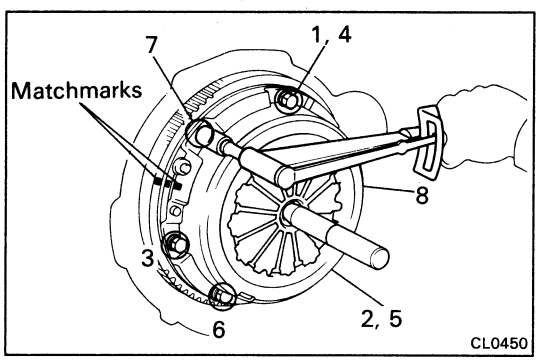

2. INSTALL CLUTCH COVER

(a) Align the matchmarks on the clutch cover and flywheel.

(b) Torque the bolts on the clutch cover in the order shown.

Torque: 195 kg-cm (14 ft-lb, 19 N·m)

HINT: Temporarily tighten the No.1 and No.2 bolts.

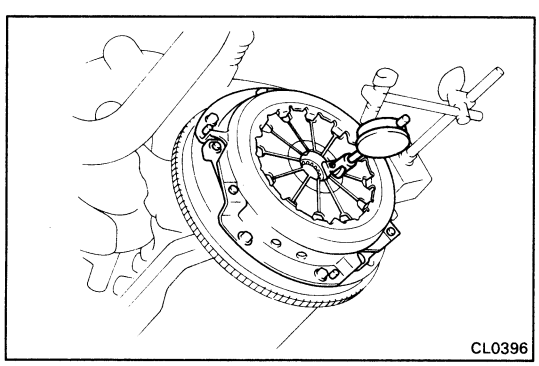

3. CHECK DIAPHRAGM SPRING TIP ALIGNMENT

Using a dial indicator with roller instrument, check the diaphragm spring tip alignment.

Maximum non-alignment: 0.5 mm (0.020 in.)

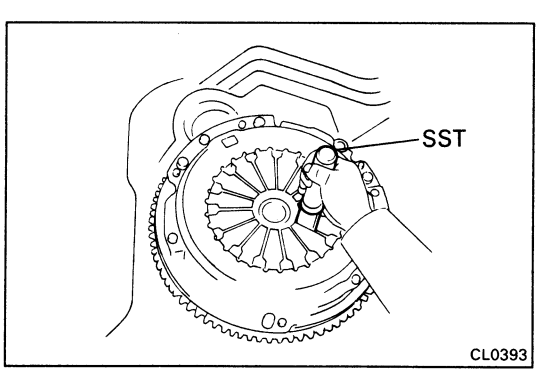

If alignment is not as specified, using SST, adjust the diaphragm spring tip alignment.

SST 09333-00013

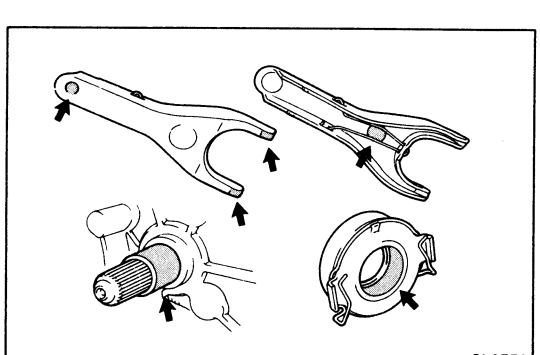

4. APPLY MOLYBDENUM DISULPHIDE LITHIUM BASE GREASE (NLGI NO.2) OR MP GREASE

Apply molybdenum disulphide lithium base grease to the following parts:

- Release fork and hub contact point
- Release fork and push rod contact point
- Release fork pivot point
- Release bearing retainer
- Release bearing hub.

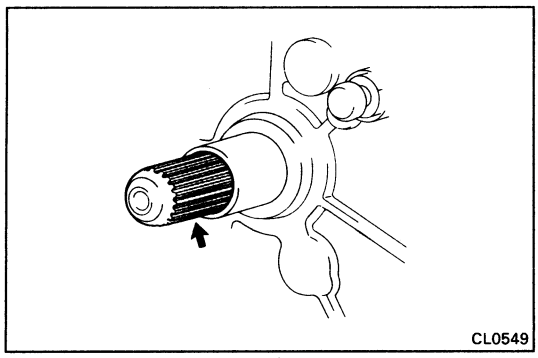
CL0549

5. APPLY SPLINE GREASE TO INPUT SHAFT SPLINE

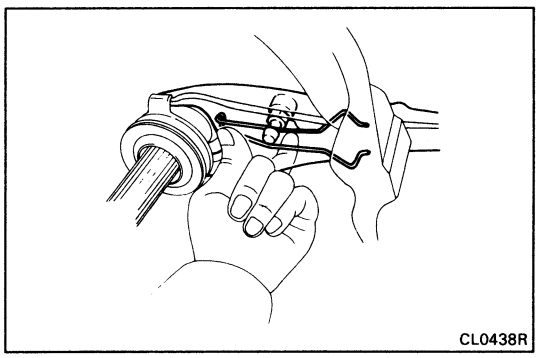
CL0438R

6. INSTALL BOOT, FORK, HUB AND BEARING ON TRANSAXLE

7. INSTALL TRANSAXLE
(See page MT-5)

MANUAL TRANSAXLE

	Page
DESCRIPTION	MT-2
PRECAUTIONS	MT-4
TROUBLESHOOTING	MT-4
REMOVAL AND INSTALLATION OF TRANSAXLE	MT-5
(S54 TRANSAXLE/SW21 series)	
REMOVAL OF COMPONENT PARTS	MT-7
COMPONENT PARTS	MT-21
Input Shaft Assembly	MT-21
Output Shaft Assembly	MT-27
Shift and Select Lever Assembly	MT-34
Differential	MT-37
INSTALLATION OF COMPONENT PARTS	MT-47
(E153 TRANSAXLE/SW20 series)	
REMOVAL OF COMPONENT PARTS	MT-57
COMPONENT PARTS	MT-73
Input Shaft Assembly	MT-73
Output Shaft Assembly	MT-79
Oil Pump	MT-85
Shift and Select Lever Shaft	MT-90
Differential	MT-94
INSTALLATION OF COMPONENT PARTS	MT-104
SHIFT LEVER AND CONTROL CABLE	MT-116

DESCRIPTION

General

- **Transaxle types S54 and E153 are constant mesh synchronizers for forward gears, and a sliding mesh reverse gear.**
- **The input shaft is composed of the 1st and 2nd speed gears and the reverse drive gear, and the output shaft is composed of the drive gear (for use with the ring gear).**
- **The oil used in the transaxles are as follows:**

S51 ..... ATF type DEXRON® II

E153 ..... Transaxle oil E50 (08885 – 80206) or equivalent

Sectional View

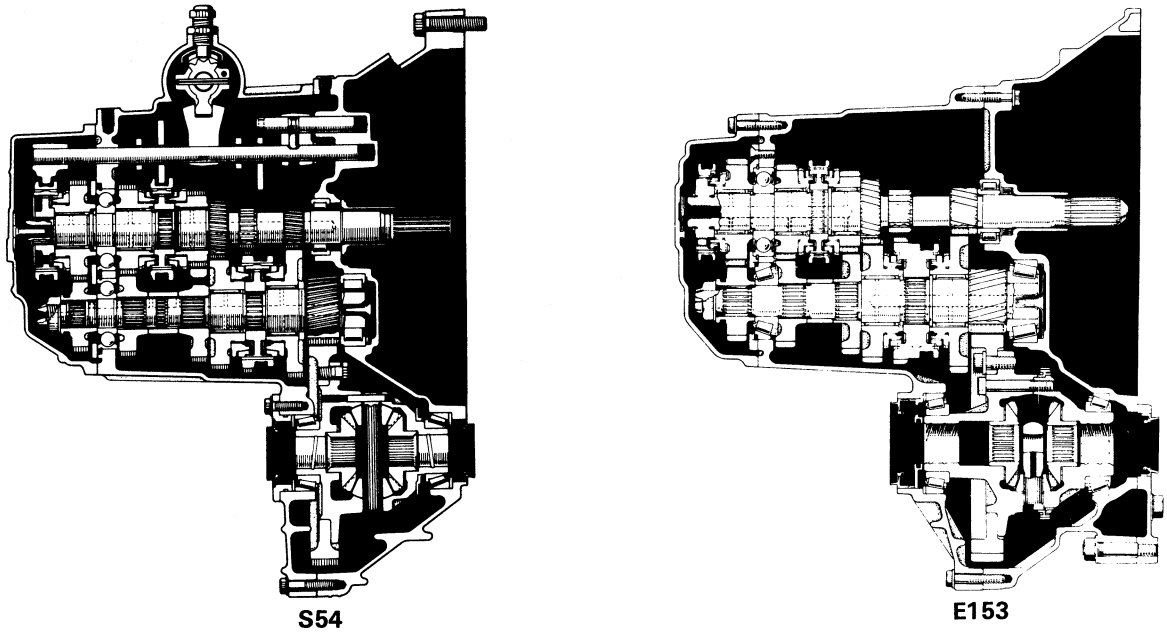

CD0007 MT0718

General Specifications

Items \ Type of Engine \ Type of Transmission		5S-FE / S54	3S-GTE / E153
Gear Ratios	1st Gear	3.285	3.230
	2nd Gear	1.960	1.913
	3rd Gear	1.322	1.258
	4th Gear	1.028	0.918
	5th Gear	0.820	0.731
	Reverse Gear	3.153	3.545
Differential Gear Ratio		4.176	4.285
Oil Type		ATF DEXRON® II	Transaxle oil E50 or equivalent
Oil Capacity	liter (US qts, Imp. qts)	2.6 (2.7, 2.3)	4.2 (4.4, 3.7)

Function of Component Parts

S54 and E153 Transaxles

- **The illustrations below show the engagements of transaxle gears.**

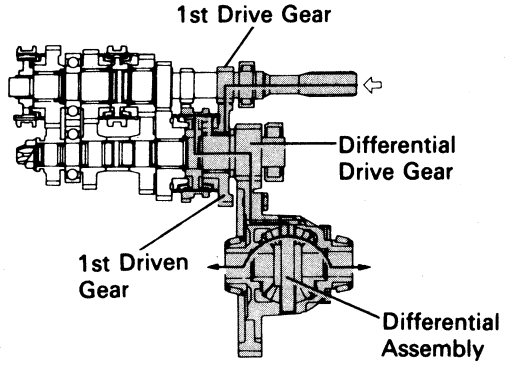

1st

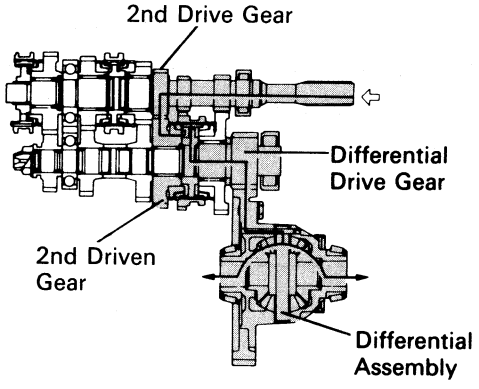

2nd

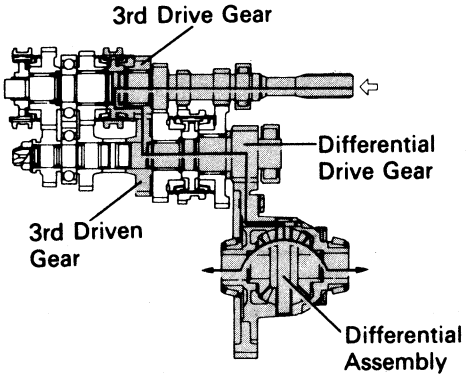

3rd

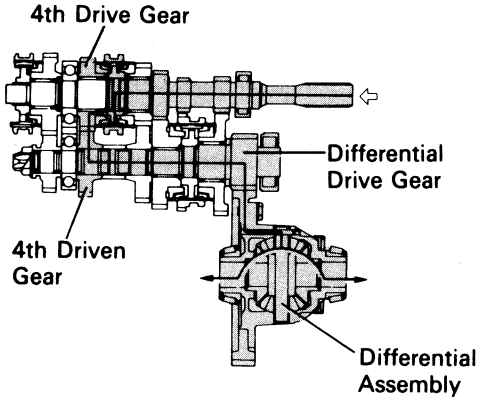

4th

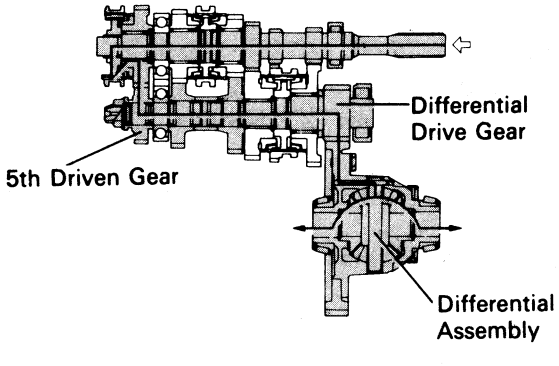

5th

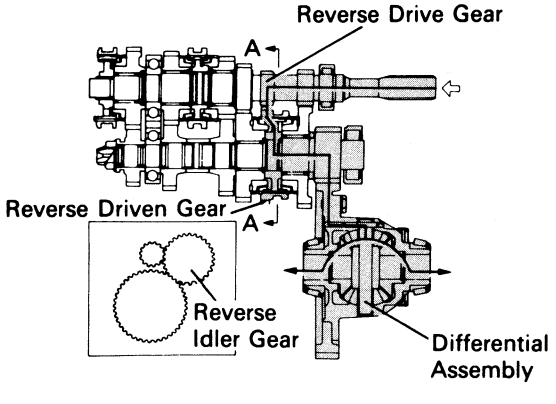

Rev.

Z9913

PRECAUTIONS

When working with FIPG material, you must be observe the following.

- **Using a razor blade and gasket scraper, remove all the old packing (FIPG) material from the gasket surfaces.**
- **Thoroughly clean all components to remove all the loose material.**
- **Clean both sealing surfaces with a non-residue solvent.**
- **Apply the seal packing in approx. 1 mm (0.04 in.) bead along the sealing surface.**
- **Parts must be assembled within 10 minutes of application. Otherwise, the packing (FIPG) material must be removed and reapplied.**

TROUBLESHOOTING

Problem	Possible cause	Remedy	Page	
			S54	E153
Noise	Transmission or differential faulty	Disassemble and inspect transmission or differential	MT-7, MT-37	MT-57, MT-94
	Wrong oil grade	Replace oil	MT-4	←
	Oil level low	Add oil	MT-4	←
Oil leakage	Oil level too high	Drain oil	–	–
	Oil seal, O-ring or gasket worn or damaged	Replace oil seal, O-ring or gasket	MT-7	MT-57
Hard to shift or will not shift	Control cable faulty	Replace control cable	MT-116	←
	Transmission faulty	Disassemble and inspect transmission	MT-7	MT-57
Jumps out of gear	Transmission faulty	Disassemble and inspect transmission	MT-7	MT-57

HOW TO REPLACE OR CHECK OIL

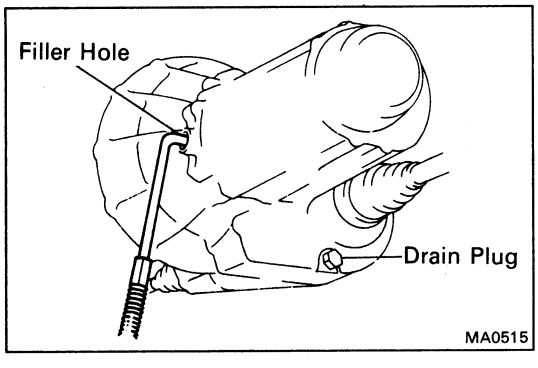

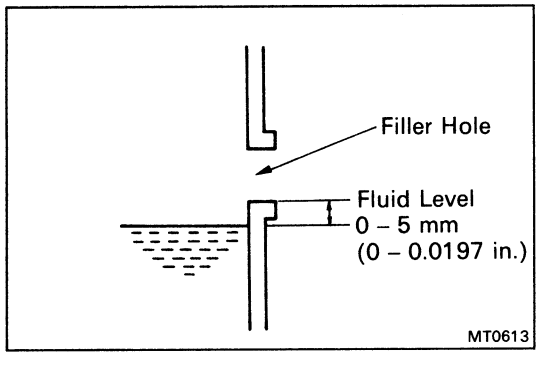

1. HOW TO REPLACE TRANSAXLE OIL

(a) Remove the drain plug and drain the oil.

(b) Reinstall drain plug securely.

Torque: 500 kg-cm (36 ft-lb, 49 N·m)

(c) Add new oil until it begins to run out of the filler hole.

(S54: 5S-FE)

ATF: DEXRON® II

Capacity: 2.6 liters (2.7 US qts, 2.3 Imp. qts)

(E153: 3S-GTE)

Oil: Transaxle oil E50 (08885-80206) or equivalent

Capacity: 4.2 liters (4.4 US qts, 3.7 Imp. qts)

2. HOW TO CHECK TRANSAXLE OIL

(a) Remove the filler plug and check transaxle oil level.

If the level is lower, add transaxle oil until it begins to run out of the filler hole.

(b) After checking, reinstall the filler plug securely.

Torque: 500 kg-cm (36 ft-lb, 49 N·m)

REMOVAL AND INSTALLATION OF TRANSAXLE

Remove and install the parts as shown.

HINT: (S54)

ATF type : DEXRON® II
Capacity : 2.6 liter (2.7 US qts, 2.3 Imp. qts)
(E153)
Oil : Transaxle oil E50 (08885-80206) or equivalent
Capacity : 4.2 liter (4.4 US qts, 3.7 Imp. qts)

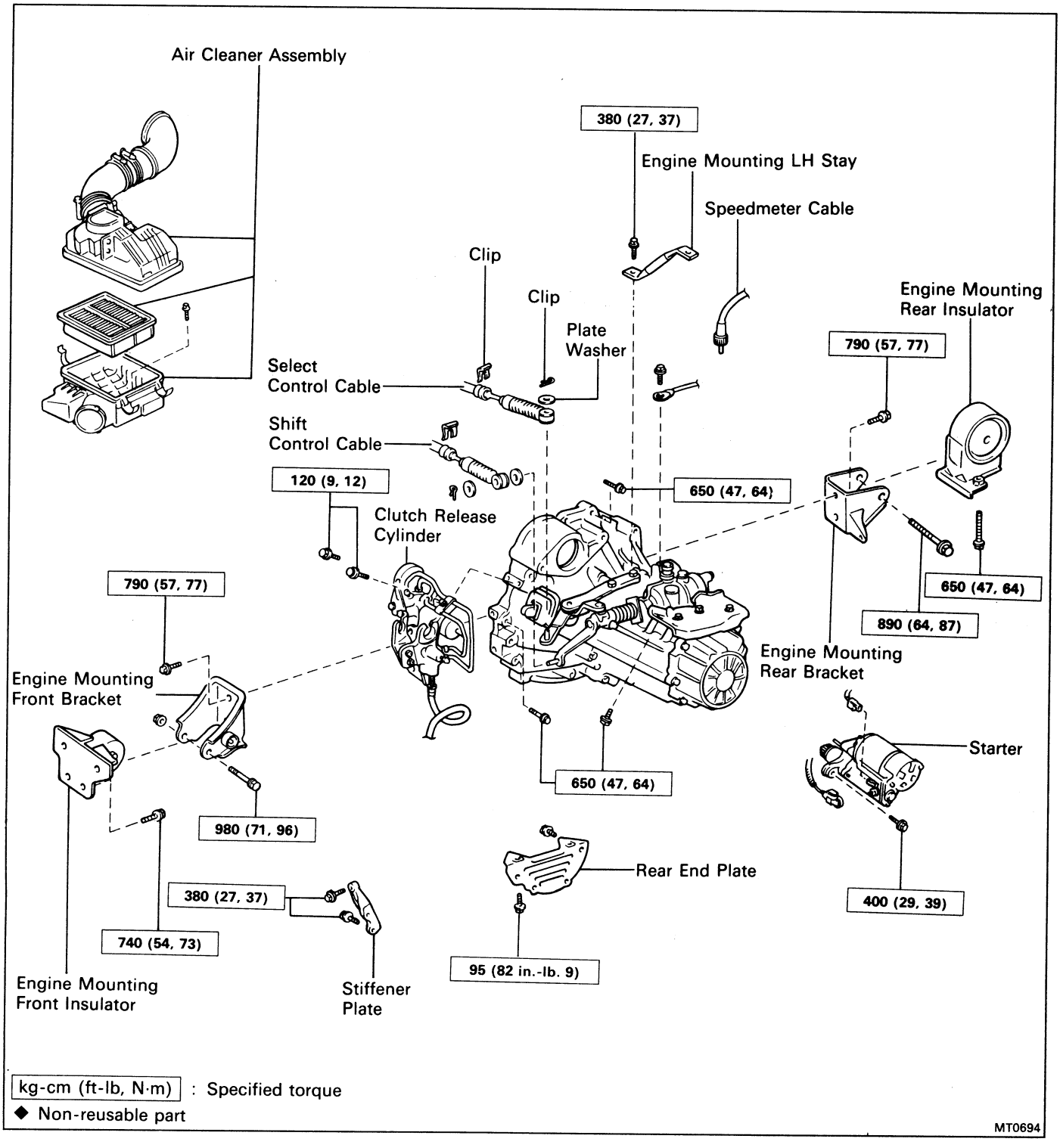

kg-cm (ft-lb, N·m) : Specified torque
◆ Non-reusable part

MT0694

REMOVAL AND INSTALLATION OF TRANSAXLE (Cont'd)

Remove and install the parts as shown.

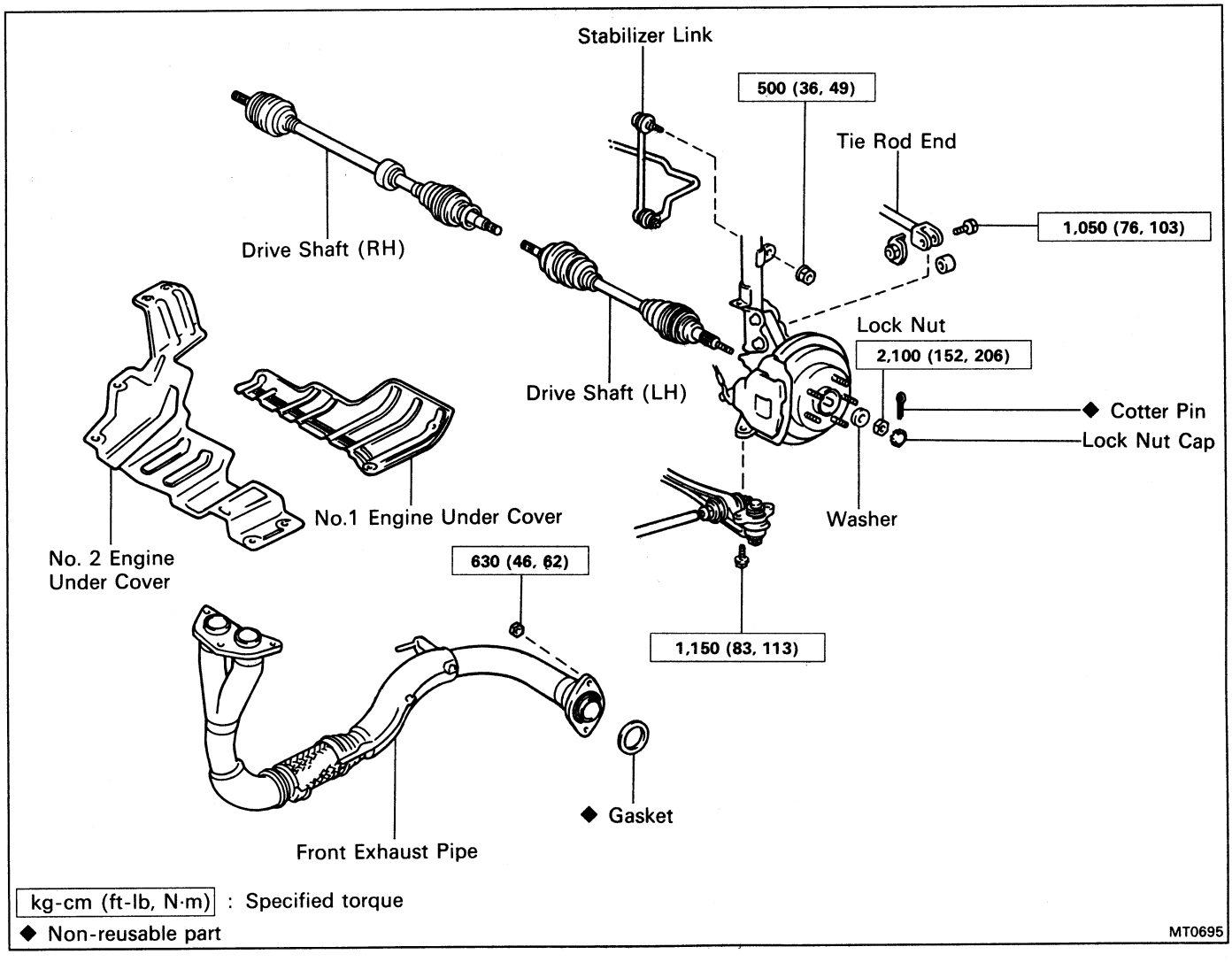

(S54 TRANSAXLE)
REMOVAL OF COMPONENT PARTS
COMPONENTS

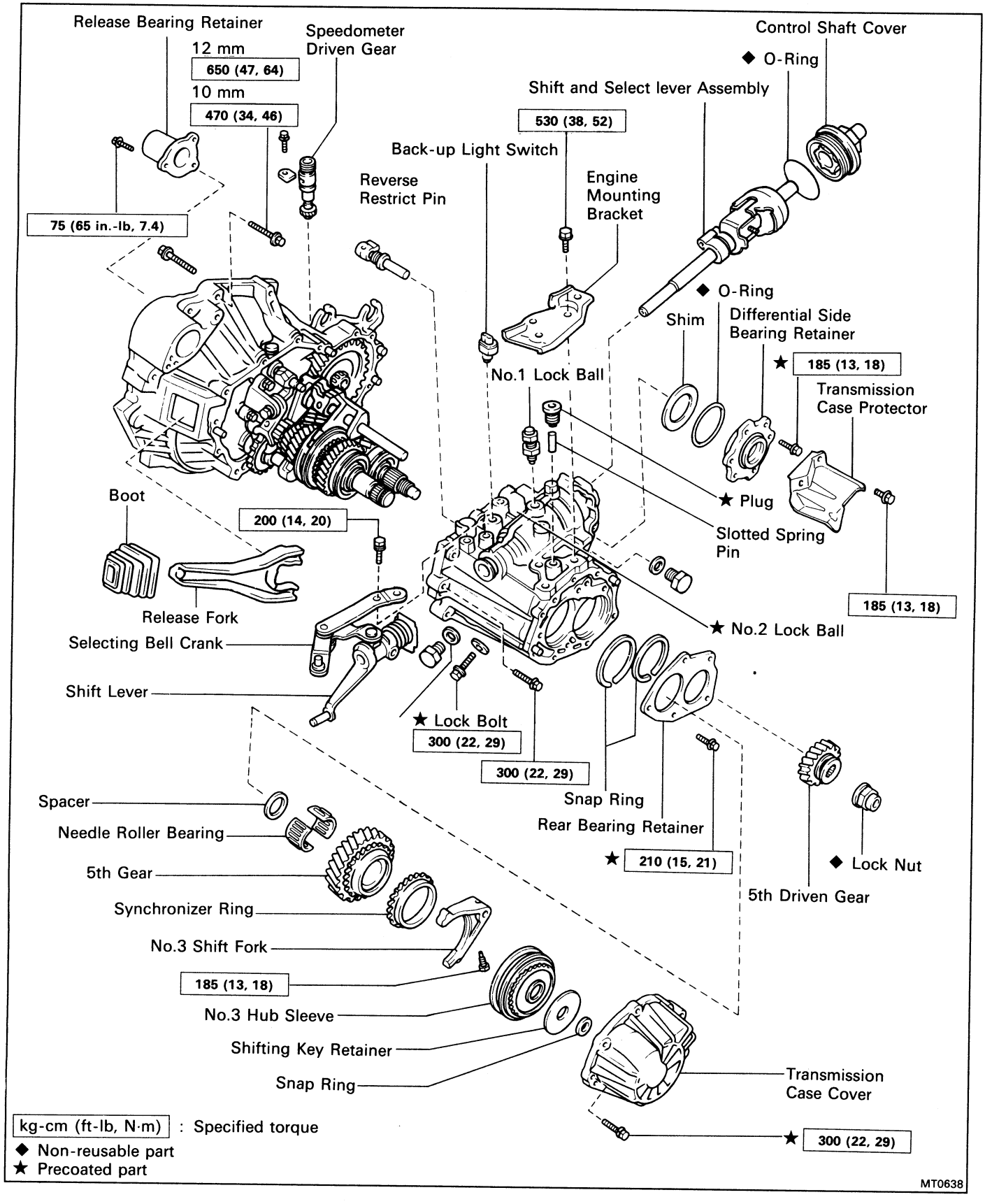

COMPONENTS (Cont'd)

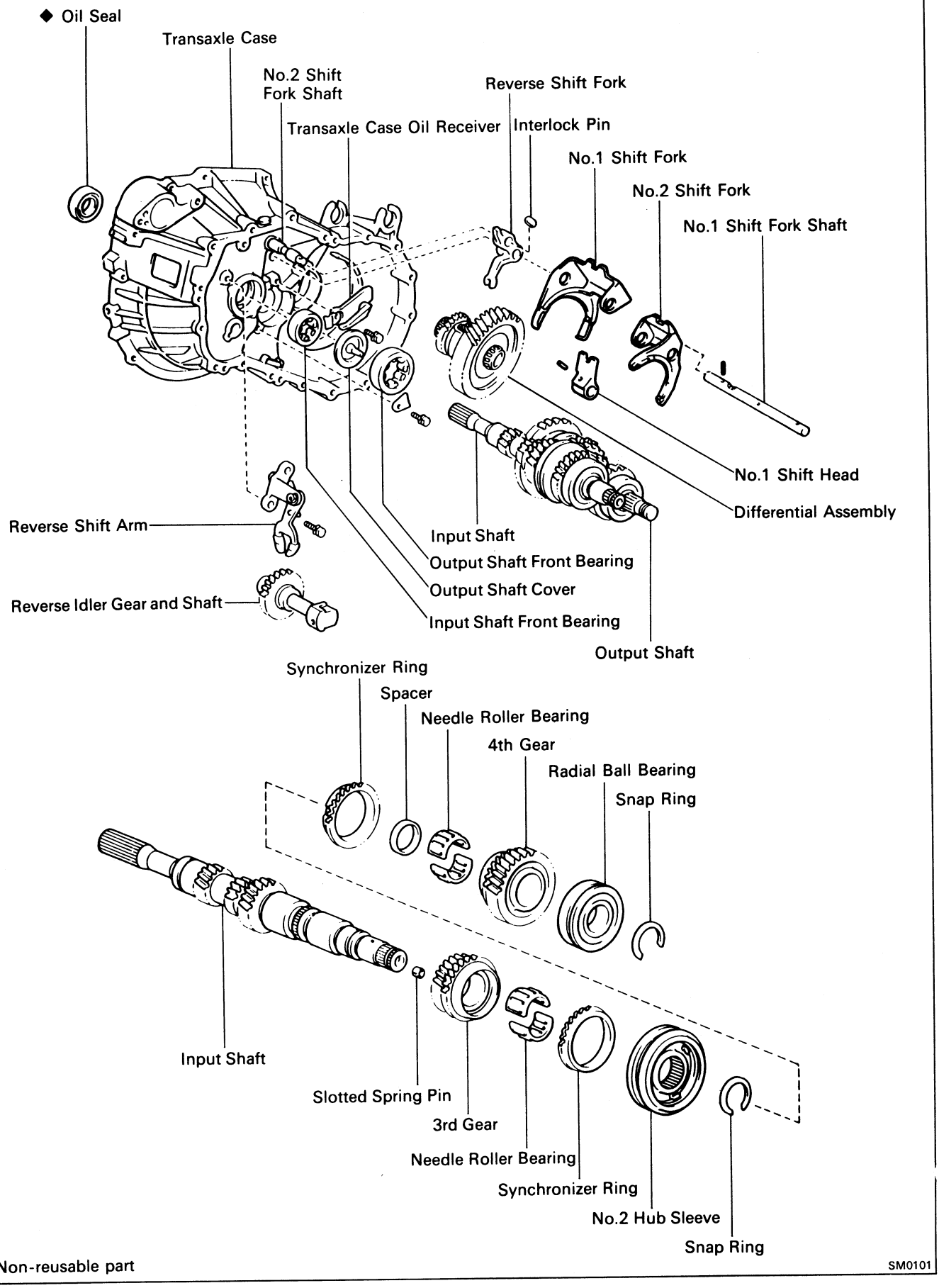

◆ Non-reusable part

SM0101

COMPONENTS (Cont'd)

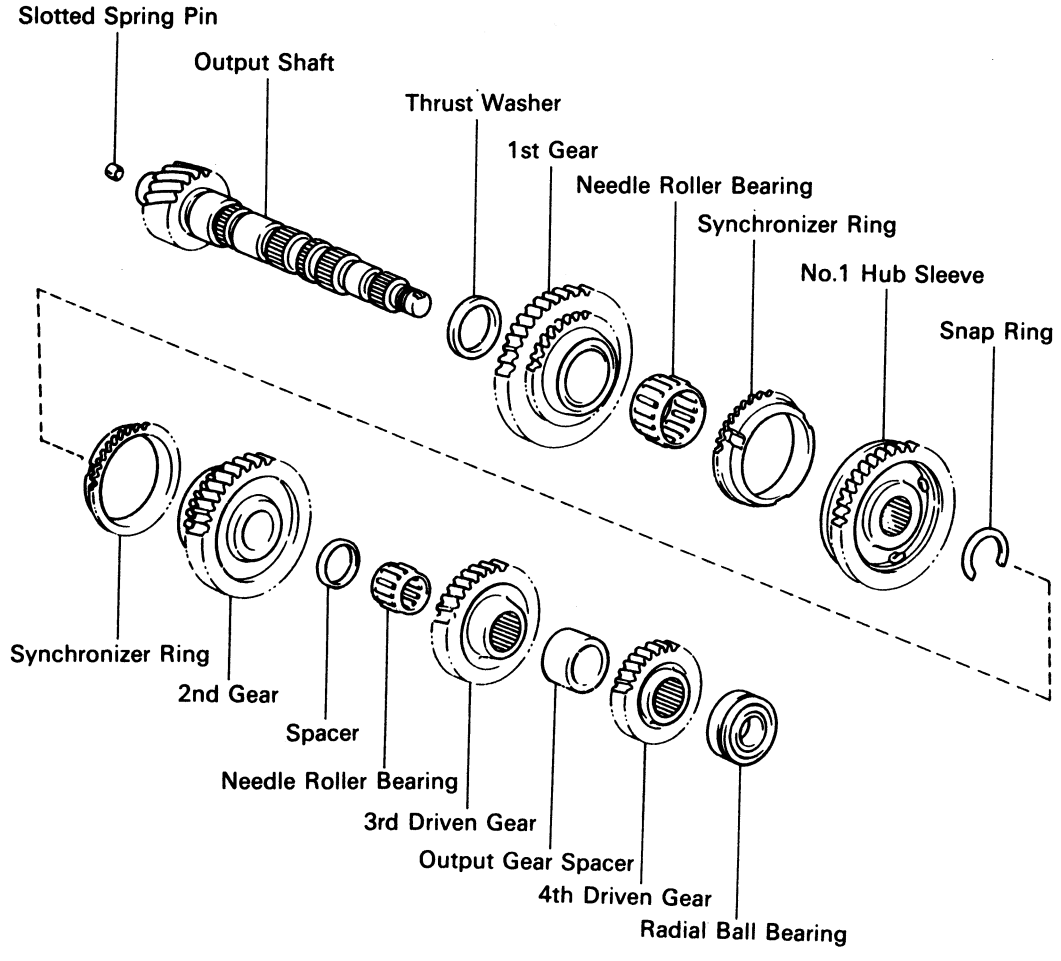

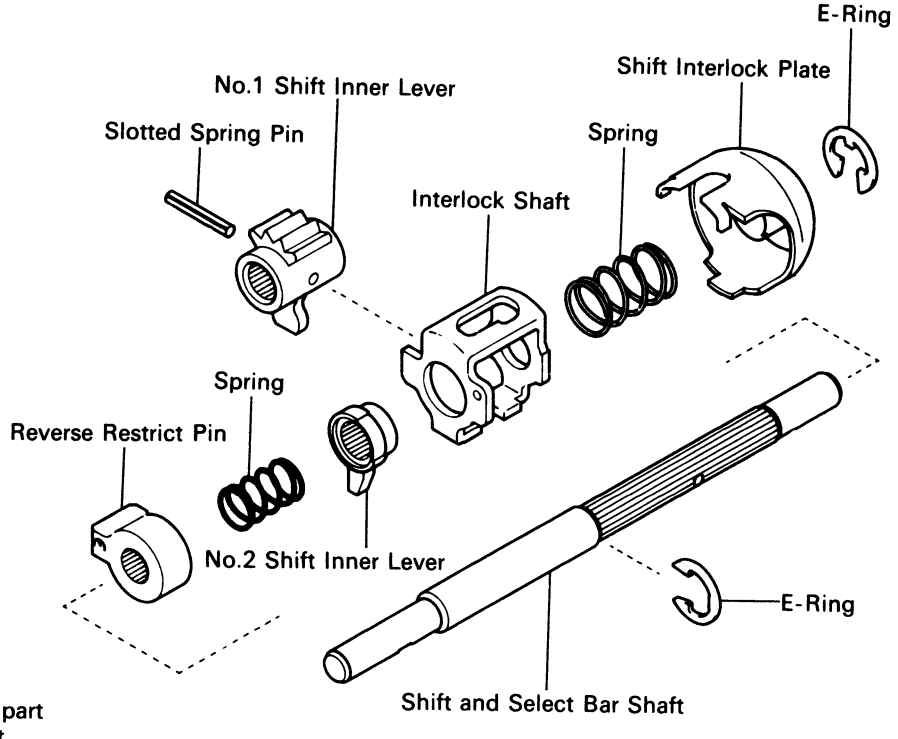

◆ Non-reusable part
★ Precoated part

SM0040
SM0147

REMOVAL OF COMPONENT PARTS

(See pages MT-7 to 9)

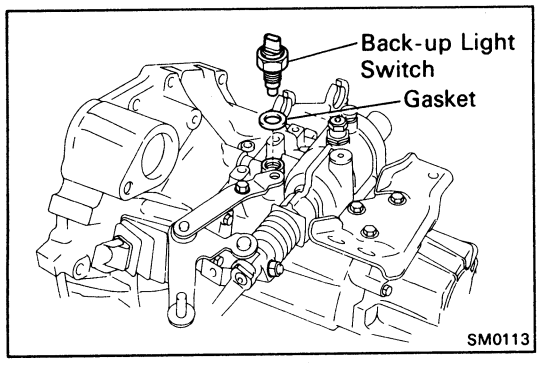

1. **REMOVE RELEASE FORK AND BEARING**

2. **REMOVE BACK-UP LIGHT SWITCH**

   Remove the back-up light switch and gasket.

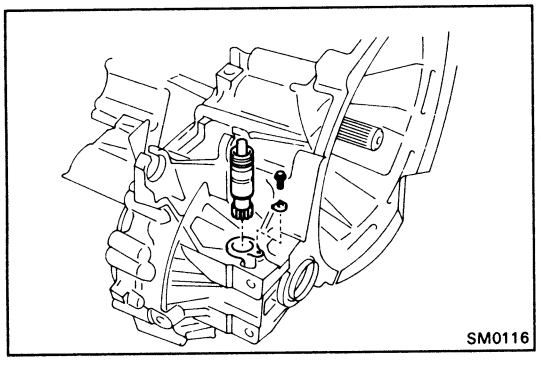

3. **REMOVE SPEEDOMETER DRIVEN GEAR**

   (a) Remove the retaining bolt and plate.

   (b) Pull out the speedometer driven gear.

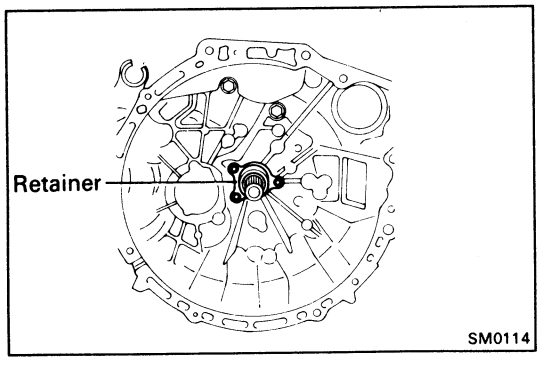

4. **REMOVE RELEASE BEARING RETAINER**

   Remove the three bolts.

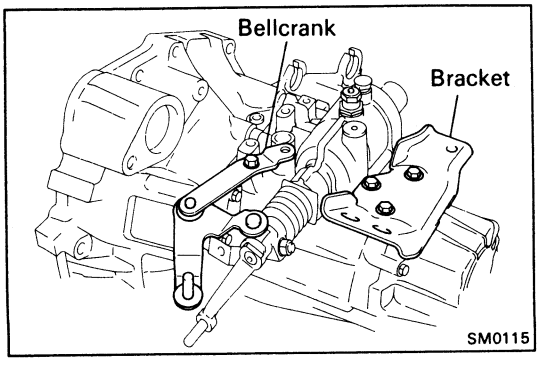

5. **REMOVE SELECTING BELLCRANK ASSEMBLY AND ENGINE MOUNTING BRACKET**

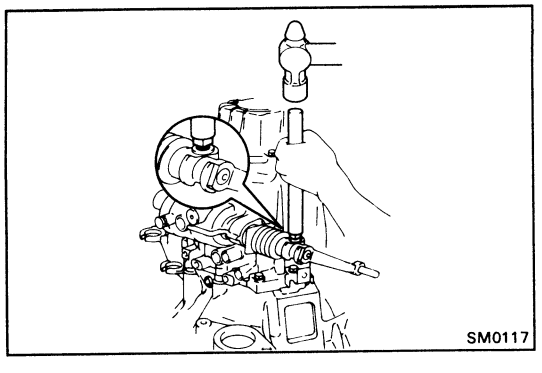

6. **REMOVE SHIFT LEVER**

   (a) Loosen the lock nut as far as the tip of the lock pin.

   (b) Using a brass bar and hammer, tap out the lock pin.

   (c) Pull out the shift lever with dust boot from shift and select lever shaft.

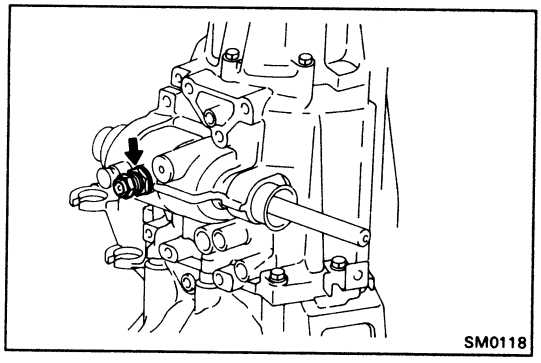

7. REMOVE NO.1 AND NO.2 LOCK BALL ASSEMBLIES

(a) Loosen the lock nut and remove the No.1 lock ball.

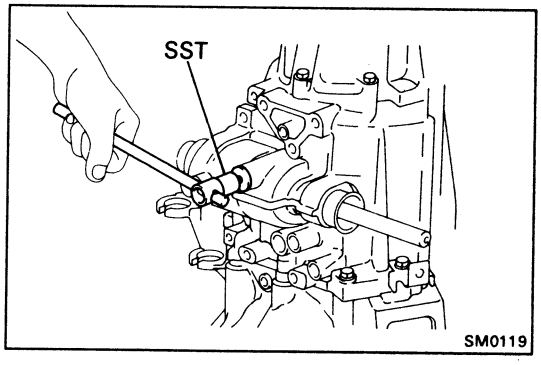

(b) Using SST, remove the No.2 lock ball.
SST 09313-30021

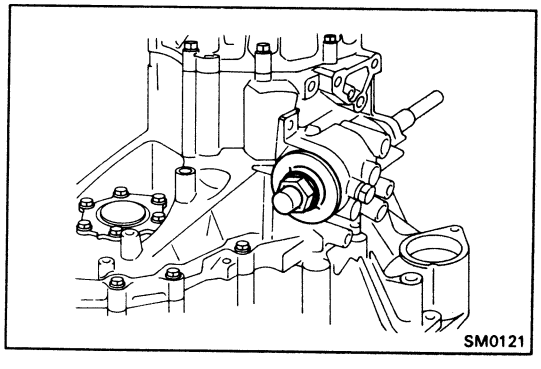

8. REMOVE SHIFT AND SELECT LEVER SHAFT ASSEMBLY

(a) Remove the control shaft cover.

(b) Remove the O-ring from control shaft cover.

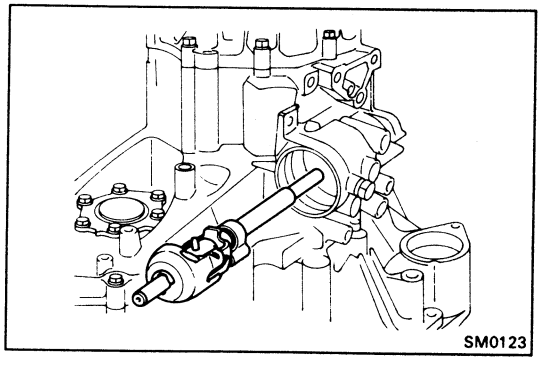

(c) Pull out the shift and select lever shaft assembly.

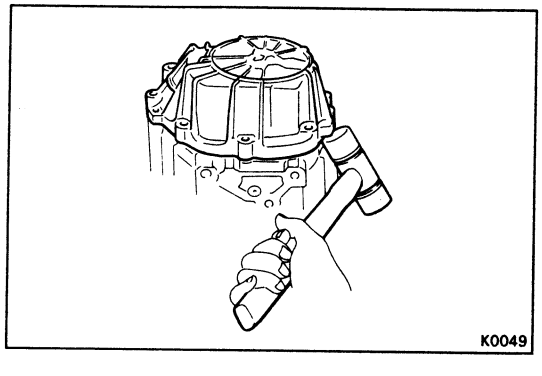

9. REMOVE TRANSMISSION CASE COVER

(a) Remove the eight bolts.

(b) Tap on the circumference of the transmission case cover with a plastic hammer to remove the transmission case cover.

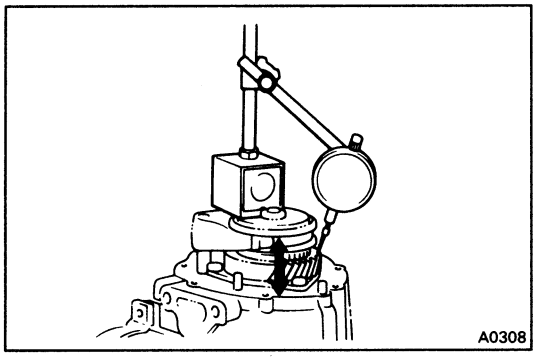

10. MEASURE FIFTH GEAR THRUST CLEARANCE

Using a dial indicator, measure the thrust clearance.

Standard clearance: 0.20 – 0.40 mm (0.0079 – 0.0157 in.)
Maximum clearance: 0.45 mm (0.0177 in.)

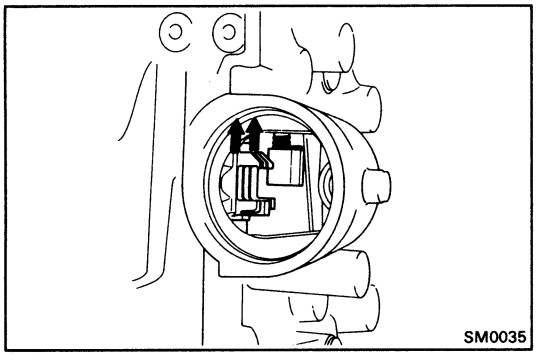

11. REMOVE OUTPUT SHAFT LOCK NUT

(a) Engage the gear double meshing.
(b) Unstake the nut.

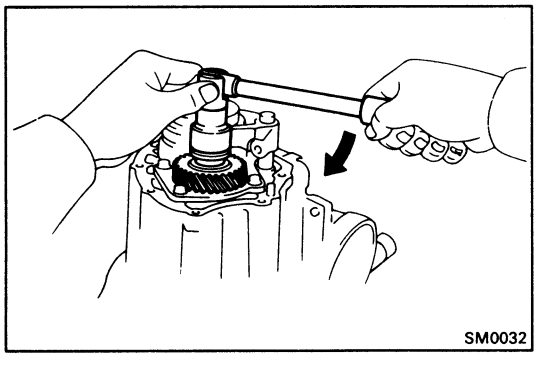

(c) Remove the lock nut.
HINT: The lock nut has LH threads.
(d) Disengage the gear double meshing.

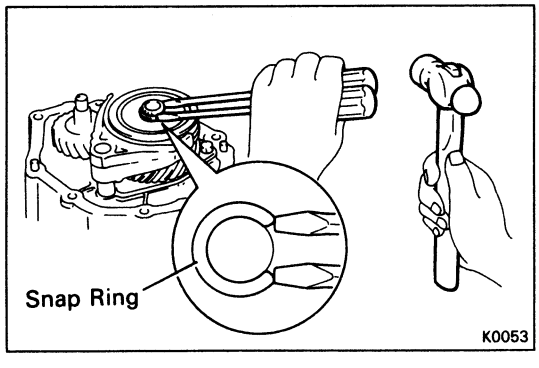

12. REMOVE SHIFTING KEY RETAINER

(a) Using two screwdrivers and a hammer, tap out the snap ring.
(b) Remove the shifting key retainer.

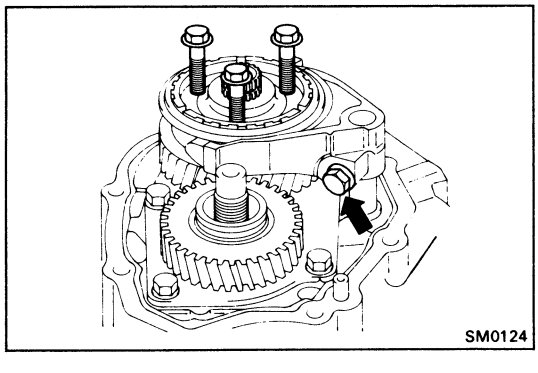

13. REMOVE NO. 3 HUB SLEEVE AND NO. 3 SHIFT FORK

(a) Remove the No. 3 shift fork set bolt.
(b) Using the three case cover bolts, tighten the three bolts a little at a time and remove No. 3 hub sleeve assembly.

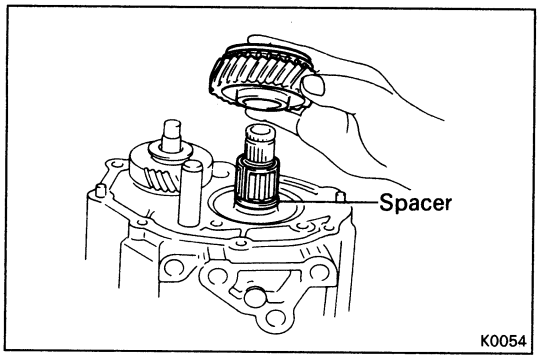

14. REMOVE FIFTH GEAR, SYNCHRONIZER RING, NEEDLE ROLLER BEARINGS AND SPACER

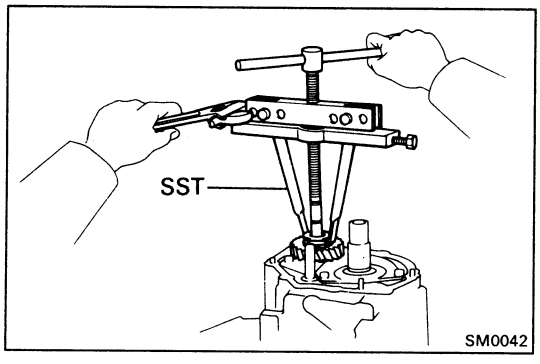

15. REMOVE FIFTH DRIVEN GEAR

Using SST, remove the fifth driven gear.
SST 09950-20017

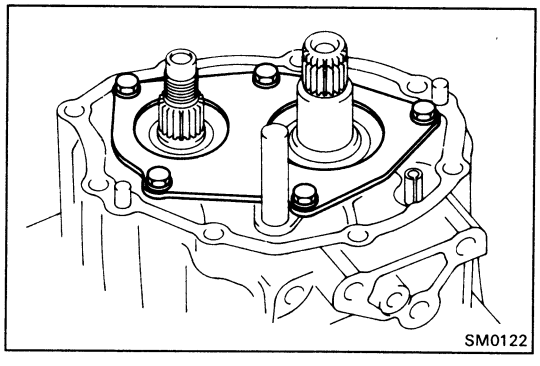

16. REMOVE REAR BEARING RETAINER

Remove the five bolts and bearing retainer.

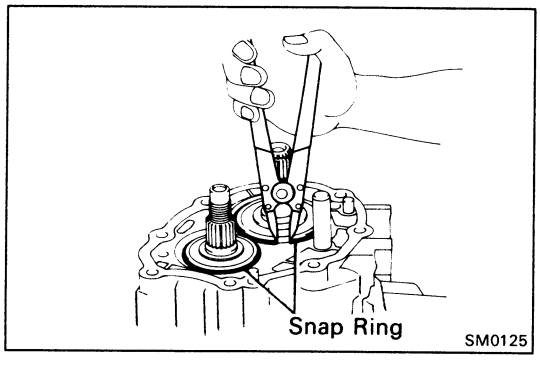

17. REMOVE SNAP RINGS

Using snap ring pliers, remove the two snap rings.

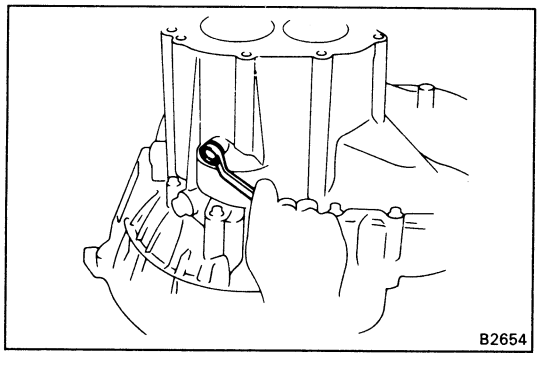

18. REMOVE REVERSE IDLER GEAR SHAFT LOCK BOLT

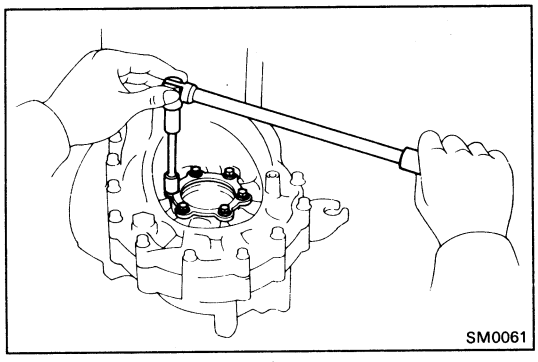

19. REMOVE DIFFERENTIAL SIDE BEARING RETAINER AND SHIM

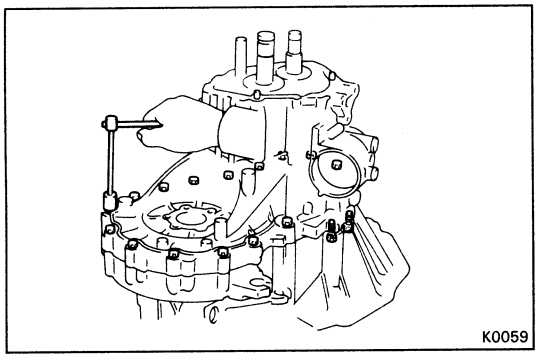

20. REMOVE TRANSMISSION CASE

Remove the seventeen bolts and tap off the case with plastic hammer.

HINT: Remove the two bolts from the transaxle case side.

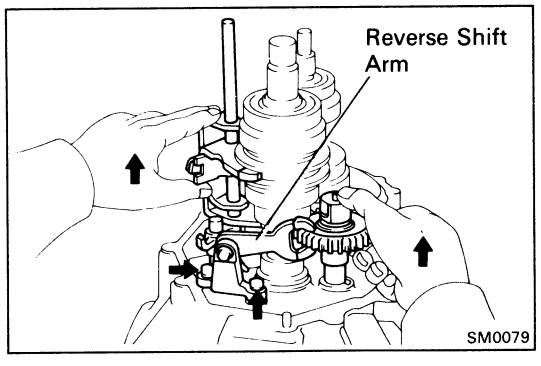

21. REMOVE REVERSE SHIFT ARM BRACKET ASSEMBLY

(a) Shift the shift fork shaft into reverse.

(b) Remove the two bolts and pull off the reverse shift arm.

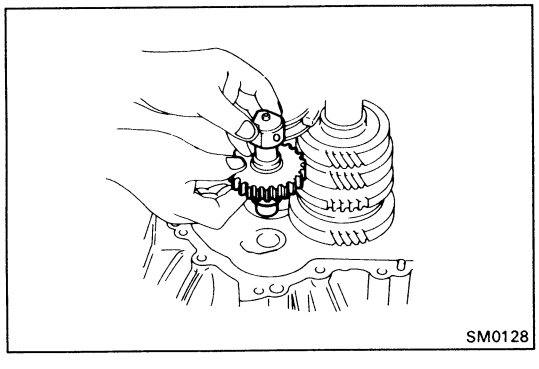

22. REMOVE REVERSE IDLER GEAR AND SHAFT

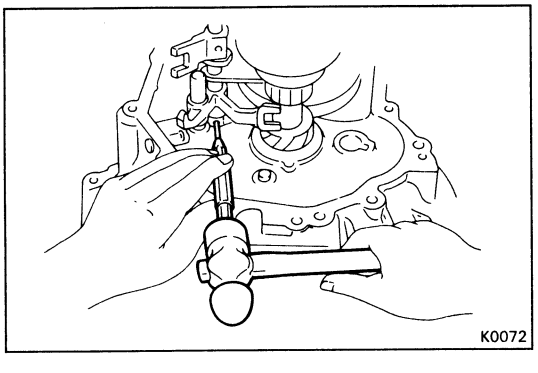

23. REMOVE NO. 1 SHIFT FORK SHAFT, NO. 1 SHIFT HEAD, NO. 1 AND NO. 2 SHIFT FORKS, INPUT SHAFT AND OUTPUT SHAFT

(a) Drive out the slotted spring pin from No. 1 fork shaft.

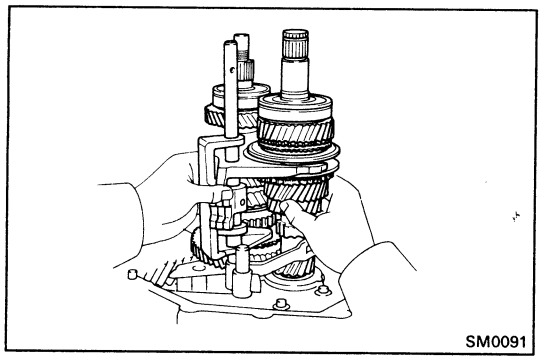

(b) Remove the input shaft and output shaft together with No. 1 fork shaft and shift head and shift forks from the transaxle case.

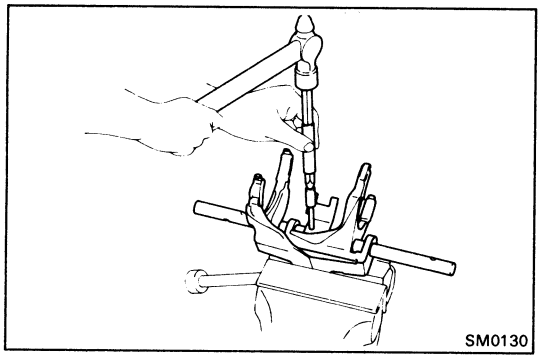

24. SEPARATE NO. 1 FORK SHAFT, NO. 1 SHIFT HEAD, NO. 1 AND NO. 2 SHIFT FORKS

(a) Mount the shift forks in a vise.

(b) Drive out the slotted spring pin from No. 1 fork shaft as shown.

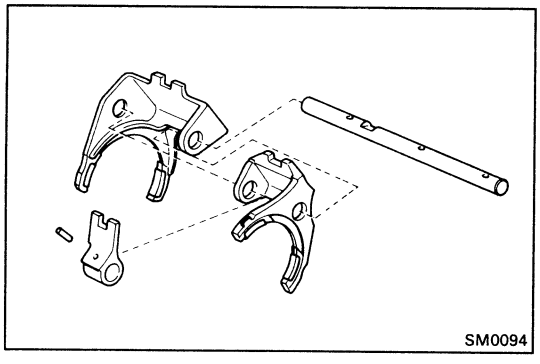

(c) Separate the No. 1 shift fork shaft No. 1 shift head, No. 1 and No. 2 shift fork.

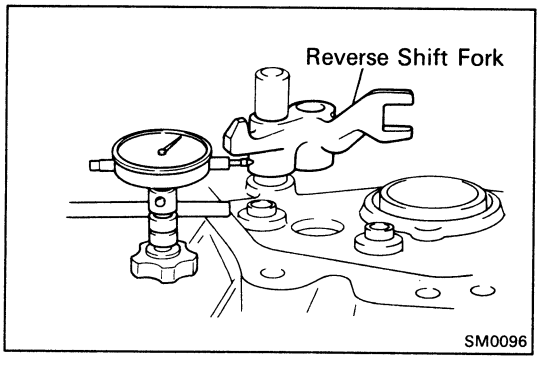

25. CHECK OIL CLEARANCE OF REVERSE SHIFT FORK

Maximum clearance: 0.70 mm (0.0276 in.)

26. REMOVE REVERSE SHIFT FORK AND INTERLOCK PIN

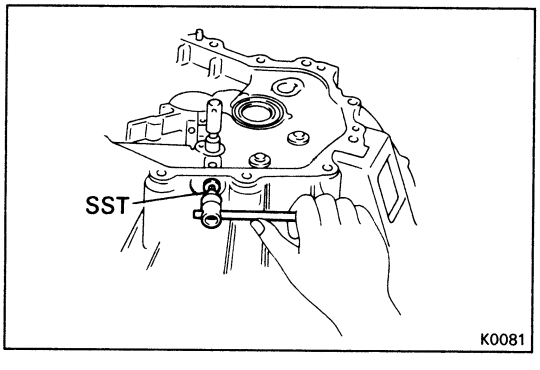

27. REMOVE NO. 2 FORK SHAFT

(a) Using SST, remove the screw plug.

SST 09313-30021

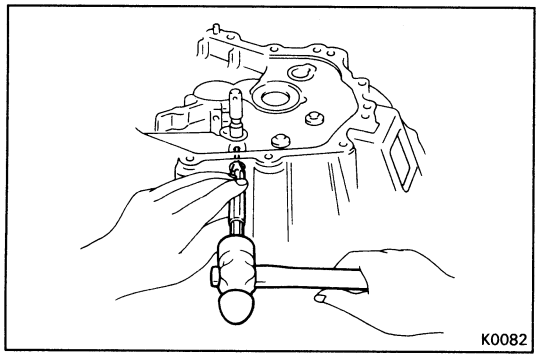

(b) Using a pin punch and hammer, drive out the slotted spring pin.

(c) Pull out the shaft.

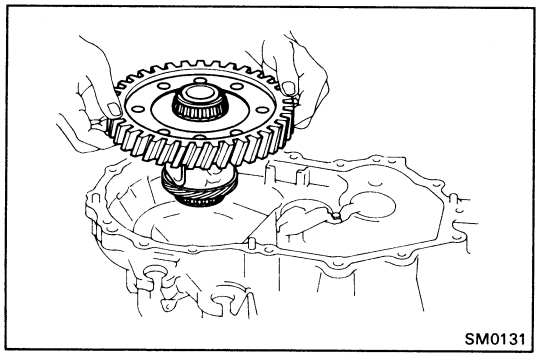

28. REMOVE DIFFERENTIAL ASSEMBLY

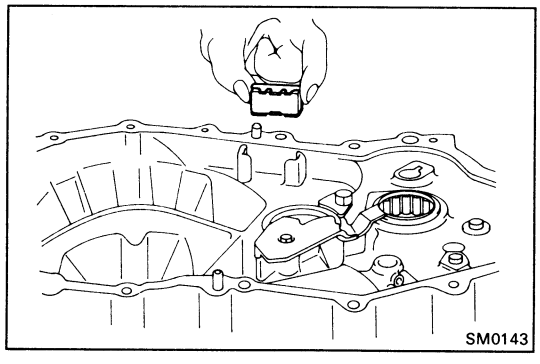

29. REMOVE MAGNET

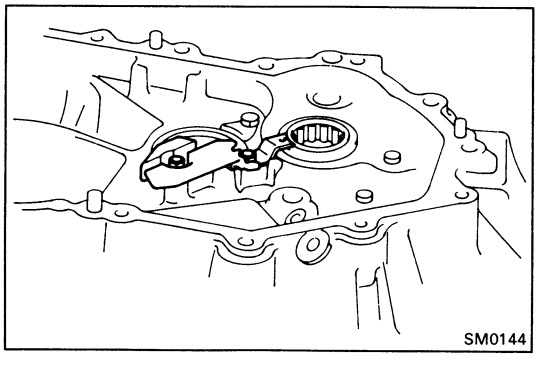

30. REMOVE TRANSAXLE OIL RECEIVER AND PLATE

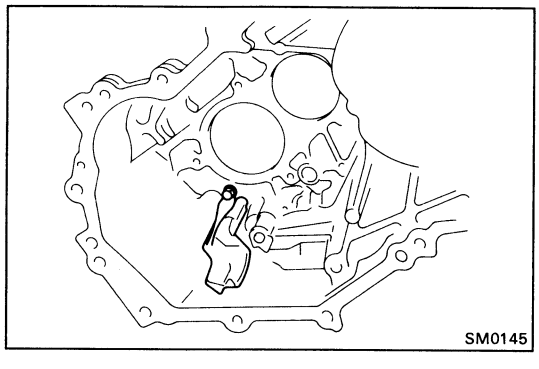

31. REMOVE NO. 1 OIL RECEIVER PIPE FROM TRANSMISSION CASE

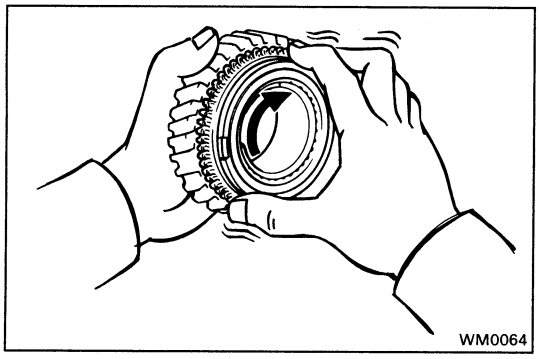

INSPECTION OF COMPONENT PARTS

1. INSPECT SYNCHRONIZER RING NO. 3 FOR FIFTH GEAR

(a) Check for wear or damage.

(b) Turn the ring and push it in to check the braking action.

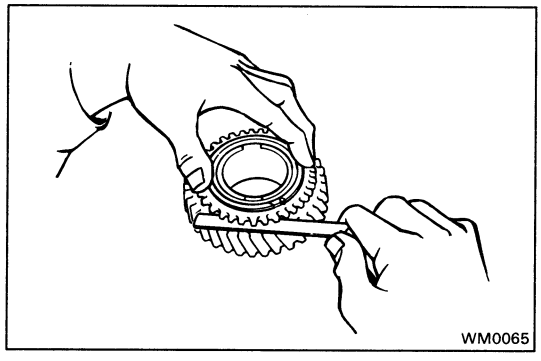

(c) Measure the clearance between the synchronizer ring back and the gear spline end.

Minimum clearance: 0.6 mm (0.024 in.)

If the clearance is less than the limit, replace the synchronizer ring.

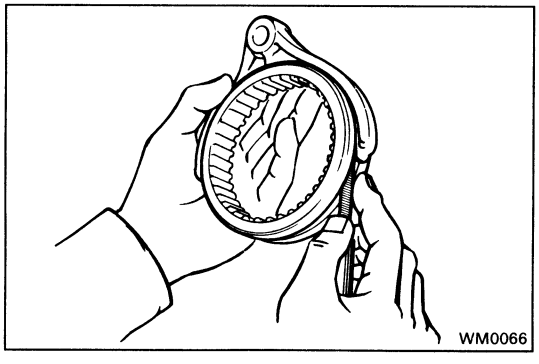

2. MEASURE CLEARANCE OF SHIFT FORKS AND HUB SLEEVE

Using a feeler gauge, measure the clearance between the hub sleeve and shift fork.

Maximum clearance: 1.0 mm (0.039 in.)

If the clearance exceeds the limit, replace the shift fork or hub sleeve.

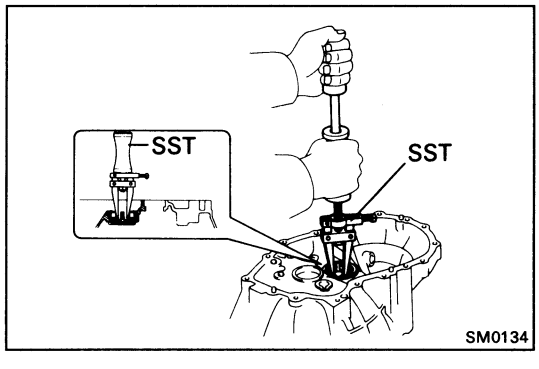

3. IF NECESSARY, REPLACE INPUT SHAFT FRONT BEARING AND OIL SEAL

(a) Using SST, pull out the bearing.

SST 09308-00010

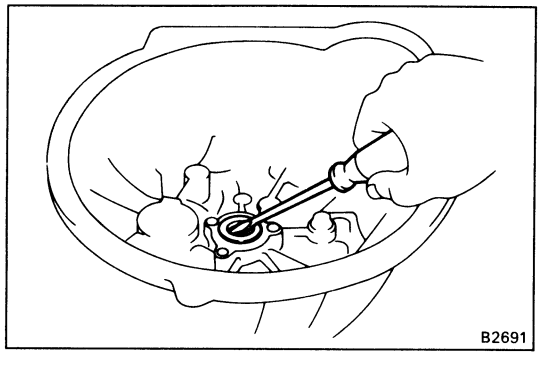

(b) Using a screwdriver, remove the oil seal.

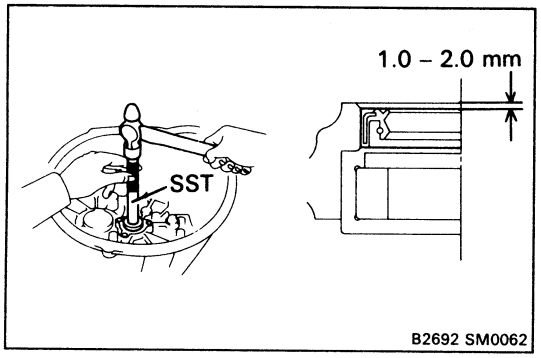

(c) Using SST, drive in a new oil seal.

SST 09608-20012 (09608-00080, 09608-03020)

Drive in depth: 1.0 – 2.0 mm (0.039 – 0.079 in.)

(d) Coat the lip of the oil seal with MP grease.

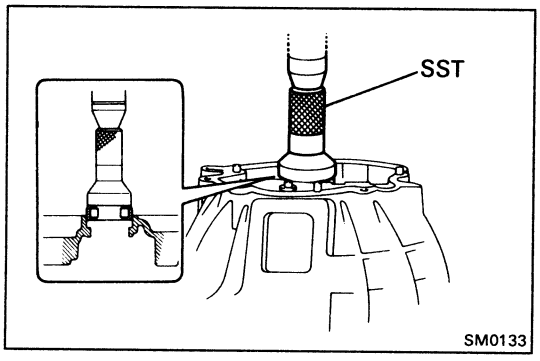

(e) Using SST, press in a new bearing.

SST 09310-35010

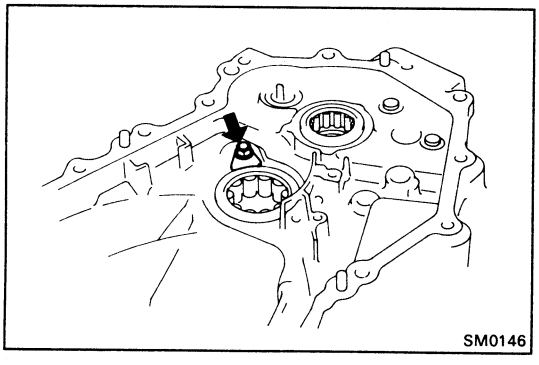

4. IF NECESSARY, REPLACE OUTPUT SHAFT FRONT BEARING AND OUTPUT SHAFT COVER

(a) Remove the bolt and bearing lock plate.

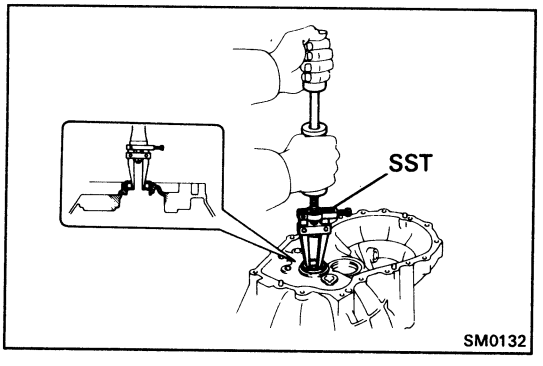

(b) Using SST, pull out the bearing.

SST 09308-00010

(c) Remove the output shaft cover.

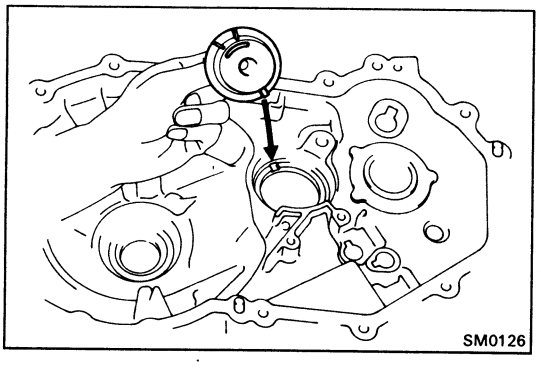

(d) Install the output shaft cover.

HINT: Install the output shaft cover projection into the case side groove.

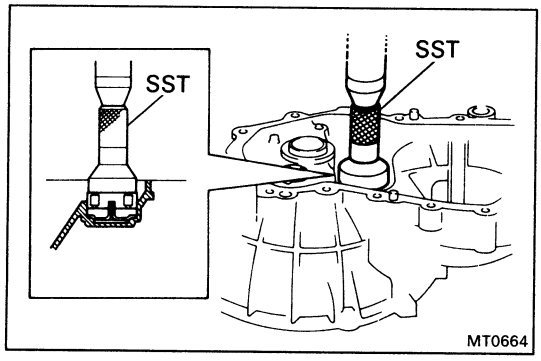

(e) Using SST, press in a new bearing.
SST 09310-35010

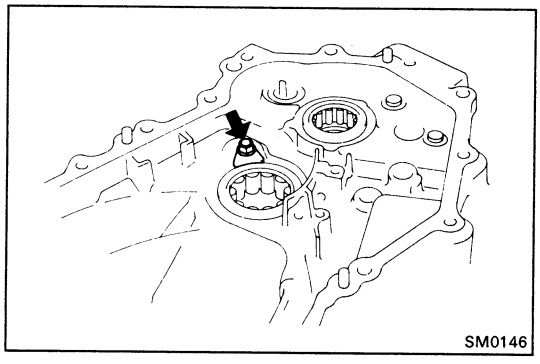

(f) Install the bearing lock plate and torque the bolt.
Torque: 185 kg-cm (13 ft-lb, 18 N·m)

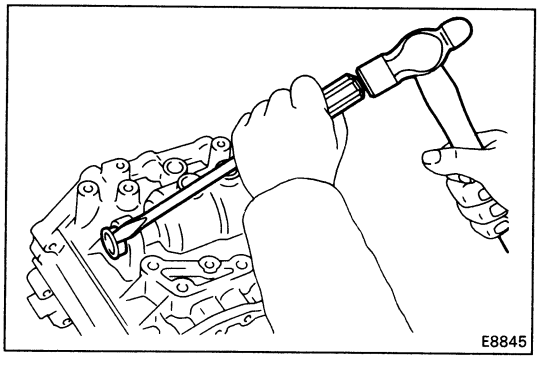

5. IF NECESSARY, REPLACE CONTROL SHAFT COVER OIL SEAL

(a) Using a screwdriver and hammer, remove the oil seal.

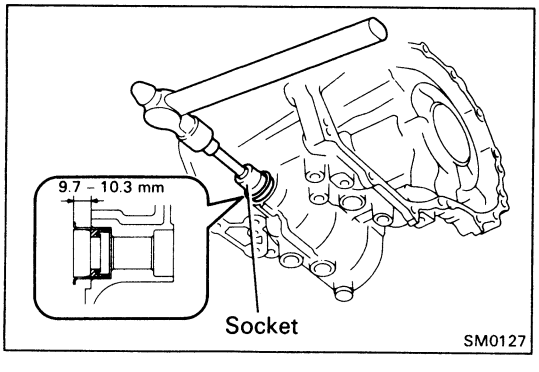

(b) Using a 17 mm socket and extension bar, drive in a new oil seal.
Drive in depth: 9.7 – 10.3 mm (0.382 – 0.406 in.)
(c) Coat the lip of the oil seal with MP grease.

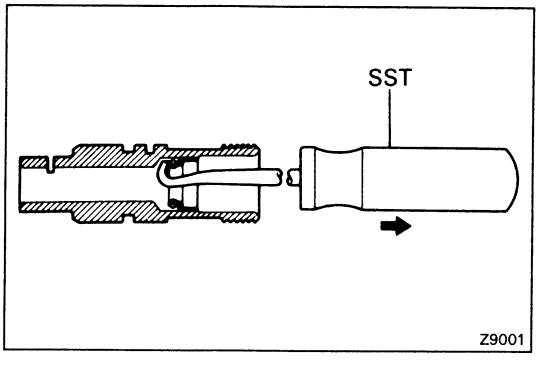

6. IF NECESSARY, REPLACE SPEEDOMETER DRIVEN GEAR OIL SEAL

(a) Using SST, pull out the oil seal.
SST 09921-00010

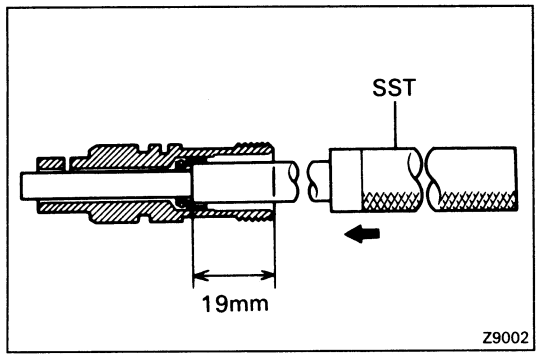

(b) Using SST, drive in a new oil seal.

SST 09201-60011

Drive in depth: 19 mm (0.75 in.)

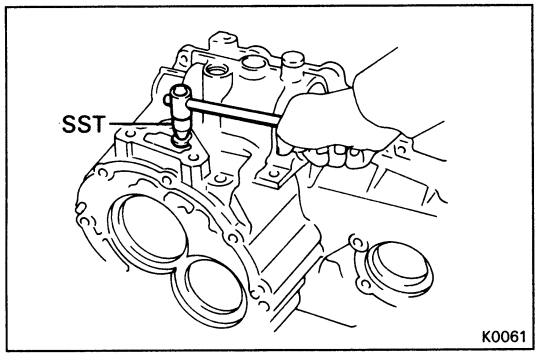

7. IF NECESSARY, REPLACE REVERSE RESTRICT PIN

(a) Using SST, remove the screw plug.

SST 09313-30021

(b) Using a pin punch and hammer, drive out the slotted spring pin.

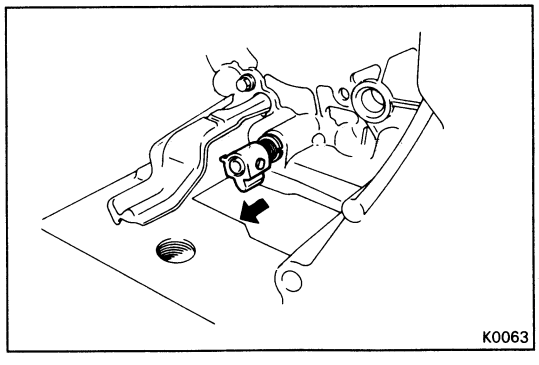

(c) Replace the reverse restrict pin.

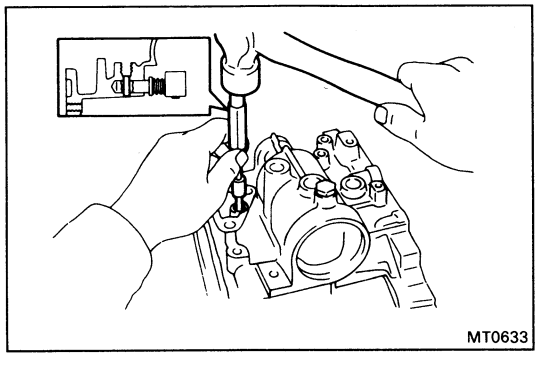

(d) Using a pin punch and hammer, drive in the slotted spring pin.

(e) Apply liquid sealant to the plug threads.

Sealant: Part No. 08833-00080, THREE BOND 1344, LOCTITE 242 or equivalent

(f) Using SST, install the screw plug.

SST 09313-30021

Torque: 130 kg-cm (9 ft-lb, 13 N·m)

COMPONENT PARTS

Input Shaft Assembly

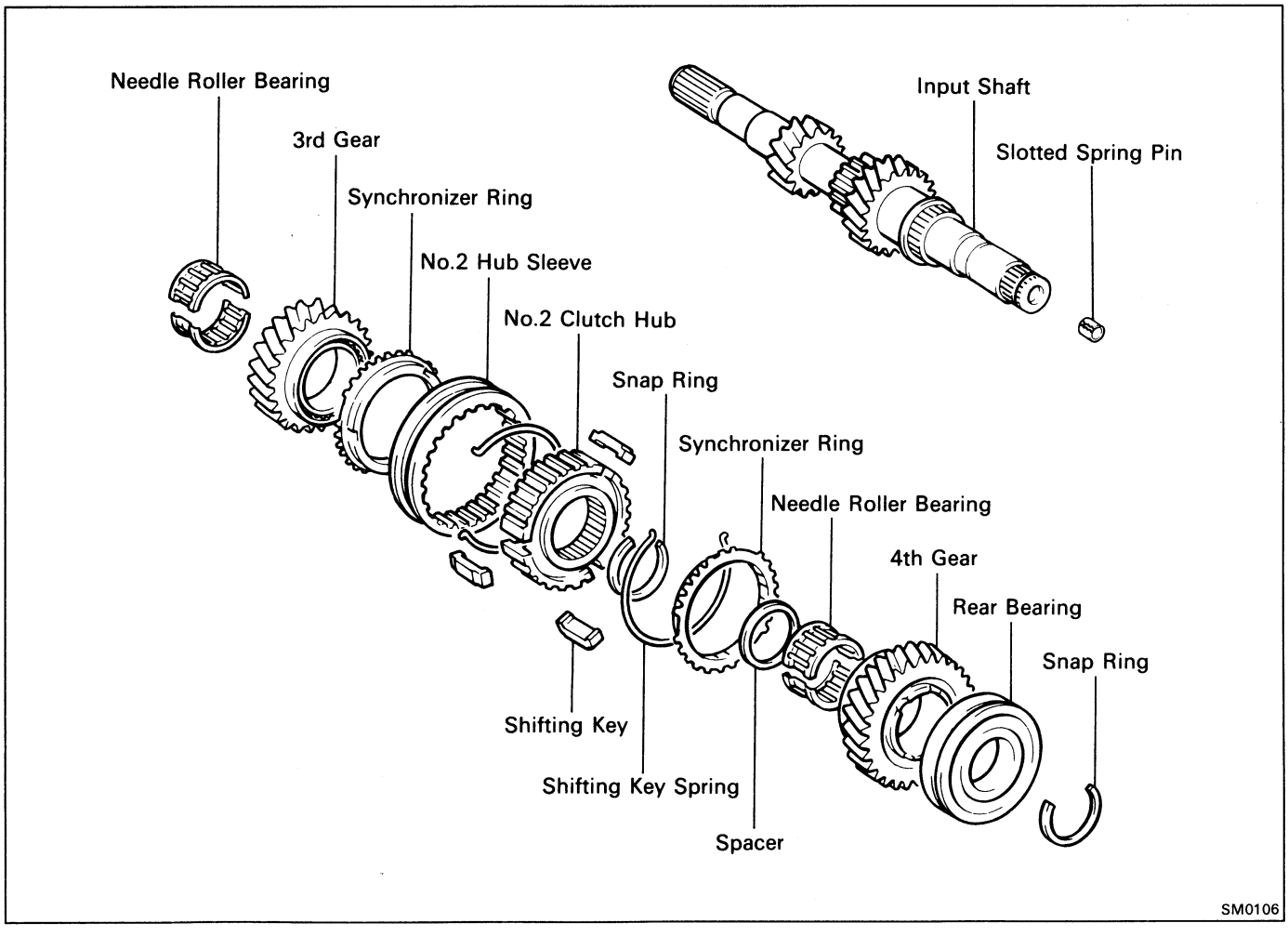

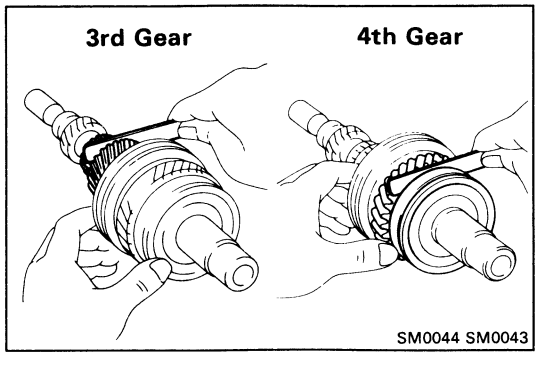

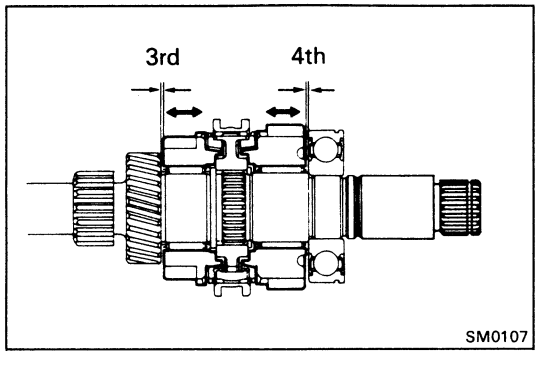

DISASSEMBLY OF INPUT SHAFT ASSEMBLY

1. **MEASURE THIRD AND FOURTH GEAR THRUST CLEARANCE**

   Using a feeler gauge, measure the thrust clearance.

   Standard clearance:

   3rd gear 0.10 – 0.25 mm (0.0039 – 0.0098 in.)

   4th gear 0.20 – 0.45 mm (0.0079 – 0.0177 in.)

   Maximum clearance:

   3rd gear 0.30 mm (0.0118 in.)

   4th gear 0.50 mm (0.0197 in.)

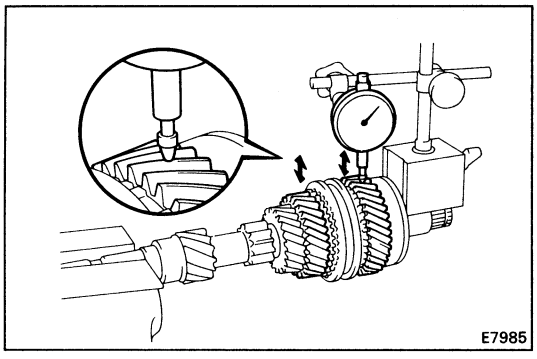

2. CHECK OIL CLEARANCE OF THIRD AND FOURTH GEAR

Using dial indicator, measure the oil clearance between the gear and shaft.

Standard clearance:

3rd and 4th gear	**0.009 – 0.053 mm (0.0004 – 0.0020 in.)**

Maximum clearance:

3rd and 4th gear	**0.070 mm (0.0028 in.)**

If clearance exceeds the limit, replace the gear, needle roller bearing or shaft.

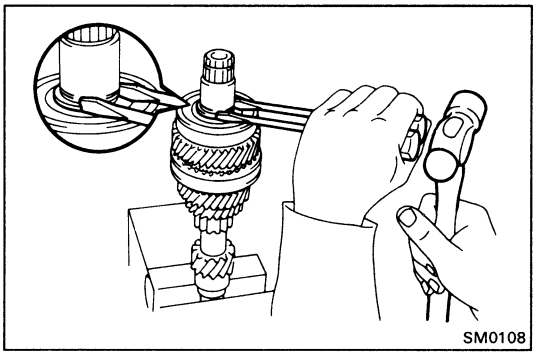

3. REMOVE SNAP RING

Using two screwdrivers and a hammer, tap out the snap ring.

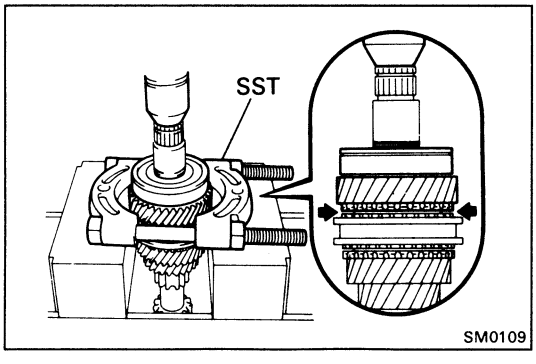

4. REMOVE RADIAL BALL BEARING AND FOURTH GEAR

Using SST and a press, remove the radial ball bearing.

SST 09950-00020

5. REMOVE NEEDLE ROLLER BEARINGS, SPACER AND SYNCHRONIZER RING

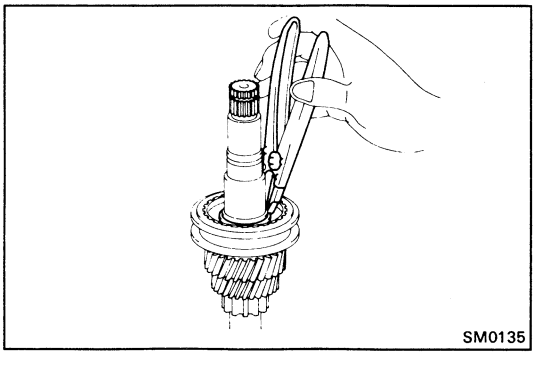

6. REMOVE SNAP RING

Using snap ring pliers, remove the snap ring.

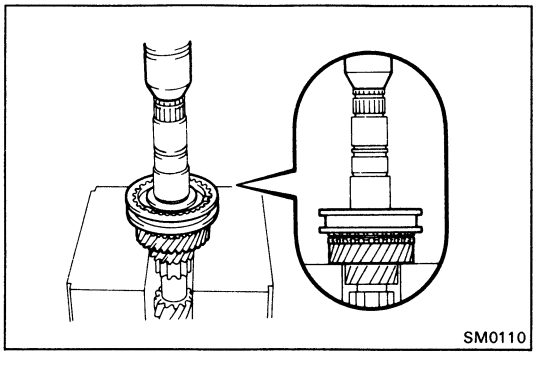

7. REMOVE NO. 2 CLUTCH HUB ASSEMBLY, SYNCHRONIZER RING AND THIRD GEAR

Using a press, remove No. 2 hub sleeve, 3rd gear, synchronizer ring and needle roller bearings.

8. REMOVE NEEDLE ROLLER BEARING

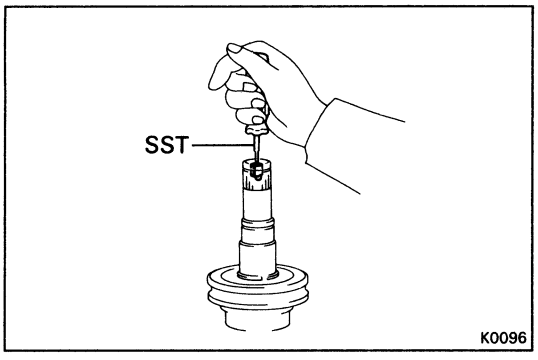

9. REMOVE SLOTTED SPRING PIN

Using SST, remove the slotted spring pin.

SST 09921-00010

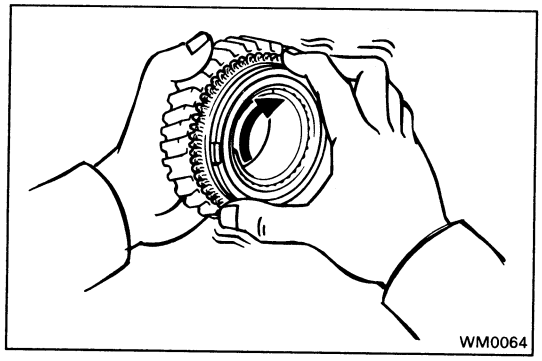
WM0064

INSPECTION OF INPUT SHAFT COMPONENT PARTS

1. INSPECT SYNCHRONIZER RINGS

(a) Check for wear or damage.

(b) Turn the ring and push it in to check the braking action.

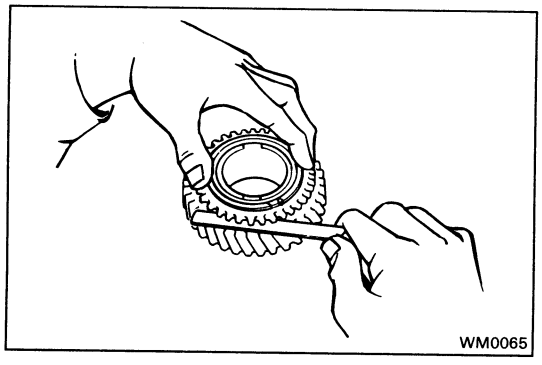
WM0065

(c) Measure the clearance between the synchronizer ring back and the gear spline end.

Minimum clearance: 0.6 mm (0.024 in.)

If the clearance is less than the limit, replace the synchronizer ring.

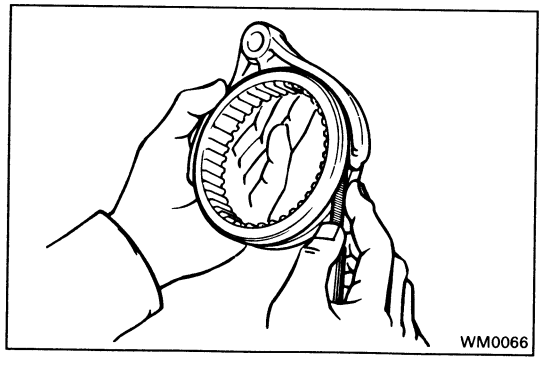
WM0066

2. MEASURE CLEARANCE OF NO. 2 SHIFT FORK AND HUB SLEEVE

Using a feeler gauge, measure the clearance between the hub sleeve and shift fork.

Maximum clearance: 1.0 mm (0.039 in.)

If the clearance exceeds the limit, replace the shift fork or hub sleeve.

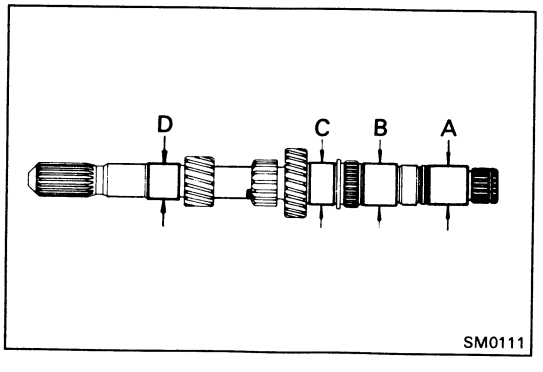

SM0111

3. INSPECT INPUT SHAFT

(a) Check the input shaft for wear or damage.

(b) Using a micrometer, measure the outer diameter of the input shaft journal surface.

Minimum outer diameter:

Part A 26.970 mm (1.0618 in.)
B 32.420 mm (1.2764 in.)
C 33.090 mm (1.3028 in.)
D 29.970 mm (1.1799 in.)

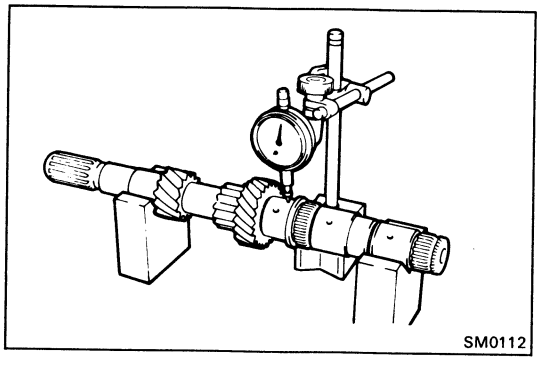
SM0112

(c) Using a dial indicator, check the shaft runout.

Maximum runout: 0.05 mm (0.0020 in.)

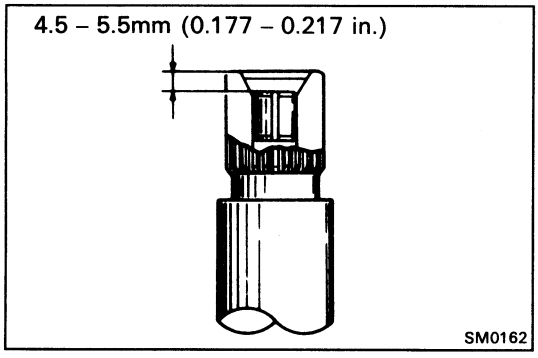

ASSEMBLY OF INPUT SHAFT ASSEMBLY

(See page MT-21)

HINT: Coat all of the sliding and rotating surface with ATF before assembly.

1. INSTALL SLOTTED SPRING PIN

Drive in a slotted spring pin.

Drive in depth: 4.5 – 5.5 mm (0.177 – 0.217 in.)

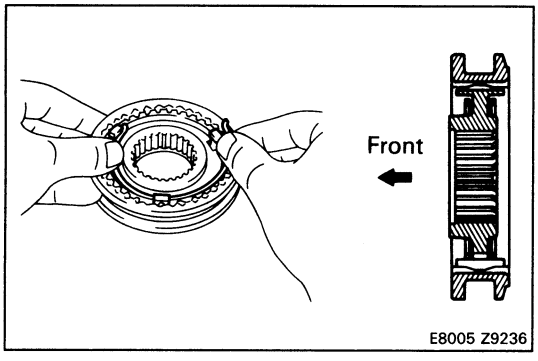

2. INSERT NO. 2 CLUTCH HUB INTO HUB SLEEVE

(a) Install the clutch hub and shifting keys to the hub sleeve.

(b) Install the shifting key springs under the shifting keys.

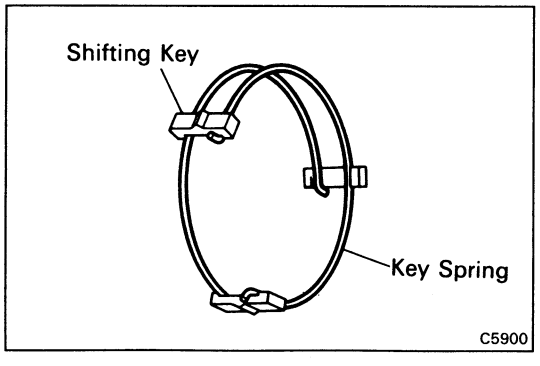

NOTICE: Install the shifting key springs positioned so that their end gaps are not in line.

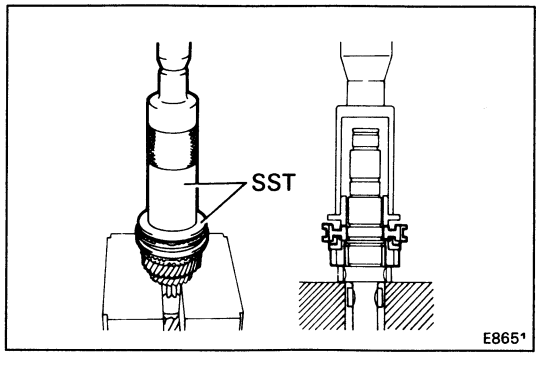

3. INSTALL NEEDLE ROLLER BEARING, THIRD GEAR, SYNCHRONIZER RING AND NO. 2 HUB SLEEVE ASSEMBLY TO INPUT SHIFT

(a) Apply ATF to the needle roller bearings.

(b) Install the 3rd gear.

(c) Place the synchronizer ring on the gear and align the ring slots with the shifting keys.

(d) Using SST and a press, install the 3rd gear and No. 2 hub sleeve.

SST 09316-60010 (09316-00010, 09316-00070)

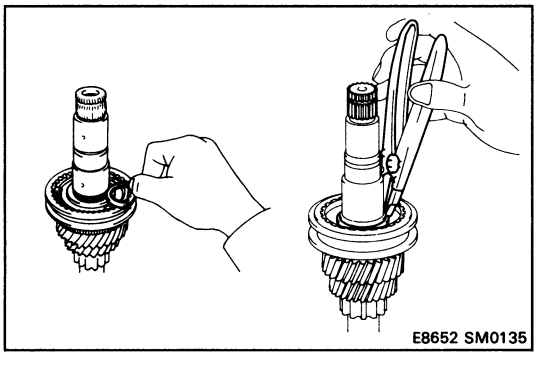

4. INSTALL SNAP RING

Select a snap ring that will allow minimum axial play and install it on the shaft.

Mark	Thickness mm (in.)
1	1.95 – 2.00 (0.0768 – 0.0787)
2	2.00 – 2.05 (0.0787 – 0.0807)
3	2.05 – 2.10 (0.0807 – 0.0827)
4	2.10 – 2.15 (0.0827 – 0.0846)
5	2.15 – 2.20 (0.0846 – 0.0866)
6	2.20 – 2.25 (0.0866 – 0.0886)

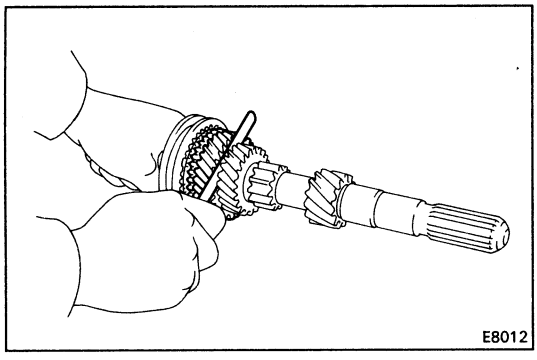

5. MEASURE THIRD GEAR THRUST CLEARANCE

Using a feeler gauge, measure the 3rd gear thrust clearance.

Standard clearance: 0.10 – 0.25 mm (0.0039 – 0.0098 in.)

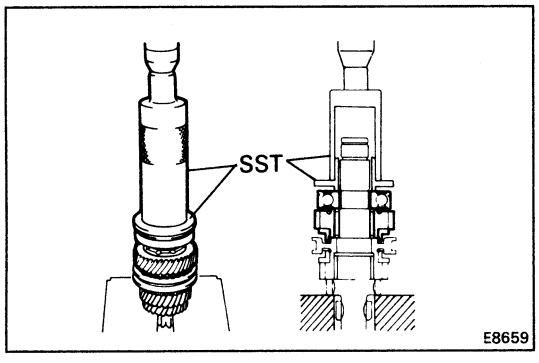

6. INSTALL SPACER, SYNCHRONIZER RING, NEEDLE ROLLER BEARINGS, FOURTH GEAR AND RADIAL BALL BEARING

(a) Install the spacer.

(b) Apply ATF to the needle roller bearings.

(c) Place the synchronizer ring on the gear and align the ring slots with the shifting keys.

(d) Install the 4th gear.

(e) Using SST and a press, install the radial ball bearing.

SST 09316-60010 (09316-00010, 09316-00070)

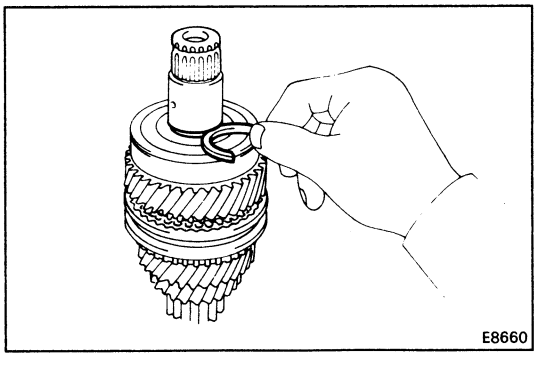

7. INSTALL SNAP RING

Select a snap ring that will allow minimum axial play and install it on the shaft.

Mark	Thickness mm (in.)
A	2.15 – 2.20 (0.0846 – 0.0866)
B	2.20 – 2.25 (0.0866 – 0.0886)
C	2.25 – 2.30 (0.0886 – 0.0906)
D	2.30 – 2.35 (0.0906 – 0.0925)
E	2.35 – 2.40 (0.0925 – 0.0945)

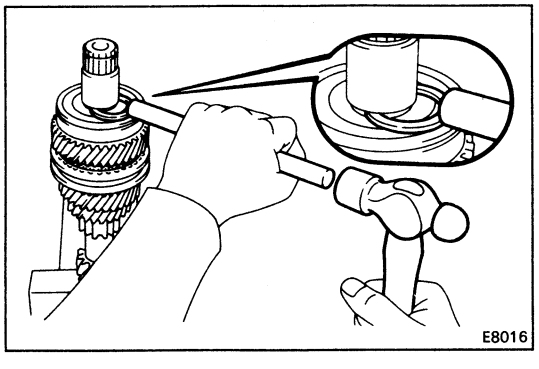

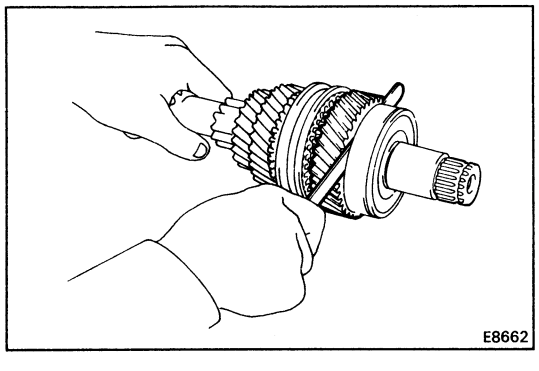

8. MEASURE FOURTH GEAR THRUST CLEARANCE

Using a feeler gauge, measure the 4th gear thrust clearance.

Standard clearance: 0.20 – 0.45 mm (0.0079 – 0.0177 in.)

Output Shaft Assembly

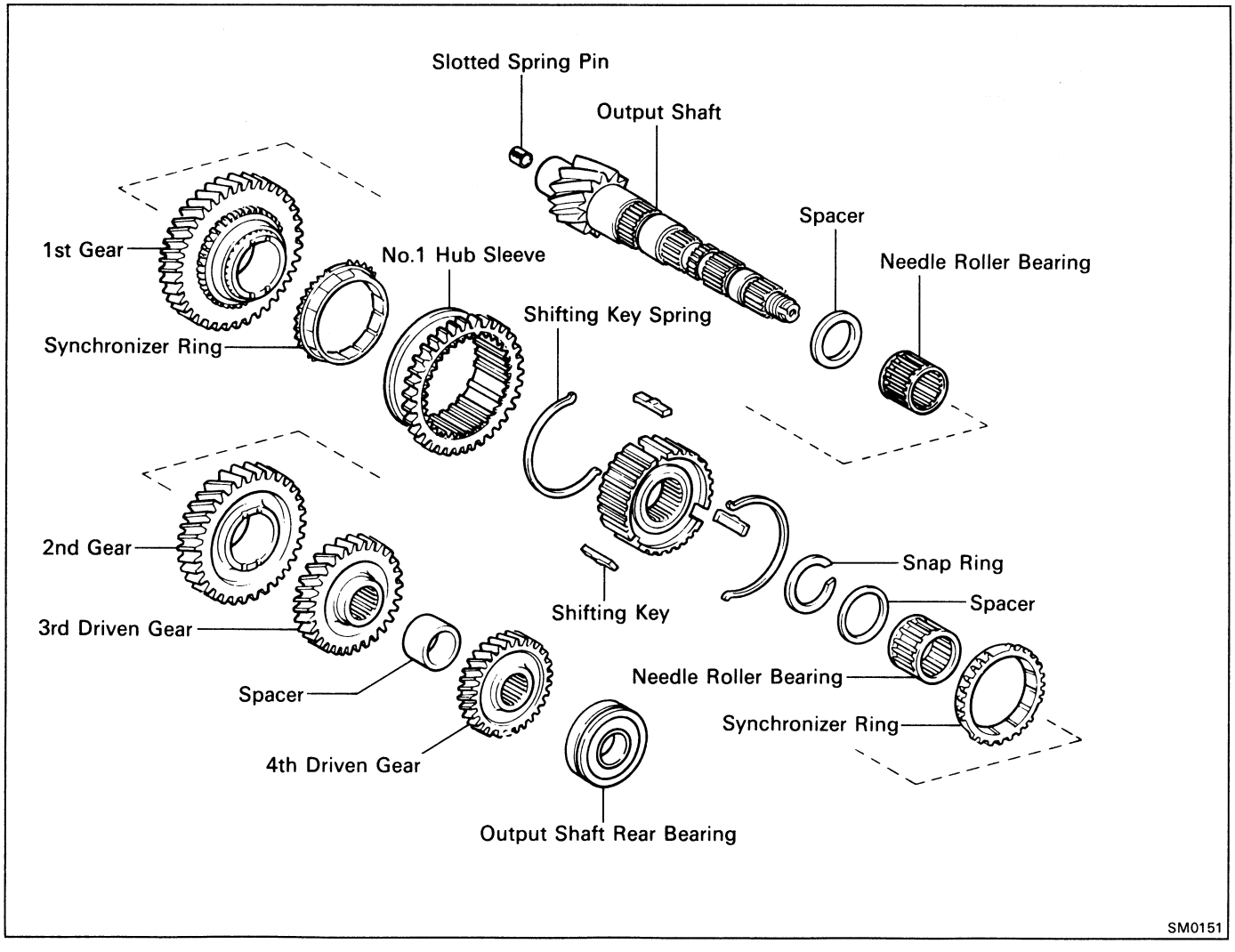

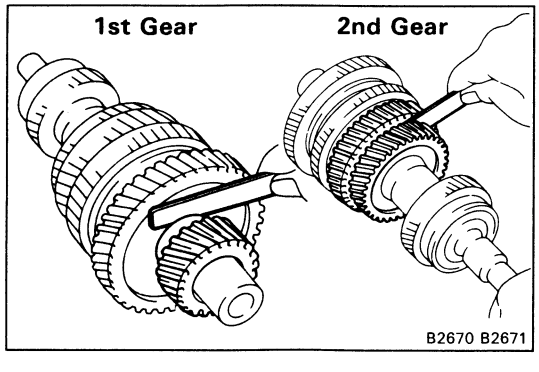

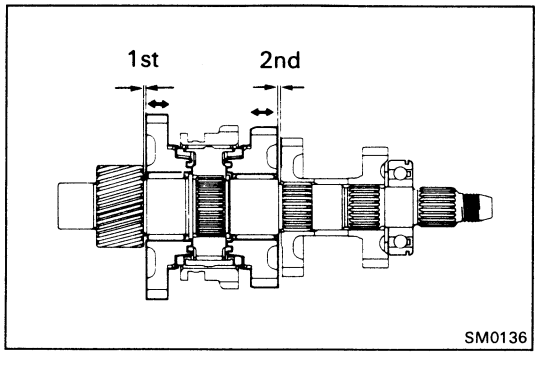

DISASSEMBLY OF OUTPUT SHAFT ASSEMBLY

1. MEASURE FIRST AND SECOND GEAR THRUST CLEARANCE

Using a feeler gauge, measure the thrust clearance.

Standard clearance:

1st gear	**0.10 – 0.29 mm (0.0039 – 0.0114 in.)**
2nd gear	**0.20 – 0.44 mm (0.0079 – 0.0173 in.)**

Maximum clearance:

1st gear	**0.35 mm (0.0138 in.)**
2nd gear	**0.50 mm (0.0197 in.)**

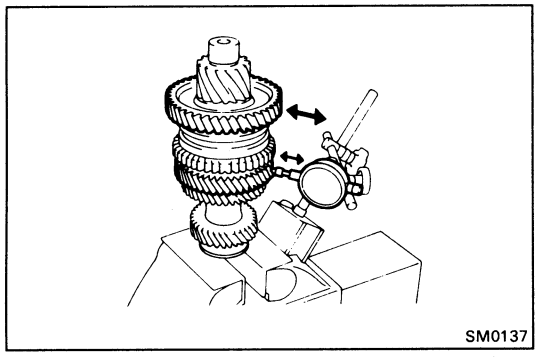
SM0137

2. CHECK OIL CLEARANCE OF FIRST AND SECOND GEAR

Using dial indicator, measure the oil clearance between the gear and shaft.

Standard clearance:

1st and 2nd gear	**0.009 – 0.053 mm (0.0004 – 0.0020 in.)**

Maximum clearance:

1st and 2nd gear	**0.070 mm (0.0028 in.)**

If the clearance exceeds the limit, replace the gear, needle roller bearing or shaft.

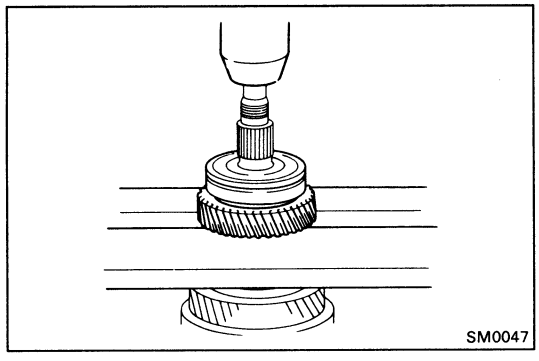
SM0047

3. REMOVE OUTPUT SHAFT REAR BEARING, FOURTH DRIVEN GEAR AND SPACER

(a) Using a press, remove the bearing and 4th driven gear.

(b) Remove the spacer.

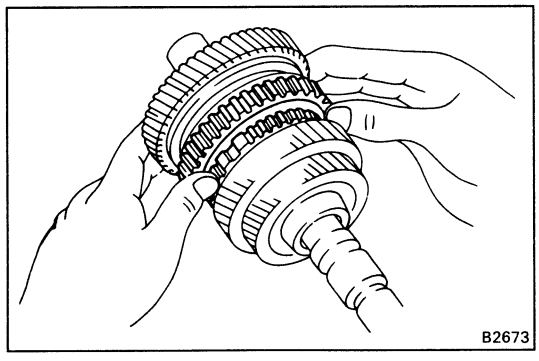
B2673

4. REMOVE THIRD DRIVEN GEAR AND SECOND GEAR

(a) Shift the No. 1 hub sleeve into the 1st gear.

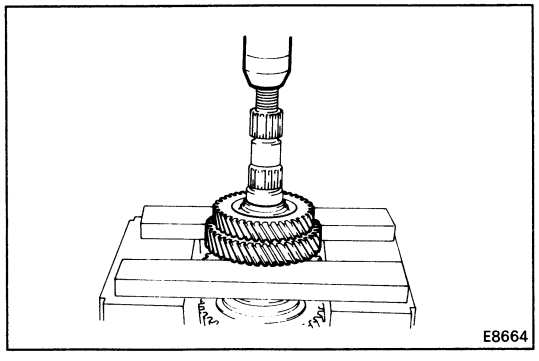
E8664

(b) Using a press, remove the 3rd driven gear and 2nd gear.

5. REMOVE NEEDLE ROLLER BEARINGS, SPACER AND SYNCHRONIZER RING

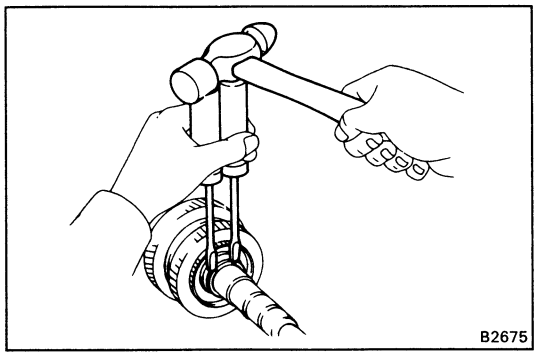
B2675

6. REMOVE SNAP RING

Using two screwdrivers and a hammer, tap out the snap ring.

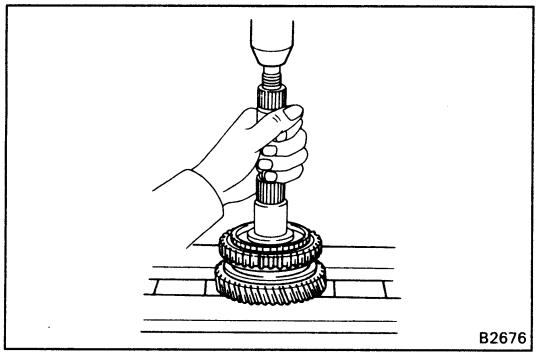

7. REMOVE NO. 1 HUB SLEEVE ASSEMBLY AND FIRST GEAR

Using a press, remove No. 1 hub sleeve and 1st gear.

8. REMOVE SYNCHRONIZER RING AND NEEDLE ROLLER BEARING AND THRUST WASHER

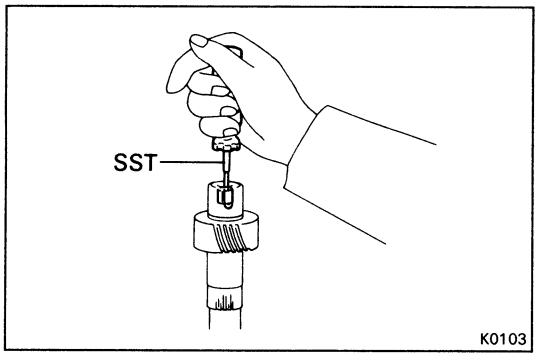

9. REMOVE SLOTTED SPRING PIN

Using SST, remove the slotted spring pin.

SST 09921-00010

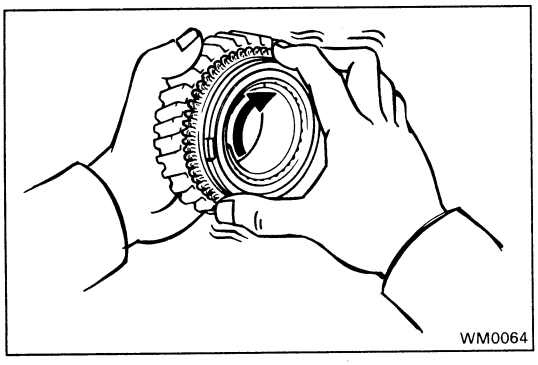

INSPECTION OF OUTPUT SHAFT COMPONENT PARTS

1. INSPECT SYNCHRONIZER RINGS

(a) Check for wear or damage.

(b) Turn the ring and push it in to check the braking action.

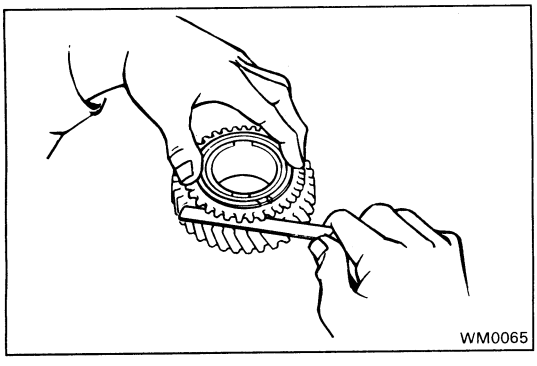

(c) Measure the clearance between the synchronizer ring back and the gear spline end.

Maximum clearance: 0.6 mm (0.024 in.)

If the clearance is less than the limit, replace the synchronizer ring.

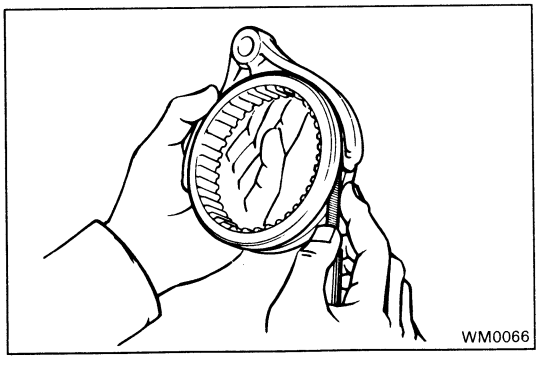

2. MEASURE CLEARANCE OF NO. 1 SHIFT FORK AND HUB SLEEVE

Using a feeler gauge, measure the clearance between the hub sleeve and shift fork.

Maximum clearance: 1.0 mm (0.039 in.)

If the clearance exceeds the limit, replace the shift fork or hub sleeve.

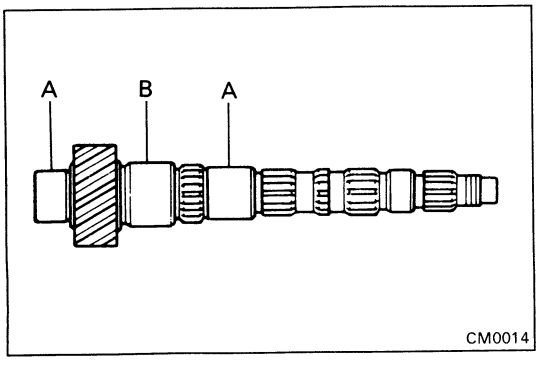

3. INSPECT OUTPUT SHAFT

(a) Check the output shaft for wear or damage.

(b) Using a micrometer, measure the outer diameter of the output shaft journal surface.

Minimum outer diameter:

Part A 31.970 mm (1.2587 in.)

B 37.970 mm (1.4949 in.)

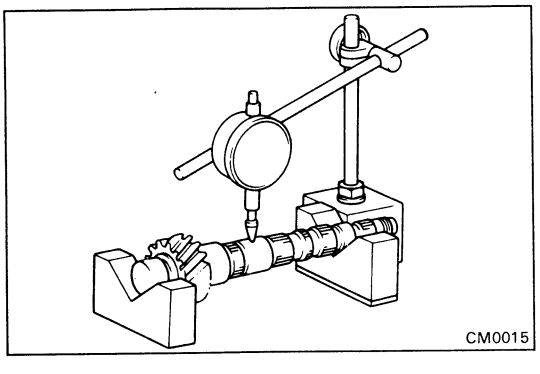

(c) Using a dial indicator, check the shaft runout.

Maximum runout: 0.05 mm (0.0020 in.)

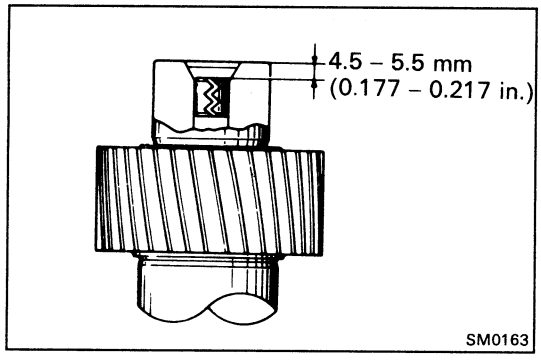

ASSEMBLY OF OUTPUT SHAFT ASSEMBLY

(See page MT-27)

HINT: Coat all of the sliding and rotating surface with ATF before assembly.

1. INSTALL SLOTTED SPRING PIN

Drive in a slotted spring pin.

Drive in depth: 4.5 – 5.5 mm (0.177 – 0.217 in.)

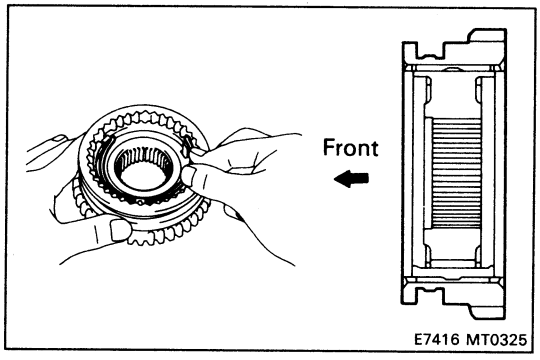

2. INSERT NO. 1 CLUTCH HUB INTO HUB SLEEVE

(a) Install the clutch hub and shifting keys to the hub sleeve.

(b) Install the shifting key springs under the shifting keys.

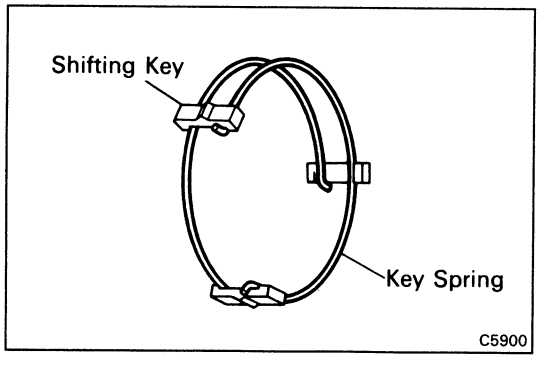

NOTICE: Install the key springs positioned so that their end gaps are not in line.

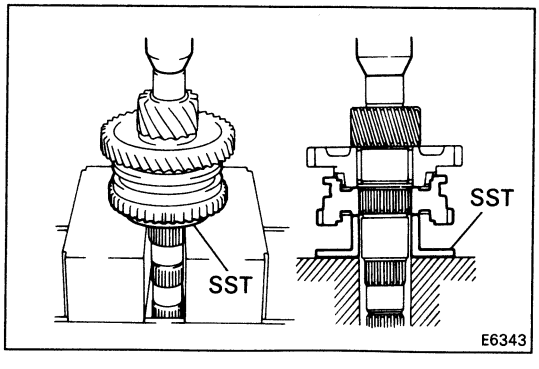

3. INSTALL NEEDLE ROLLER BEARING, FIRST GEAR, SYNCHRONIZER RING AND NO. 1 HUB SLEEVE TO OUTPUT SHAFT

(a) Apply ATF to the needle roller bearings.

(b) Install the 1st gear.

(c) Place the synchronizer ring on the gear and align the ring slots with the shifting keys.

(d) Using SST and a press, install the 1st gear and No. 1 hub sleeve.

SST 09316-60010 (09316-00030)

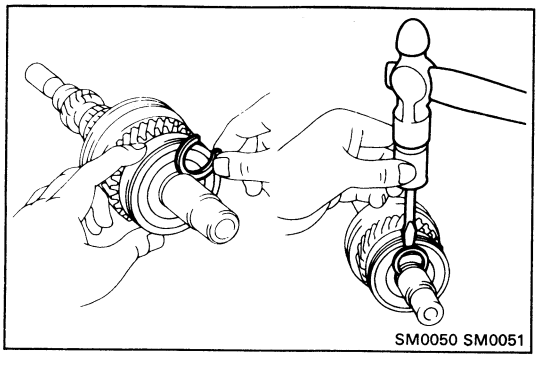

4. INSTALL SNAP RING

Select a snap ring that will allow minimum axial play and install it on the shaft.

Mark	Thickness mm (in.)
1	2.50 – 2.55 (0.0984 – 0.1004)
2	2.55 – 2.60 (0.1004 – 0.1024)
3	2.60 – 2.65 (0.1024 – 0.1043)
4	2.65 – 2.70 (0.1043 – 0.1063)
5	2.70 – 2.75 (0.1063 – 0.1083)
6	2.75 – 2.80 (0.1083 – 0.1102)

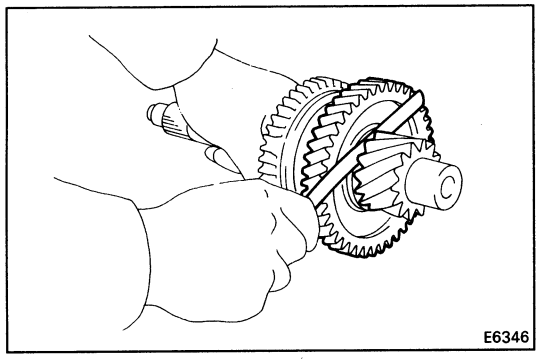

5. MEASURE FIRST GEAR THRUST CLEARANCE

Using a feeler gauge, measure the 1st gear thrust clearance.

Standard clearance: 0.10 – 0.29 mm (0.0039 – 0.0114 in.)

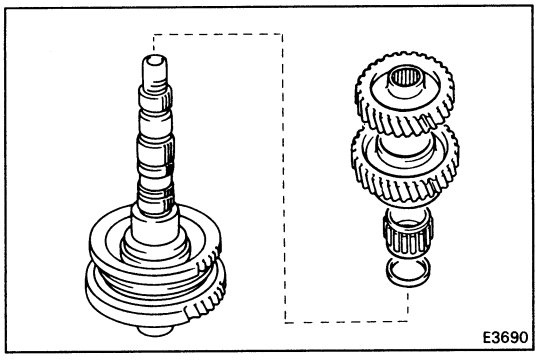

6. INSTALL SPACER, NEEDLE ROLLER BEARING, SYNCHRONIZER RING, SECOND GEAR AND THIRD DRIVEN GEAR

(a) Install the spacer.

(b) Apply ATF to the needle roller bearing.

(c) Place the synchronizer ring on the gear and align the ring slots with the shifting keys.

(d) Install the 2nd gear.

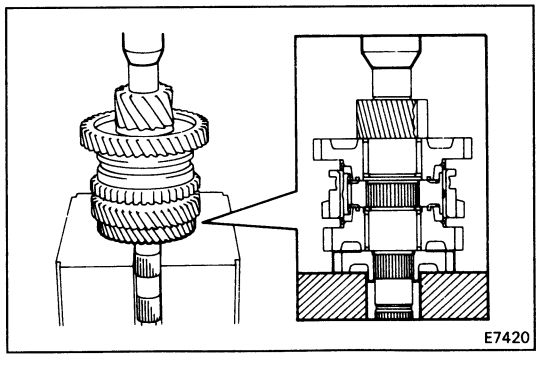

(e) Using a press, install the 3rd driven gear.

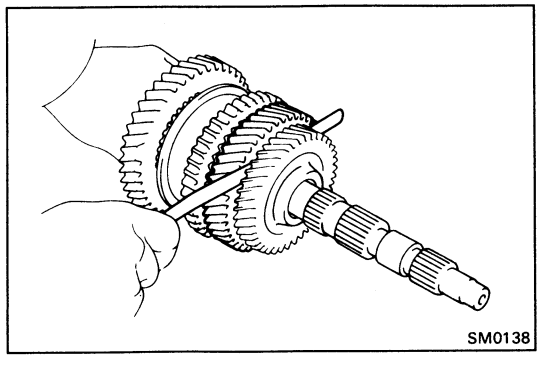

7. MEASURE SECOND GEAR THRUST CLEARANCE

Using a feeler gauge, measure the 2nd gear thrust clearance.

Standard clearance: 0.20 – 0.44 mm (0.0079 – 0.0173 in.)

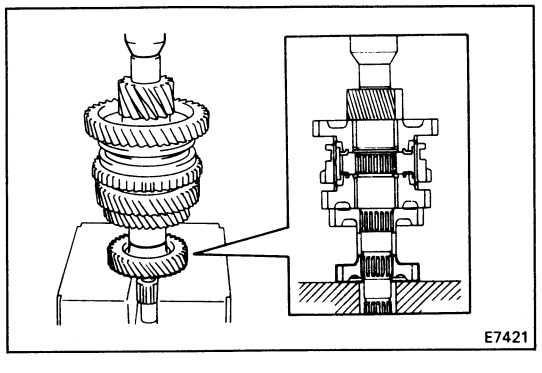

8. INSTALL SPACER AND FOURTH DRIVEN GEAR

(a) Install the spacer.

(b) Using a press, install the 4th driven gear.

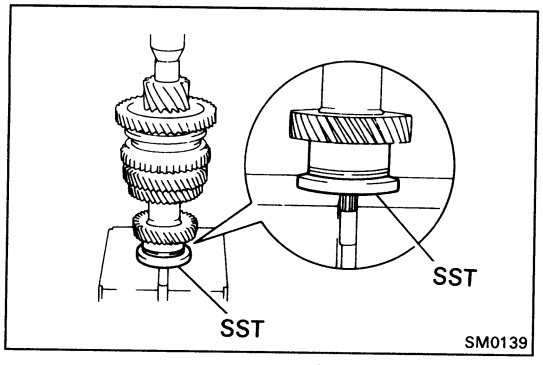

9. INSTALL OUTPUT SHAFT REAR BEARING

Using SST and a press, install the bearing.

SST 09515-10010

Shift and Select Lever Assembly

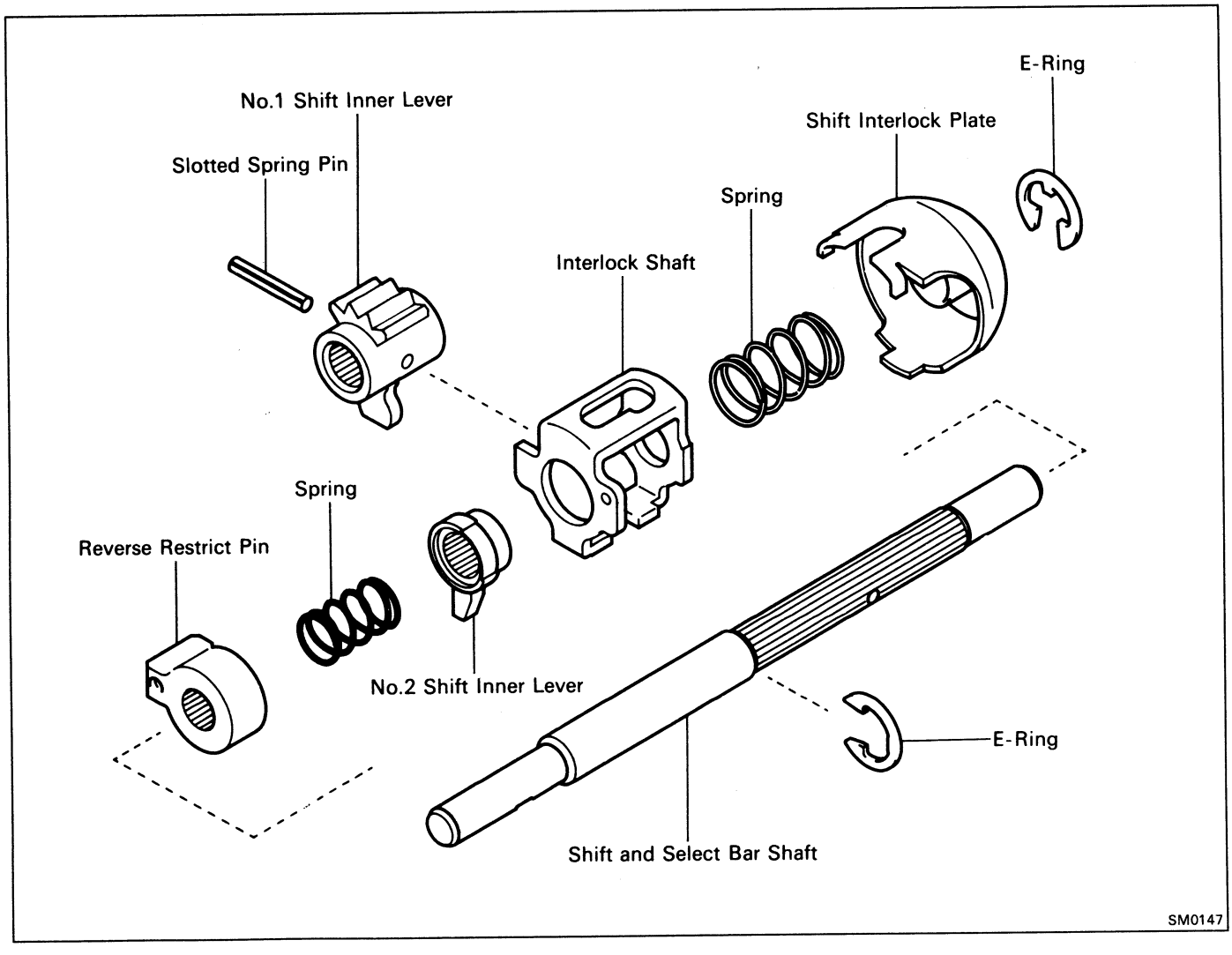

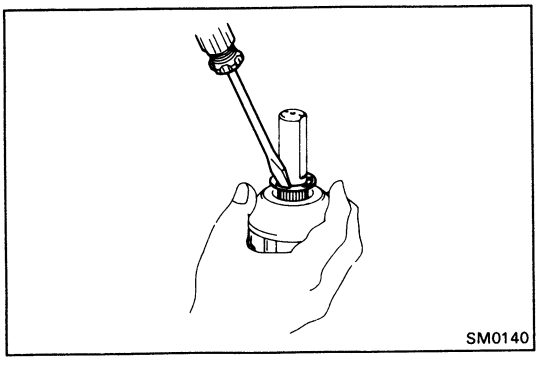

DISASSEMBLY OF SHIFT AND SELECT LEVER ASSEMBLY

1. REMOVE SHIFT INTERLOCK PLATE

(a) Remove the E-ring.

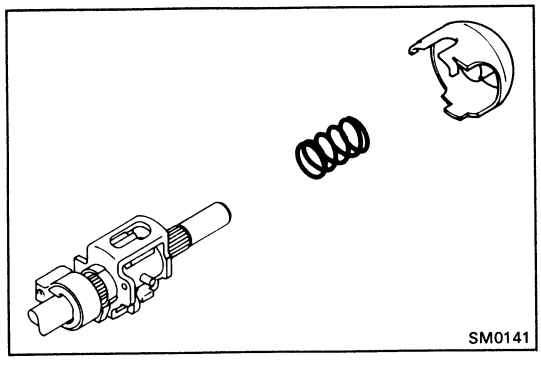

(b) Remove the interlock plate and spring.

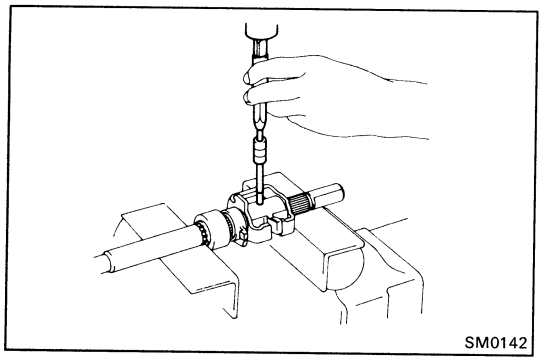

2. **REMOVE INTERLOCK SHAFT, NO. 1 SHIFT INNER LEVER, NO. 2 SHIFT INNER LEVER, SPRING AND REVERSE RESTRICT PIN**

(a) Using a pin punch and hammer, drive out the slotted spring pin.

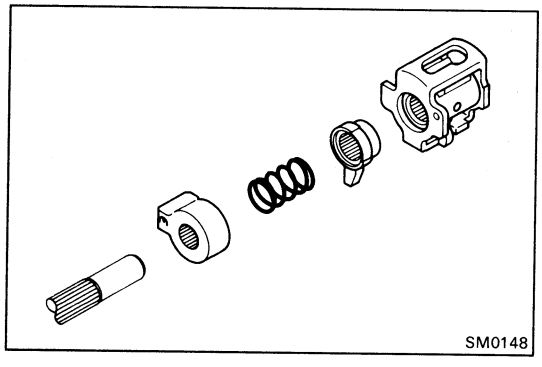

(b) Remove the interlock shaft, No. 1 shift inner lever, No. 2 shift inner lever, spring and reverse restrict pin.

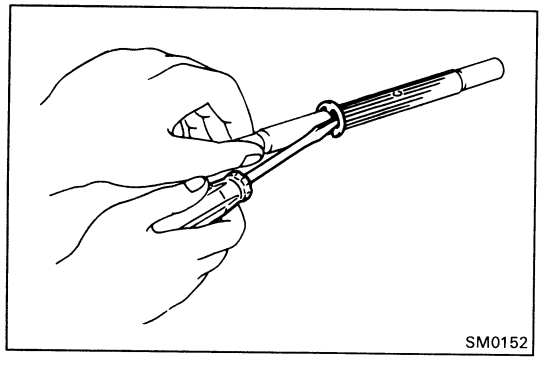

3. **REMOVE E-RING**

ASSEMBLY OF SHIFT AND SELECT LEVER ASSEMBLY

1. **APPLY MP GREASE TO PARTS, AS SHOWN**

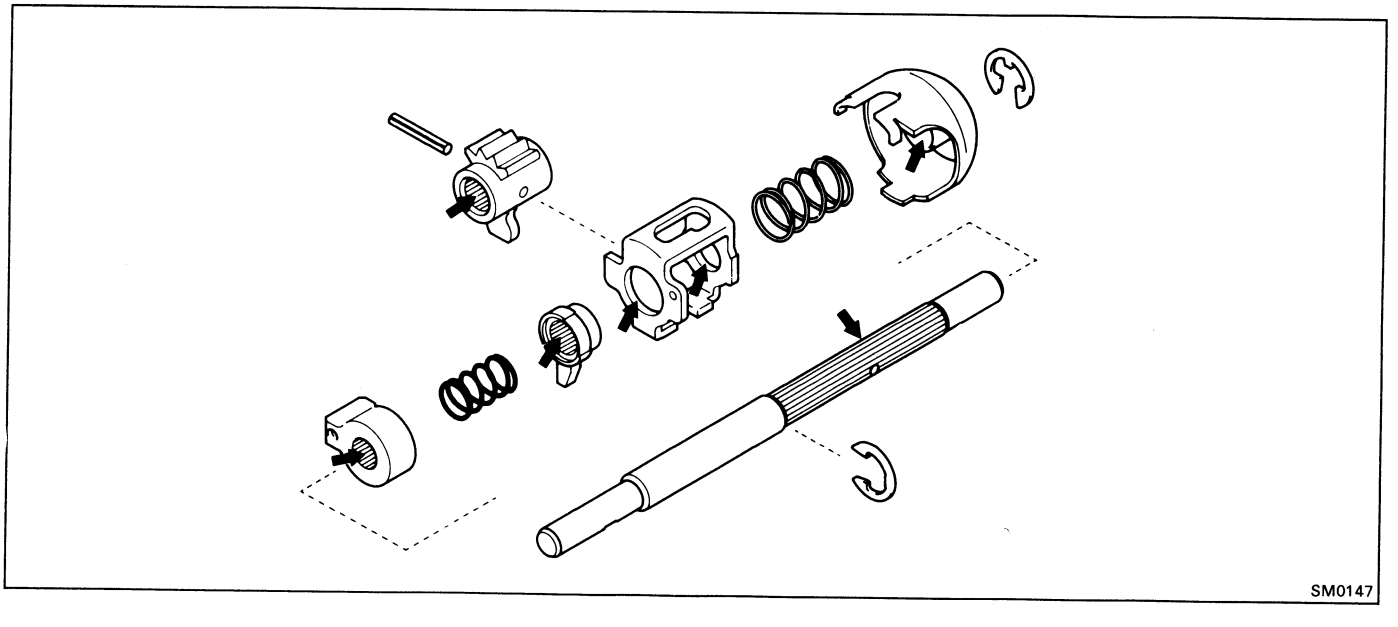

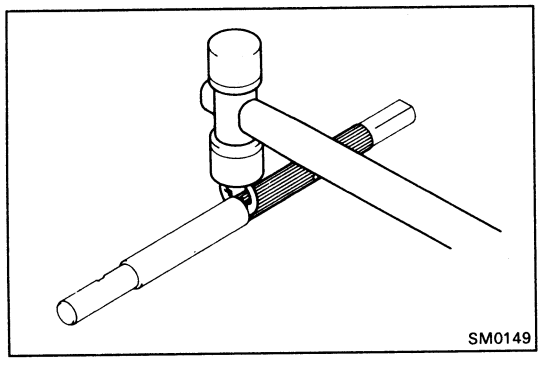

2. **INSTALL E-RING**

Using a plastic hammer, install the E-ring.

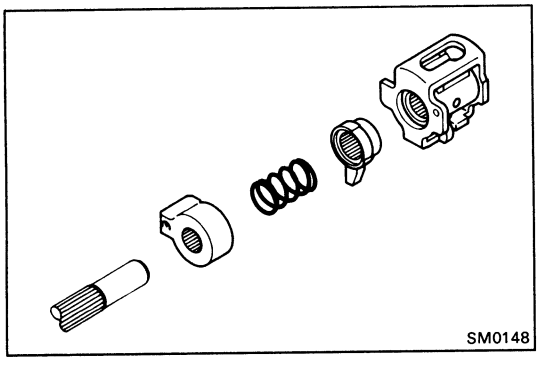

3. **INSTALL REVERSE RESTRICT PIN, SPRING, NO. 2 SHIFT INNER LEVER, NO. 1 SHIFT INNER LEVER AND INTERLOCK SHAFT**

(a) Install the reverse restrict pin, spring, No. 2 shift inner lever, No. 1 shift inner lever and interlock plate.

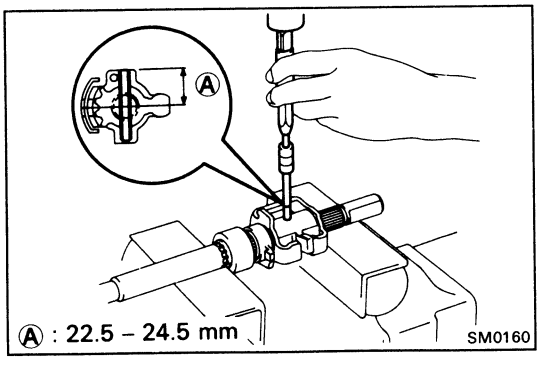

(b) Using a pin punch and hammer, drive in the slotted spring pin.

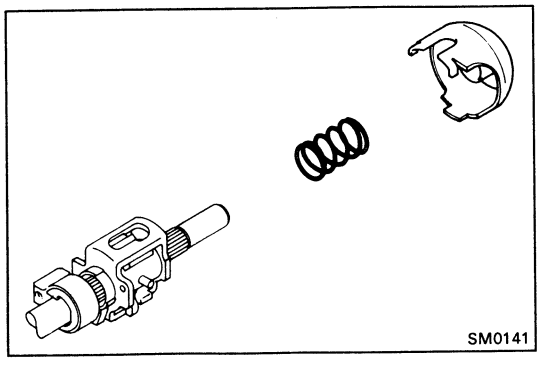

4. **INSTALL SHIFT INTERLOCK PLATE**

(a) Install the spring and interlock plate.

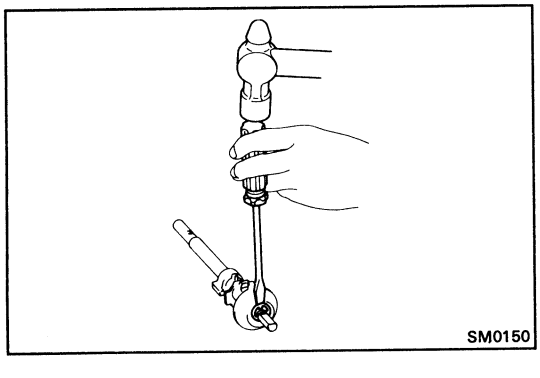

(b) Using a screwdriver and hammer, install the E-ring.

Differential

COMPONENTS

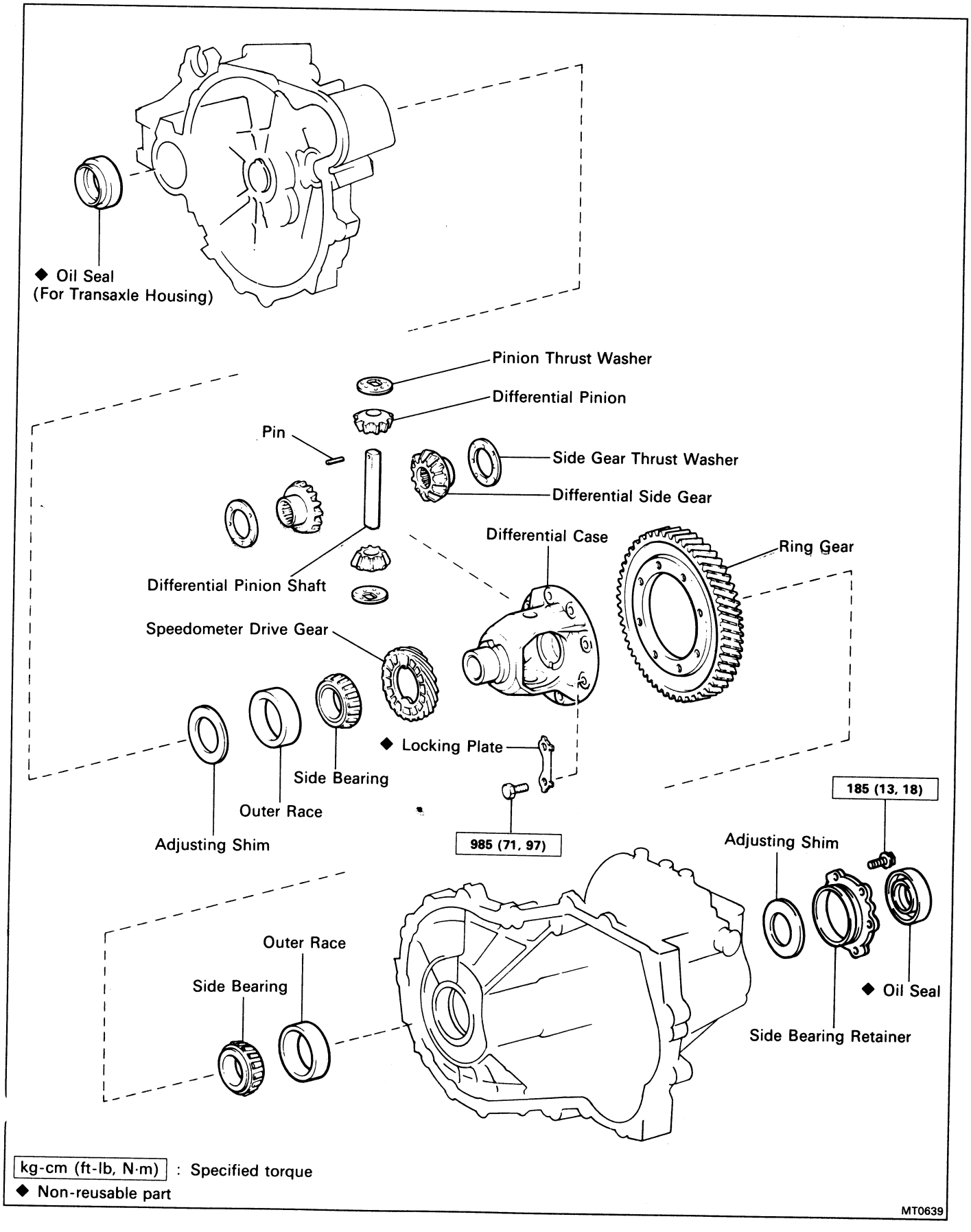

kg-cm (ft-lb, N·m) : Specified torque

◆ Non-reusable part

MT0639

DISASSEMBLY OF DIFFERENTIAL

1. REMOVE RING GEAR

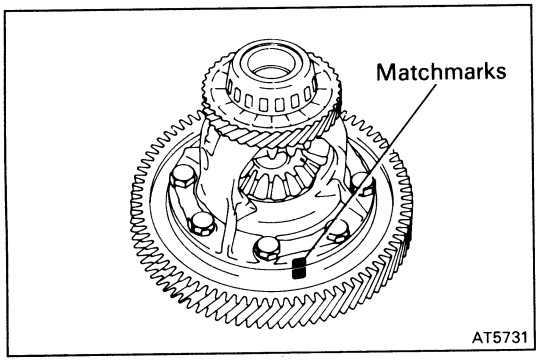

(a) Place the matchmarks on the ring gear and differential case.

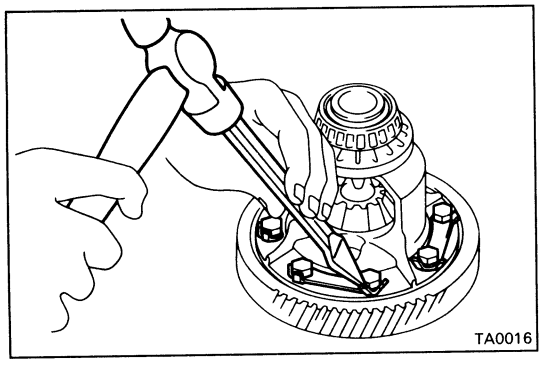

(b) Loosen the staked part of the locking plate.

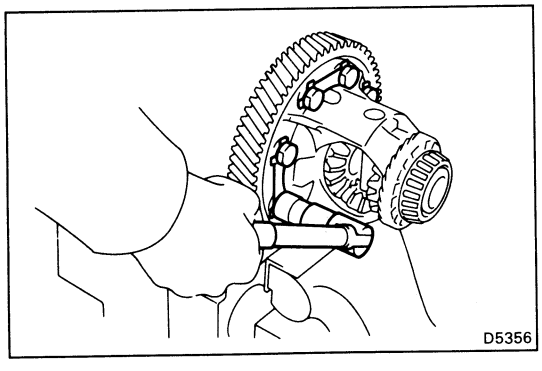

(c) Remove the eight bolts and four locking plates.

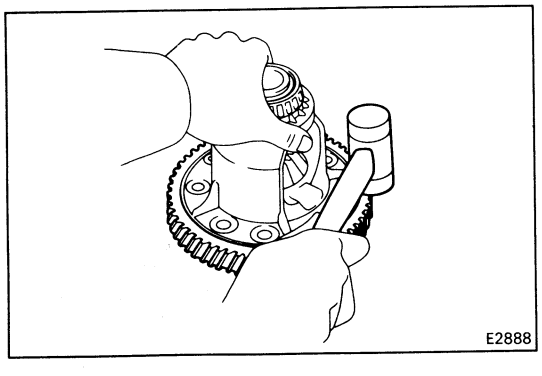

(d) Using a plastic hammer, tap on the ring gear to remove it from the case.

2. REMOVE SIDE BEARINGS FROM DIFFERENTIAL CASE

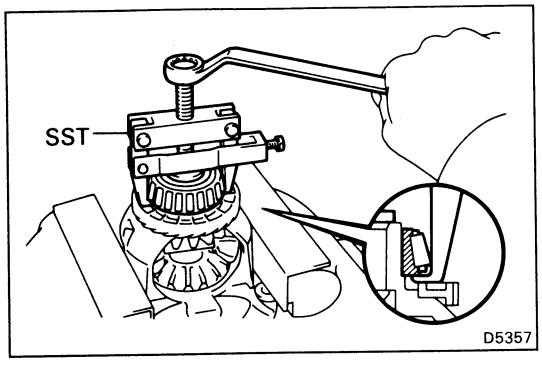

(a) Setting SST to the cut-out portion on the speedometer drive gear, remove the bearing from the differential case.

SST 09502-10012

(b) Remove the speedometer drive gear.

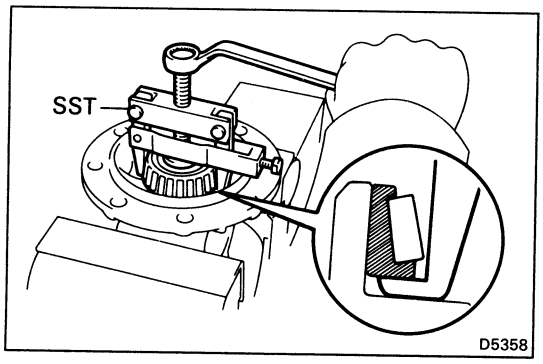

(c) Setting SST to the cut-out portion on the differential case, remove the bearing.

SST 09502-10012

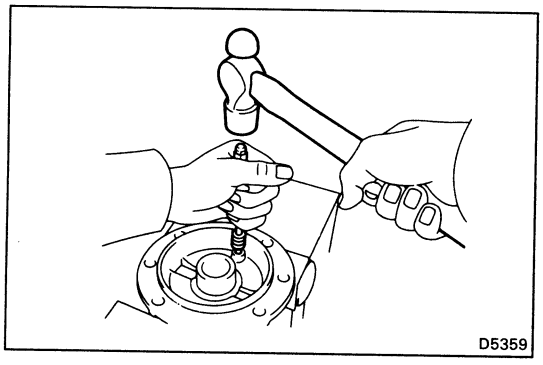

3. DISASSEMBLE DIFFERENTIAL CASE

(a) Drive out the pinion shaft lock pin from the ring gear side.

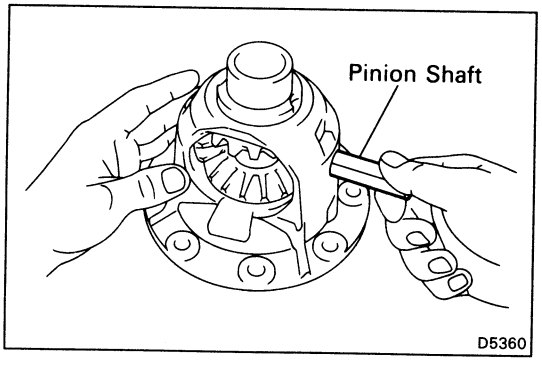

(b) Remove the pinion shaft from the case.

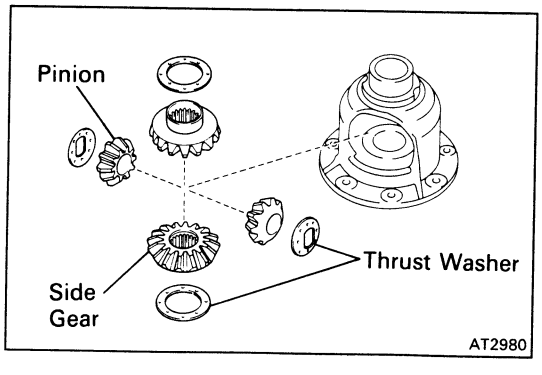

(c) Remove the two pinions, two side gears and four thrust washers.

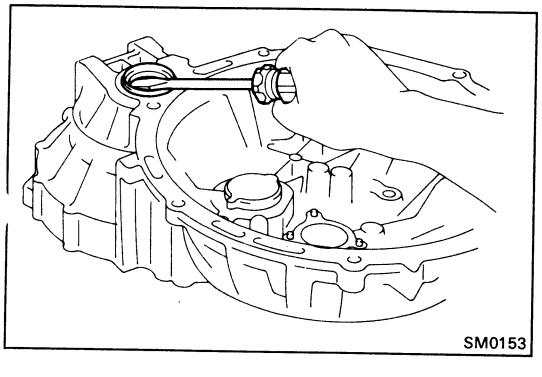

4. (Transaxle Case Side)
IF NECESSARY, REPLACE OIL SEAL AND TAPER ROLLER BEARING OUTER RACE

(a) Using a screwdriver, remove the oil seal.

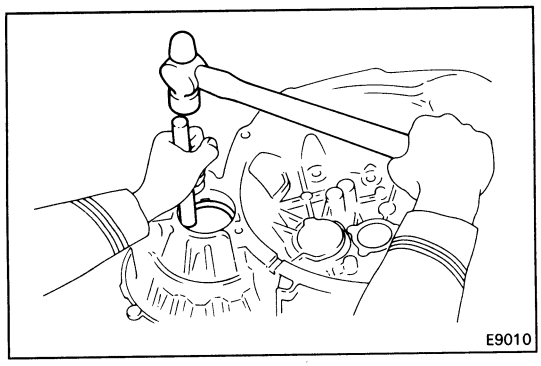

(b) Using a brass bar and hammer, drive out the bearing outer race lightly and evenly.

(c) Remove the shim.

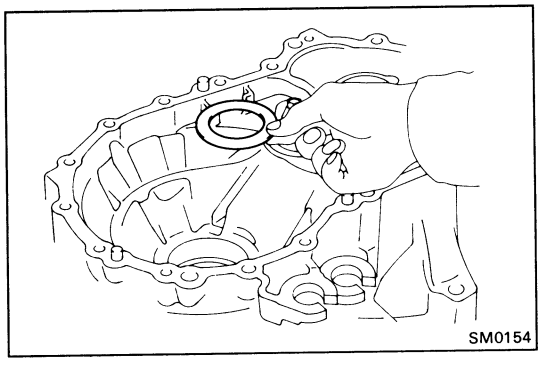

(d) Install the shim.

HINT: Shim thickness 2.4 mm (0.094 in.)

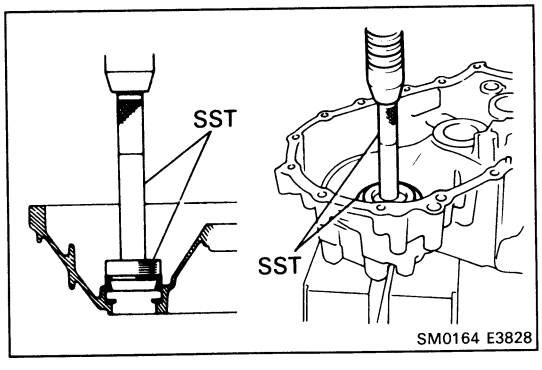

(e) Using SST and a press, install the taper roller bearing outer race.

SST 09608-20012 (09608-03020, 09608-03060)

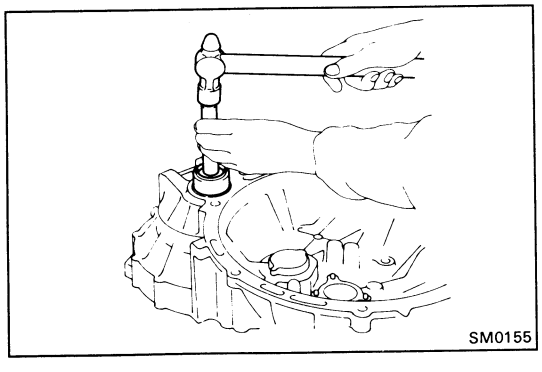

(f) Using SST and a hammer, drive in a new oil seal.

SST 09350-32014 (09351-32130, 09351-32150)

(g) Coat the lip of oil seal with MP grease.

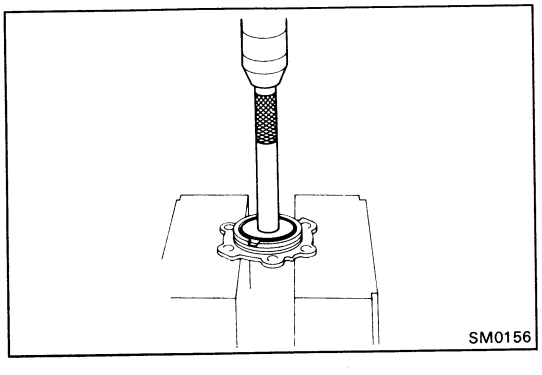

5. (Transmission Case Side)
IF NECESSARY, REPLACE DIFFERENTIAL SIDE BEARING RETAINER OIL SEAL

(a) Using SST, press out the oil seal from the retainer.

SST 09608-20012 (09608-00030, 09608-03020)

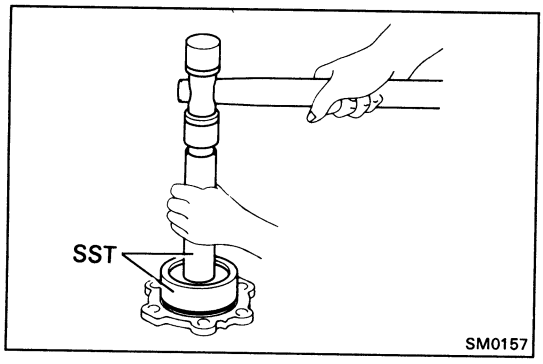

(b) Using SST, press in a new oil seal until its surface is flush with the case surface.

SST 09350-32014 (09351-32130, 09351-32150)

(c) Coat the lip of the oil seal with MP grease.

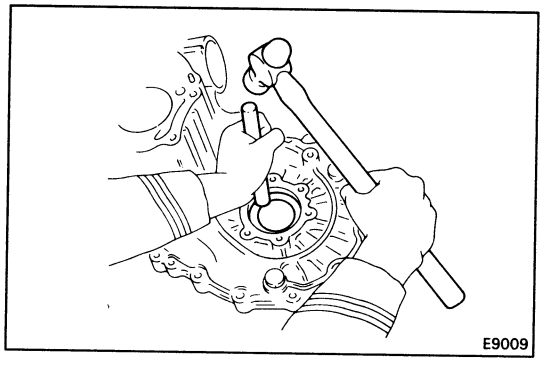

6. (Transmission Case Side)
IF NECESSARY, REPLACE TAPER ROLLER BEARING OUTER RACE

(a) Using a brass bar and hammer, drive out the bearing outer race tightly and evenly.

(b) Remove the shim.

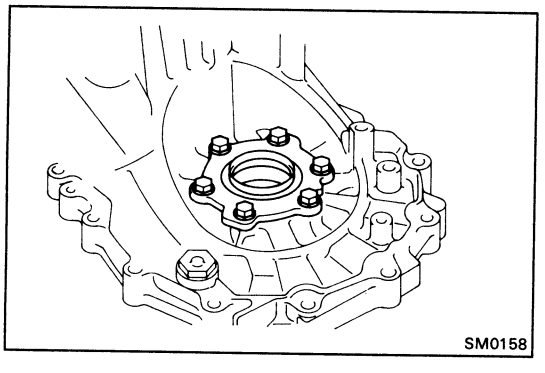

(c) Install the differential side bearing retainer without an O-ring.

(d) Install and torque the six bolts.

Torque: 185 kg-cm (13 ft-lb, 18 N·m)

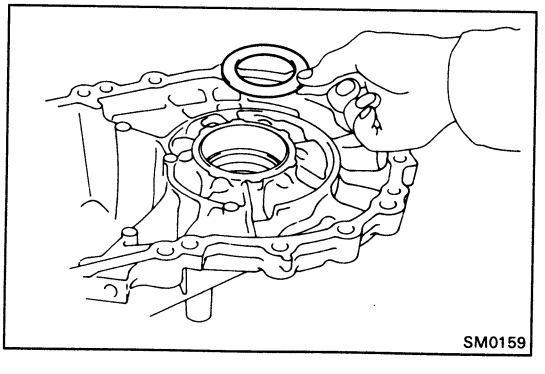

(e) Install the shim.
(See page MT-44)

HINT: First select and install a shim of lesser thickness than before.

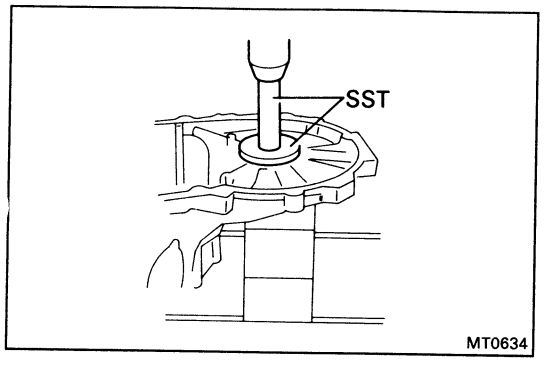

(f) Using SST and a press, install the taper roller bearing outer race.

SST 09608-20012 (09608-03020, 09608-03060)

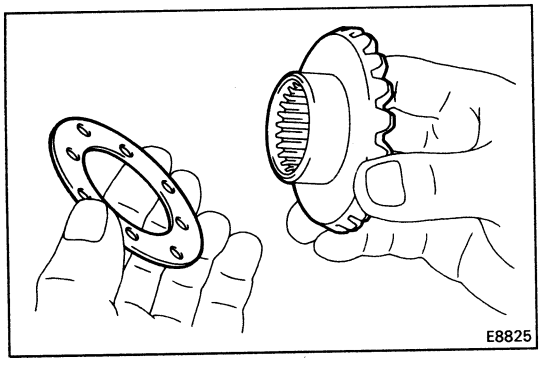

ASSEMBLY OF DIFFERENTIAL

HINT: Coat all of the sliding and rotating surface with ATF before assembly.

1. ASSEMBLE DIFFERENTIAL CASE

(a) Install the thrust washer to the side gear.

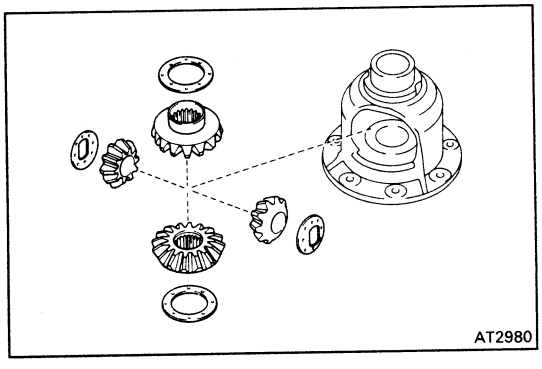

(b) Install the side gears with thrust washers, pinion gears and pinion thrust washers into the differential case.

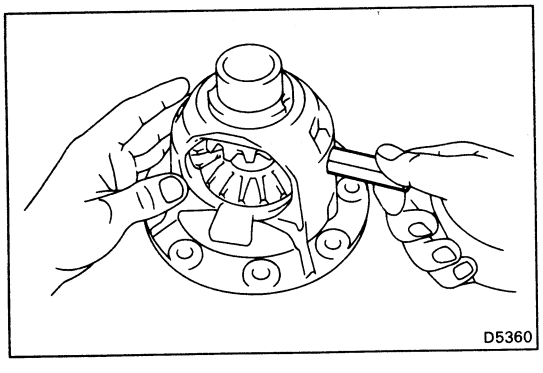

(c) Install the pinion shaft so as to align the lock pin holes on the pinion shaft and differential case.

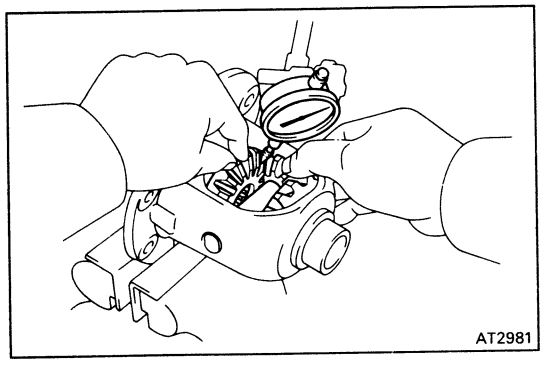

2. CHECK SIDE GEAR BACKLASH

(a) Measure the side gear backlash while holding one pinion gear toward the case.

Standard backlash: 0.05 – 0.20 mm (0.0020 – 0.0079 in.)

If the backlash is out of specification, install the correct thrust washer to the side gear.

(b) Referring to the table below, select thrust washers which will ensure that the backlash is within specification. Try to select washers of the same size of both sides.

Thrust washer thicknesses

Thickness mm (in.)	Thickness mm (in.)
0.95 (0.0374)	1.10 (0.0433)
1.00 (0.0394)	1.15 (0.0453)
1.05 (0.0413)	1.20 (0.0472)

If the backlash is not within specification, install a thrust washer of a different thickness.

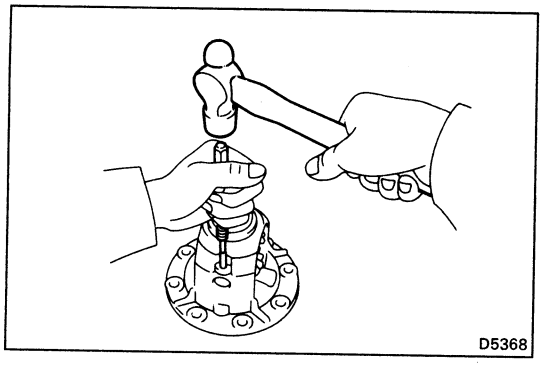

3. INSTALL LOCK PIN

(a) Using a hammer and punch, drive the lock pin through the case and hole in the pinion shaft.

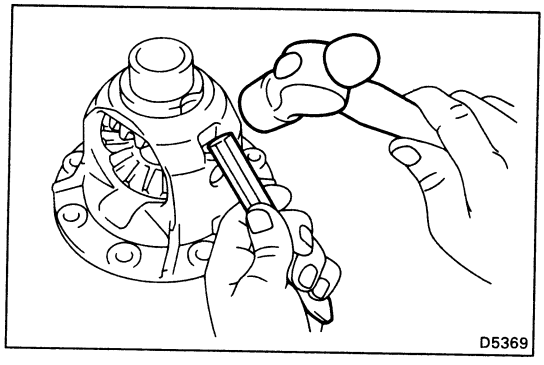

(b) Stake the differential case.

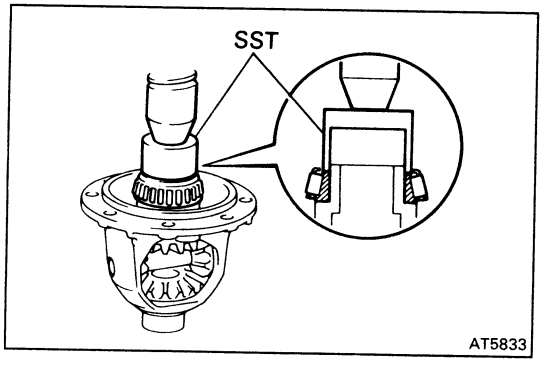

4. INSTALL SIDE BEARINGS TO DIFFERENTIAL CASE

(a) Using SST and press, press the side bearing into the differential case.

SST 09710-30030 (09710-03160)

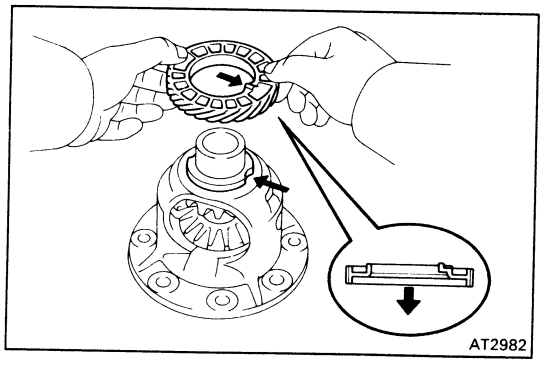

(b) Install the speedometer drive gear to the differential case.

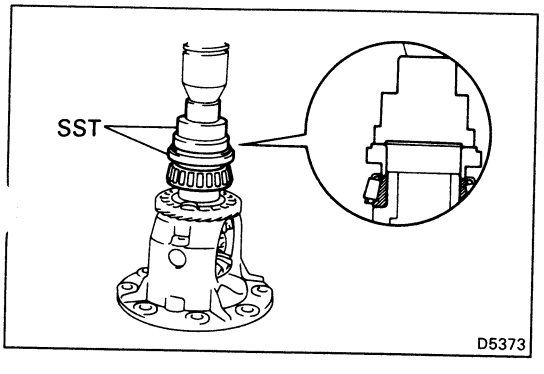

(c) Using SST and press, press the side bearing into the differential case.

SST 09350-32014 (09351-32090, 09351-32120)

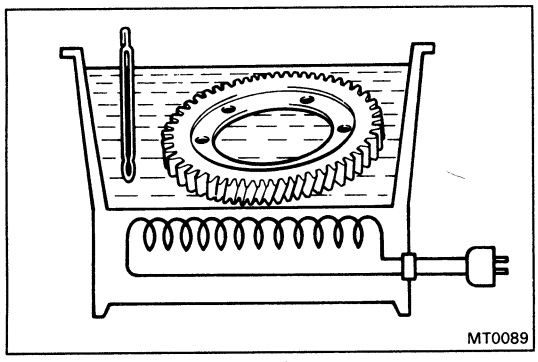

5. INSTALL RING GEAR TO DIFFERENTIAL

(a) Clean the contact surface of the differential case.

(b) Heat the ring gear to about 212°F (100°C) in an oil bath.

NOTICE: Do not heat the ring gear above 230°F (110°C).

(c) Clean the contact surface of the ring gear with cleaning solvent.

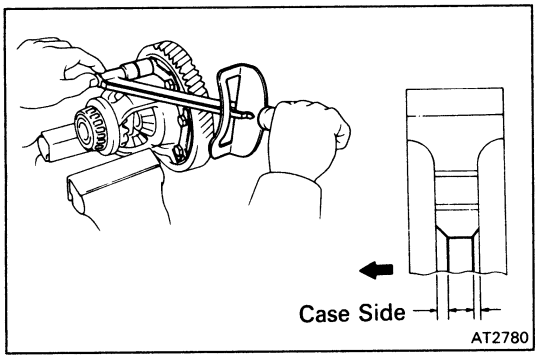

(d) Quickly install the ring gear on the differential case.

(e) Install new locking plates and set bolts.

HINT: Tighten the set bolts uniformly and a little at a time. Torque the bolts.

Torque: 985 kg-cm (71 ft-lb, 97 N·m)

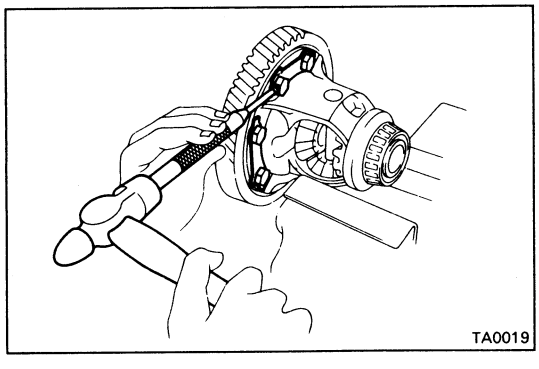

(f) Using a hammer and drift punch, stake the locking plates.

HINT: Stake one claw flush with the flat surface of the nut. For the claw contacting the protruding portion of the nut, stake only the half on the tightened side.

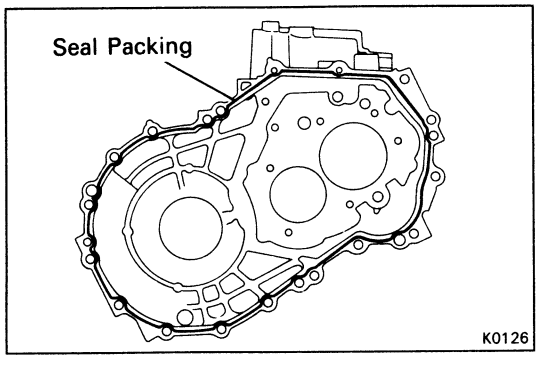

6. ADJUST SIDE BEARING PRELOAD

(a) Remove any packing material and be careful not to get oil on the contacting surfaces of the transaxle housing or transmission case.

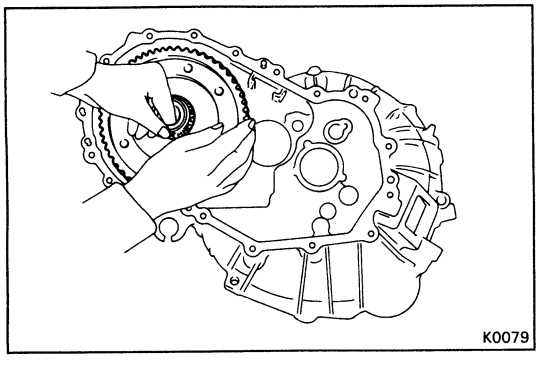

(b) Install the differential to the transaxle case.

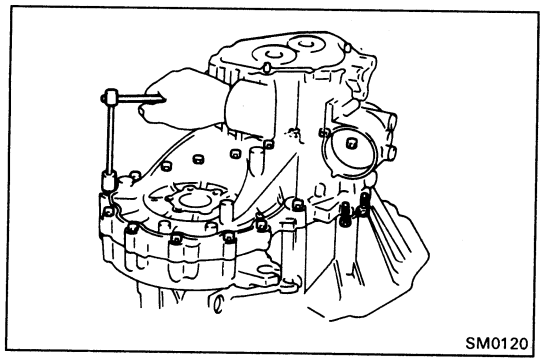

(c) Install the transmission case to the transaxle case.

(d) Install and torque the seventeen bolts.

Torque: 300 kg-cm (22 ft-lb, 29 N·m)

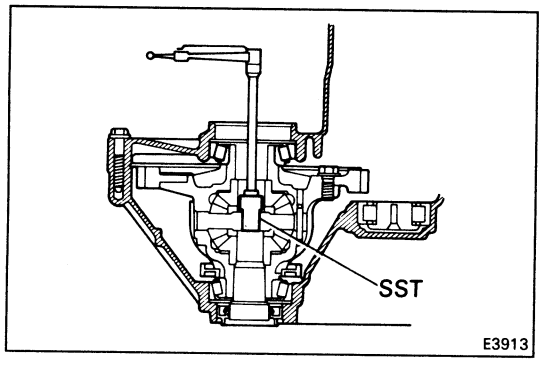

(e) Using SST, rotate the differential in both directions to snug the bearing down.

SST 09564-32011

(f) Using SST and a torque meter, measure the preload of the side bearing.

SST 09564-32011

Preload (at starting):
8 – 16 kg-cm (6.9 – 13.9 in.-lb, 0.8 – 1.6 N·m)

If the preload is not within specification, remove the bearing retainer from the case. Re-select the transmission case side adjusting shim.

mm (in.)

Mark	Thickness	Mark	Thickness	Mark	Thickness	Mark	Thickness	Mark	Thickness
1	1.90 (0.0748)	5	2.10 (0.0827)	9	2.30 (0.0906)	13	2.50 (0.0984)	17	2.70 (0.1063)
2	1.95 (0.0768)	6	2.15 (0.0846)	10	2.35 (0.0925)	14	2.55 (0.1004)	18	2.75 (0.1083)
3	2.00 (0.0787)	7	2.20 (0.0866)	11	2.40 (0.0945)	15	2.60 (0.1024)	19	2.80 (0.1102)
4	2.05 (0.0807)	8	2.25 (0.0886)	12	2.45 (0.0965)	16	2.65 (0.1043)		

HINT: The preload will change about 3 – 4 kg-cm (2.6 – 3.5 in.-lb, 0.3 – 0.4 N·m) with each shim thickness.

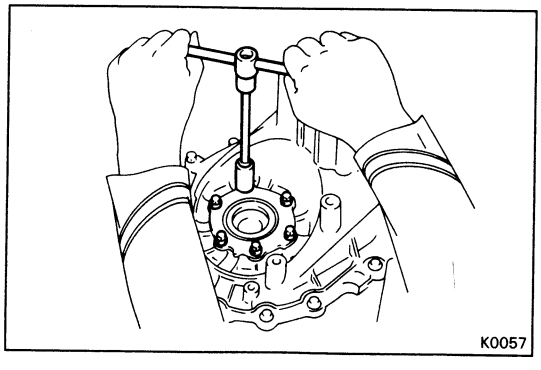

7. REMOVE DIFFERENTIAL SIDE BEARING RETAINER AND SHIM

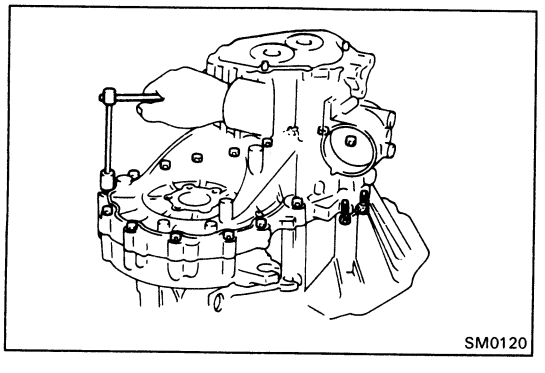

8. REMOVE TRANSMISSION CASE

Remove the seventeen bolts and tap off the case with plastic hammer.

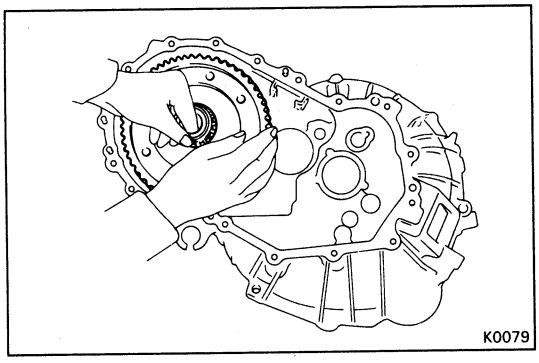

9. REMOVE DIFFERENTIAL ASSEMBLY FROM TRANSAXLE CASE

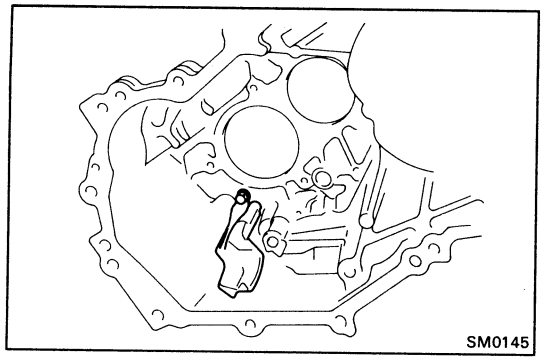

INSTALLATION OF COMPONENT PARTS

(See pages MT-7 to 9)

HINT: Coat all of the sliding and rotating surface with ATF before assembly.

1. INSTALL AND TORQUE NO. 1 OIL RECEIVER PIPE TO TRANSMISSION CASE

Torque: 75 kg-cm (65 in.-lb, 7.4 N·m)

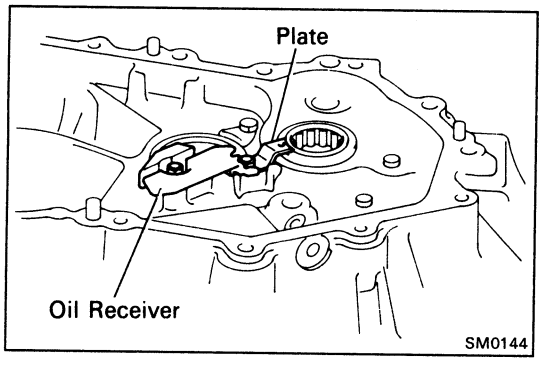

2. INSTALL TRANSAXLE OIL RECEIVER AND PLATE TO TRANSAXLE CASE

(a) Install and torque the oil receiver.

Torque: 75 kg-cm (65 in.-lb, 7.4 N·m)

(b) Install and torque the plate.

Torque: 185 kg-cm (13 ft-lb, 18 N·m)

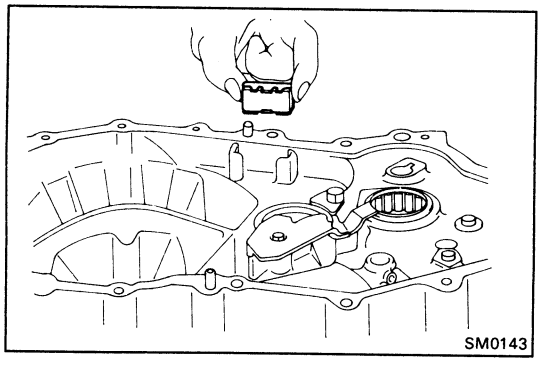

3. INSTALL MAGNET

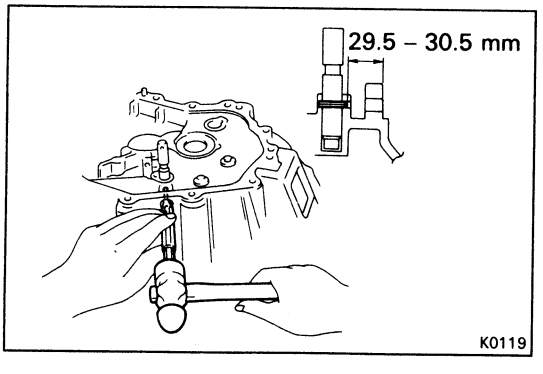

4. INSTALL NO. 2 FORK SHAFT

(a) Insert No. 2 fork shaft to the transaxle case and align the slotted spring pin hole.

(b) Using a pin punch and hammer, drive in a slotted spring pin.

Drive in depth: 29.5 – 30.5 mm (1.16 – 1.20 in.)

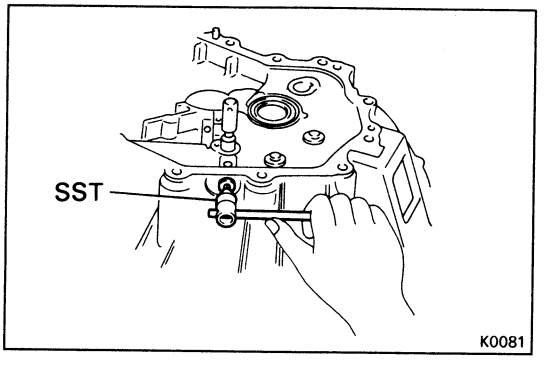

(c) Apply sealant to the plug threads.

Sealant: Part No. 08833-00080, THREE BOND 1344, LOCTITE 242 or equivalent

(d) Using SST, install and torque the screw plug.

SST 09313-30021

Torque: 130 kg-cm (9 ft-lb, 13 N·m)

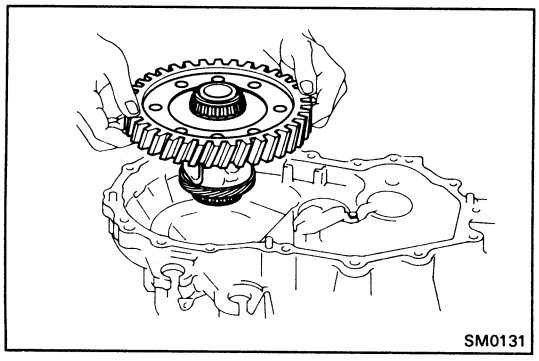
SM0131

5. INSTALL DIFFERENTIAL ASSEMBLY

Install the differential assembly to the transaxle case.

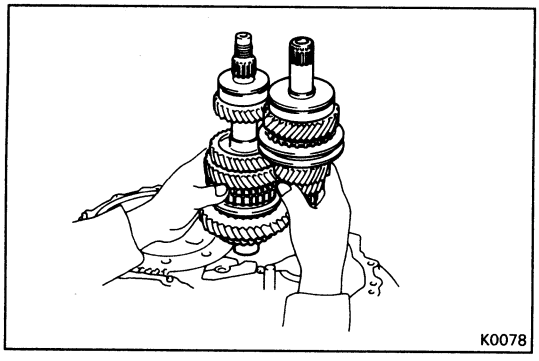
K0078

6. INSTALL INPUT AND OUTPUT SHAFTS ASSEMBLY

Install the input and output shafts together.

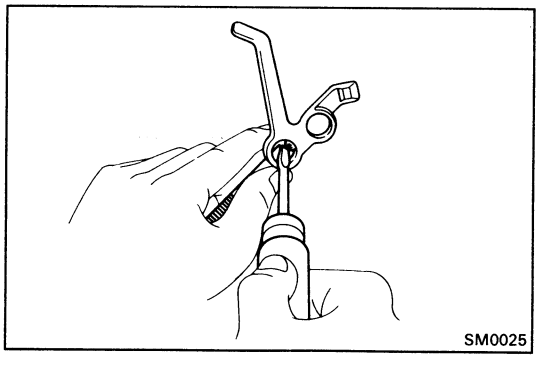
SM0025

7. INSTALL REVERSE SHIFT FORK AND INTERLOCK PIN

(a) Insert interlock pin into the reverse shift fork hole.

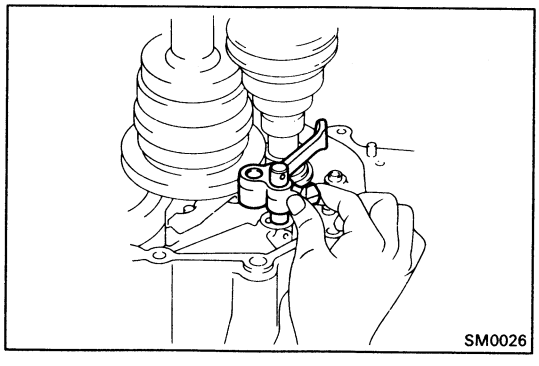
SM0026

(b) Install the reverse shift fork onto No. 2 fork shaft.

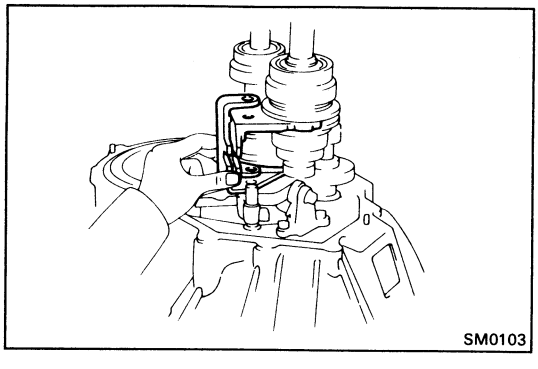
SM0103

8. INSTALL NO. 1 AND NO. 2 SHIFT FORKS, NO. 1 SHIFT HEAD AND NO. 1 FORK SHAFT

(a) Place No. 1 and No. 2 shift forks into the groove of No. 1 and No. 2 hub sleeves.

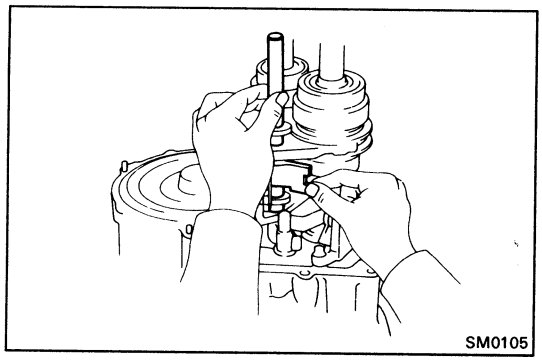

(b) Hold the No. 1 shift head and insert No. 1 fork shaft into the transaxle case through No. 1 and No. 2 shift fork, No. 1 shift head and reverse shift fork.

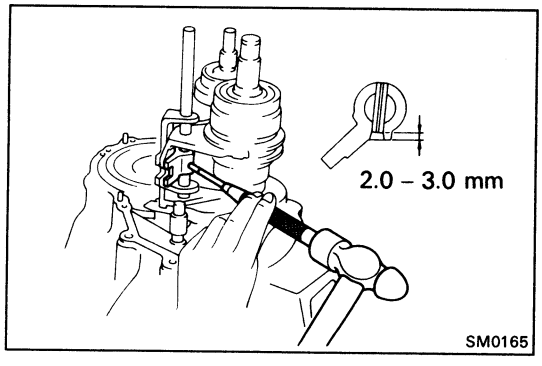

(c) Using a pin punch and hammer, drive the slotted spring pin into No. 1 shift head.

Drive in depth: 2.0 – 3.0 mm (0.08 – 0.12 in.)

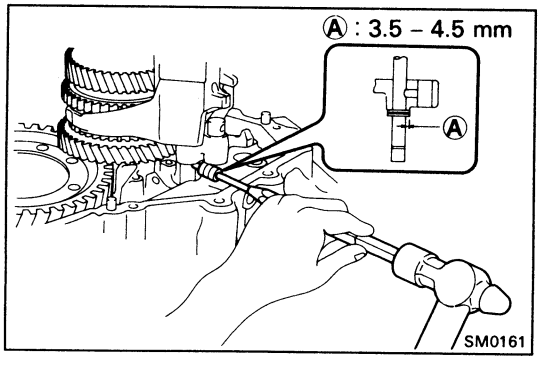

(d) Shift the shift fork shaft into reverse.

(e) Using a pin punch and hammer, drive the slotted spring pin into No. 1 fork shaft.

Drive in depth: 3.5 – 4.5 mm (0.14 – 0.18 in.)

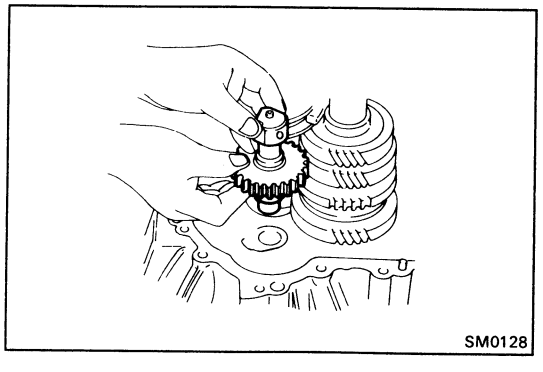

9. INSTALL REVERSE IDLER GEAR AND SHAFT

(a) Install the reverse idler gear shaft to the reverse idler gear.

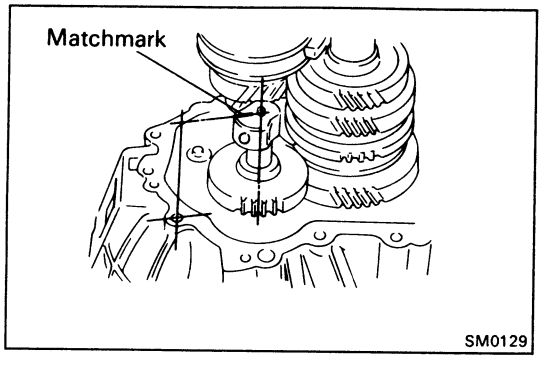

(b) Install the reverse idler gear and shaft to transaxle case.

(c) Align the matchmark on the shaft end with the bolt hole in the transaxle case, as shown in the illustration.

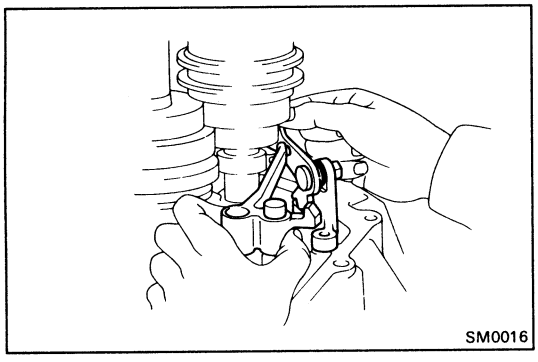
SM0016

10. INSTALL REVERSE SHIFT ARM

(a) Put the reverse shift arm pivot into the reverse shift fork and install the reverse shift arm to the transaxle case.

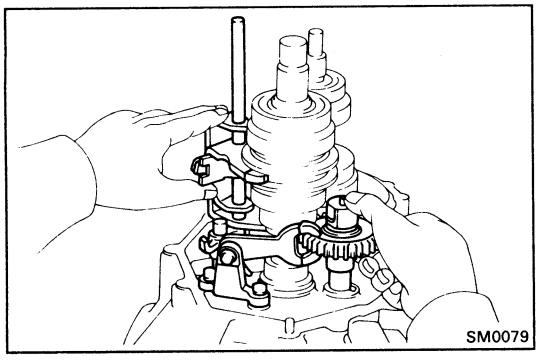
SM0079

(b) Shift the shift fork shaft into reverse.

(c) Install and torque the two bolts.

Torque: 185 kg-cm (13 ft-lb, 18 N·m)

(d) Shift the shift fork shaft into neutral position.

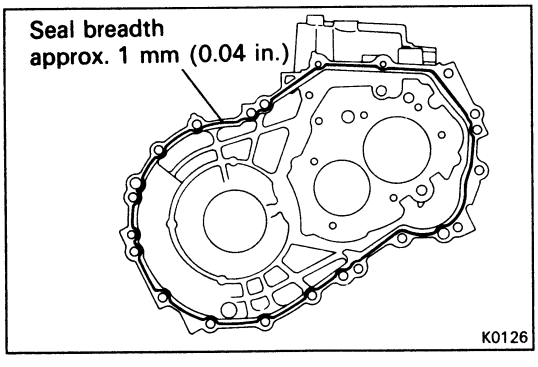

K0126

11. INSTALL TRANSMISSION CASE

(a) Remove any packing material and be careful not to drop oil on the contacting surface of the transmission case or transaxle case.

(b) Apply seal packing to the transmission case as shown in the figure.

Seal packing: Part No. 08826-00090, THREE BOND 1281 or equivalent

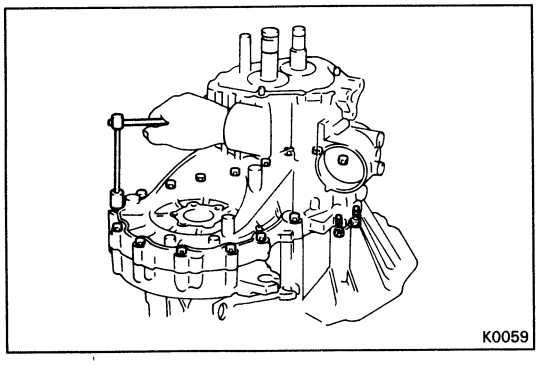
K0059

(c) Install and torque the seventeen bolts.

Torque: 300 kg-cm (22 ft-lb, 29 N·m)

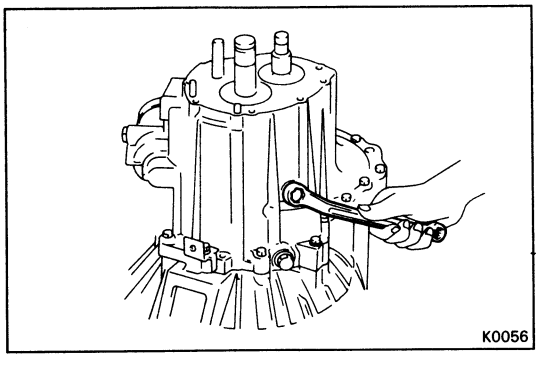
K0056

12. INSTALL REVERSE IDLER GEAR SHAFT LOCK BOLT

(a) Apply sealant to the bolt threads.

Sealant: Part No. 08833-00080, THREE BOND 1344, LOCTITE 242 or equivalent

(b) Install and torque the bolt.

Torque: 300 kg-cm (22 ft-lb, 29 N·m)

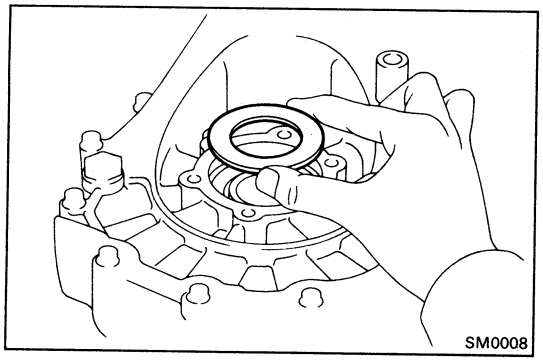

13. INSTALL SIDE BEARING RETAINER

(a) Install the shim.

HINT: Install the previously selected shim.
(See page MT-45)

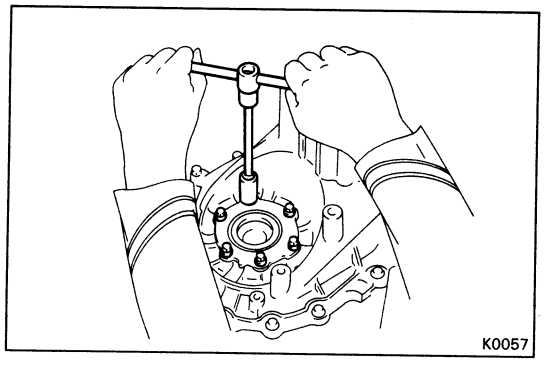

(b) Install a new O-ring on the side bearing retainer.

(c) Install the side bearing retainer.

(d) Apply sealant to the bolt threads.

Sealant: Part No. 08833-00080, THREE BOND 1344, LOCTITE 242 or equivalent

(e) Install and torque the six bolts.

Torque: 185 kg-cm (13 ft-lb, 18 N·m)

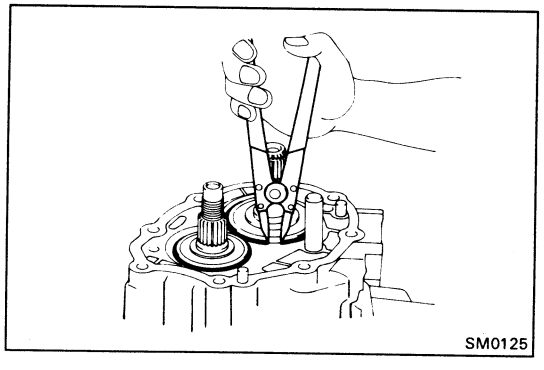

14. INSTALL SNAP RINGS

Using snap ring pliers, install the snap rings to the input and output shaft rear bearing.

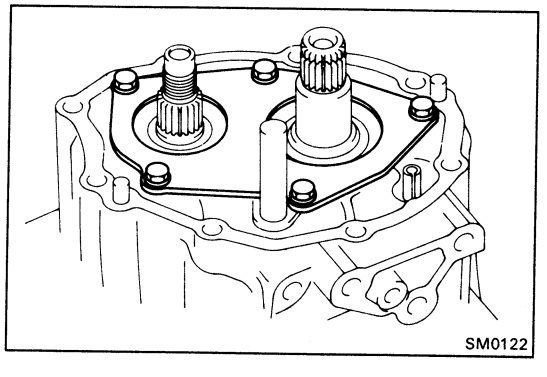

15. INSTALL REAR BEARING RETAINER

(a) Apply sealant to the bolt threads.

Sealant: Part No. 08833-00070, THREE BOND 1324 or equivalent

(b) Install and torque the five bolts.

Torque: 210 kg-cm (15 ft-lb, 21 N·m)

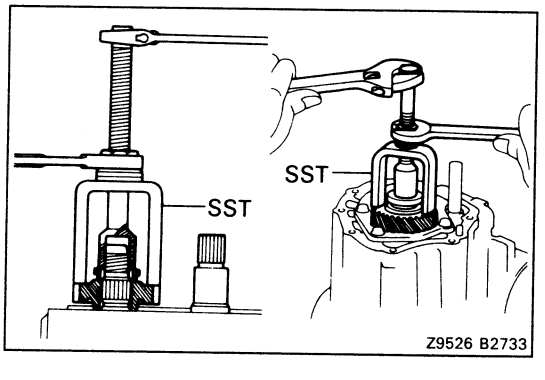

16. INSTALL FIFTH DRIVEN GEAR

Using SST, install the fifth driven gear.

SST 09309-32050

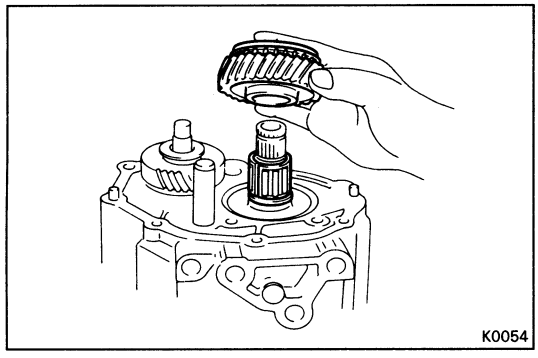
K0054

17. INSTALL SPACER, NEEDLE ROLLER BEARINGS, FIFTH GEAR AND SYNCHRONIZER RING

(a) Install the spacer.

(b) Install the needle roller bearings.

(c) Install the fifth gear with the synchronizer ring.

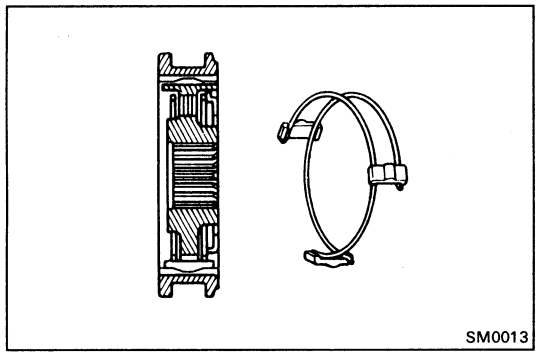
SM0013

18. INSERT NO. 3 CLUTCH HUB INTO HUB SLEEVE

(a) Install the clutch hub and shifting keys to the hub sleeve.

(b) Install the shifting key springs under the shifting keys.

NOTICE: Install the key springs positioned so that their end gaps are not in line.

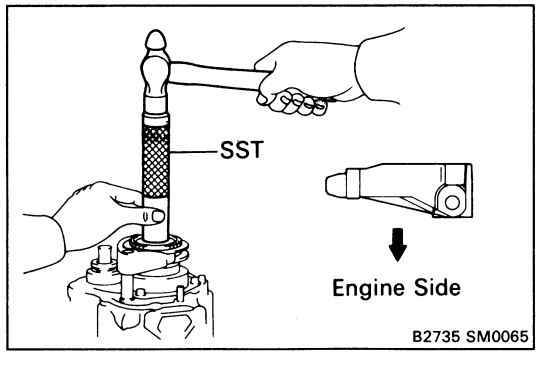

B2735 SM0065

19. INSTALL NO. 3 HUB SLEEVE ASSEMBLY WITH NO. 3 SHIFT FORK

(a) Support the tip of the input shaft with a spacer or such to raise the transaxle assembly.

(b) Install the No. 3 shift fork set bolt.

Torque: 185 kg-cm (13 ft-lb, 18 N·m)

(c) Using SST, drive in No. 3 hub sleeve with shift fork.

SST 09612-22011

NOTICE: Align the synchronizer ring slots with the shifting keys.

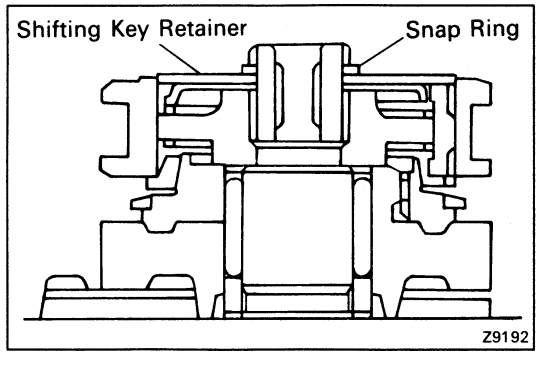

Z9192

20. INSTALL SHIFTING KEY RETAINER

Install the shifting key retainer as shown in the figure.

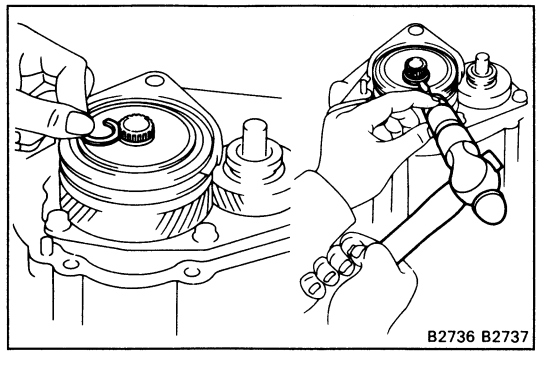
B2736 B2737

21. INSTALL SNAP RING

Select a snap ring that will allow minimum axial play and install it on the shaft.

Mark	Thickness mm (in.)	Mark	Thickness mm (in.)
1	1.60–1.65(0.0630–0.0650)	9	2.00–2.05(0.0787–0.0807)
2	1.65–1.70(0.0650–0.0669)	10	2.05–2.10(0.0807–0.0827)
3	1.70–1.75(0.0669–0.0689)	11	2.10–2.15(0.0827–0.0846)
4	1.75–1.80(0.0689–0.0709)	12	2.15–2.20(0.0846–0.0866)
5	1.80–1.85(0.0709–0.0728)	13	2.20–2.25(0.0866–0.0886)
6	1.85–1.90(0.0728–0.0748)	14	2.25–2.30(0.0886–0.0906)
7	1.90–1.95(0.0748–0.0768)	15	2.30–2.35(0.0906–0.0925)
8	1.95–2.00(0.0768–0.0787)		

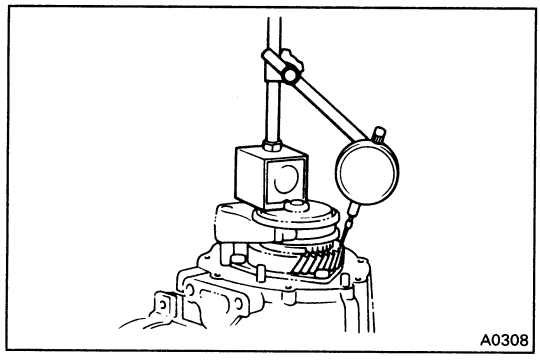

22. MEASURE FIFTH GEAR THRUST CLEARANCE

Using a dial indicator, measure the thrust clearance.

Standard clearance: 0.20 – 0.40 mm (0.0079 – 0.0157 in.)

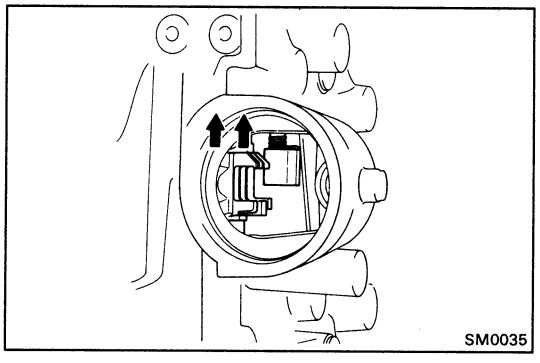

23. INSTALL LOCK NUT

(a) Engage the gear double meshing.

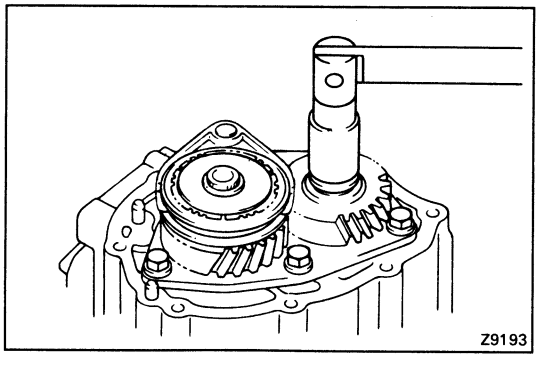

(b) Install and torque the nut.

Torque: 1,250 kg-cm (90 ft-lb, 123 N·m)

HINT: The lock nut has LH threads.

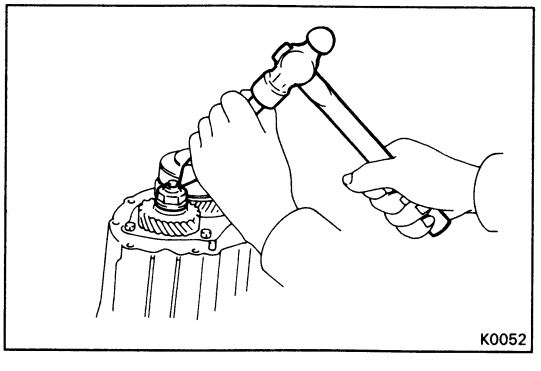

(c) Stake the lock nut.

(d) Disengage the gear double meshing.

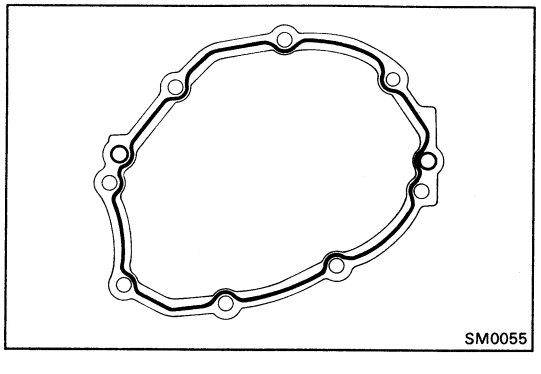

24. INSTALL TRANSMISSION CASE COVER

(a) Remove any packing material and be careful not to drop oil on the contacting surfaces of the transmission case cover.

(b) Apply seal packing to the transmission case as shown in the figure.

Seal packing: Part No. 08826-00090, THREE BOND 1281 or equivalent

HINT: Install the transmission case cover as soon as the seal packing is applied.

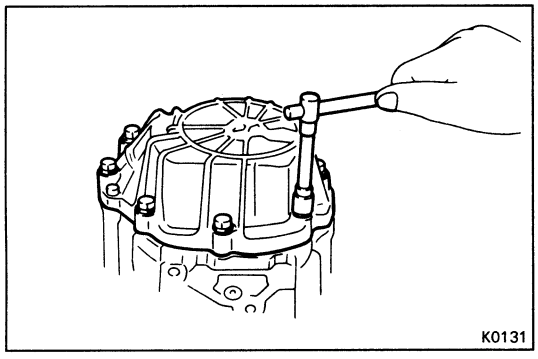
K0131

(c) Apply sealant to the bolt threads.

Sealant: Part No. 08833-00080, THREE BOND 1344, LOCTITE 242 or equivalent

(d) Install and torque the eight bolts.

Torque: 300 kg-cm (22 ft-lb, 29 N·m)

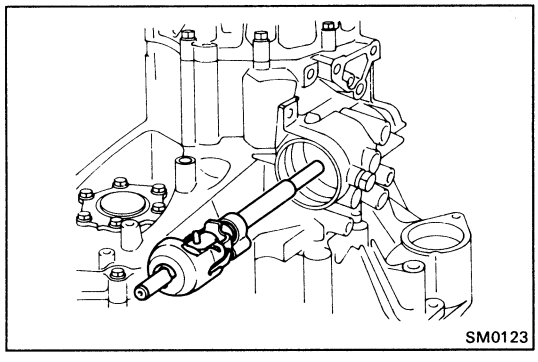
SM0123

25. INSTALL SHIFT AND SELECT LEVER SHAFT ASSEMBLY

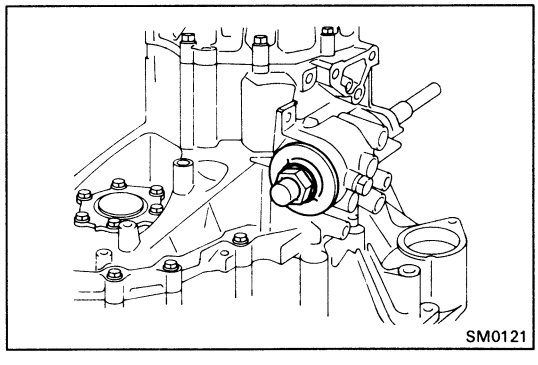
SM0121

26. INSTALL CONTROL SHAFT COVER

(a) Coat a new O-ring with ATF and install it to the control shaft cover.

(b) Install and torque the control shaft cover.

Torque: 335 kg-cm (24 ft-lb, 33 N·m)

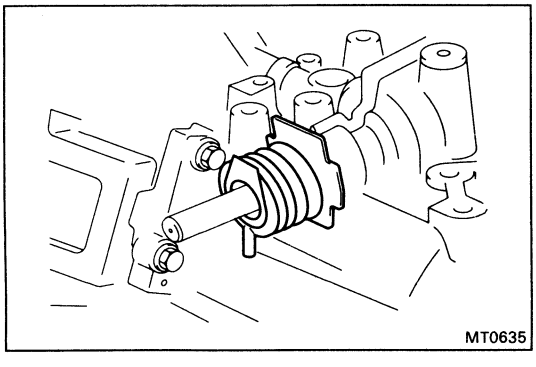
MT0635

27. INSTALL SHIFT LEVER

(a) Install the boot to the control shaft oil seal.

HINT: Make sure to install the boot in the correct direction. Position the air bleed of the boot downward.

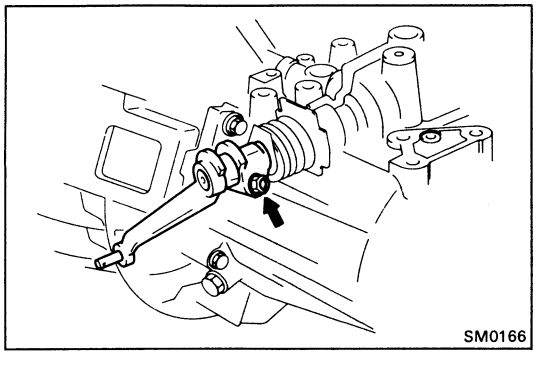
SM0166

(b) Fit the pin's groove into the shaft's notch and tap on with a hammer.

(c) Install and torque the nut.

Torque: 120 kg-cm (9 ft-lb, 12 N·m)

(d) Install the boot to the shift lever.

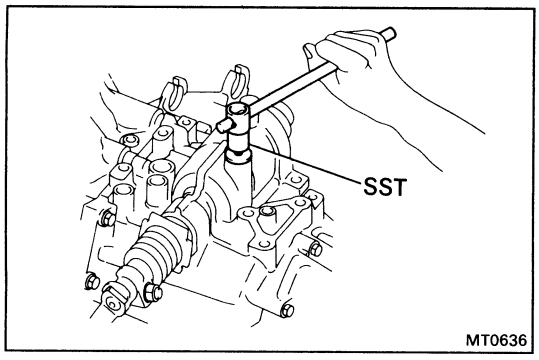

28. INSTALL NO. 2 LOCK BALL ASSEMBLY

(a) Apply liquid sealant to the plug.

Sealant: Part No. 08833-00080, THREE BOND 1344, LOCTITE 242 or equivalent

(b) Using SST, install and torque the plug.

SST 09313-30021

Torque: 230 kg-cm (17 ft-lb, 23 N·m)

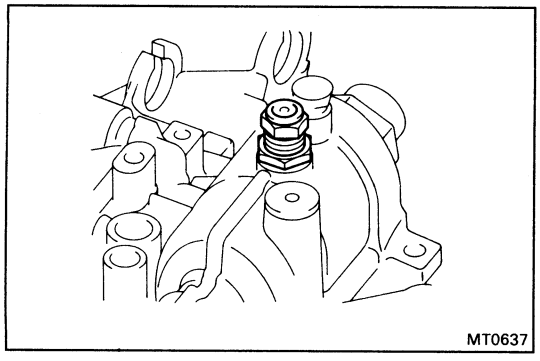

29. INSTALL NO. 1 LOCK BALL ASSEMBLY

(a) Fully loosen the lock nut.

(b) Fully screw in the lock ball.

(c) Loosen the lock ball to where the play at the shift outer lever tip is 0.1 – 0.5 mm (0.004 – 0.020 in.)

(d) Hold the lock ball and tighten the lock nut.

Torque: 375 kg-cm (27 ft-lb, 37 N·m)

(e) Check the shift outer lever tip play.

Lever tip play: 0.1 – 0.5 mm (0.004 – 0.020 in.)

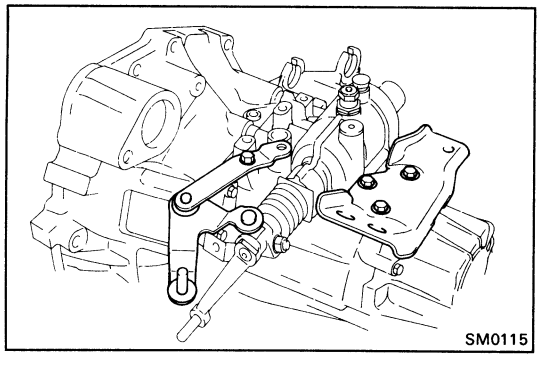

30. INSTALL SELECTING BELL CRANK ASSEMBLY AND ENGINE MOUNTING BRACKET

(a) Install and torque the selecting bell crank.

Torque: 200 kg-cm (14 ft-lb, 20 N·m)

(b) Install and torque the engine mounting bracket.

Torque: 530 kg-cm (38 ft-lb, 52 N·m)

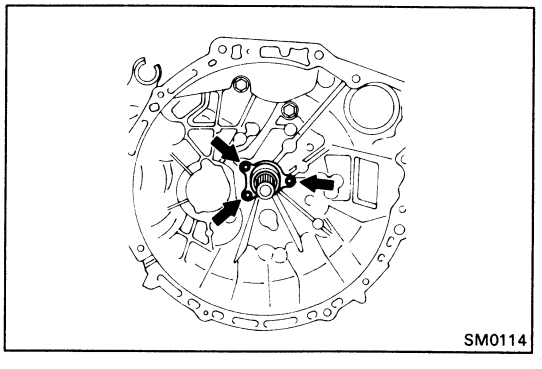

31. INSTALL RELEASE BEARING RETAINER

Torque: 75 kg-cm (65 in.-lb, 7.4 N·m)

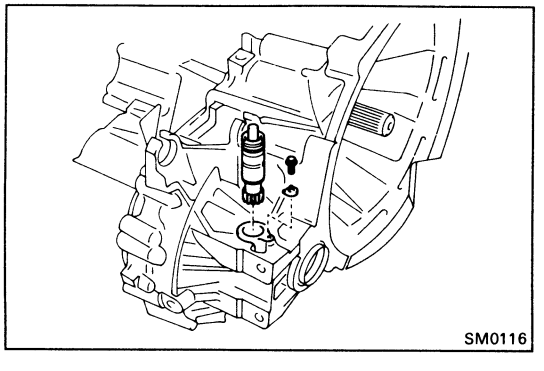

32. INSTALL SPEEDOMETER DRIVEN GEAR

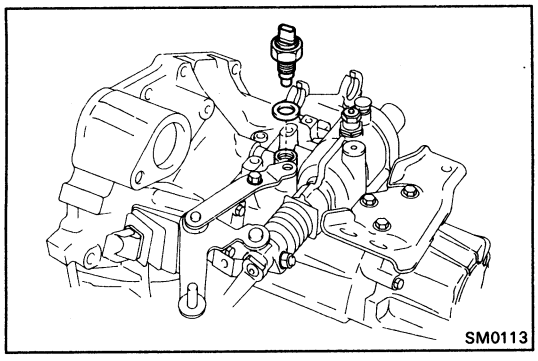

33. INSTALL BACK-UP LIGHT SWITCH

Torque: 450 kg-cm (33 ft-lb, 44 N·m)

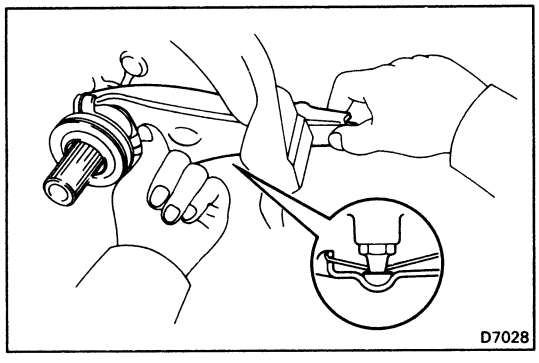

34. INSTALL RELEASE BEARING FORK AND BEARING

Apply molybdenum disulphide lithium base grease to the following parts:

- Input shaft spline
- Release fork contact surface

(E153 TRANSAXLE)
REMOVAL OF COMPONENT PARTS
COMPONENTS

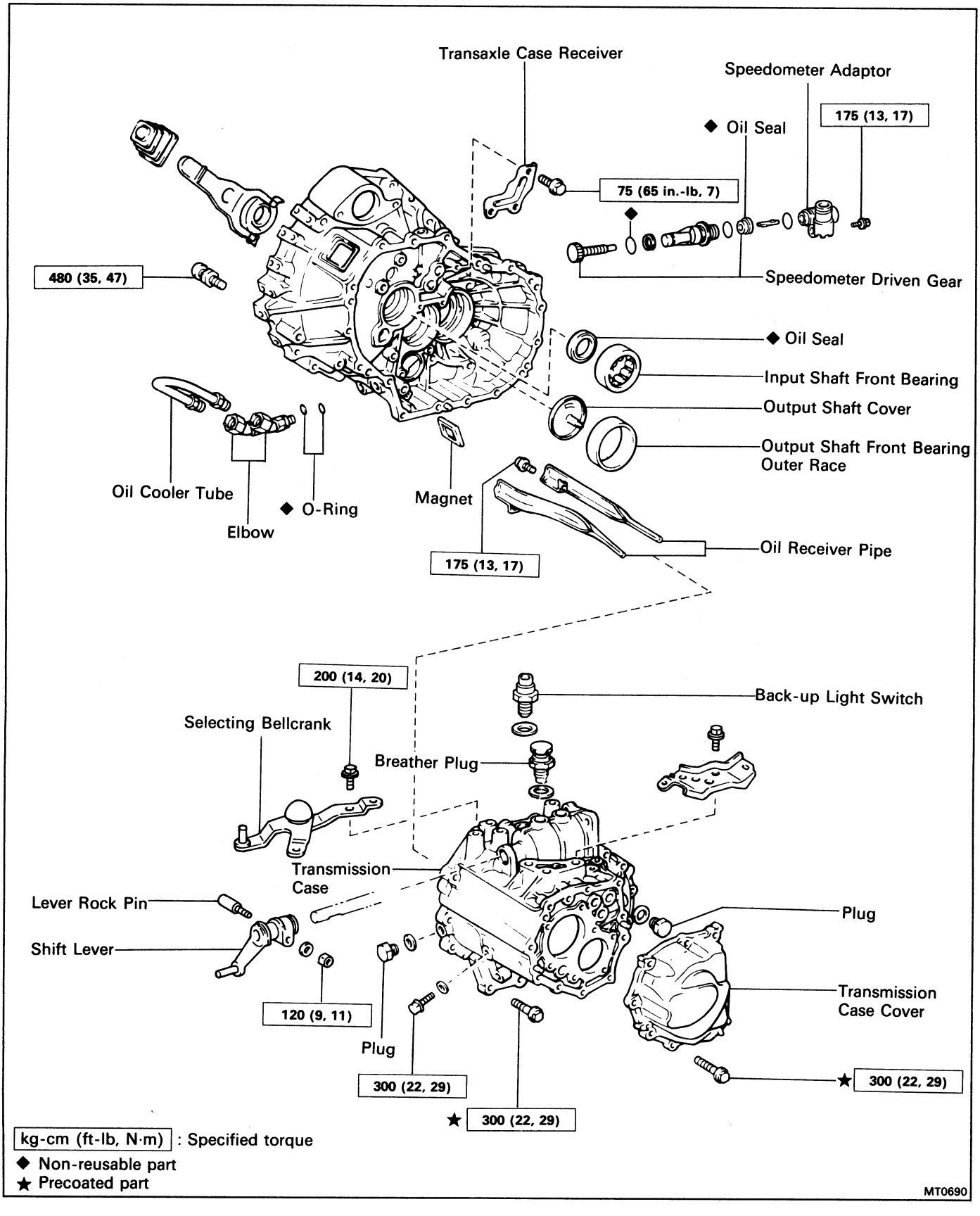

kg-cm (ft-lb, N·m) : Specified torque
◆ Non-reusable part
★ Precoated part

MT0690

COMPONENTS (Cont'd)

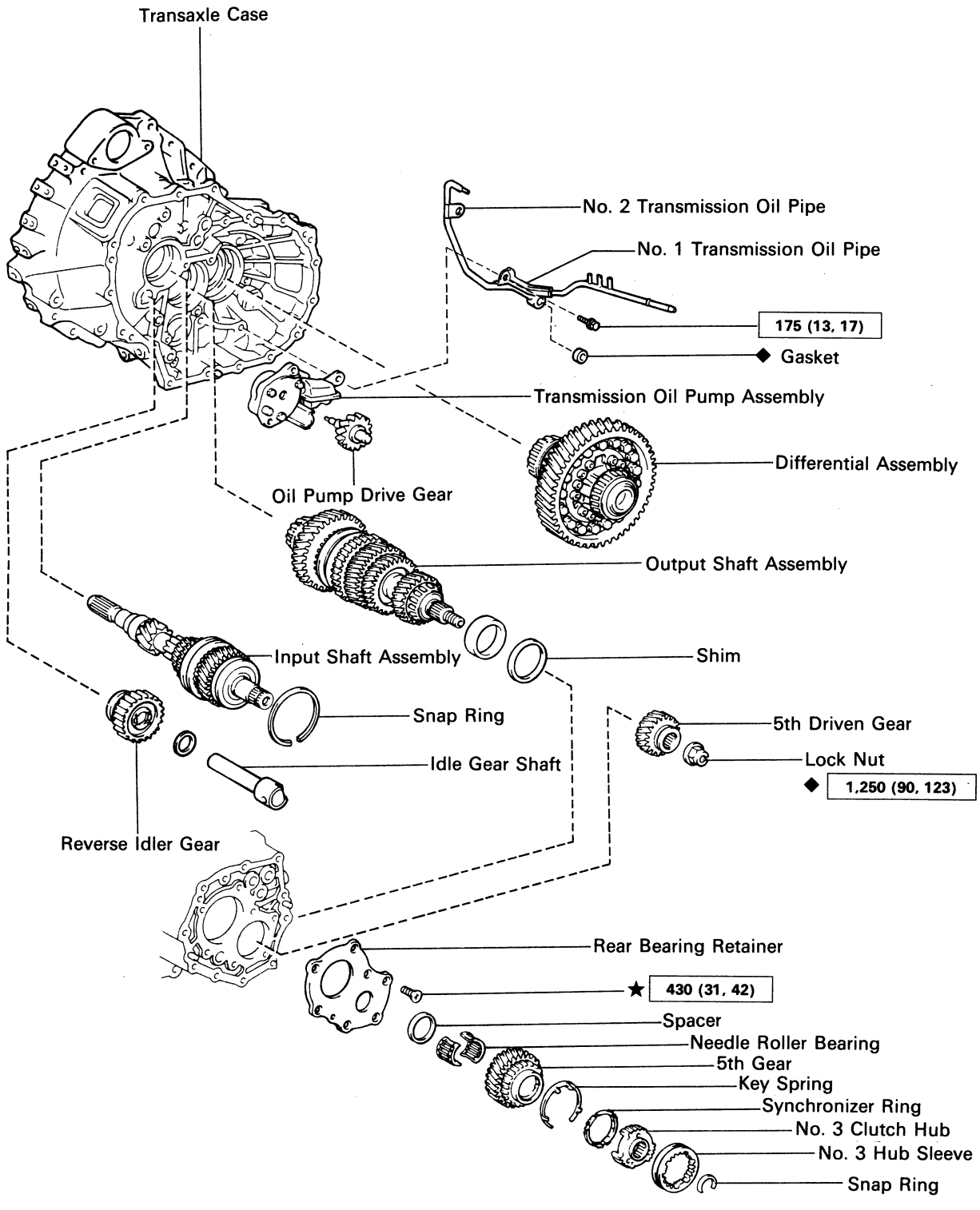

kg-cm (ft-lb, N·m) : Specified torque
◆ Non-reusable part
★ Precoated part

MT0691

COMPONENTS (Cont'd)

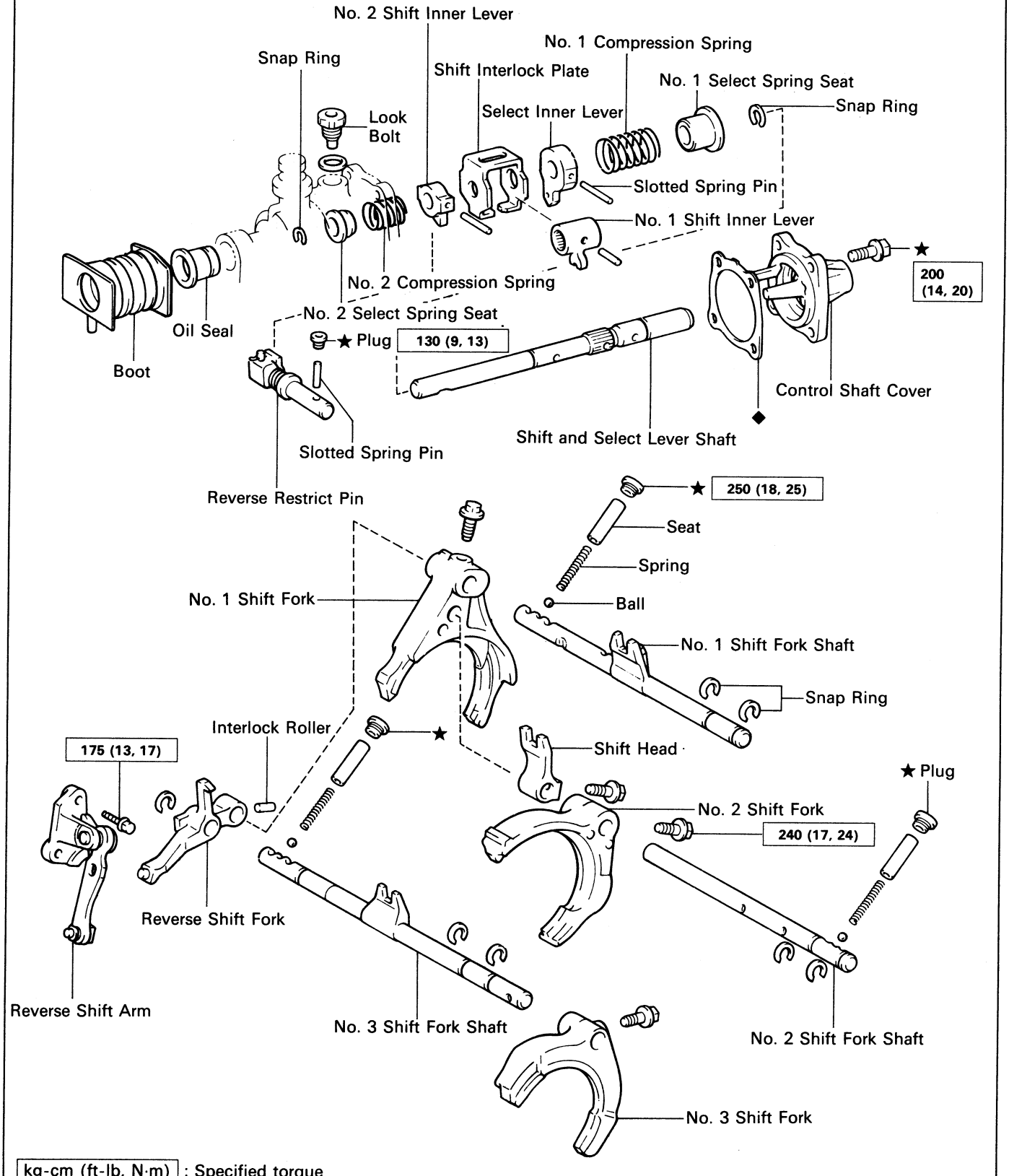

kg-cm (ft-lb, N·m) : Specified torque
◆ Non-reusable part
★ Precoated part

MT0652

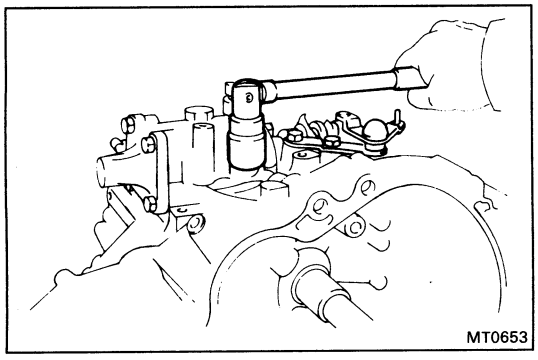
MT0653

REMOVAL OF COMPONENT PARTS

(See pages MT-57 to 59)

1. **REMOVE RELEASE FORK AND BEARING**

2. **REMOVE BACK-UP LIGHT SWITCH**
   Using SST, remove the back-up light switch.
   SST 09817-16011

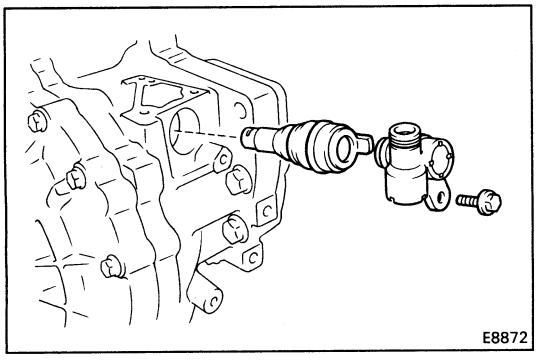
E8872

3. **REMOVE SPEEDOMETER DRIVEN GEAR**
   (a) Remove the set bolt and speedometer adaptor.
   (b) Remove the speedometer driven gear.

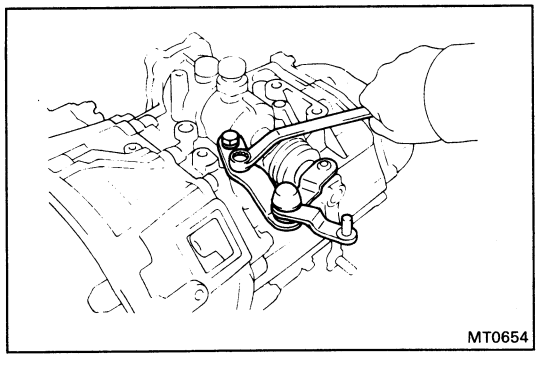
MT0654

4. **REMOVE SELECTING BELLCRANK ASSEMBLY**

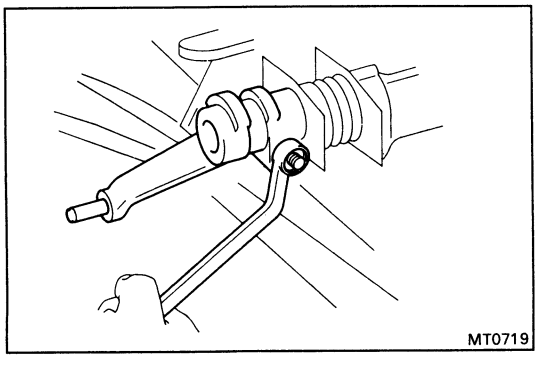
MT0719

5. **REMOVE SHIFT LEVER**
   (a) Remove the shift lever set nut.

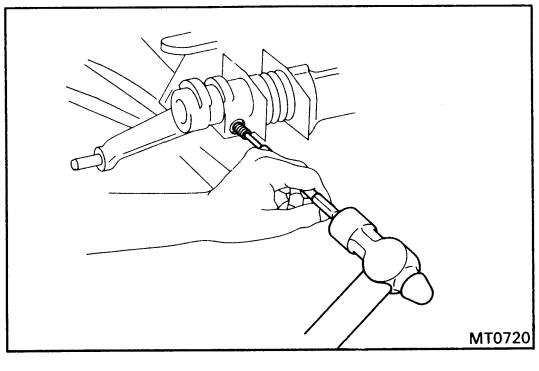
MT0720

   (b) Using a pin punch and hammer, tap out the lock pin.

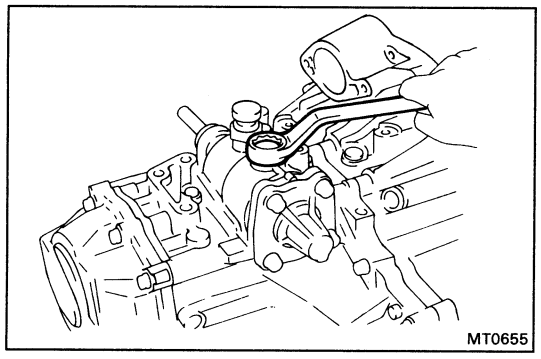

6. REMOVE LOCK BOLT

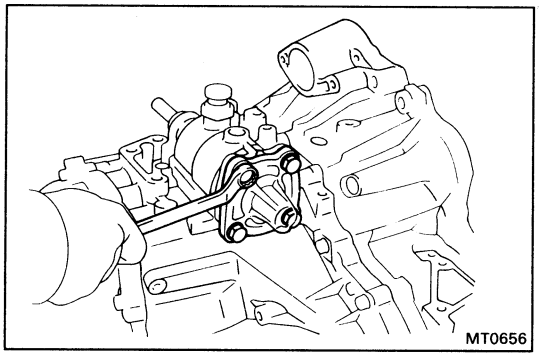

7. REMOVE CONTROL SHAFT COVER

Remove the bolts holding the control shaft cover.

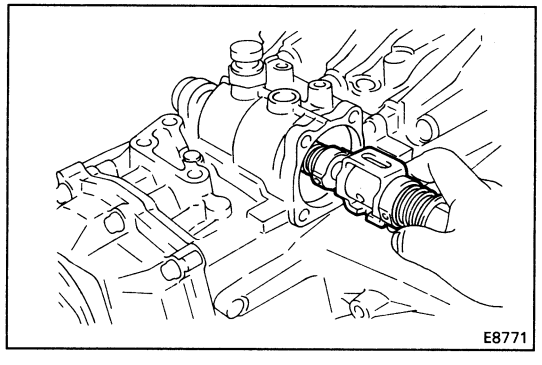

8. REMOVE SHIFT AND SELECT LEVER SHAFT ASSEMBLY

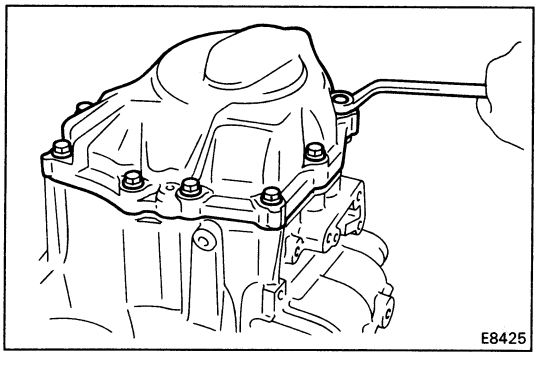

9. REMOVE TRANSMISSION CASE COVER

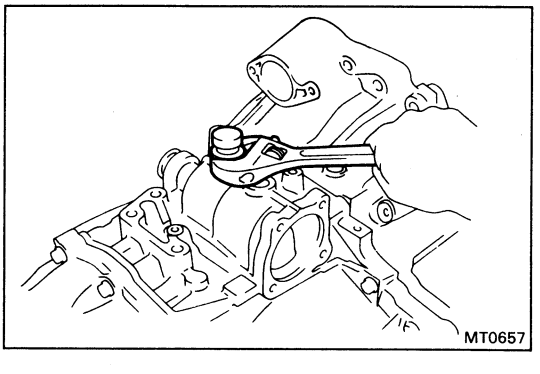

10. REMOVE BREATHER PLUG WITH GASKET

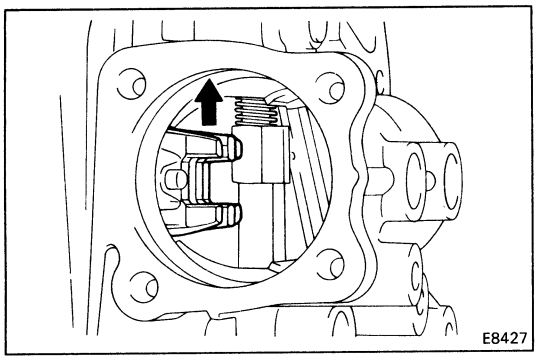

11. REMOVE LOCK NUT

(a) Unstake the lock nut.

(b) Engage the gear double meshing.

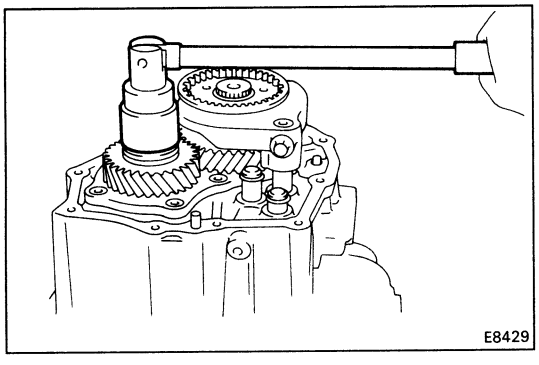

(c) Remove the lock nut.

(d) Disengage the gear double meshing.

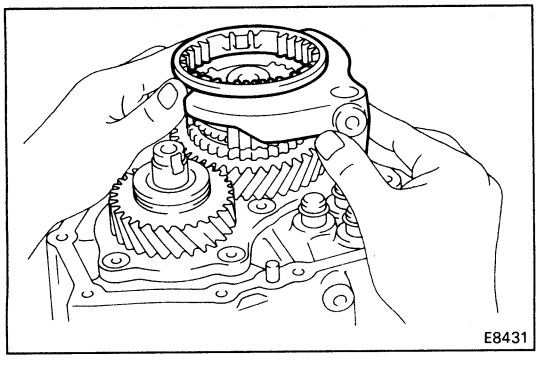

12. REMOVE NO. 3 HUB SLEEVE AND NO. 3 SHIFT FORK

(a) Remove the No. 3 shift fork set bolt.

(b) Remove the No. 3 hub sleeve and No. 3 shift fork.

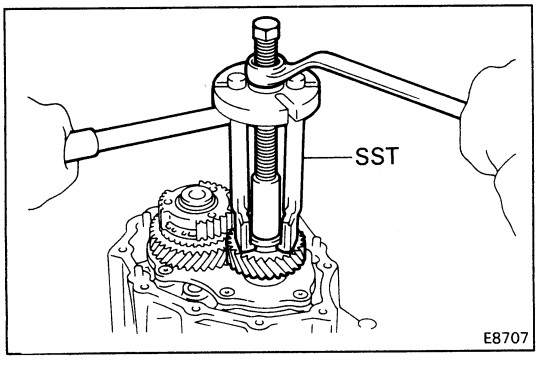

13. REMOVE FIFTH DRIVEN GEAR

Using SST, remove the 5th driven gear.

SST 09310-17010 (09310-07010, 09310-07020, 09310-07040, 09310-07050)

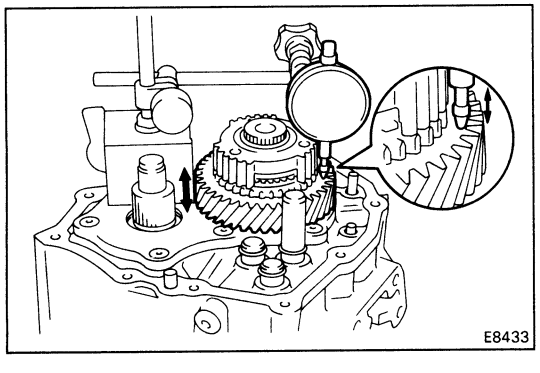

14. MEASURE FIFTH GEAR THRUST CLEARANCE AND OIL CLEARANCE

(a) Using a dial indicator, measure the thrust clearance.

Standard clearance: 0.10 – 0.57 mm (0.0039 – 0.0224 in.)

Maximum clearance: 0.65 mm (0.0256 in.)

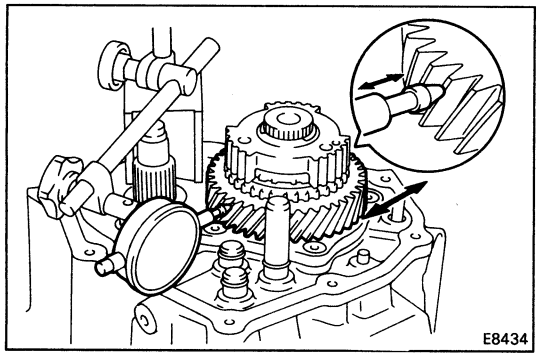

(b) Using a dial indicator, measure the oil clearance.

Standard clearance: **0.009 – 0.050 mm (0.0004 – 0.0020 in.)**
Maximum clearance: **0.070 mm (0.0028 in.)**

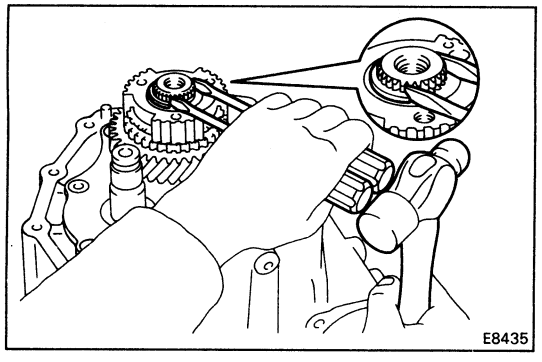

15. REMOVE NO. 3 CLUTCH HUB AND FIFTH GEAR

(a) Using two screwdrivers and a hammer, tap out the snap ring.

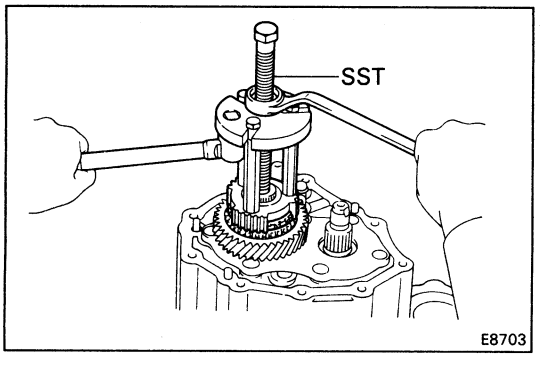

(b) Using SST, remove the No. 3 clutch hub with synchronizer ring and 5th gear.

SST 09310-17010 (09310-07010, 09310-07020, 09310-07040, 09310-07050)

16. REMOVE NEEDLE ROLLER BEARING AND SPACER

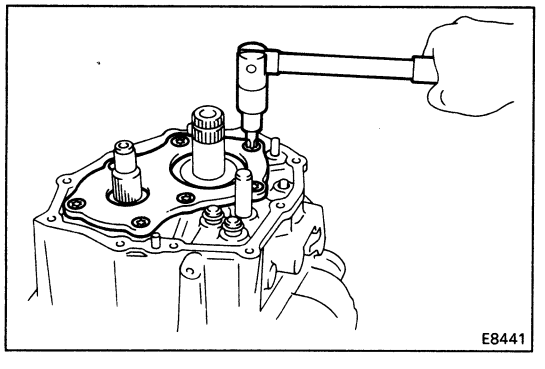

17. REMOVE REAR BEARING RETAINER

(a) Using a torx socket wrench, remove the seven torx screws and bearing retainer.

Torx wrench T45 09042-00050

(b) Remove the adjust shim.

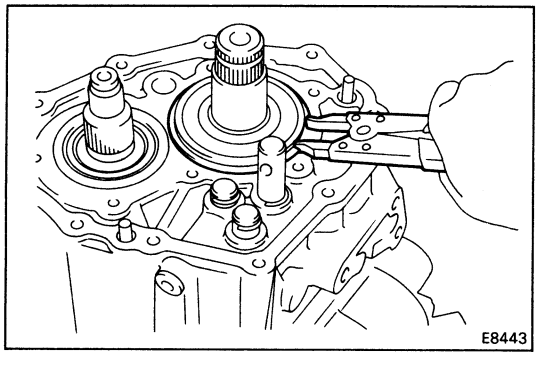

18. REMOVE SNAP RING

(a) Using snap ring pliers, remove the snap ring.

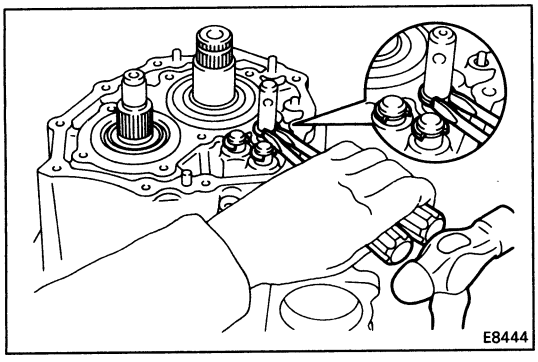

(b) Using two screwdrivers and a hammer, remove the three snap rings.

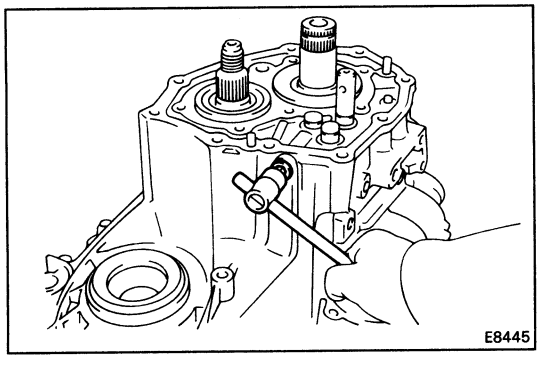

19. REMOVE PLUG, SEAT, SPRING AND LOCKING BALL

(a) Using SST, remove the plug.

SST 09313-30021

(b) Using a magnetic finger, remove the seat, spring and locking ball.

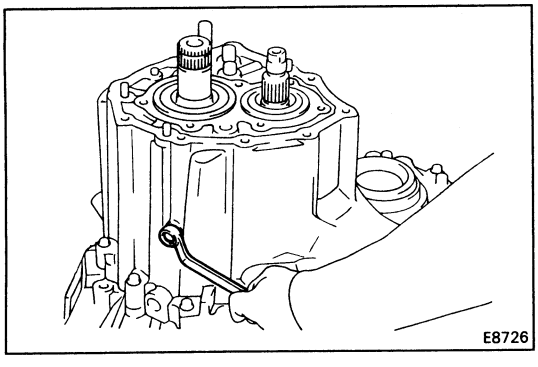

20. REMOVE REVERSE IDLER GEAR SHAFT RETAINING BOLT

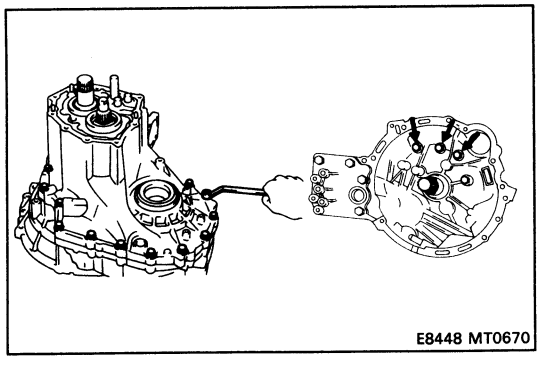

21. REMOVE TRANSMISSION CASE

Remove the seventeen bolts and tap off the case with a plastic hammer.

Transmission case side:	fourteen bolts
Transaxle case side:	three bolts

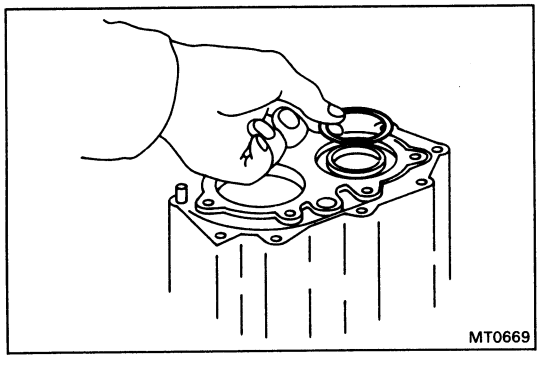

22. REMOVE OUTPUT SHAFT REAR TAPERED ROLLER BEARING OUTER RACE

(a) Remove the shim.

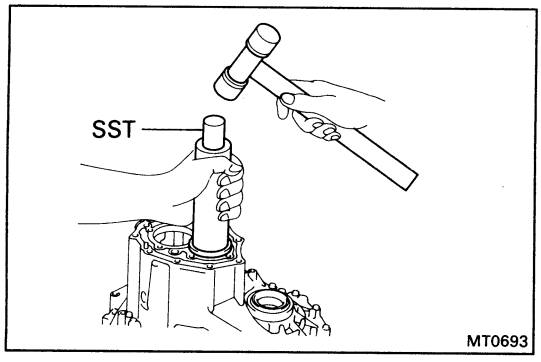

(b) Using SST and a hammer, remove the output shaft rear tapered roller bearing outer race.

SST 09316-60010 (09316-00010)

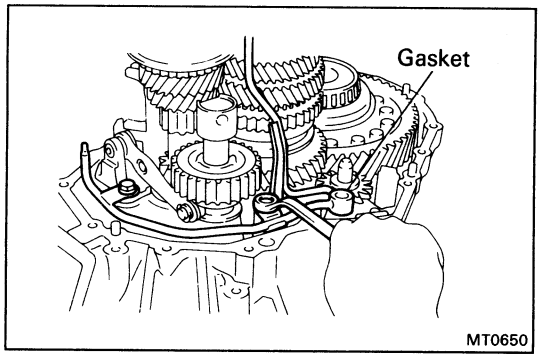

23. REMOVE NO. 2 OIL PIPE

(a) Remove the gasket.

(b) Remove the two bolts and oil pipe.

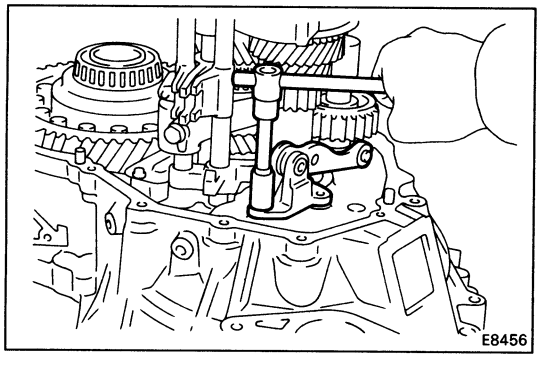

24. REMOVE REVERSE SHIFT ARM BRACKET

Remove the bolt and pull off the bracket.

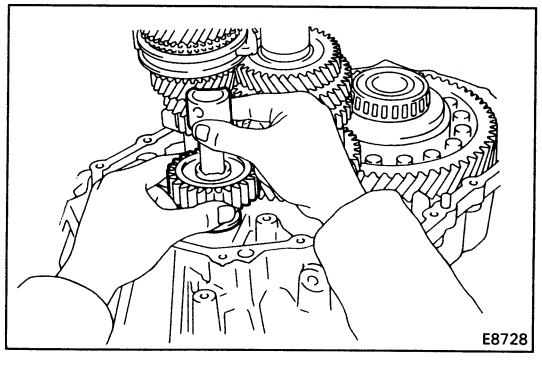

25. REMOVE REVERSE IDLER GEAR AND SHIFT

Pull out the shift, remove the reverse idler gear.

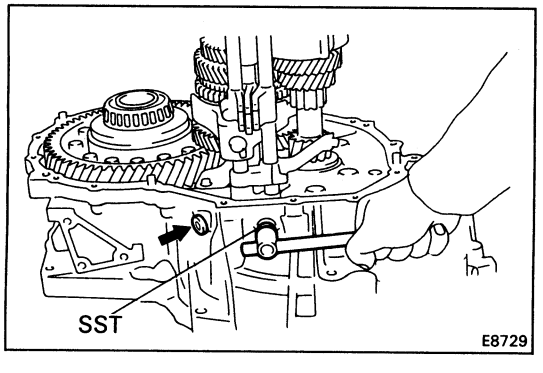

26. REMOVE STRAIGHT SCREW, LOCKING BALLS AND SPRINGS

(a) Using SST, remove the two plugs.

SST 09313-30021

(b) Using a magnetic finger, remove the two spring seats, springs and balls.

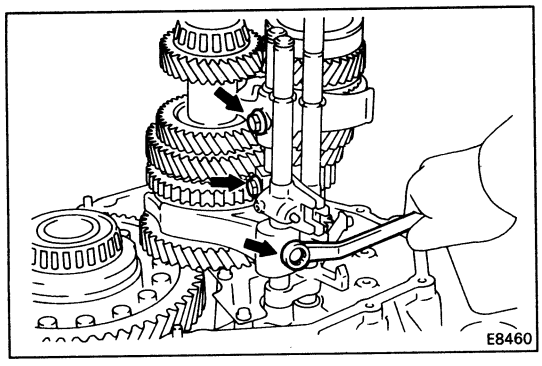

27. REMOVE THREE SET BOLTS

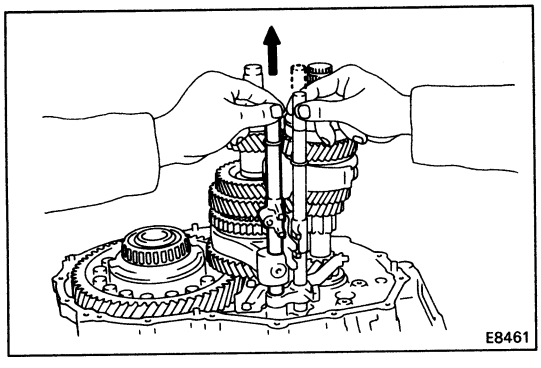

28. REMOVE NO. 1 SHIFT FORK SHAFT

Pull up No. 3 shift fork shaft, remove the No. 1 shift fork shaft.

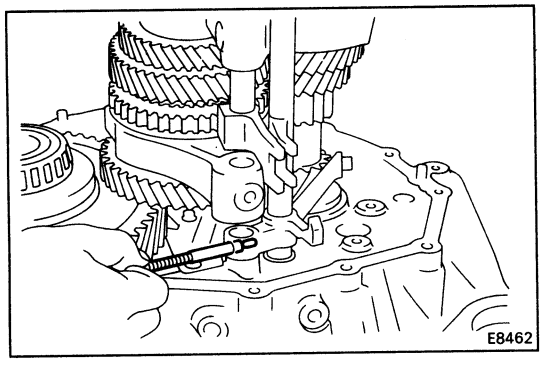

29. REMOVE INTERLOCK ROLLER

Using a magnetic finger, remove the interlock roller from the reverse shift fork.

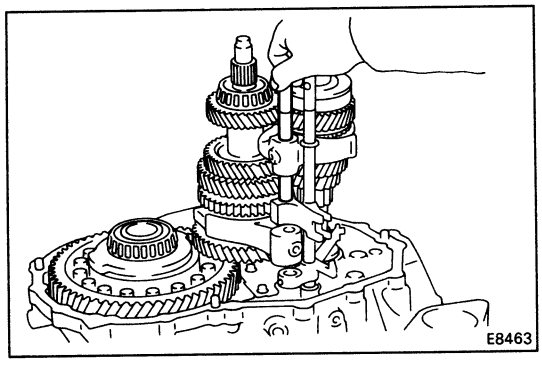

30. REMOVE NO. 2 SHIFT FORK SHAFT, SHIFT HEAD AND NO. 1 SHIFT FORK

(a) Pull out the No. 2 shift fork shaft.

(b) Remove the shift head and No. 1 shift fork.

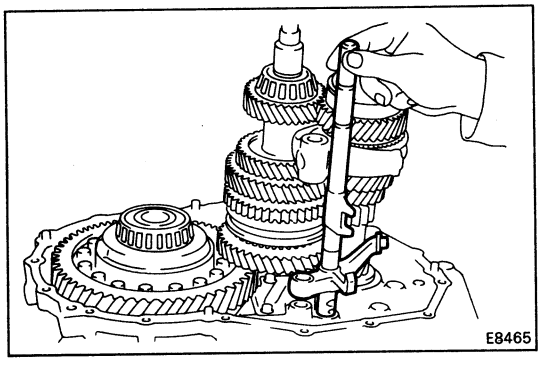

31. REMOVE NO. 3 SHIFT FORK SHAFT WITH REVERSE SHIFT FORK AND NO. 2 SHIFT FORK

(a) Pull out the No. 3 shift fork shaft with reverse shift fork.

(b) Remove the No. 2 shift fork.

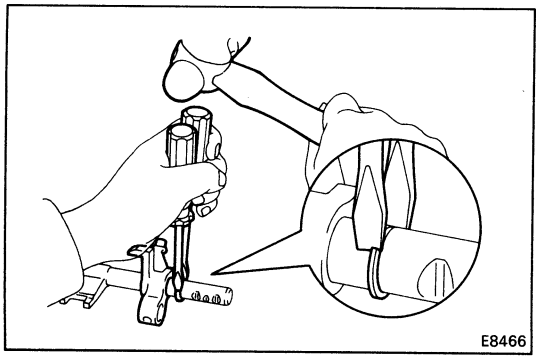

32. REMOVE SNAP RINGS

(a) Using two screwdrivers and a hammer, remove the snap ring and reverse shift fork from the No. 3 shift fork shaft.

(b) Using two screwdrivers and a hammer, remove the snap ring from the No. 1, No. 2 and No. 3 shift fork shafts.

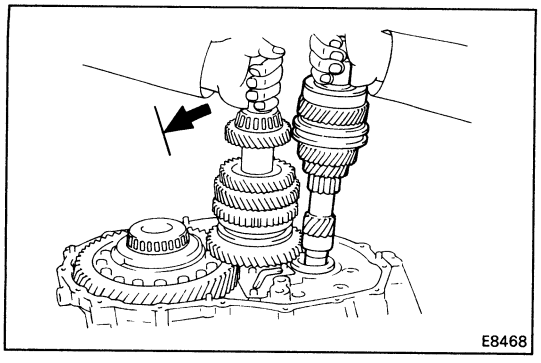

33. REMOVE INPUT AND OUTPUT SHAFT ASSEMBLY

(a) Leaning the output shaft to the differential side, remove the input shaft assembly.

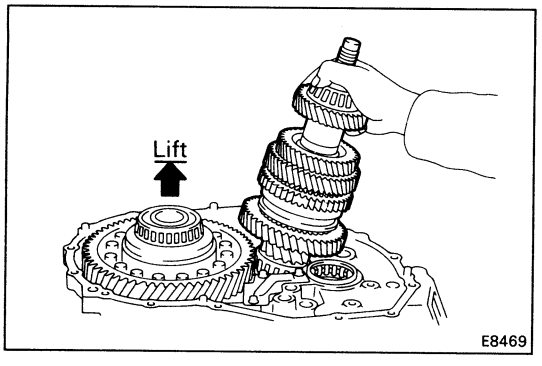

(b) Lift up the differential case assembly, remove the output shaft.

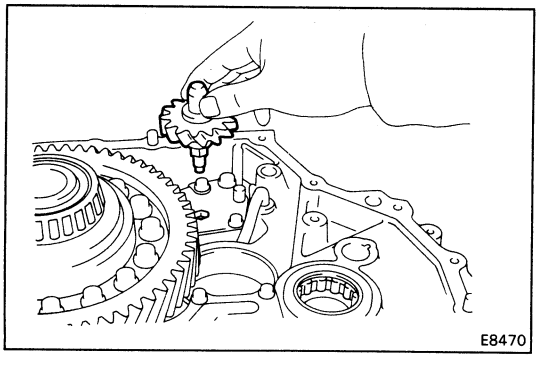

34. REMOVE DIFFERENTIAL ASSEMBLY

(a) Remove the oil pump drive gear.

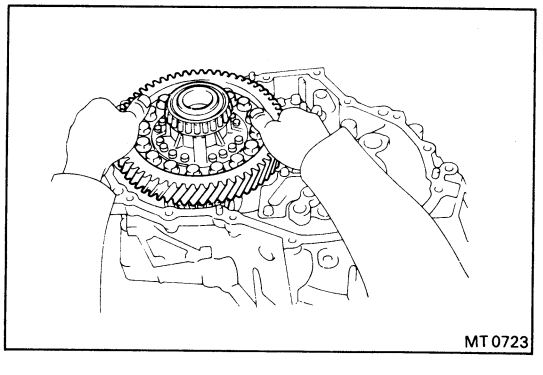

(b) Remove the differential case assembly.

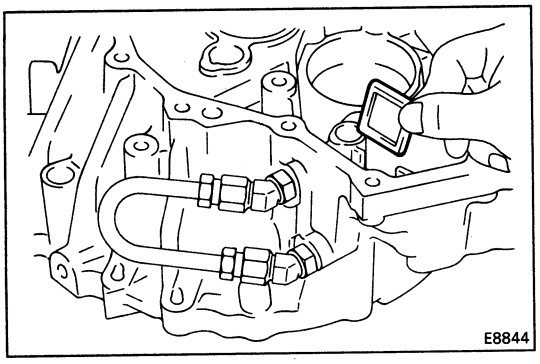

35. REMOVE MAGNET FROM TRANSAXLE CASE

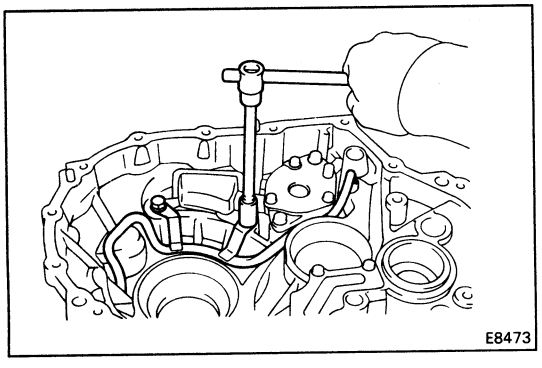

36. REMOVE OIL PUMP ASSEMBLY

(a) Remove the two bolts and oil pipe.

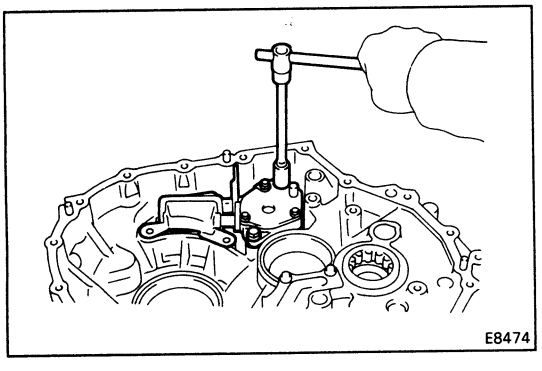

(b) Remove the two bolts and oil pump.

INSPECTION OF COMPONENT PARTS

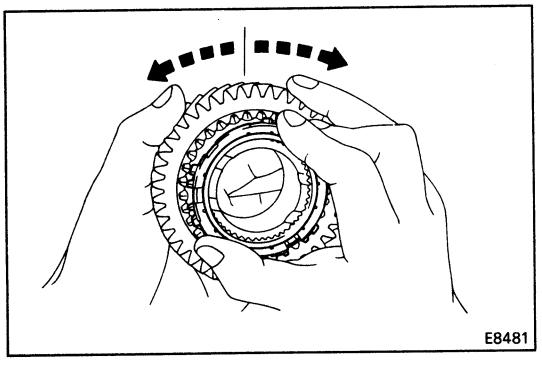

1. INSPECT SYNCHRONIZER RING FOR FIFTH GEAR

(a) Check for wear or damage.

(b) Turn the ring and push it in to check the braking action.

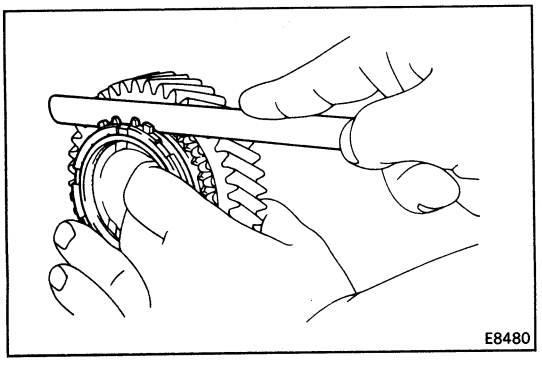

(c) Measure the clearance between the synchronizer ring back and the gear spline end.

Minimum clearance: 0.6 mm (0.024 in.)

If the clearance is less than the limit, replace the synchronizer ring.

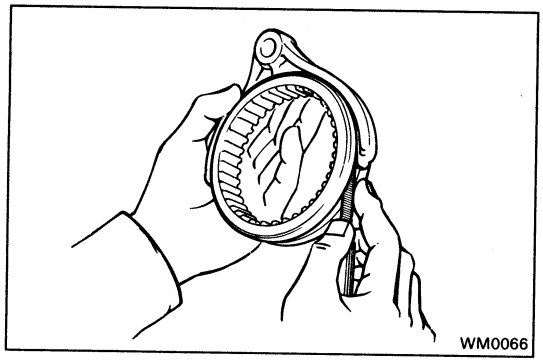

2. MEASURE CLEARANCE OF SHIFT FORKS AND HUB SLEEVE

Using a feeler gauge, measure the clearance between the hub sleeve and shift fork.

Maximum clearance: 1.0 mm (0.039 in.)

If the clearance exceeds the limit, replace the shift fork or hub sleeve.

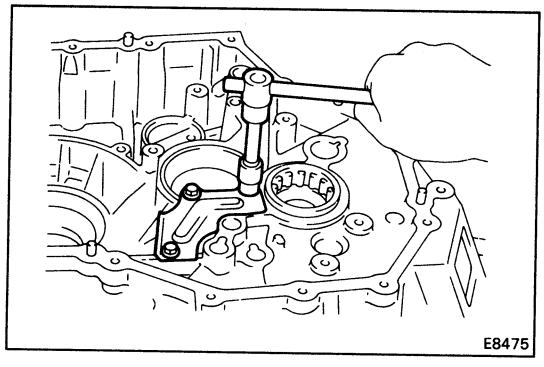

3. REMOVE TRANSAXLE CASE RECEIVER

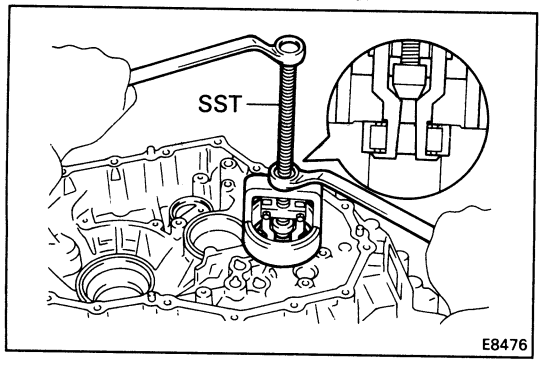

4. IF NECESSARY, REPLACE INPUT SHAFT BEARING AND OIL SEAL

(a) Using SST, pull out the bearing.

SST 09612-65014 (09612-01060)

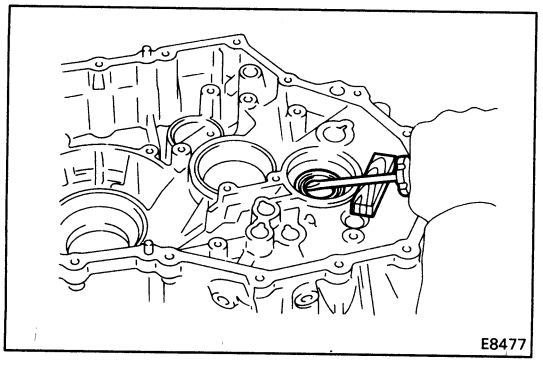

(b) Using a screwdriver, remove the oil seal.

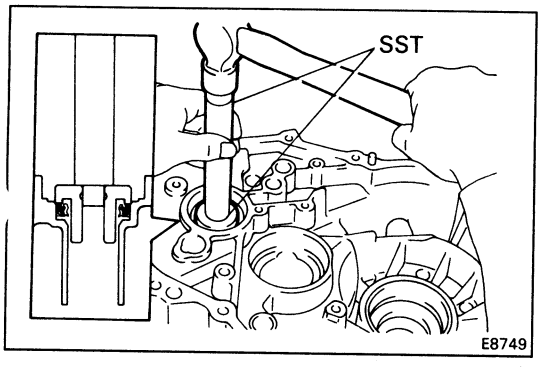

(c) Using SST, drive in a new oil seal.

SST 09608-12010 (09608-00020, 09608-00080)

(d) Coat the lip of seal with MP grease.

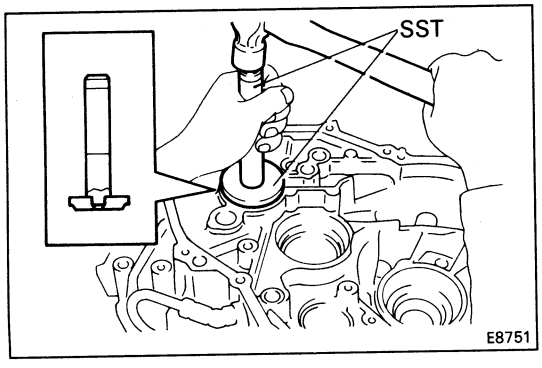

(e) Using SST, drive in a new bearing.

SST 09608-12010 (09608-00020, 09608-00060)

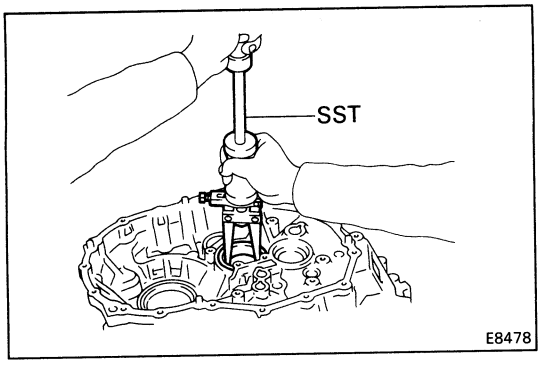

5. IF NECESSARY, REPLACE OUTPUT SHAFT FRONT OUTER RACE AND OUTPUT SHAFT COVER

(a) Using SST, pull out the outer race.

SST 09308-00010

(b) Remove the output shaft cover.

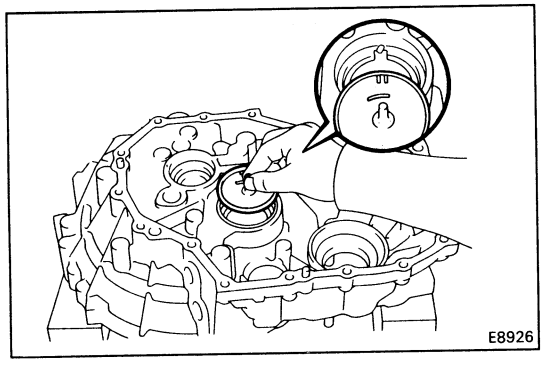

(c) Install the output shaft front cover.

HINT: Install the shaft cover projection into the case side groove.

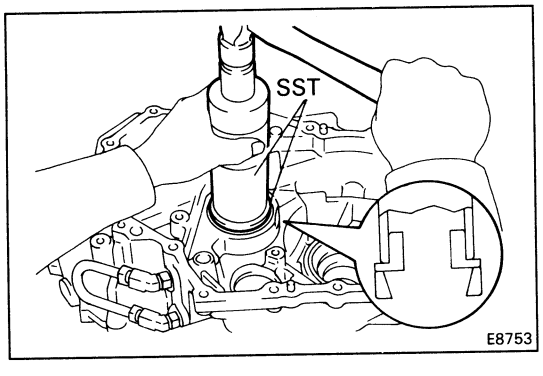

(d) Using SST, press in a new outer race.

SST 09316-60010 (09316-00010, 09316-00020)

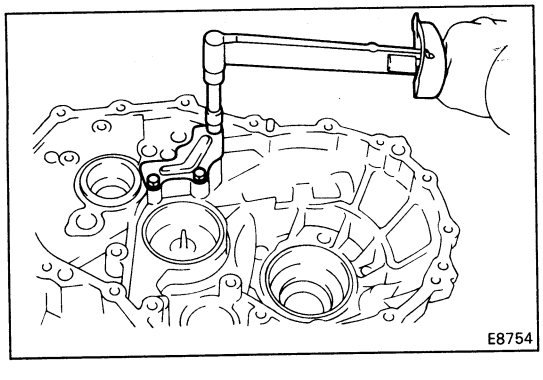

6. INSTALL AND TORQUE TRANSAXLE CASE RECEIVER

Torque: 75 kg-cm (65 in.-lb. 7.4 N·m)

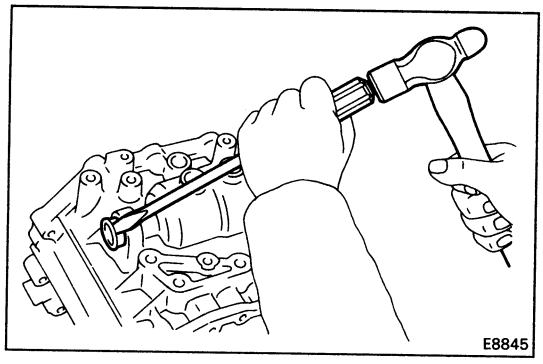

7. IF NECESSARY, REPLACE SHIFT CONTROL SHAFT OIL SEAL

(a) Using a screwdriver and hammer, remove the oil seal.

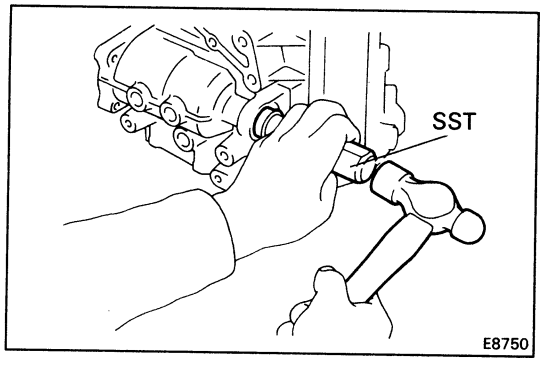

(b) Using SST, drive in the new oil seal until it touches the bottom.

SST 09517-36010

(c) Coat the lip of oil seal with MP grease.

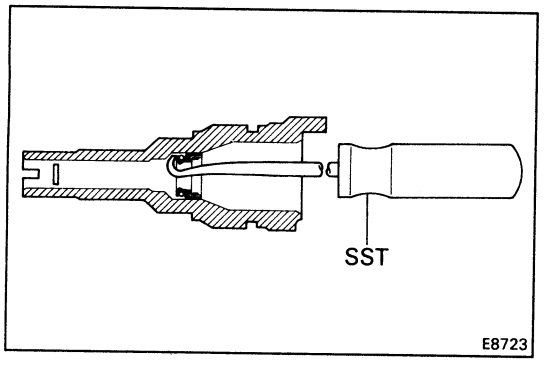

8. IF NECESSARY, REPLACE SPEEDOMETER DRIVEN GEAR OIL SEAL

(a) Using SST, pull out the oil seal.

SST 09921-00010

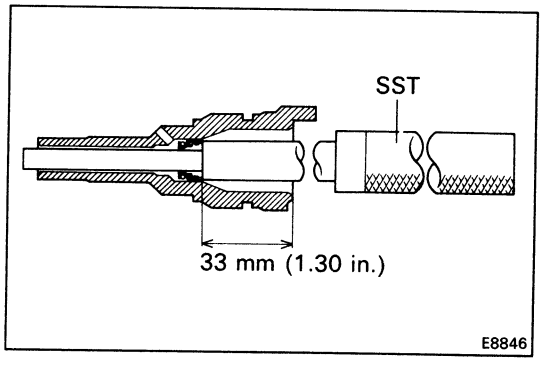

(b) Using SST, drive in a new oil seal.

SST 09201-60011

Drive in depth: 33 mm (1.30 in.)

(c) Coat the lip of oil seal with MP grease.

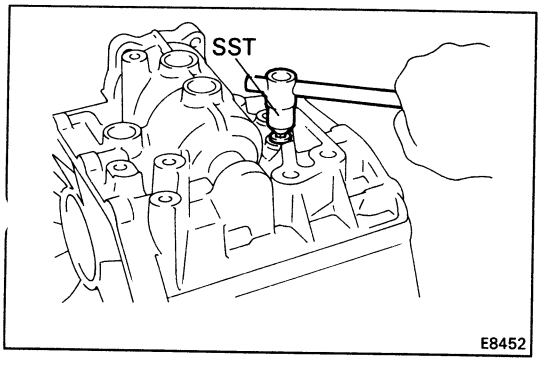

9. IF NECESSARY, REPLACE REVERSE RESTRICT PIN

(a) Using SST, remove the screw plug.

SST 09313-30021

(b) Using a pin punch and hammer, drive out the slotted spring pin.

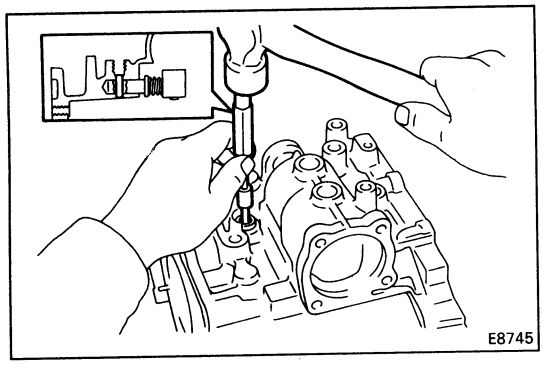

(c) Replace the reverse restrict pin.

(d) Using a pin punch and hammer, drive in the slotted spring pin.

(e) Apply liquid sealant to the plug threads.

Sealant: Part No. 08833-00080, THREE BOND 1344, LOCTITE 242 or equivalent

(f) Using SST, install the screw plug.

SST 09313-30021

COMPONENT PARTS

Input Shaft Assembly

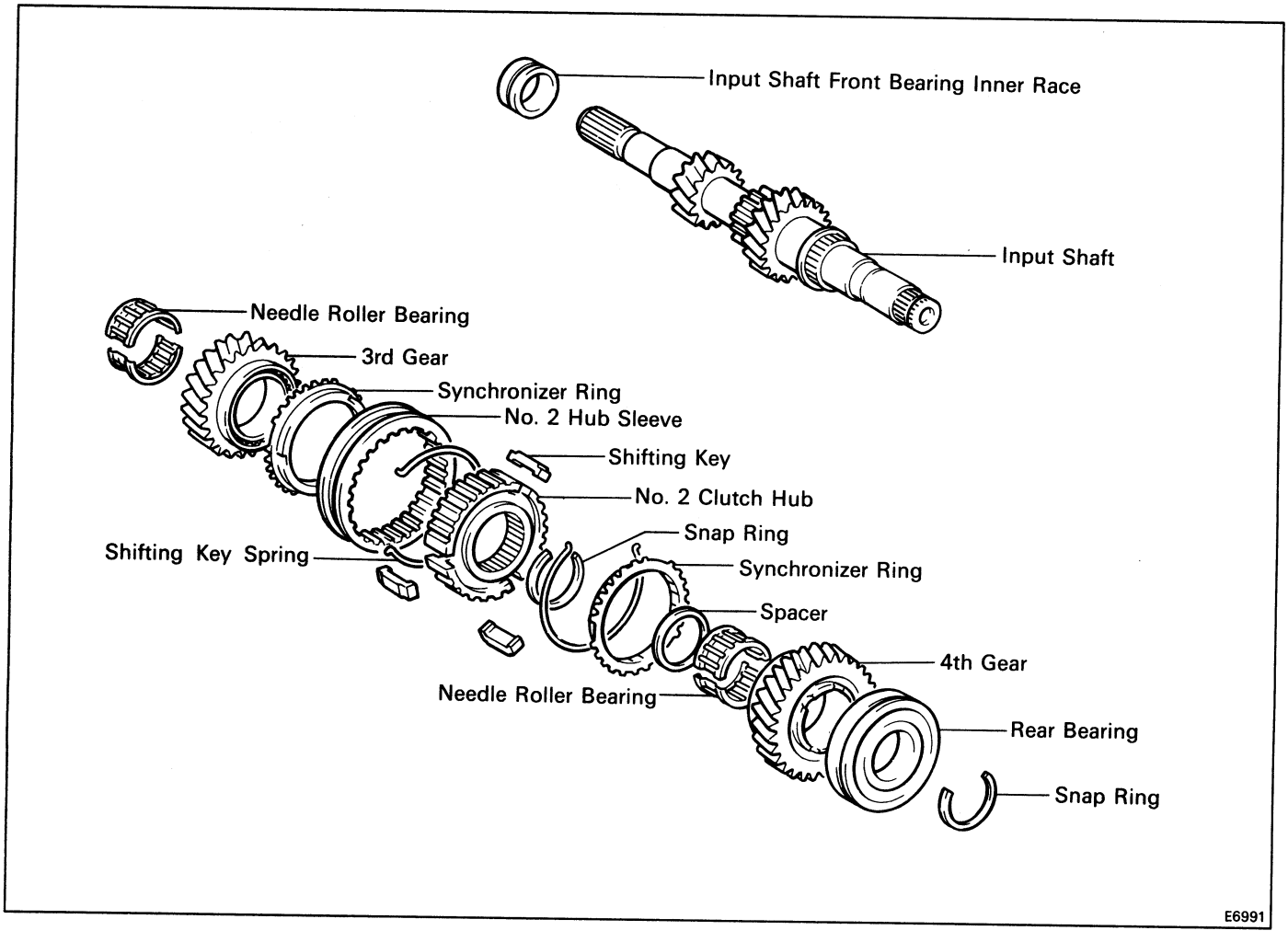

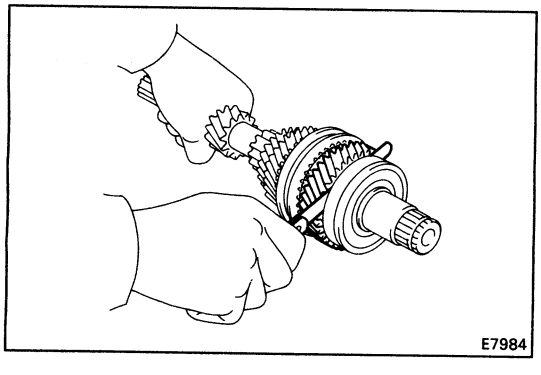

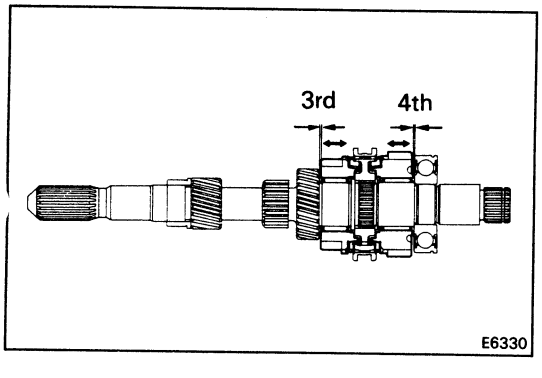

DISASSEMBLY OF INPUT SHAFT ASSEMBLY

1. MEASURE THIRD AND FOURTH GEAR THRUST CLEARANCE

Using a feeler gauge, measure the thrust clearance.

Standard clearance:

3rd gear	**0.10 – 0.35 mm (0.0039 – 0.0138 in.)**
4th gear	**0.10 – 0.55 mm (0.0039 – 0.0217 in.)**

Maximum clearance:

3rd gear	**0.40 mm (0.0157 in.)**
4th gear	**0.60 mm (0.0236 in.)**

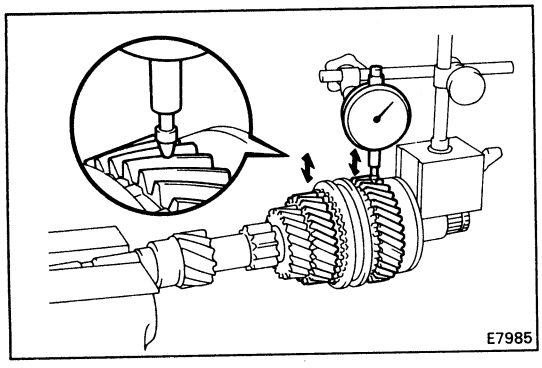

2. CHECK OIL CLEARANCE OF THIRD AND FOURTH GEAR

Using dial indicator, measure the oil clearance between the gear and shaft.

Standard clearance:

3rd gear	**0.009 – 0.053 mm (0.0004 – 0.0020 in.)**
4th gear	**0.009 – 0.051 mm (0.0004 – 0.0020 in.)**

Maximum clearance:

3rd and 4th gear 0.070 mm (0.0028 in.)

If clearance exceeds the limit, replace the gear, needle roller bearing or shaft.

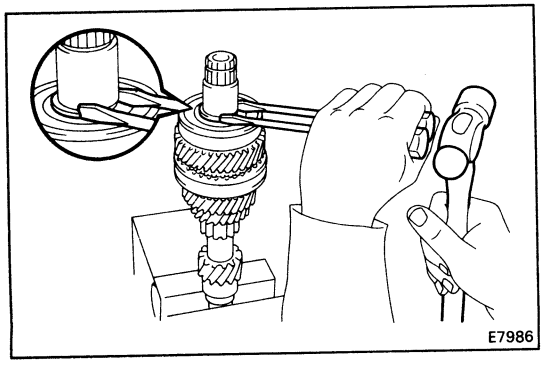

3. REMOVE SNAP RING

Using two screwdrivers and a hammer, tap out the snap ring

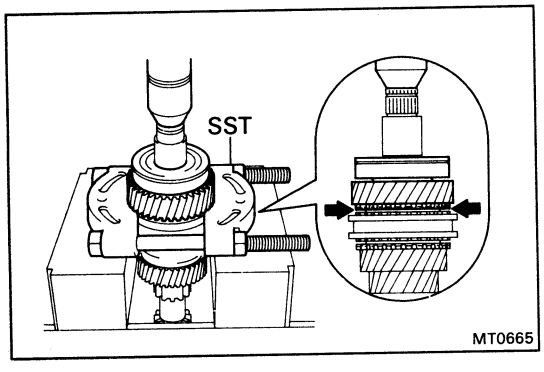

4. REMOVE RADIAL BALL BEARING AND FOURTH GEAR

Using SST and a press, remove the radial ball bearing.

SST 09950-00020

5. REMOVE NEEDLE ROLLER BEARINGS, SPACER AND SYNCHRONIZER RING

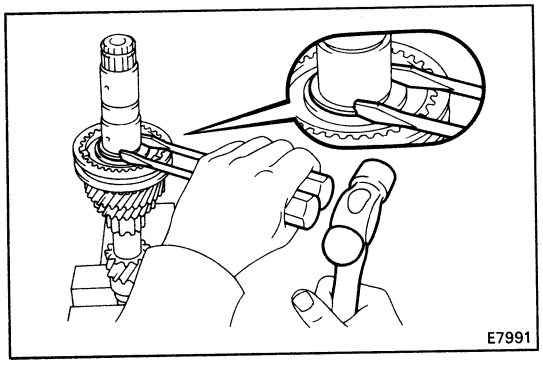

6. REMOVE SNAP RING

Using two screwdrivers and a hammer, tap out the snap ring.

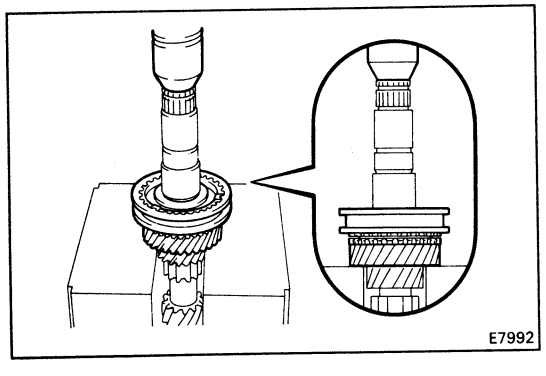

7. REMOVE NO. 2 CLUTCH HUB ASSEMBLY, SYNCHRONIZER RING AND THIRD GEAR

Using a press, remove No. 2 hub sleeve, 3rd gear, synchronizer ring and needle roller bearings.

8. REMOVE NEEDLE ROLLER BEARING

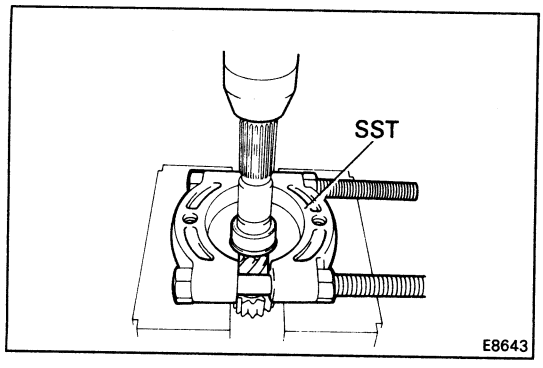

9. REMOVE INPUT SHAFT FRONT BEARING INNER RACE

Using SST and a press, remove the inner race.

SST 09950-00020

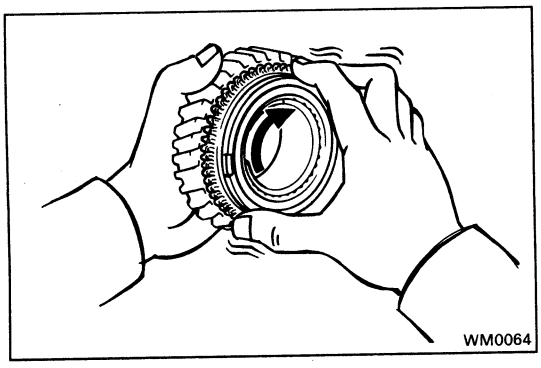

INSPECTION OF INPUT SHAFT COMPONENT PARTS

1. INSPECT SYNCHRONIZER RINGS

(a) Check for wear or damage.

(b) Turn the ring and push it in to check the braking action.

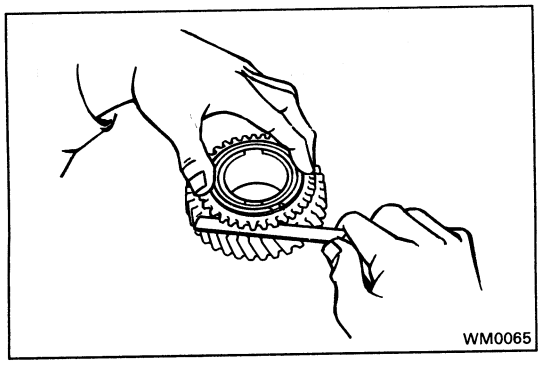

(c) Measure the clearance between the synchronizer ring back and the gear spline end.

Minimum clearance: 0.6 mm (0.024 in.)

If the clearance is less than the limit, replace the synchronizer ring.

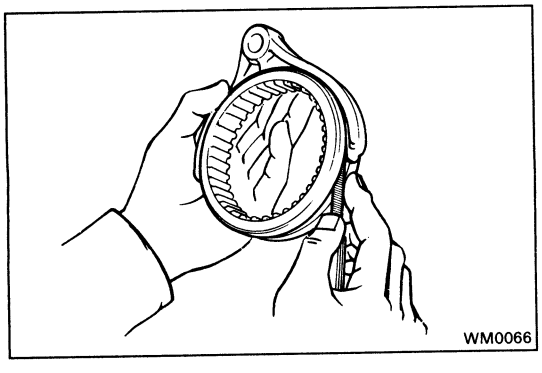

2. MEASURE CLEARANCE OF NO. 2 SHIFT FORK AND HUB SLEEVE

Using a feeler gauge, measure the clearance between the hub sleeve and shift fork.

Maximum clearance: 1.0 mm (0.039 in.)

If the clearance exceeds the limit, replace the shift fork or hub sleeve.

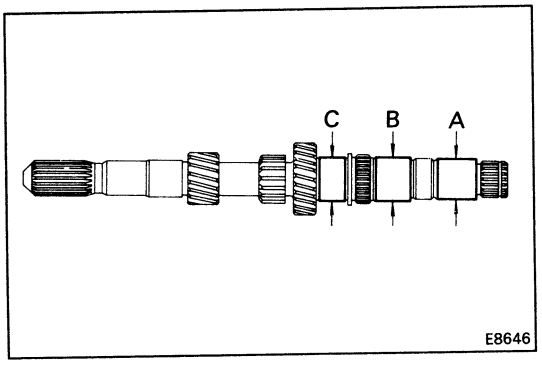

3. INSPECT INPUT SHAFT

(a) Check the input shaft for wear or damage.

(b) Using a micrometer measure the outer diameter of the input shaft journal surface.

Minimum outer diameter:

Part A	**32.930 mm (1.2965 in.)**
B and C	**35.950 mm (1.4154 in.)**

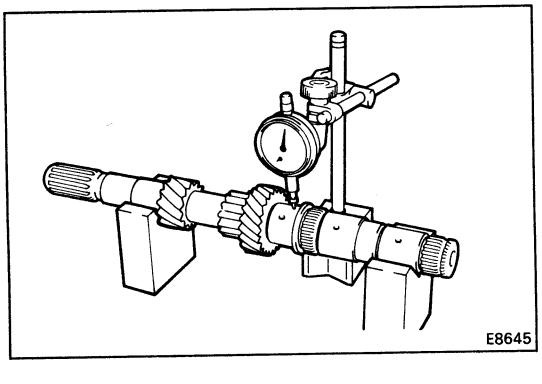

(c) Using a dial indicator, check the shaft runout.

Maximum runout: 0.05 mm (0.0020 in.)

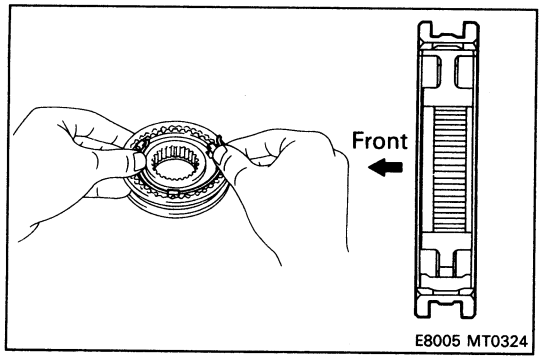

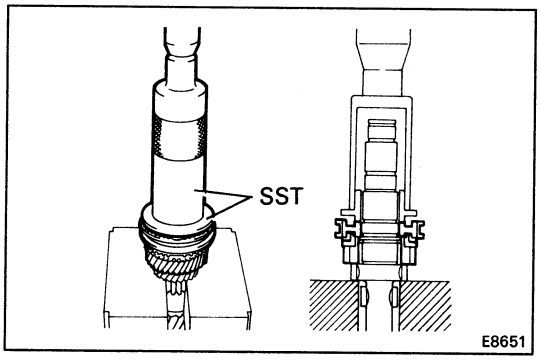

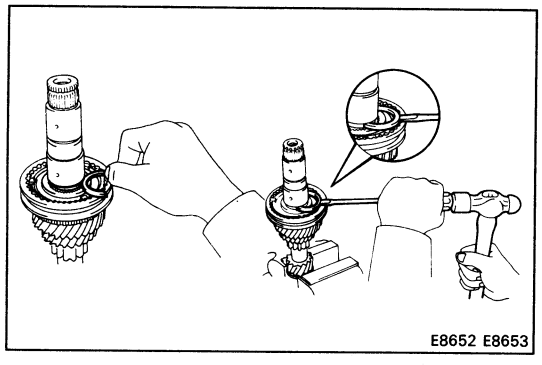

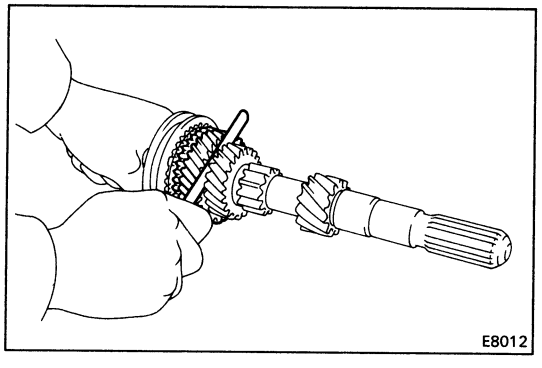

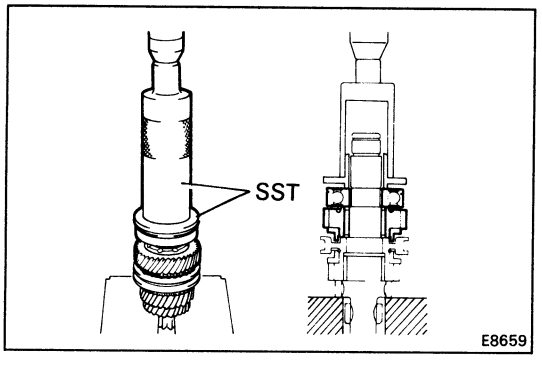

ASSEMBLY OF INPUT SHAFT ASSEMBLY

(See page MT-73)

HINT: Coat all of the sliding and rotating surface with gear oil before assembly.

1. INSERT NO. 2 CLUTCH HUB INTO HUB SLEEVE

(a) Install the clutch hub and shifting keys to the hub sleeve.

(b) Install the shifting key springs under the shifting keys.

CAUTION: Install the shifting key springs positioned so that their end gaps are not in line.

2. INSTALL NEEDLE ROLLER BEARING, THIRD GEAR, SYNCHRONIZER RING AND NO. 2 HUB SLEEVE ASSEMBLY TO INPUT SHIFT

(a) Apply MP grease to the needle roller bearings.

(b) Install the 3rd gear.

(c) Place the synchronizer ring on the gear and align the ring slots with the shifting keys.

(d) Using SST and a press, install the 3rd gear and No. 2 hub sleeve.

SST 09316-60010 (09316-00010, 09316-00050)

3. INSTALL SNAP RING

Select a snap ring that will allow minimum axial play and install it on the shaft.

Mark	Thickness mm (in.)	Mark	Thickness mm (in.)
H	2.30 (0.0906)	M	2.50 (0.0984)
J	2.35 (0.0925)	N	2.55 (0.1004)
K	2.40 (0.0945)	P	2.60 (0.1024)
L	2.45 (0.0965)		

4. MEASURE THIRD GEAR THRUST CLEARANCE

Using a feeler gauge, measure the 3rd gear thrust clearance.

Standard clearance: 0.10 – 0.35 mm (0.0039 – 0.0138 in.)

5. INSTALL SPACER, SYNCHRONIZER RING, NEEDLE ROLLER BEARINGS, FOURTH GEAR AND RADIAL BALL BEARING

(a) Install the spacer.

(b) Apply MP grease to the needle roller bearings.

(c) Place the synchronizer ring on the gear and align the ring slots with the shifting keys.

(d) Install the 4th gear.

(e) Using SST and a press, install the radial ball bearing.

SST 09316-60010 (09316-00010, 09316-00020)

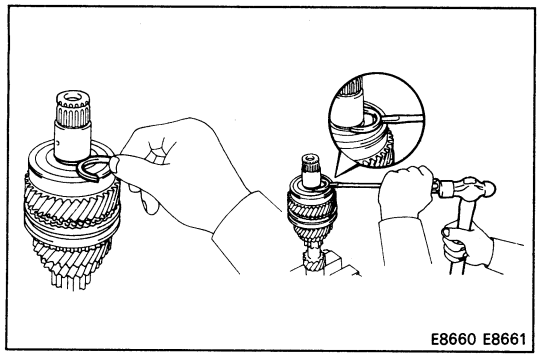
E8660 E8661

6. INSTALL SNAP RING

Select a snap ring that will allow minimum axial play and install it on the shaft.

Mark	Thickness mm (in.)	Mark	Thickness mm (in.)
1	2.35 (0.0925)	5	2.55 (0.1004)
2	2.40 (0.0945)	6	2.60 (0.1024)
3	2.45 (0.0965)	7	2.65 (0.1043)
4	2.50 (0.0984)	8	2.70 (0.1063)

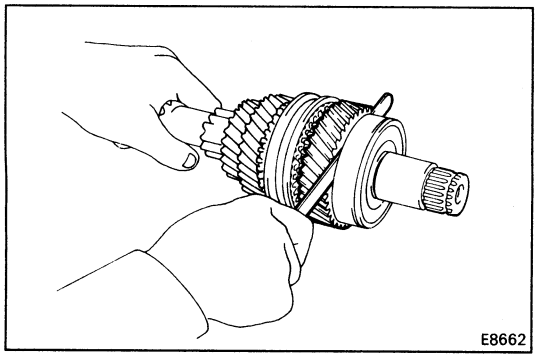
E8662

7. MEASURE FOURTH GEAR THRUST CLEARANCE

Using a feeler gauge, measure the 4th gear thrust clearance.

Standard clearance: 0.10 – 0.55 mm (0.0039 – 0.0217 in.)

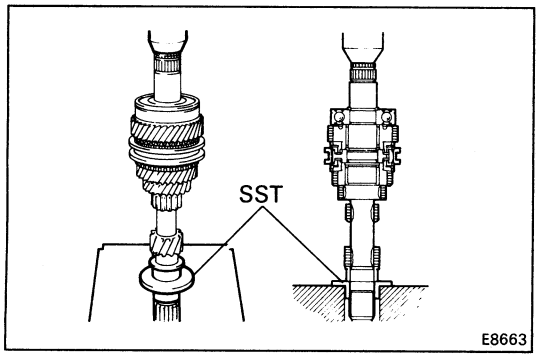

E8663

8. INSTALL INPUT SHAFT FRONT BEARING INNER RACE

Using SST and a press, install the input shaft front bearing inner race.

SST 09316-60010 (09316-00020)

Output Shaft Assembly

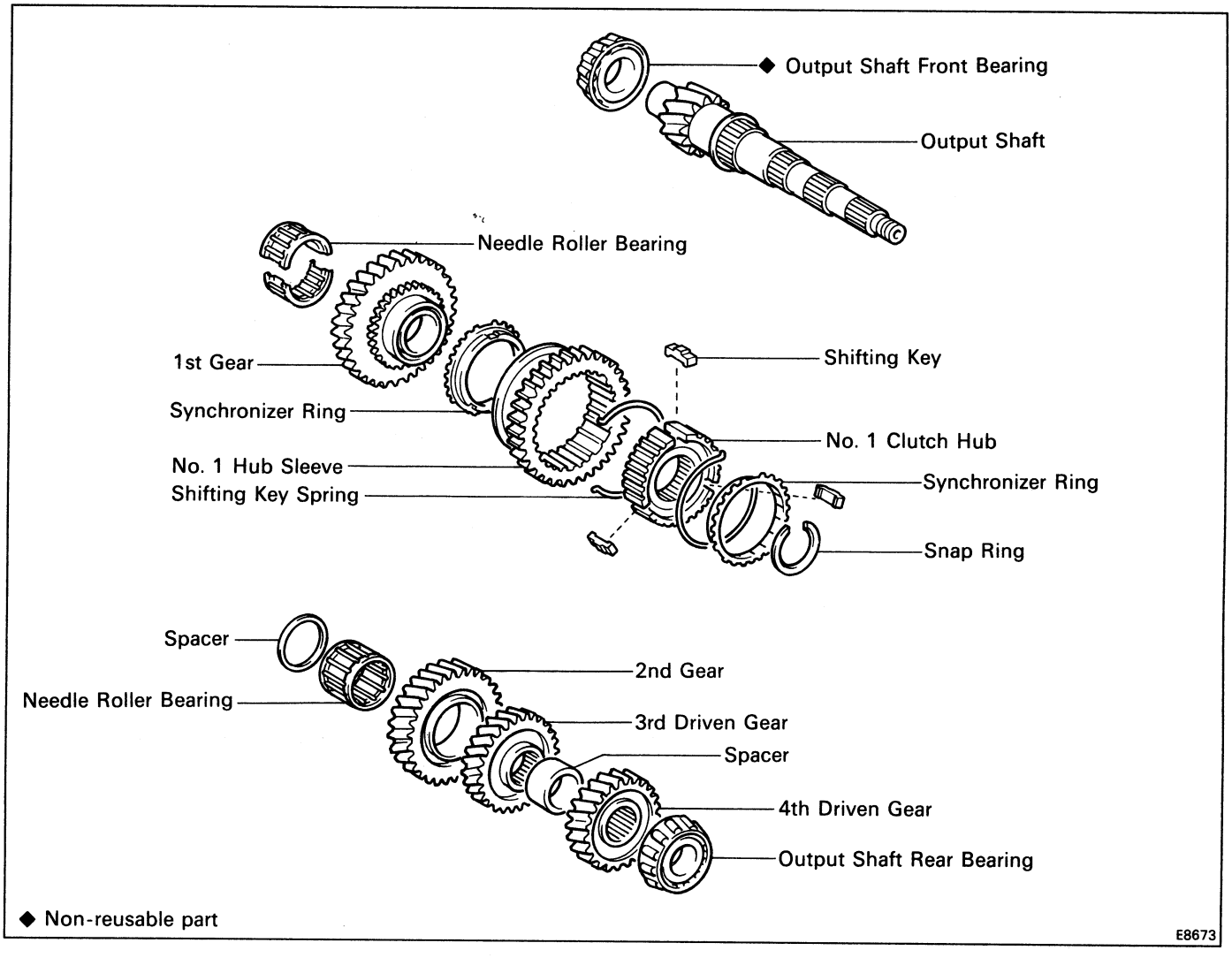

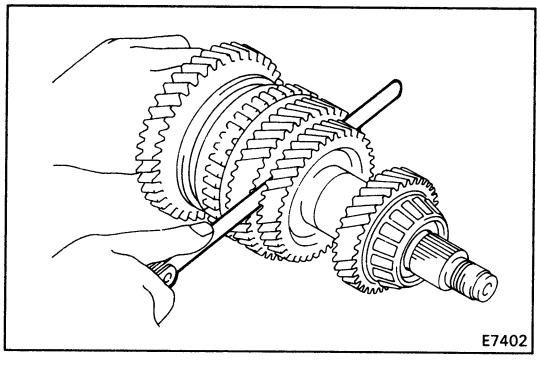

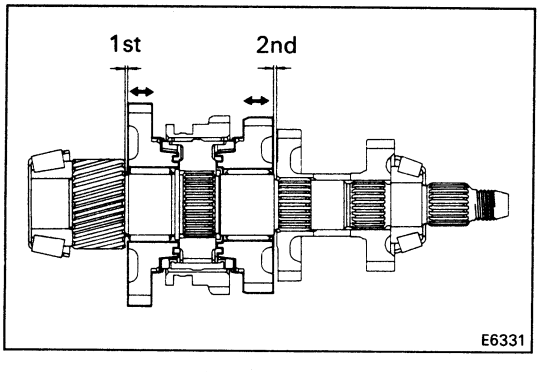

DISASSEMBLY OF OUTPUT SHAFT ASSEMBLY

1. MEASURE FIRST AND SECOND GEAR THRUST CLEARANCE

Using a feeler gauge, measure the thrust clearance.

Standard clearance:

1st gear	**0.10 – 0.35 mm (0.0039 – 0.0138 in.)**
2nd gear	**0.10 – 0.45 mm (0.0039 – 0.0177 in.)**

Maximum clearance:

1st gear	**0.40 mm (0.0157 in.)**
2nd gear	**0.50 mm (0.0197 in.)**

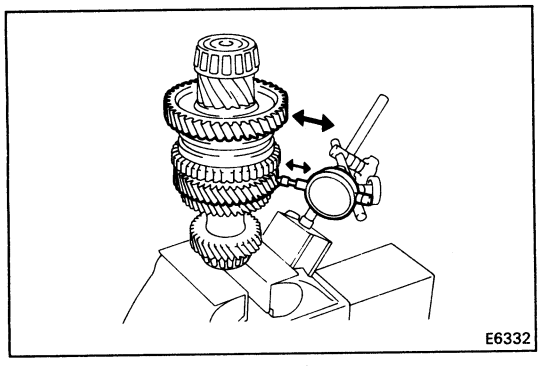
E6332

2. CHECK OIL CLEARANCE OF FIRST AND SECOND GEAR

Using dial indicator, measure the oil clearance between the gear and shaft.

Standard clearance:

1st gear	**0.009 – 0.051 mm (0.0004 – 0.0020 in.)**
2nd gear	**0.009 – 0.053 mm (0.0004 – 0.0020 in.)**

Maximum clearance:

1st and 2nd gear 0.070 mm (0.0028 in.)

If the clearance exceeds the limit, replace the gear, needle roller bearing or shaft.

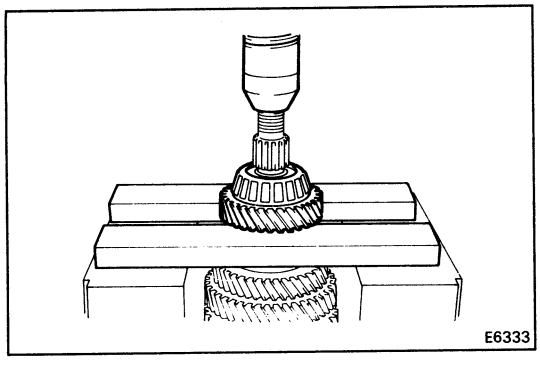
E6333

3. REMOVE OUTPUT SHAFT REAR BEARING, FOURTH DRIVEN GEAR AND SPACER

(a) Using a press, remove the bearing and 4th driven gear.

(b) Remove the spacer.

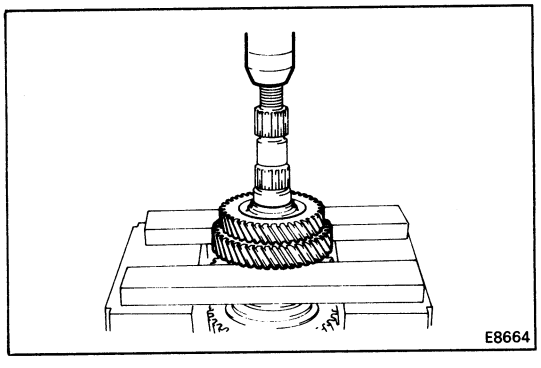
E8664

4. REMOVE THIRD DRIVEN GEAR AND SECOND GEAR

Using a press, remove the 3rd driven gear and 2nd gear.

5. REMOVE NEEDLE ROLLER BEARINGS, SPACER AND SYNCHRONIZER RING

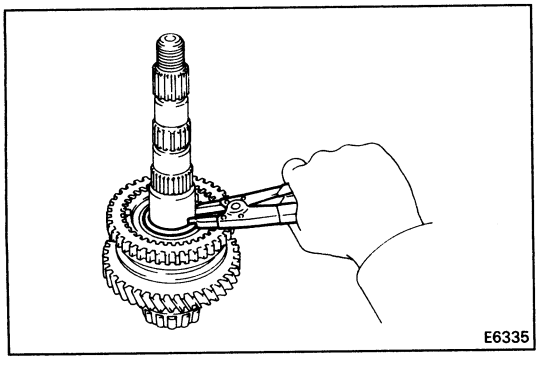
E6335

6. REMOVE SNAP RING

Using snap ring pliers, remove the snap ring.

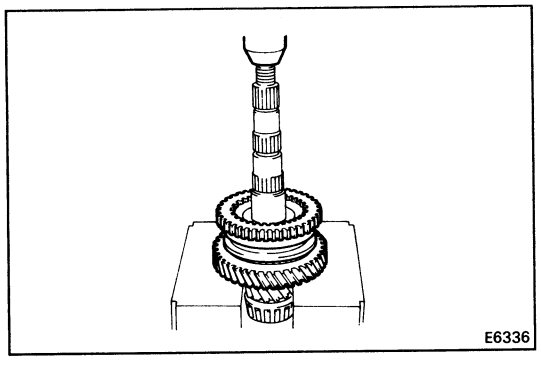
E6336

7. REMOVE NO. 1 HUB SLEEVE ASSEMBLY AND FIRST GEAR

Using a press, remove No. 1 hub sleeve and 1st gear.

8. REMOVE SYNCHRONIZER RING AND NEEDLE ROLLER BEARING

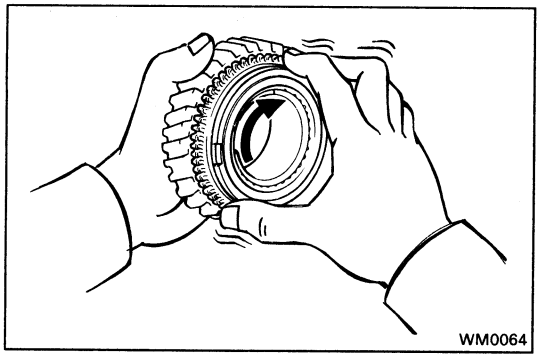

INSPECTION OF OUTPUT SHAFT COMPONENT PARTS

1. INSPECT SYNCHRONIZER RINGS

(a) Check for wear or damage.

(b) Turn the ring and push it in to check the braking action.

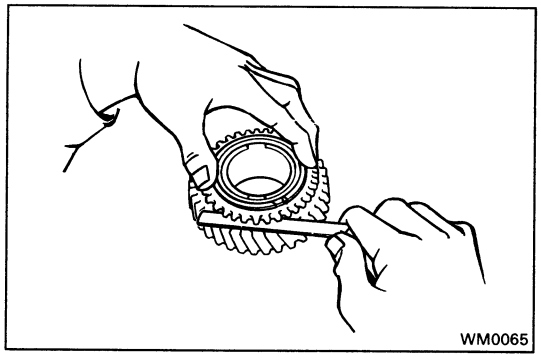

(c) Measure the clearance between the synchronizer ring back and the gear spline end.

Maximum clearance: 0.6 mm (0.024 in.)

If the clearance is less than the limit, replace the synchronizer ring.

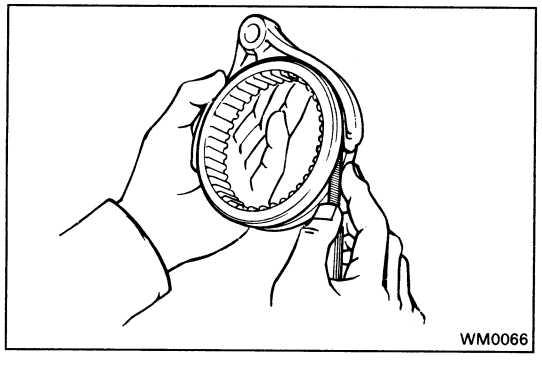

2. MEASURE CLEARANCE OF NO. 1 SHIFT FORK AND HUB SLEEVE

Using a feeler gauge, measure the clearance between the hub sleeve and shift fork.

Maximum clearance: 1.0 mm (0.039 in.)

If the clearance exceeds the limit, replace the shift fork or hub sleeve.

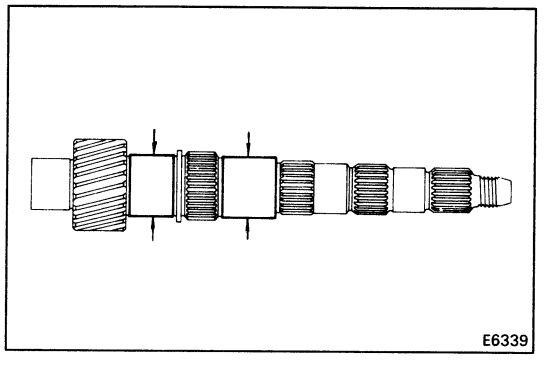

3. INSPECT OUTPUT SHAFT

(a) Check the output shaft for wear or damage.

(b) Using a micrometer, measure the outer diameter of the output shaft journal surface.

Minimum outer diameter: 38.950 mm (1.5335 in.)

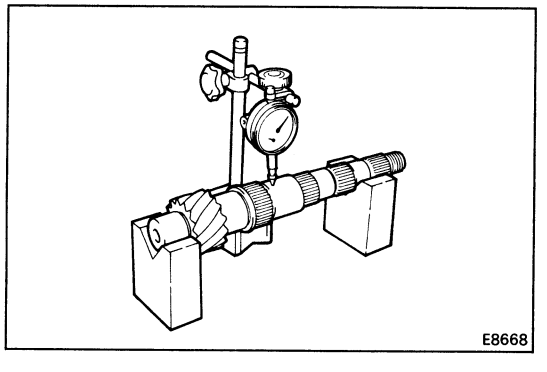

(c) Using a dial indicator, check the shaft runout.

Maximum runout: 0.06 mm (0.0024 in.)

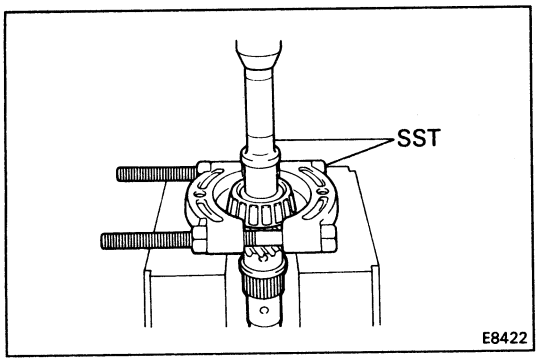

4. IF NECESSARY, REPLACE OUTPUT SHAFT FRONT BEARING

(a) Using SST and a press, remove the bearing.

SST 09307-12010, 09950-00020

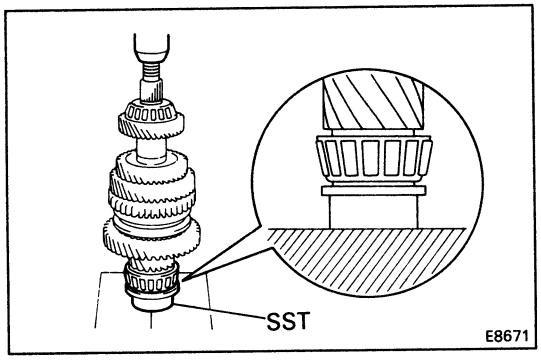

(b) Using SST and a press, install the new bearing.

SST 09316-60010 (09316-00070)

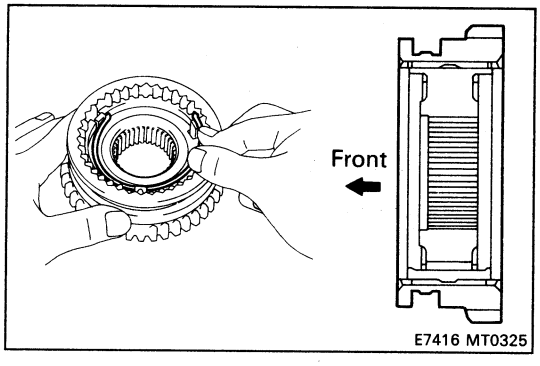

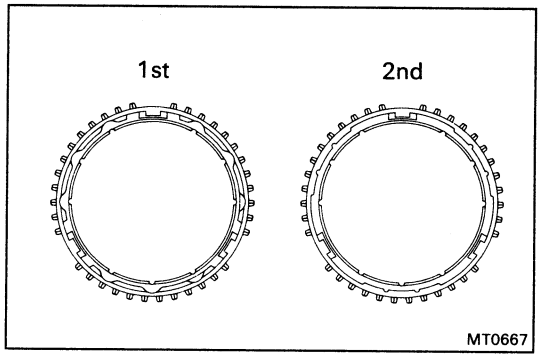

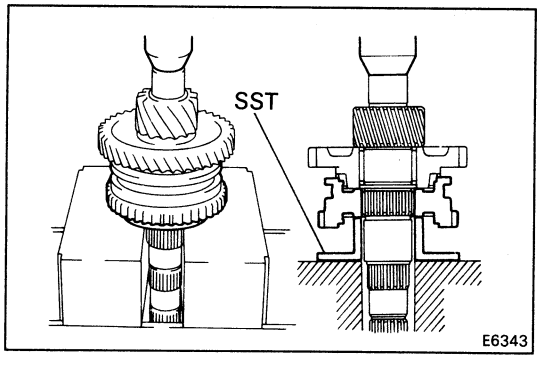

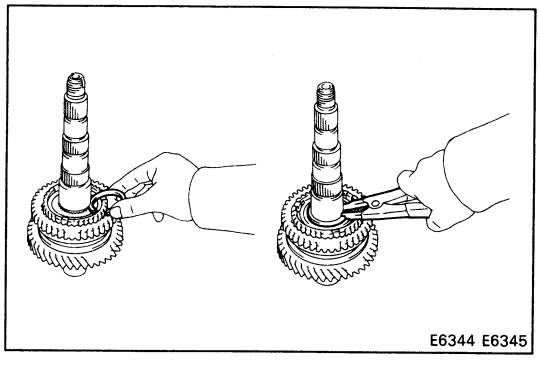

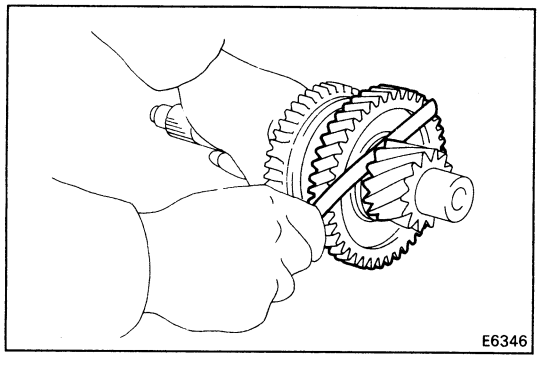

ASSEMBLY OF OUTPUT SHAFT ASSEMBLY

(See page MT-79)

HINT: Coat all of the sliding and rotating surface with gear oil before assembly.

1. INSERT NO. 1 CLUTCH HUB INTO HUB SLEEVE

(a) Install the clutch hub and shifting keys to the hub sleeve.

(b) Install the shifting key springs under the shifting keys.

NOTICE: Install the key springs positioned so that their end gaps are not in line.

2. INSTALL NEEDLE ROLLER BEARING, FIRST GEAR, SYNCHRONIZER RING AND NO. 1 HUB SLEEVE TO OUTPUT SHAFT

(a) Apply MP grease to the needle roller bearings.

(b) Install the 1st gear.

(c) Place the synchronizer ring on the gear and align the ring slots with the shifting keys.

NOTICE: Don't exchange the 1st synchronizer ring and the 2nd synchronizer ring.

(d) Using SST and a press, install the 1st gear and No. 1 hub sleeve.

SST 09316-60010 (09316-00040)

3. INSTALL SNAP RING

Select a snap ring that will allow minimum axial play and install it on the shaft.

Mark	Thickness mm (in.)	Mark	Thickness mm (in.)
A	2.80 (0.1102)	E	3.00 (0.1181)
B	2.85 (0.1122)	F	3.05 (0.1201)
C	2.90 (0.1142)	G	3.10 (0.1220)
D	2.95 (0.1161)		

4. MEASURE FIRST GEAR THRUST CLEARANCE

Using a feeler gauge, measure the 1st gear thrust clearance.

Standard clearance: 0.10 – 0.35 mm (0.0039 – 0.0138 in.)

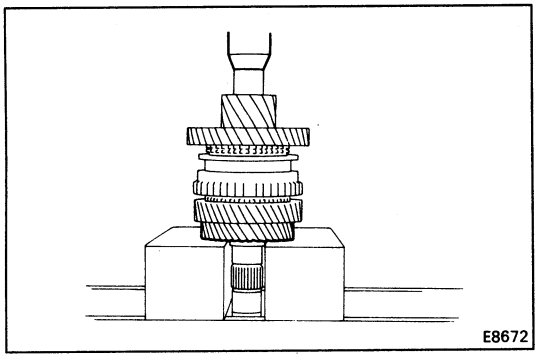

5. INSTALL SPACER, NEEDLE ROLLER BEARING, SYNCHRONIZER RING, SECOND GEAR AND THIRD DRIVEN GEAR

(a) Install the spacer.

(b) Apply MP grease to the needle roller bearing.

(c) Place the synchronizer ring on the gear and aligh the ring slots with the shifting keys.

(d) Install the 2nd gear.

(e) Using a press, install the 3rd driven gear.

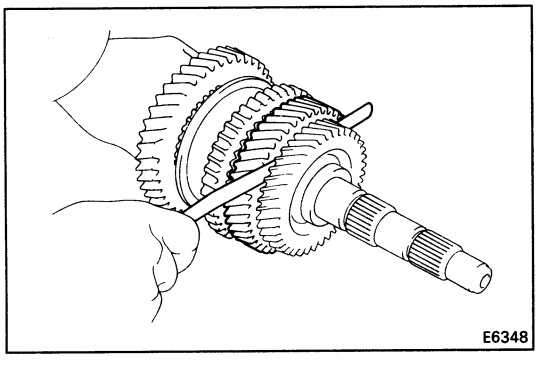

6. MEASURE SECOND GEAR THRUST CLEARANCE

Using a feeler gauge, measure the 2nd gear thrust clearance.

Standard clearance: 0.10 – 0.45 mm (0.0039 – 0.0177 in.)

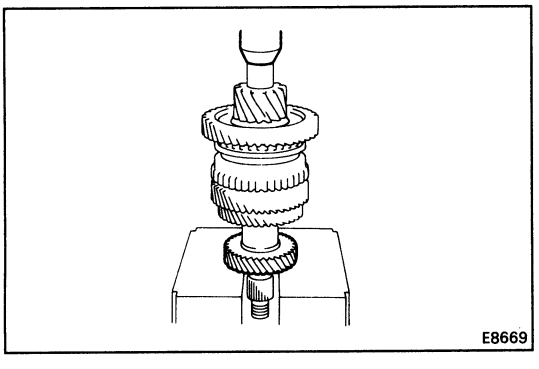

7. INSTALL SPACER AND FOURTH DRIVEN GEAR

(a) Install the spacer.

(b) Using a press, install the 4th driven gear.

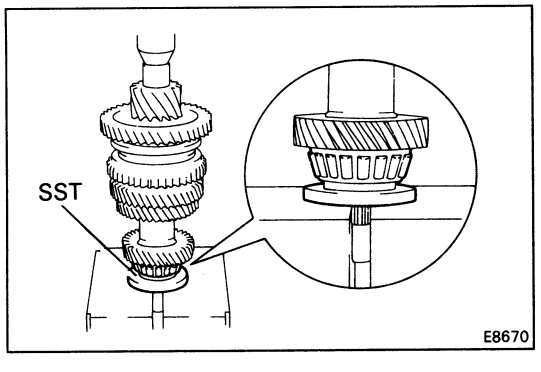

8. INSTALL OUTPUT SHAFT REAR BEARING

Using SST and a press, install the bearing.

SST 09506-30012

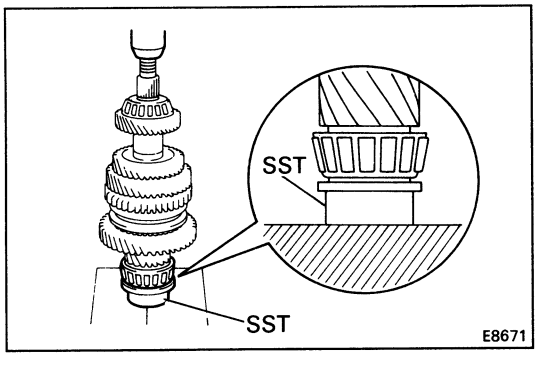

9. INSTALL OUTPUT SHAFT FRONT BEARING

Using SST and a press, install the bearing.

SST 09316-60010 (09316-00070)

Oil Pump Assembly

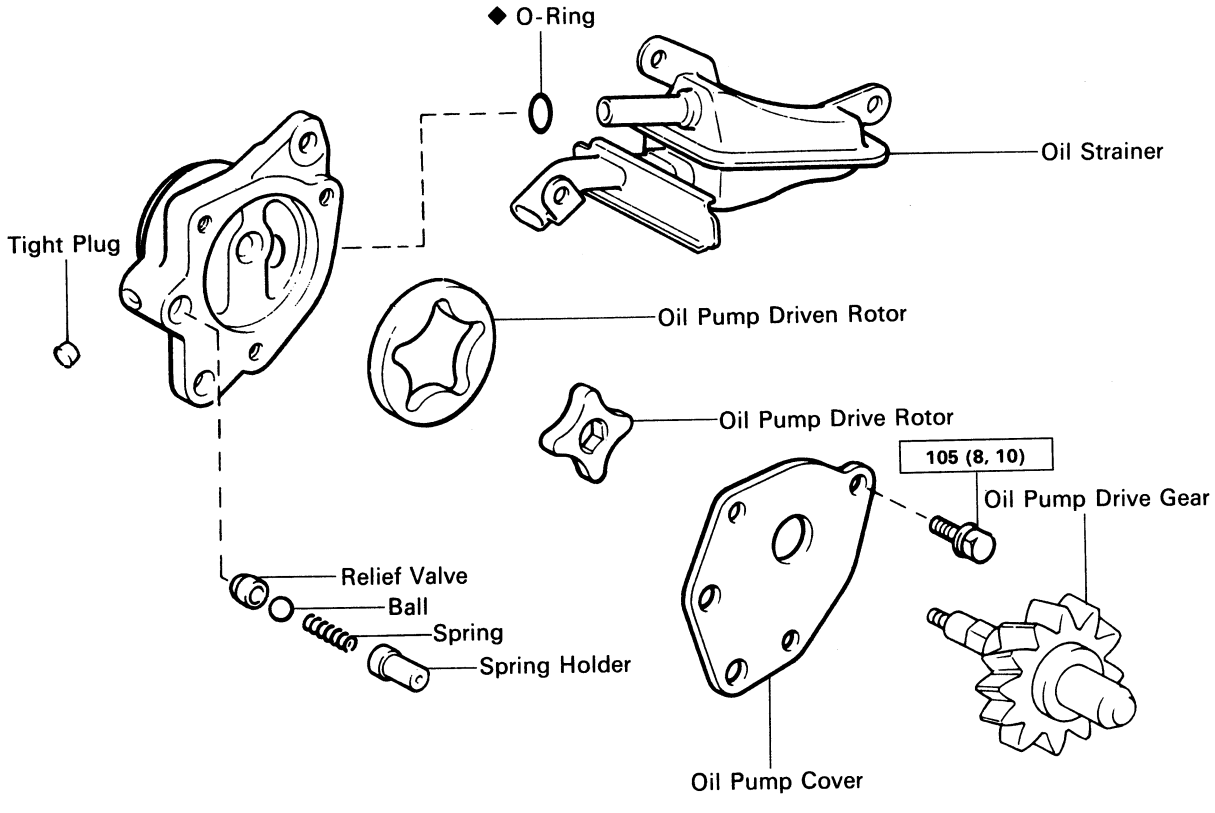

kg-cm (ft-lb, N·m) : Specified torque
◆ Non-reusable part

MT0643

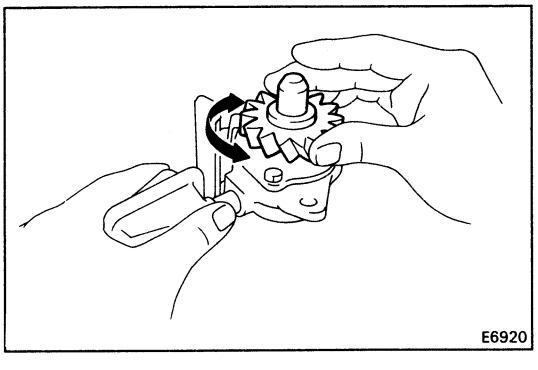

DISASSEMBLY OF OIL PUMP

1. CHECK OPERATION OF OIL PUMP

Install the oil pump drive gear to the drive rotor, check that the drive rotor turn smoothly.

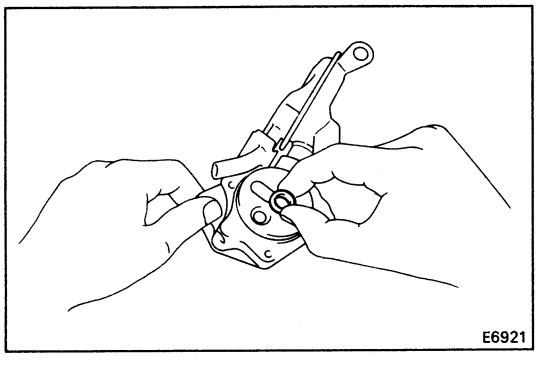

2. REMOVE GASKET TO OIL PUMP CASE

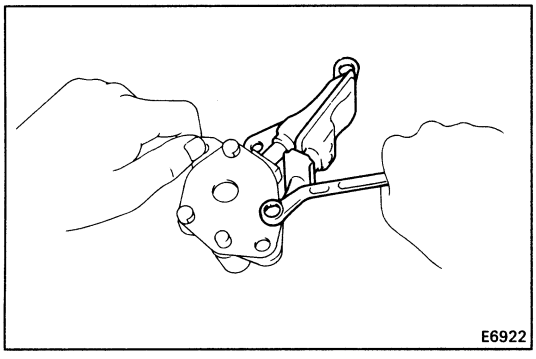

3. **REMOVE BOLT AND OIL STRAINER**

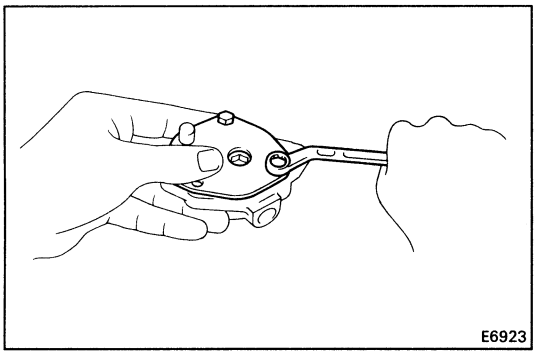

4. **REMOVE OIL PUMP COVER**

(a) Hold the oil pump cover, remove the two bolts and a cover.

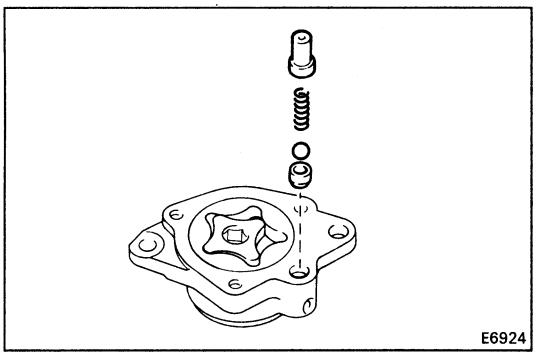

(b) Remove the spring holder, spring, ball and relief valve seat.

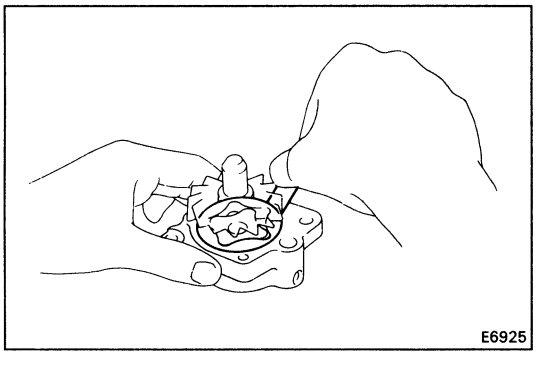

5. **CHECK ROTOR BODY CLEARANCE**

(a) Install the oil pump drive gear to the drive rotor.

(b) Using a feeler gauge, measure the body clearance between the drive rotor and oil pump case.

Standard clearance: **0.10 – 0.16 mm (0.004 – 0.006 in.)**
Maximum clearance: **0.30 mm (0.012 in.)**

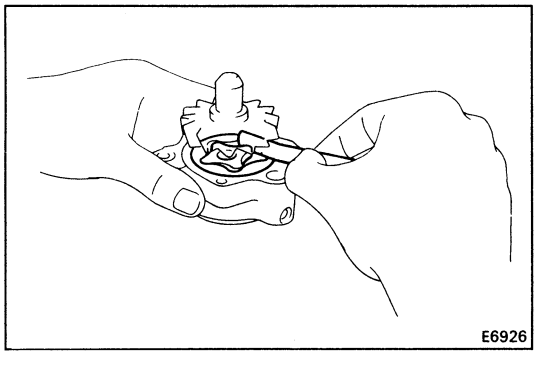

6. **CHECK ROTOR TIP CLEARANCE**

(a) Install the oil pump drive gear to the drive rotor.

(b) Using a feeler gauge, measure the tip clearance between the drive and driven rotors.

Standard clearance: **0.08 – 0.15 mm (0.003 – 0.006 in.)**
Maximum clearance: **0.30 mm (0.012 in.)**

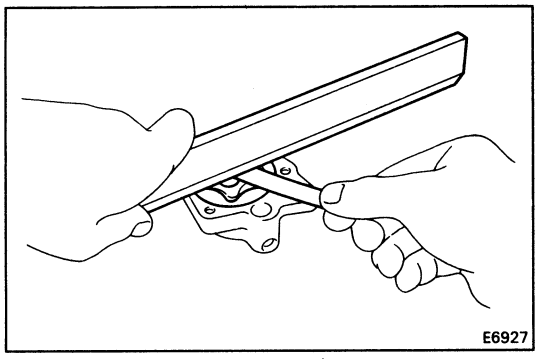

7. CHECK SIDE CLEARANCE

Using a precision straight edge and feeler gauge, measure the side clearance of both rotors.

Standard clearance: **0.03 – 0.08 mm (0.001 – 0.003 in.)**
Maximum clearance: **0.15 mm (0.006 in.)**

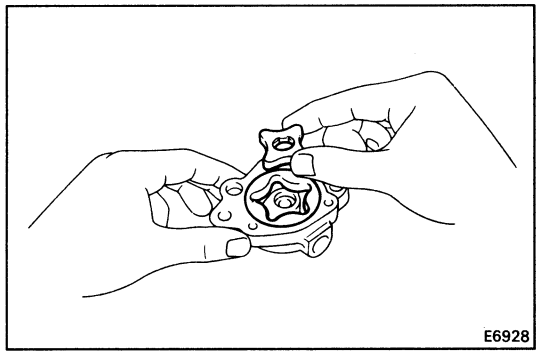

8. REMOVE OIL PUMP DRIVE ROTOR AND DRIVEN ROTOR

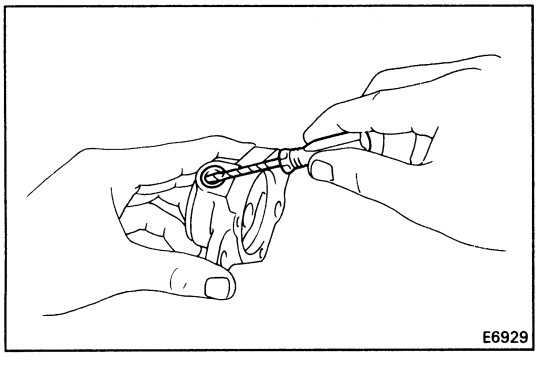

9. IF NECESSARY, REPLACE O-RING

(a) Using a screwdriver, remove the o-ring.

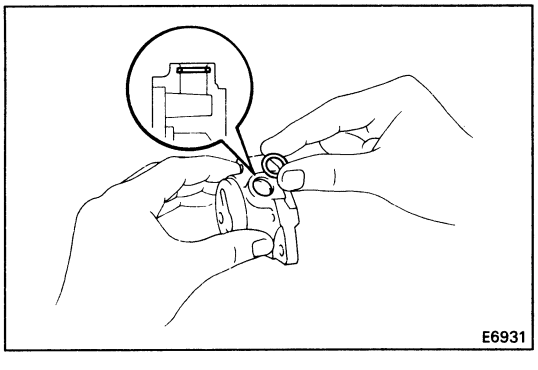

(b) Apply gear oil to the o-ring.
(c) Install the o-ring.

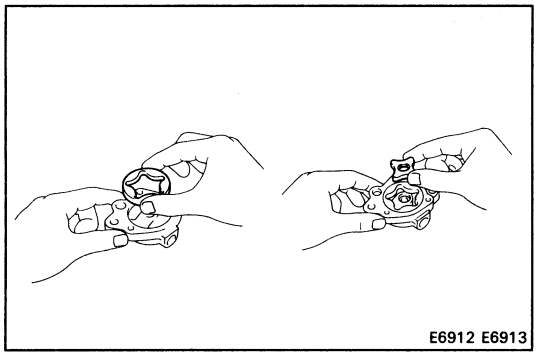
E6912 E6913

ASSEMBLY OF OIL PUMP

(See page MT-85)

1. INSTALL DRIVEN ROTOR AND DRIVE ROTOR

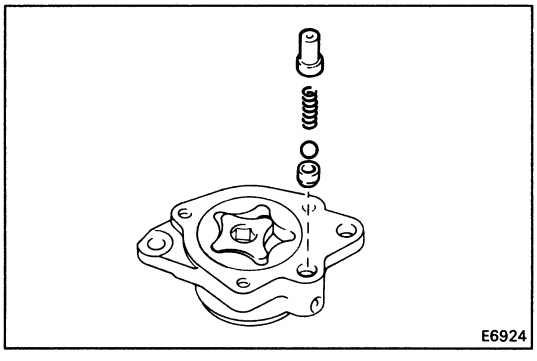
E6924

2. INSTALL OIL PUMP COVER

(a) Install the relief valve, ball, spring and spring holder to the oil pump case.

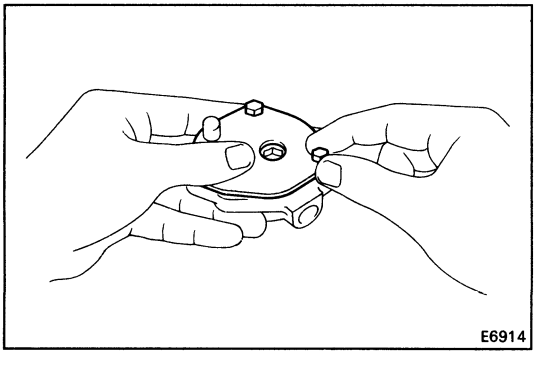
E6914

(b) Hold the oil pump cover, temporarily install the two bolts.

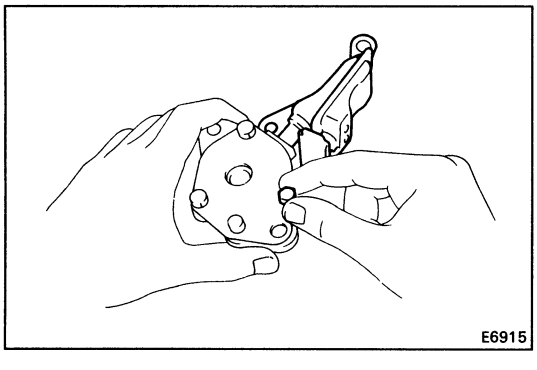
E6915

3. INSTALL OIL STRAINER

Install the oil strainer to the oil pump case, temporarily install the bolt.

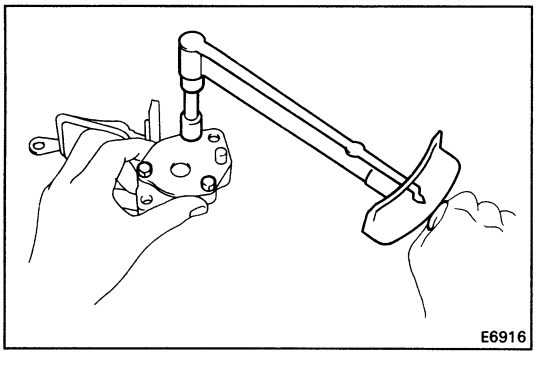
E6916

4. TORQUE OIL PUMP COVER BOLTS

Torque the three bolts evenly.

Torque: 105 kg-cm (8 ft-lb, 10 N·m)

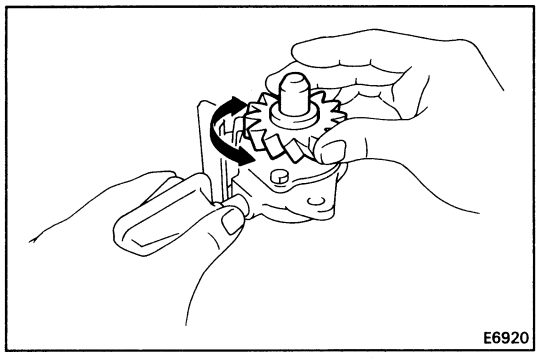

5. CHECK OPERATION OF OIL PUMP

Insert the oil pump drive gear to the drive rotor, check that the drive rotor turn smoothly.

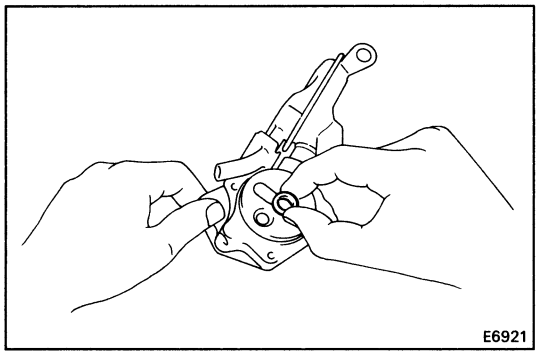

6. INSTALL GASKET

Install the new gasket to the oil pump case.

Shift and Select Lever Assembly

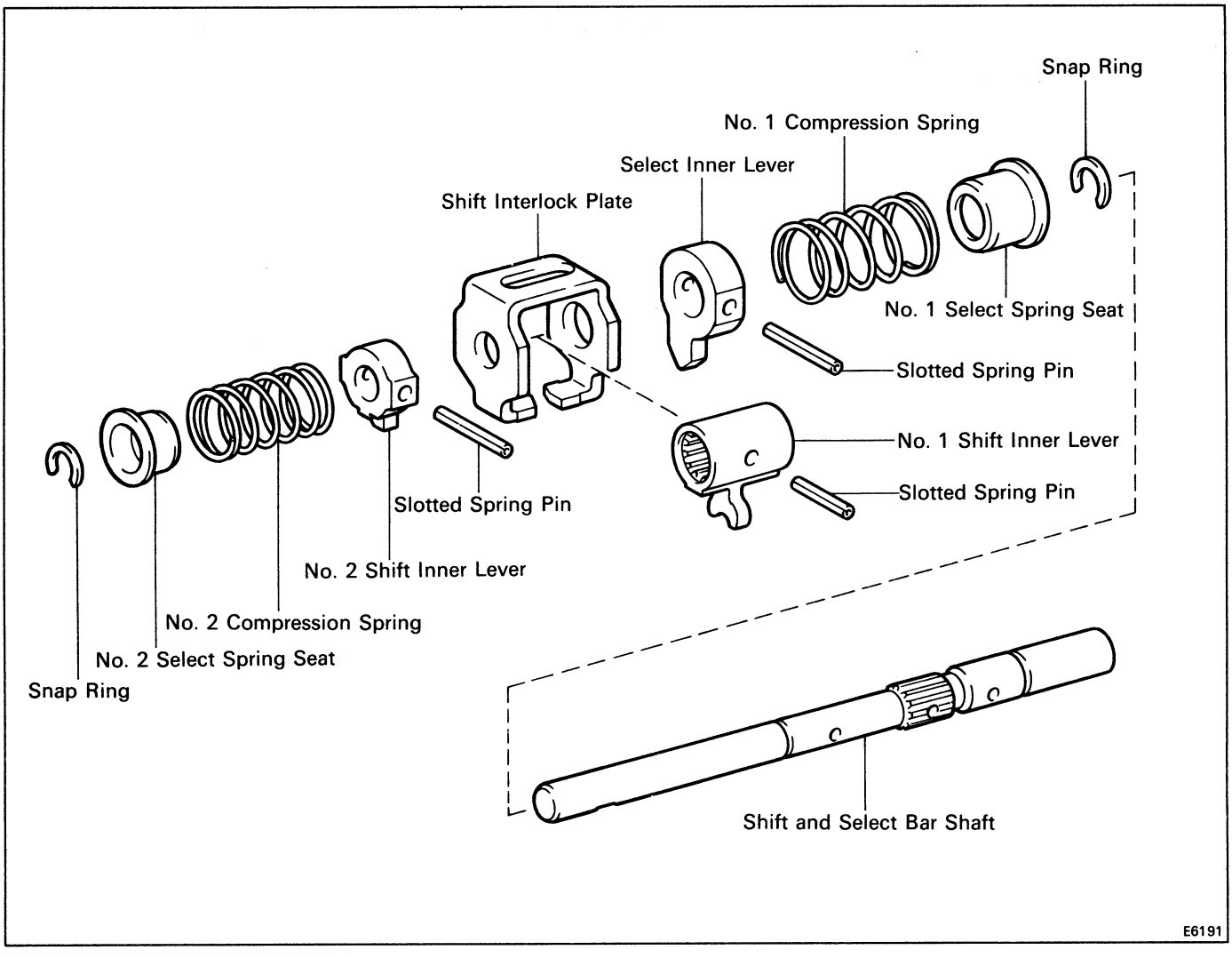

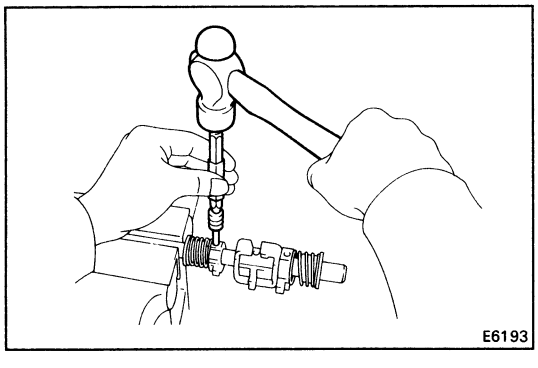

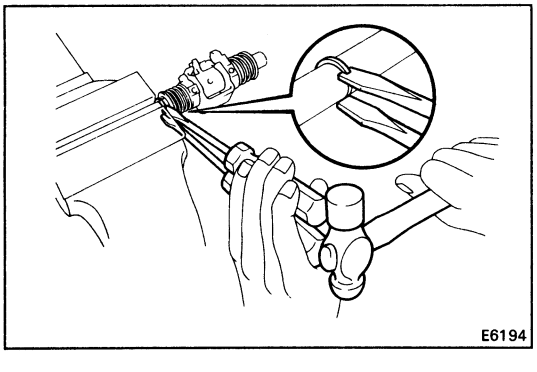

DISASSEMBLY OF SHIFT AND SELECT LEVER ASSEMBLY

1. REMOVE NO. 2 SHIFT INNER LEVER

(a) Using a pin punch and hammer, drive out the slotted spring pin.

(b) Using two screwdrivers and a hammer, remove the snap ring.

(c) Remove the No. 2 select spring seat, No. 2 compression spring and No. 2 shift inner lever.

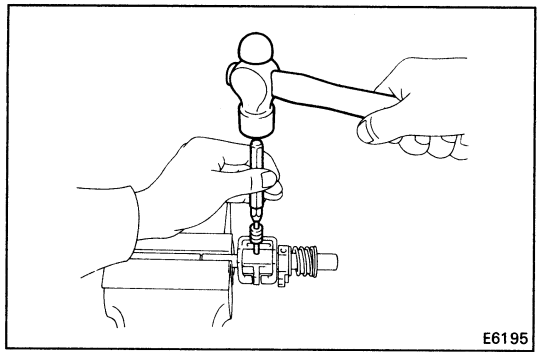

2. REMOVE SHIFT INTER PLATE AND NO. 1 SHIFT INNER LEVER

(a) Using a pin punch and hammer, drive out the slotted spring pin.

(b) Remove the shift inter plate and No. 1 shift inner lever.

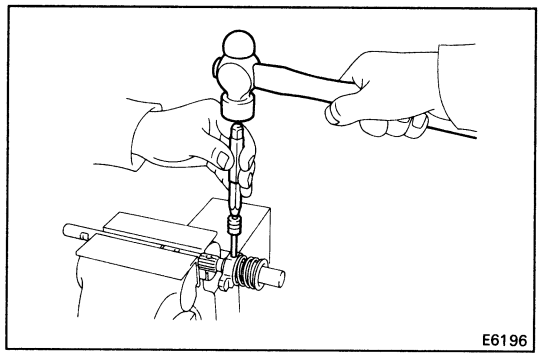

3. REMOVE SELECT INNER LEVER

(a) Using a pin punch and hammer, drive out the slotted spring pin.

(b) Remove the select inner lever, No. 1 compression spring and No. 1 select spring seat.

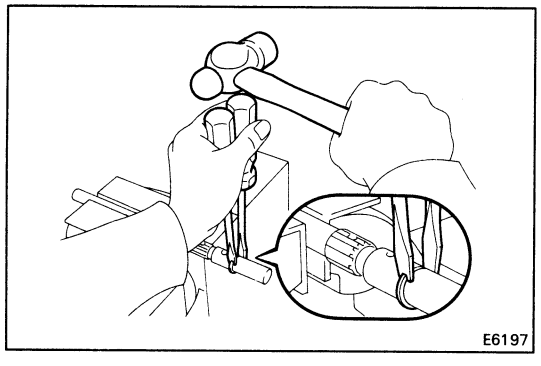

4. REMOVE SNAP RING

Using two screwdrivers and a hammer, remove the snap ring.

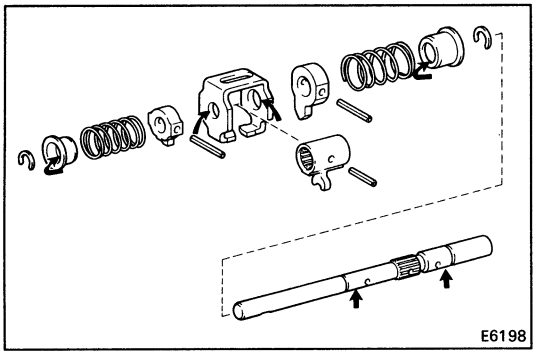

ASSEMBLY OF SHIFT AND SELECT LEVER ASSEMBLY

1. COAT SHAFT WITH MP GREASE, AS SHOWN

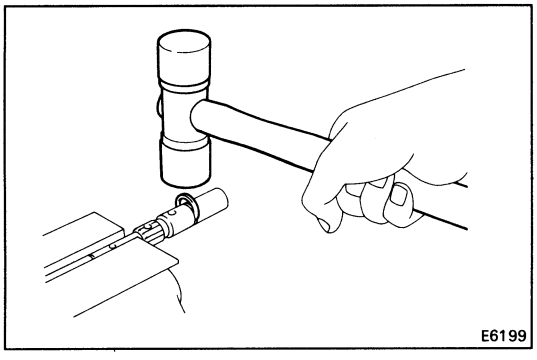

2. INSTALL SNAP RING

Using a plastic hammer, install the snap ring.

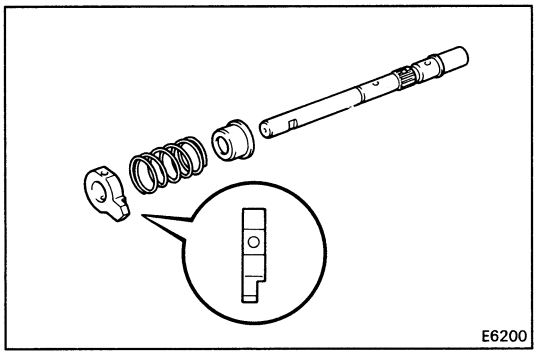

3. INSTALL SELECT INNER LEVER

(a) Install the No. 1 select spring seat, No. 1 compression spring and select inner lever.

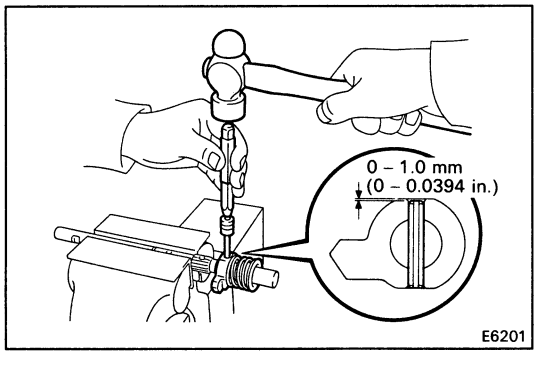

(b) Using a pin punch hammer, drive in the slotted spring pin.

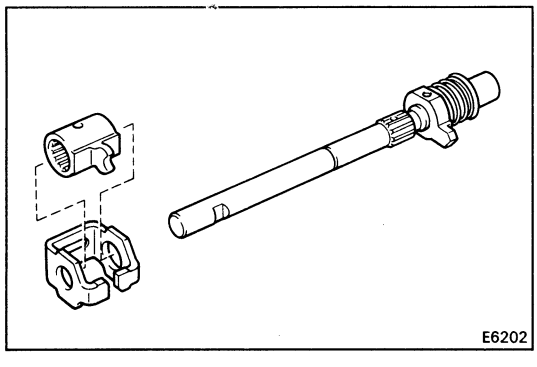

4. INSTALL SHIFT INTERLOCK PLATE AND NO. 1 SHIFT INNER LEVER

(a) Install the shift interlock plate No. 1 shift inner lever.

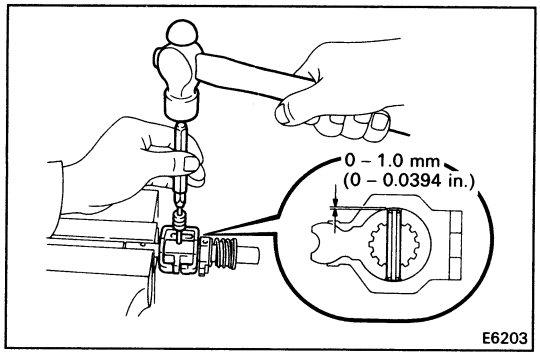

(b) Using a pin punch and hammer, drive in the slotted spring pin.

(c) Check that the shift interlock plate turn smoothly.

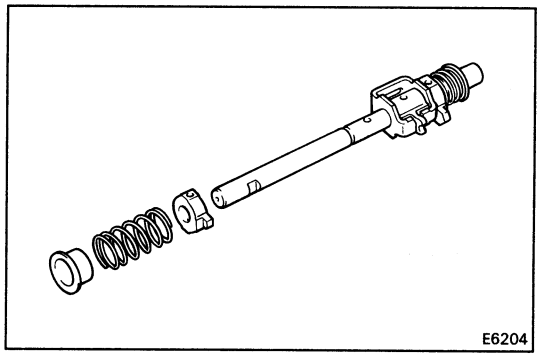

5. INSTALL NO. 2 SHIFT INNER LEVER

(a) Install the No. 2 shift inner lever, No. 2 compression spring and No. 2 select spring seat.

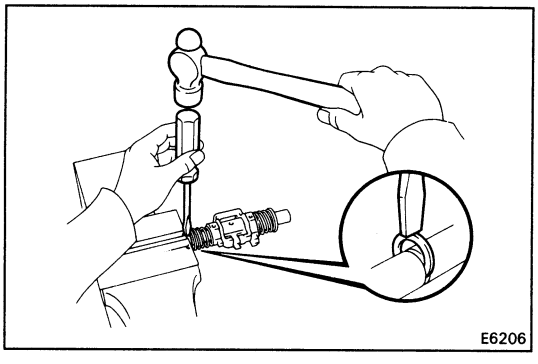

(b) Using a screwdriver and hammer, install the snap ring.

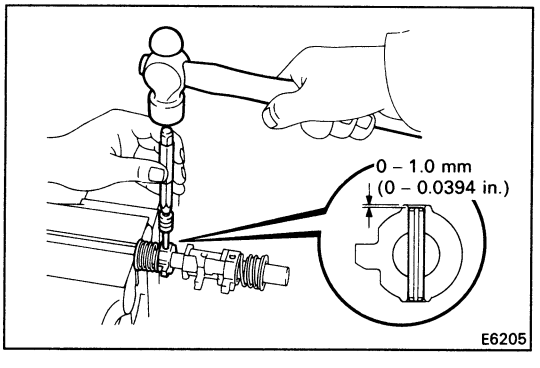

(c) Using a pin punch and hammer, drive in the slotted spring pin.

Differential

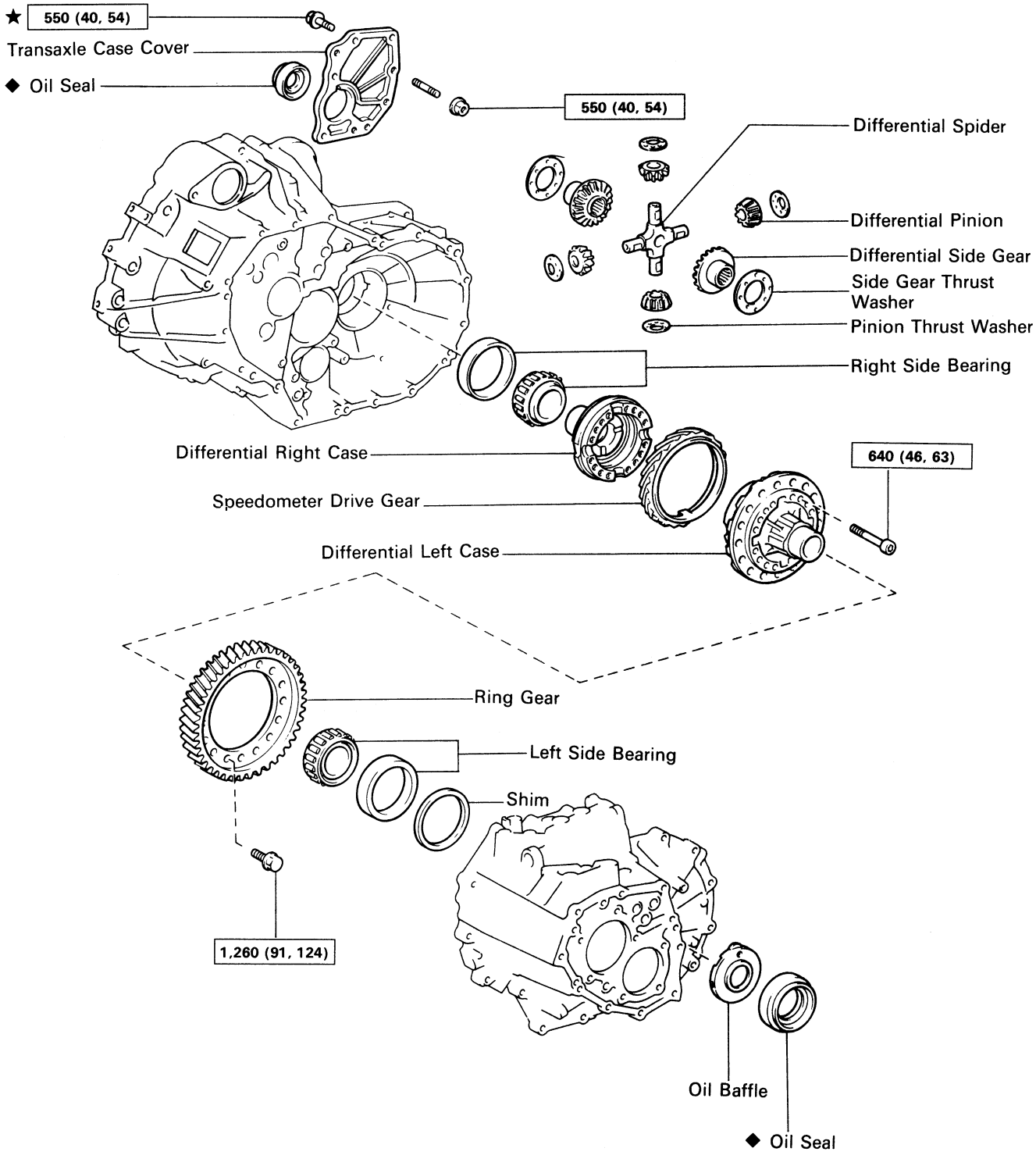

kg-cm (ft-lb, N·m) : Specified torque
◆ Non-reusable part
★ Precoated part

MT0721

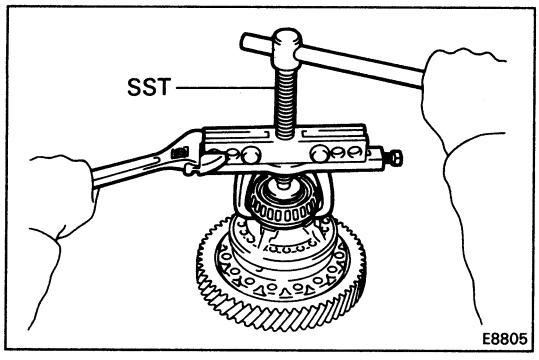

DISASSEMBLY OF DIFFERENTIAL CASE

1. REMOVE SIDE BEARING

Using SST, remove the two side bearings.

SST 09950-20017

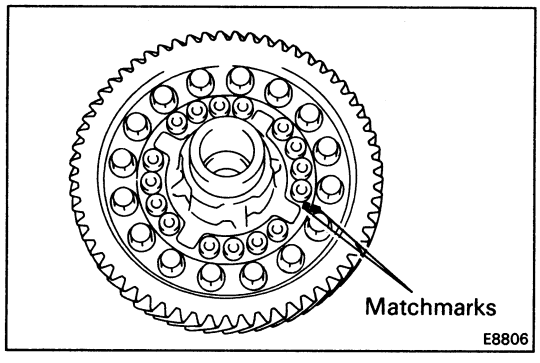

2. REMOVE RING GEAR

(a) Place the matchmarks on both the differential case and ring gear.

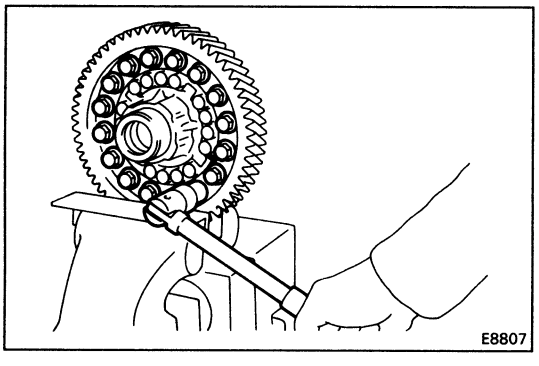

(b) Remove the sixteen bolts.

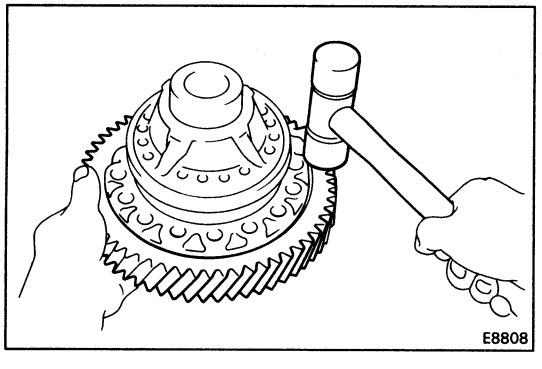

(c) Using a plastic hammer, tap out the ring gear.

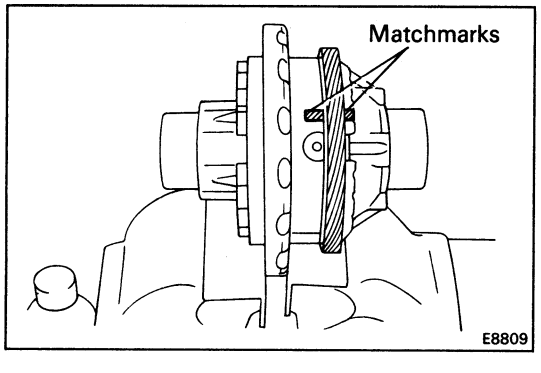

3. DISASSEMBLE OF DIFFERENTIAL CASE

(a) Place the matchmarks on the differential right and left case.

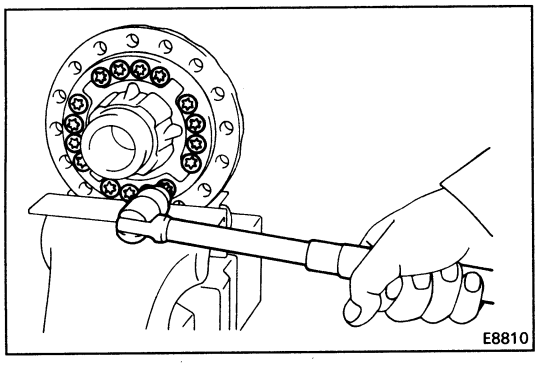

(b) Using a torx wrench, remove the sixteen torx screws.

Torx wrench T50 09042-00040

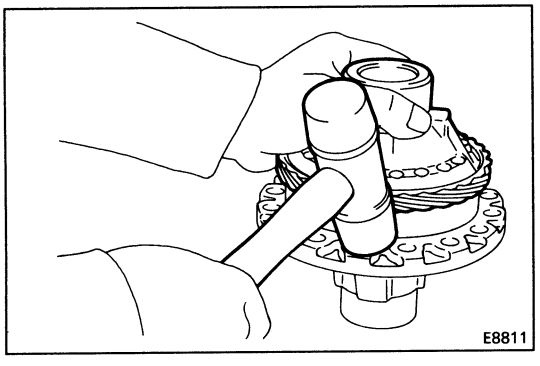

(c) Using a plastic hammer, tap out the differential left case.

(d) Remove the speedometer drive gear from the differential right case.

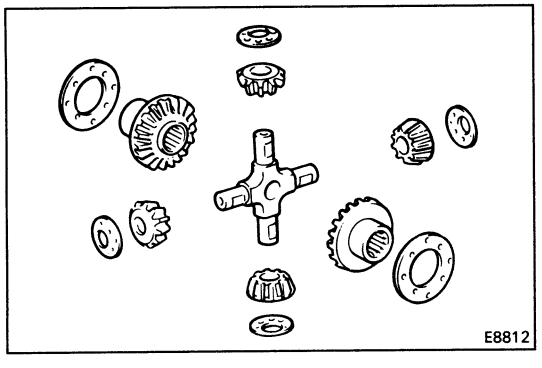

(e) Remove the two differential side gears, two side thrust washers, differential spider, four differential pinions and four pinion washers from the differential left case.

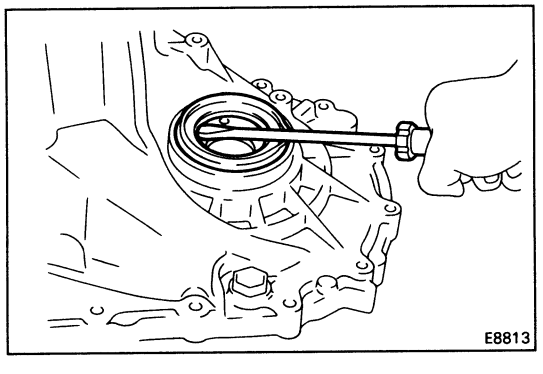

4. **(Transmission Case Side)**
IF NECESSARY, REPLACE OIL SEAL AND TAPER ROLLER BEARING OUTER RACE

(a) Using a screwdriver, remove the oil seal.

(b) Remove the transmission oil baffle.

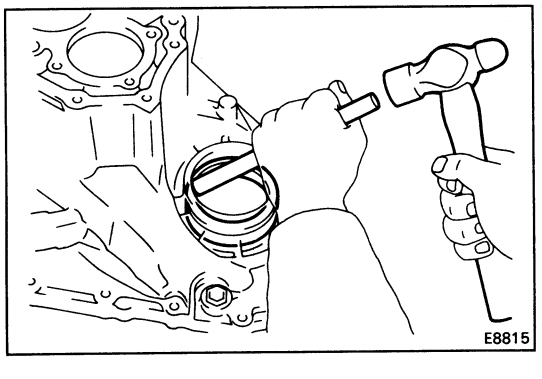

(c) Using a brass bar and hammer, drive out the bearing outer race lightly and evenly.

(d) Remove the shim.

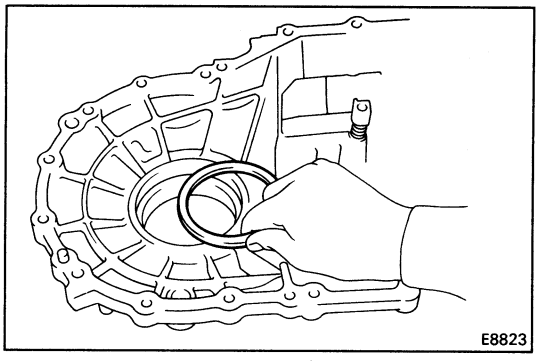

(e) Install the shim.
(See page MT-94)

HINT: First select and install a shim of lesser thickness than before.

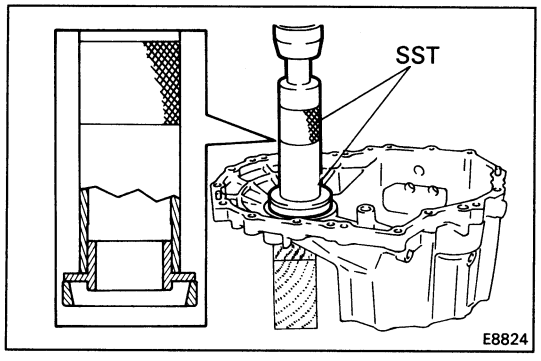

(f) Using SST and a press, install the taper roller bearing outer race.

SST 09316-60010 (09316-00010, 09316-00040)

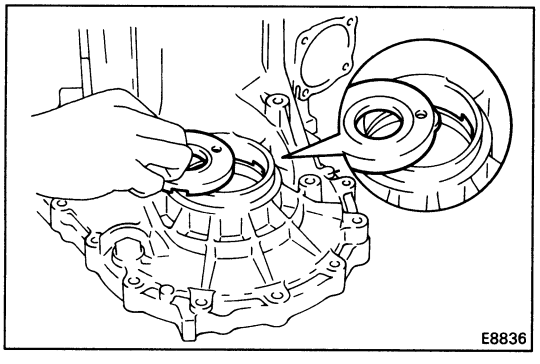

(g) Install the transmission oil baffle.

HINT: Install the transmission oil baffle projection into the case side cutout.

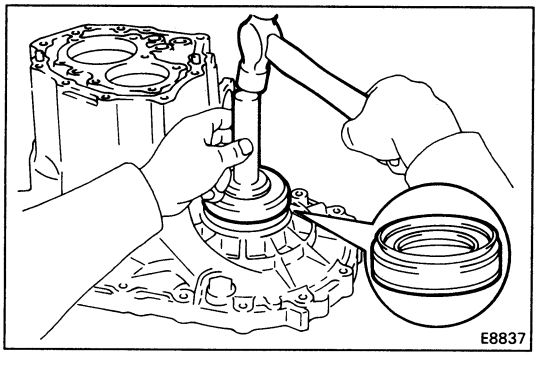

(h) Using SST and a hammer, drive in a new oil seal.

SST 09223-15010

(i) Coat the lip of oil seal with MP grease.

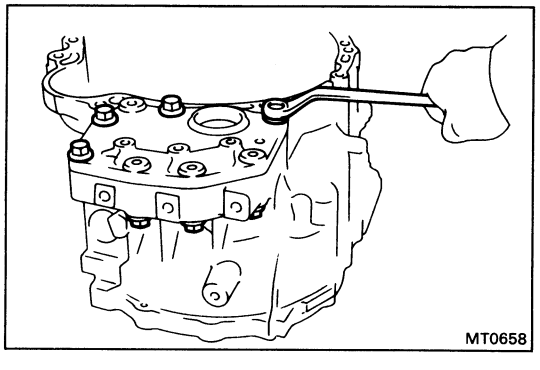

5. (Transaxle Case Side)
IF NECESSARY, REPLACE OIL SEAL AND TAPER ROLLER BEARING OUTER RACE

(a) Remove the four bolts and three nuts.

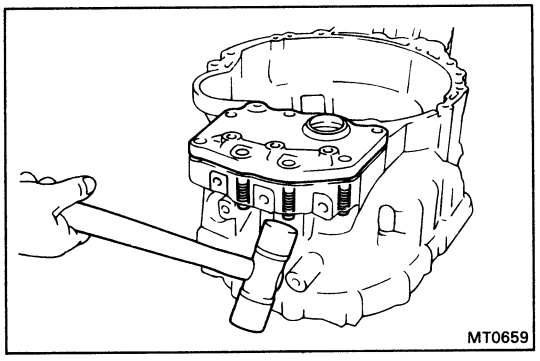

(b) Using a plastic hammer, tap the stud bolts and remove the transaxle case cover.

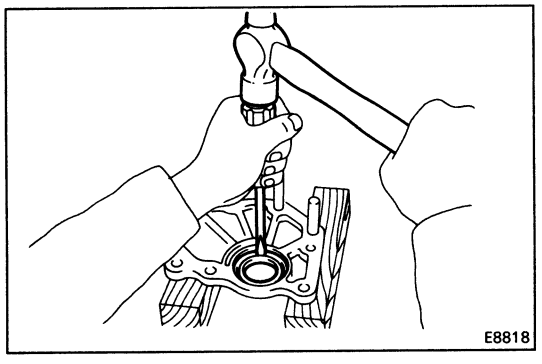

(c) Using a screwdriver and hammer, drive out the oil seal.

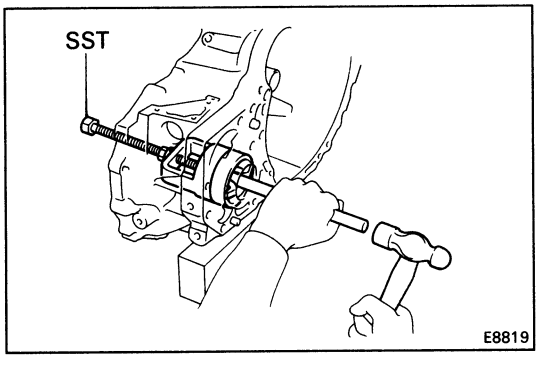

(d) Using SST, brass bar and hammer, remove the taper roller bearing outer race.

SST 09612-65014 (09612-01020)

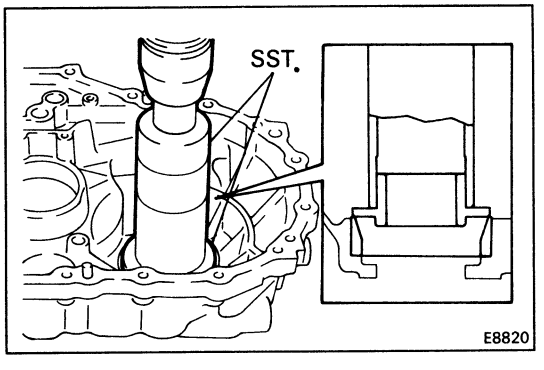

(e) Using SST and a hammer, install the taper roller bearing.

SST 09316-60010 (09316-00010, 09316-00040)

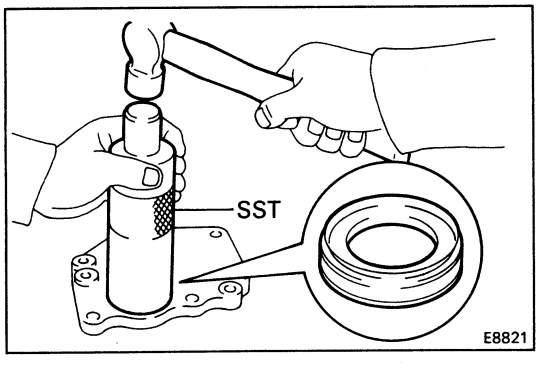

(f) Using SST and a hammer, drive in a new oil seal.

SST 09316-60010 (09316-00010)

(g) Coat the lip of oil seal with MP grease.

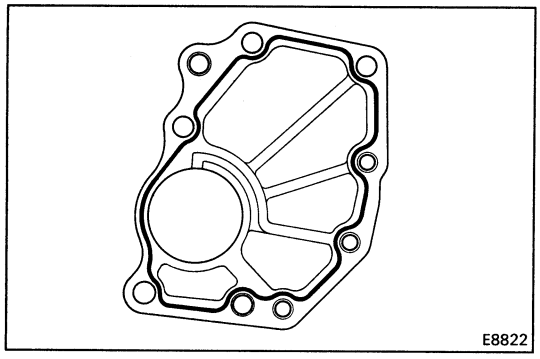
E8822

(h) Remove any packing material and be careful not to drop oil on the contacting surfaces of the transaxle case or case cover.

(i) Apply seal packing to the transaxle case cover as shown in the figure.

Seal packing: Part No. 08826-00090, THREE BOND 1281 or equivalent

HINT: Install the transaxle case cover as soon as the seal packing is applied.

(j) Apply liquid sealant to the bolt threads.

Sealant: Part No. 08833-00080, THREE BOND 1344, LOCTITE 242 or equivalent

(k) Install and torque the four bolts and three nuts.

Torque: 550 kg-cm (40 ft-lb, 54 N·m)

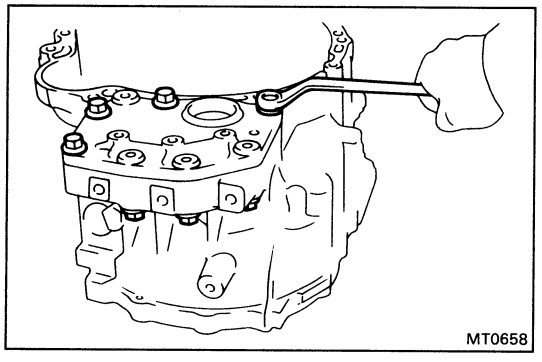
MT0658

6. ASSEMBLE OF DIFFERENTIAL CASE

HINT: Coat all of the sliding and rotating surface with gear oil before assembly.

(a) Install the thrust washer to the side gear.

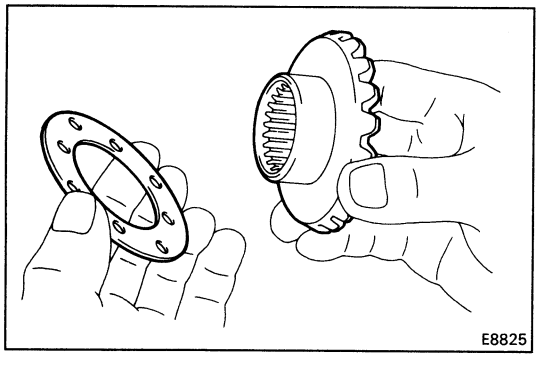
E8825

(b) Install the four pinions and thrust washers to the spider.

(c) Install the side gear and spider with four pinions to the differential left case.

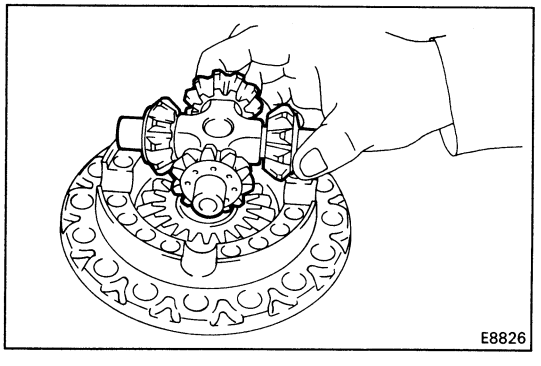
E8826

(d) Using a dial indicator, measure the backlash of one pinion gear while holding the No. 2 differential case.

Standard backlash: 0.05 – 0.20 mm (0.0020 – 0.0079 in.)

HINT: Push the pinion gear of the left side of the differential case.

(e) Install the side gear and spider with four pinions to the right side of the differential case.
And check the side gear backlash.

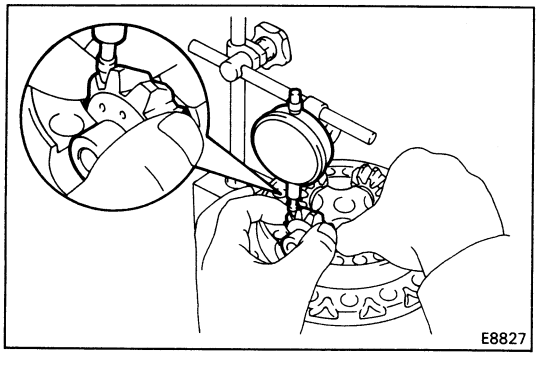
E8827

(f) Referring to the table below, select the thrust washer which will ensure that the backlash is within specification. Try to select a washer of the same size.

Mark	Thickness mm (in.)	Mark	Thickness mm (in.)
–	0.80 (0.0315)	–	1.20 (0.0472)
–	0.90 (0.0354)	–	1.30 (0.0512)
–	1.00 (0.0394)	–	1.40 (0.0551)
–	1.10 (0.0433)		

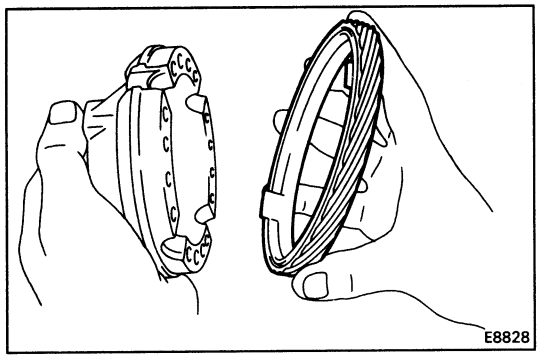

(g) Install the speedometer driven gear.

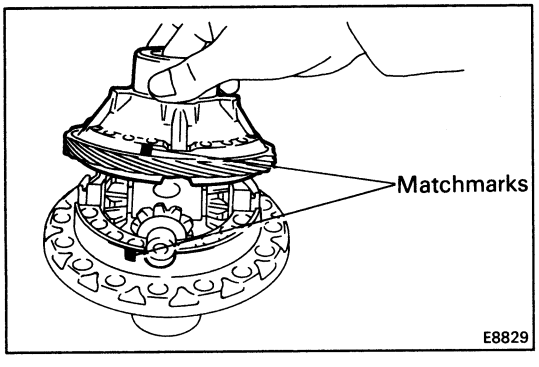

(h) Align the matchmarks on the differential cases.

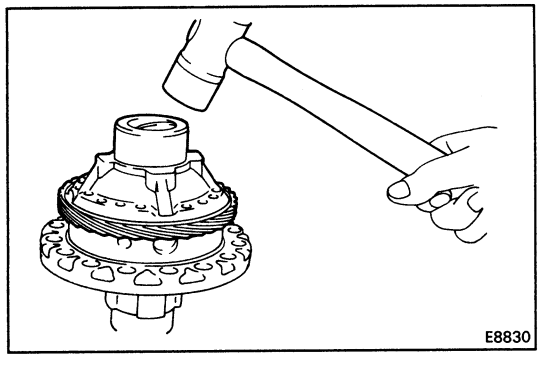

(i) Using plastic hammer, carefully tap the differential case.

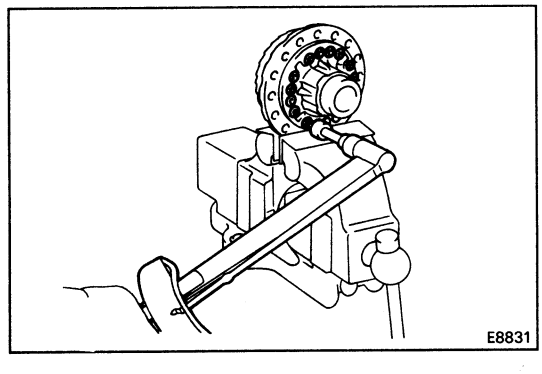

(j) Using a torx wrench, install and torque the sixteen torx screws.

Torx wrench T50 09042-00040

Torque: 640 kg-cm (46 ft-lb, 63 N·m)

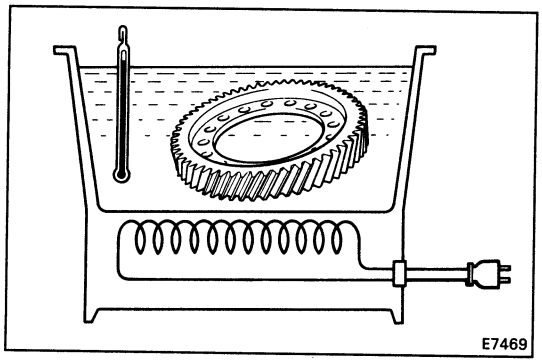

7. INSTALL RING GEAR

(a) Clean the contact surface of the differential case.

(b) Heat the ring gear to about 100°C (212°F) in an oil bath.

NOTICE: Do not heat the ring gear above 110°C (230°F)

(c) Clean the contact surface of the ring gear with cleaning solvent.

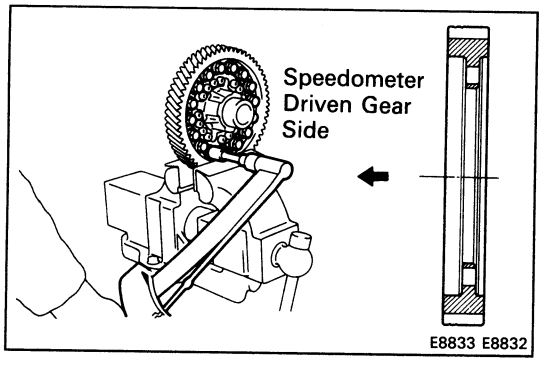

(d) Quickly install the ring gear on the differential case. Install the sixteen bolts.

HINT: Align the matchmarks on the differential left case and contact the ring gear.

(e) Tighten the set bolts uniformly and a little at a time. Torque the bolts.

Torque: 1,260 kg-cm (91 ft-lb, 124 N·m)

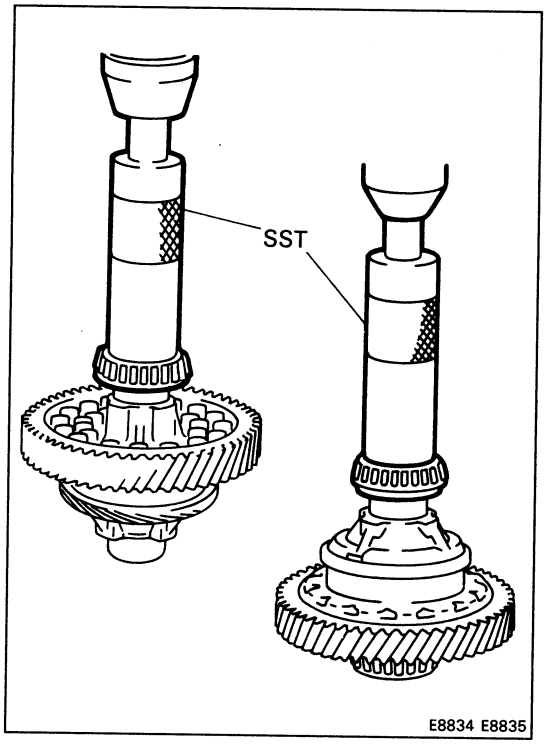

8. INSTALL SIDE BEARING

Using SST and a press, install the side bearings onto the differential case.

SST 09316-60010 (09316-00010)

HINT: Press the bearing on the ring gear side first.

9. ADJUST OUTPUT SHAFT ASSEMBLY PRELOAD
(See pages MT-104 and 105)

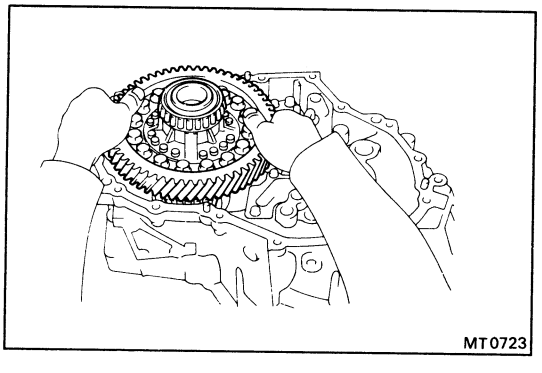

10. INSTALL DIFFERENTIAL CASE ASSEMBLY

Install the differential case assembly to the transaxle case.

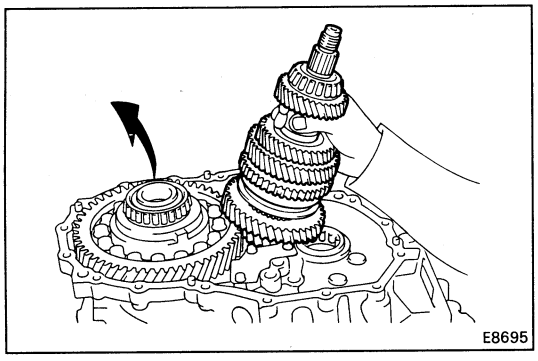

11. INSTALL OUTPUT SHAFT ASSEMBLY

Lift up the differential case, install the input shaft assembly.

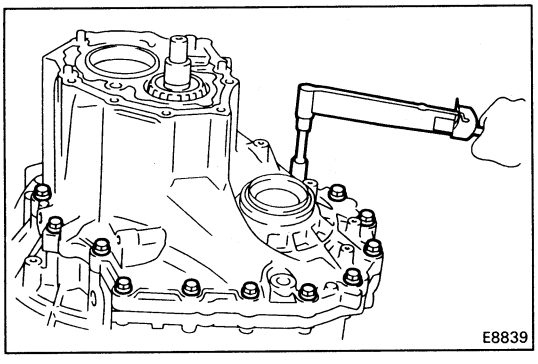

12. INSTALL TRANSMISSION CASE

(a) Install the transmission case.

HINT: If necessary, tap on the case with a plastic hammer.

(b) Install and torque the seventeen bolts.

Torque: 300 kg-cm (22 ft-lb, 29 N·m)

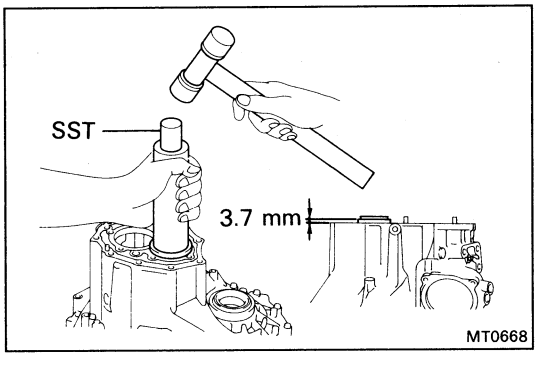

13. INSTALL OUTPUT SHAFT REAR TAPERED ROLLER BEARING OUTER RACE

Using SST and a hammer, install the output shaft rear tapered roller bearing outer race.

SST 09316-60010 (09316-00010)

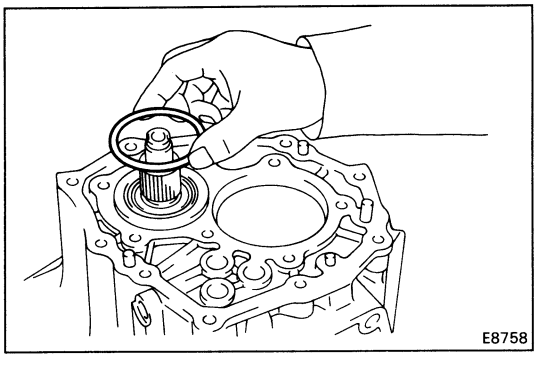

14. INSTALL SHIM
(See page MT-105)

HINT: Install the previously selected shim.

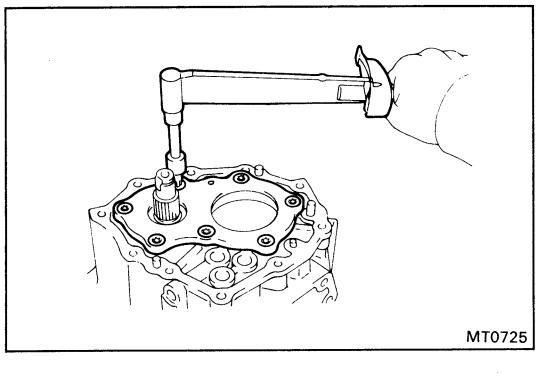

15. INSTALL REAR BEARING RETAINER

Using a torx wrench, install and torque the seven torx screws.

Torx wrench T45 09042-00050

Torque: 430 kg-cm (31 ft-lb, 42 N·m)

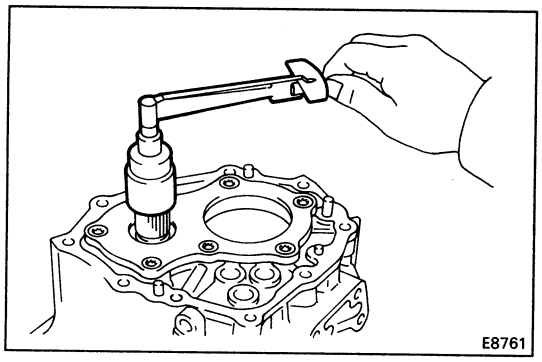

16. ADJUST DIFFERENTIAL CASE PRELOAD

(a) Install the new lock nut to the output shaft.

(b) Turn the output shaft right and left two or three times to allow the bearings to settle.

(c) Using a torque wrench, measure the preload.

Preload (at starting):
New bearing
Add output shaft preload
1.9 – 3.7 kg-cm (1.6 – 3.2 in.-lb, 0.2 – 0.4 N·m)
Reused bearing
Add output shaft preload
1.2 – 2.3 kg-cm (1.0 – 2.0 in.-lb, 0.1 – 0.2 N·m)

If the preload is not within specification, select the thrust washers.

HINT: The total preload will change about 1 – 2 kg-cm (0.9 – 1.7 in.-lb, 0.1 – 0.2 N·m) with each shim thickness.

Mark	Thickness mm (in.)	Mark	Thickness mm (in.)
0	2.00 (0.0787)	9	2.45 (0.0965)
1	2.05 (0.0807)	A	2.50 (0.0984)
2	2.10 (0.0827)	B	2.55 (0.1004)
3	2.15 (0.0846)	C	2.60 (0.1024)
4	2.20 (0.0866)	D	2.65 (0.1043)
5	2.25 (0.0886)	E	2.70 (0.1063)
6	2.30 (0.0906)	F	2.75 (0.1083)
7	2.35 (0.0925)	G	2.80 (0.1102)
8	2.40 (0.0945)	H	2.85 (0.1122)

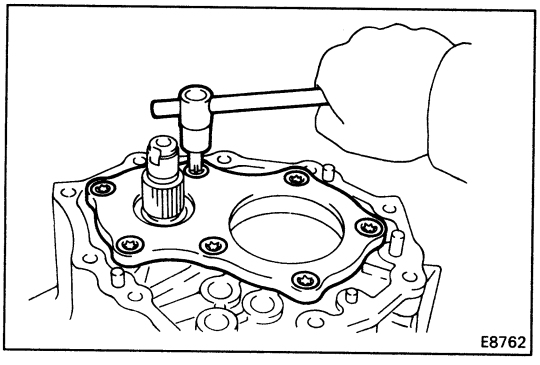

17. REMOVE REAR BEARING RETAINER

Using torx wrench, remove the seven torx screws and rear bearing retainer.

Torx wrench T45 09042 -00050

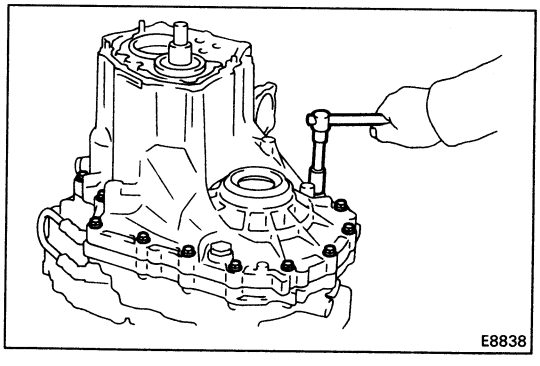

18. REMOVE SHIM

19. REMOVE TRANSMISSION CASE

Remove the seventeen bolts and tap off the case with a plastic hammer.

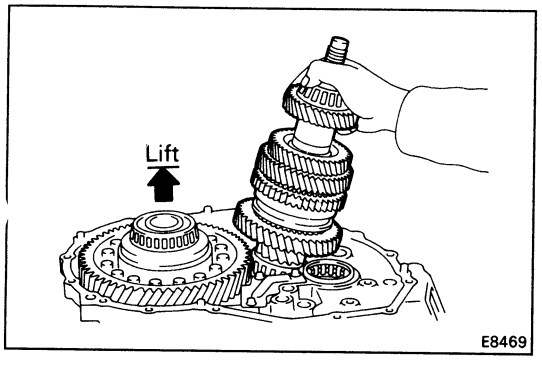

20. REMOVE OUTPUT SHAFT ASSEMBLY

21. REMOVE DIFFERENTIAL CASE ASSEMBLY

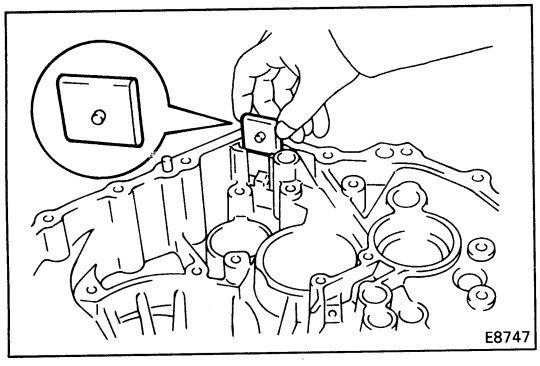

INSTALLATION OF COMPONENT PARTS

(See pages MT-57 to 59)

HINT: Coat all of the sliding and rotating surface with gear oil before assembly.

1. INSTALL MAGNET TO TRANSAXLE CASE

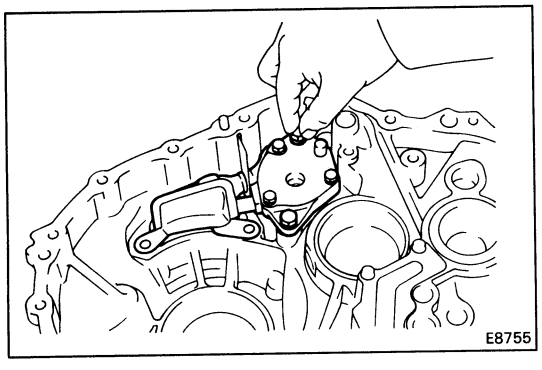

2. INSTAL OIL PUMP ASSEMBLY AND OIL PIPE

(a) Install the oil pump assembly.

(b) Install the two bolts.

HINT: Be careful not to drop the oil pump gasket.

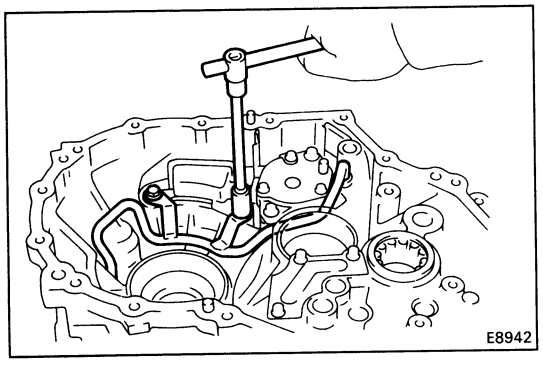

(c) Install the oil pipe and two bolts.

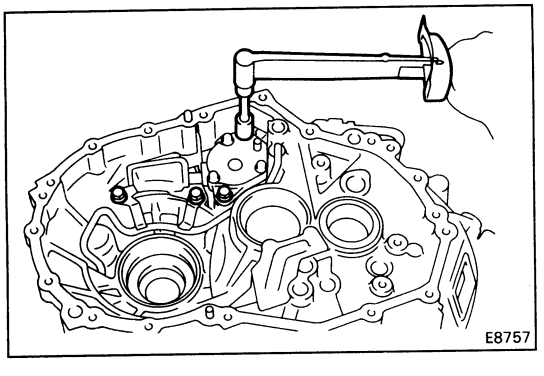

(d) Torque the four bolts.

Torque: 175kg-cm (13 ft-lb, 17 N·m)

3. ADJUST OUTPUT SHAFT PRELOAD

(a) Install the output shaft assembly.

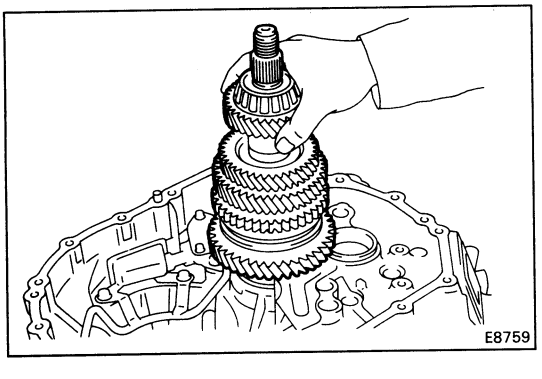

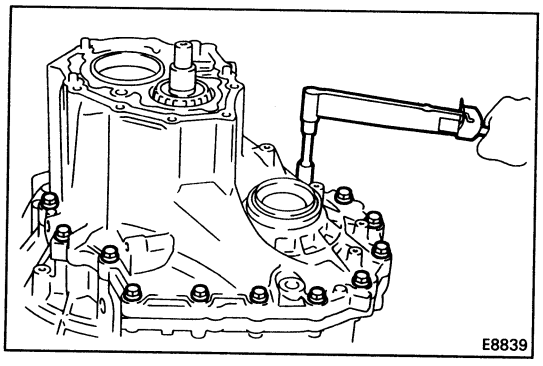

(b) Install the transmission case.

HINT: If necessary, tap on the case with a plastic hammer.

(c) Install and torque the seventeen bolts.

Torque: 300 kg-cm (22 ft-lb, 29 N·m)

(d) Install the output shaft rear taper roller bearing outer race.

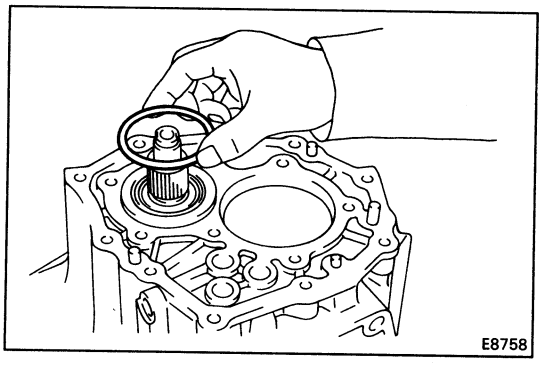

(e) Install the adjust shim.

HINT: When re-using the output shaft bearing, first install a shim of the same thickness as before. If installing a new tapered roller bearing, first select and install a shim of lesser thickness than before.

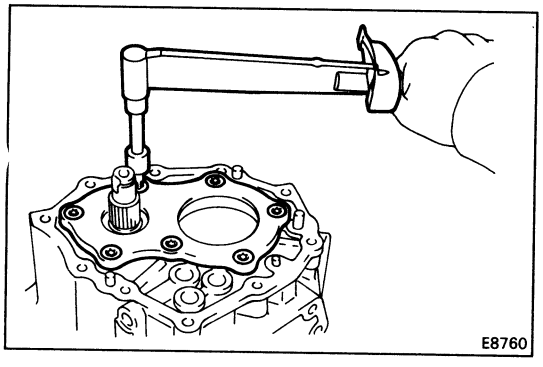

(f) Install the bearing retainer.

(g) Using a torx wrench, install and torque the seven bolts.

Torx wrench T45 09042-00050

Torque: 430kg-cm (31 ft-lb, 42 N·m)

(h) Install the new lock nut to the output shaft.

(i) Turn the output shaft right and left two or three times to allow the bearings to settle.

(j) Using a torque wrench, measure the preload.

Preload (at starting):

New bearing	**8 – 16 kg-cm (6.9 – 13.9 in.-lb, 0.8 – 1.6 N·m)**
Reused bearing	**5 – 10 kg-cm (4.3 – 8.7 in.-lb, 0.1 – 0.2 N·m)**

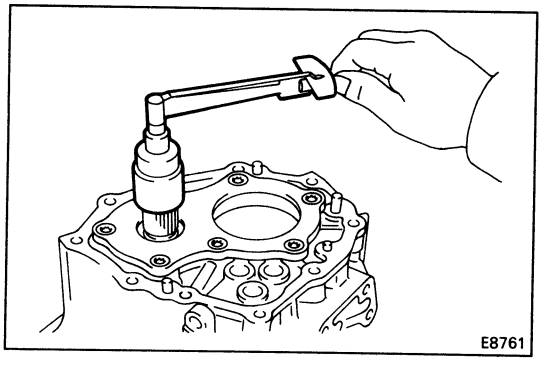

If the preload is not within specification, select the thrust washers.

HINT: The preload will change about 4 – 5 kg-cm (3.5 – 4.3 in.-lb, 0.4 – 0.5 N·m) with each shim thickness.

Mark	Thickness mm (in.)	Mark	Thickness mm (in.)	Mark	Thickness mm (in.)	Mark	Thickness mm (in.)
0	1.30 (0.0512)	7	1.65 (0.0650)	E	2.00 (0.0787)	M	2.35 (0.0925)
1	1.35 (0.0513)	8	1.70 (0.0669)	F	2.05 (0.0807)	N	2.40 (0.0945)
2	1.40 (0.0551)	9	1.75 (0.0689)	G	2.10 (0.0827)	P	2.45 (0.0965)
3	1.45 (0.0571)	A	1.80 (0.0709)	H	2.15 (0.0846)	Q	2.50 (0.0984)
4	1.50 (0.0591)	B	1.85 (0.0728)	J	2.20 (0.0866)		
5	1.55 (0.0610)	C	1.90 (0.0748)	K	2.25 (0.0886)		
6	1.60 (0.0630)	D	1.95 (0.0768)	L	2.30 (0.0906)		

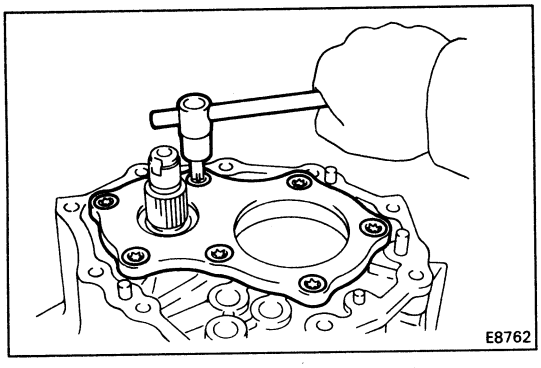

(k) Remove the lock nut.

(i) Using a torx wrench, remove the seven torx screws and rear bearing retainer.

Torx wrench T45 09042-00050

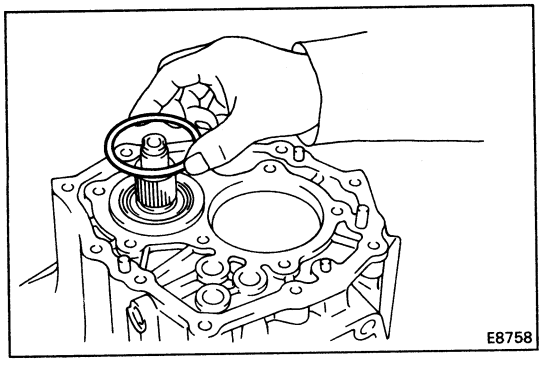

(m) Remove the shim.

(n) Remove the seventeen bolts and transmission case.

(o) Remove the output shaft assembly.

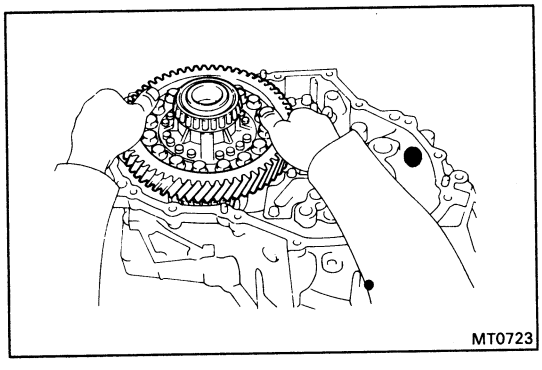

4. INSTALL DIFFERENTIAL CASE ASSEMBLY

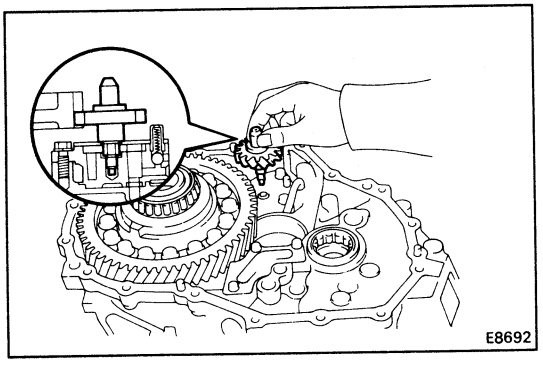

5. INSTALL OIL PUMP DRIVE GEAR

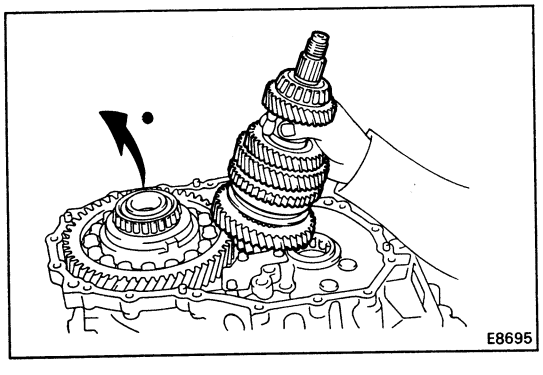

6. INSTALL OUTPUT SHAFT ASSEMBLY

(a) Lift up the differential case, install the input shaft assembly.

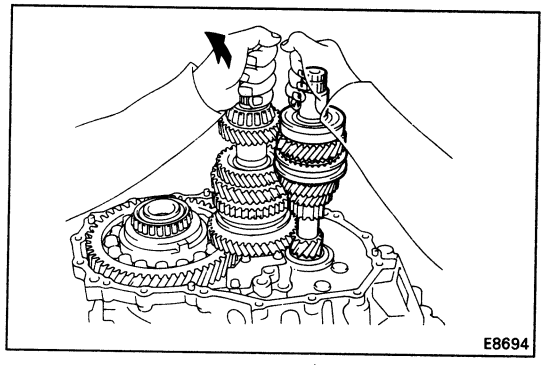

(b) Leaning the output shaft to the differential side, install the input shaft assembly.

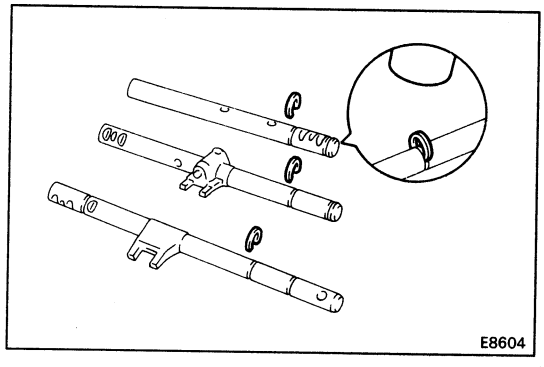

7. INSTALL SNAP RINGS

(a) Using a plastic hammer, install the snap rings to the No. 1, No. 2 and No. 3 shift fork shafts.

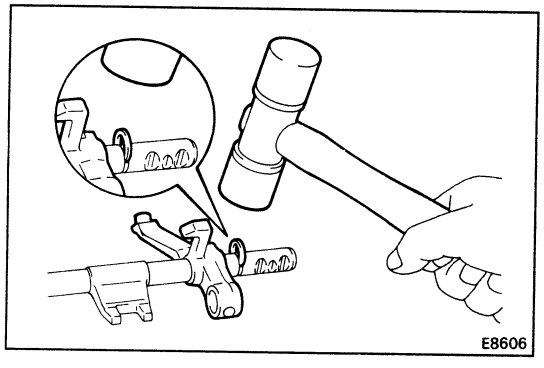

(b) Using a plastic hammer, install the reverse shift fork and snap ring to the No. 3 shift fork shaft.

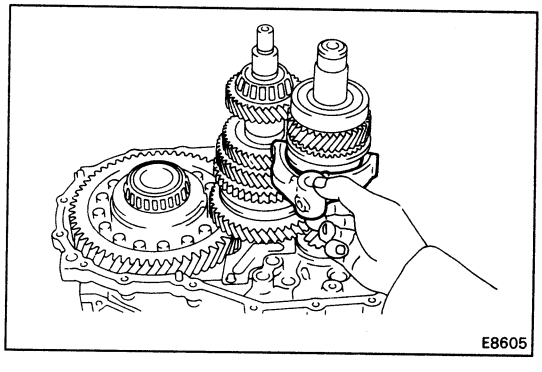

8. INSTALL NO. 2 SHIFT FORK AND NO. 3 SHIFT FORK SHAFT WITH REVERSE SHIFT FORK

(a) Install the No. 2 shift fork to the No. 2 hub sleeve.

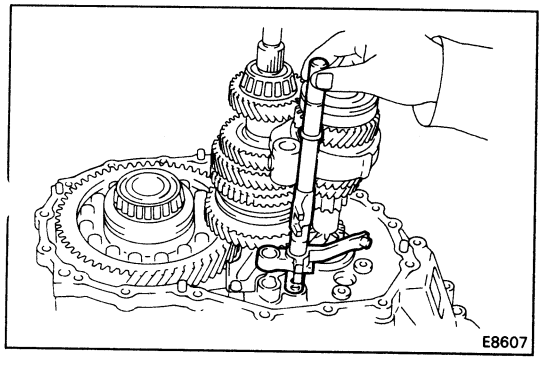

(b) Install the No. 3 shift fork shaft with reverse shift fork.

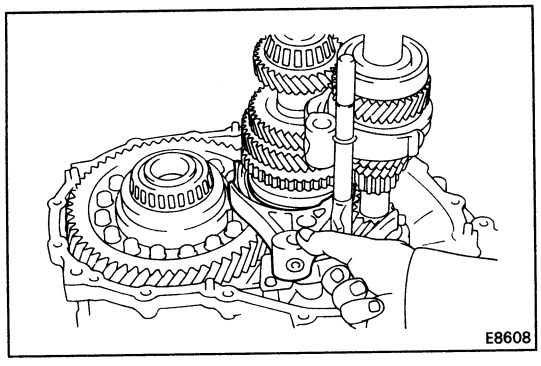

9. INSTALL NO. 1 SHIFT FORK, SHIFT HEAD AND NO. 2 SHIFT FORK SHAFT

(a) Install the No. 1 shift fork to the No. 1 hub sleeve.

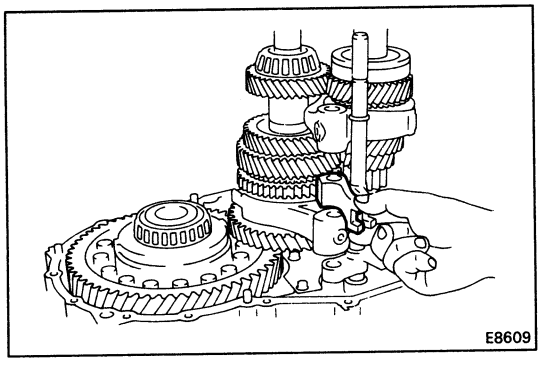

(b) Put shift head onto the No. 1 shift fork.

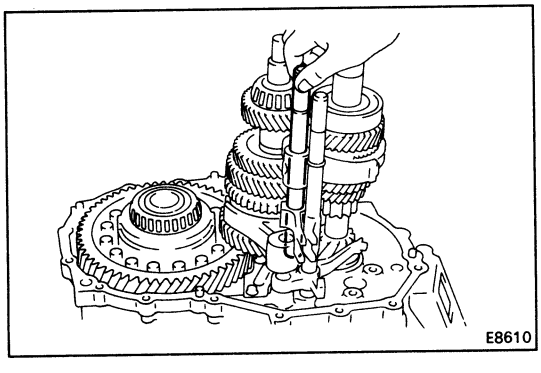

(c) Install the No. 2 shift fork shaft to the transaxle case, through the shift head and No. 1 shift fork.

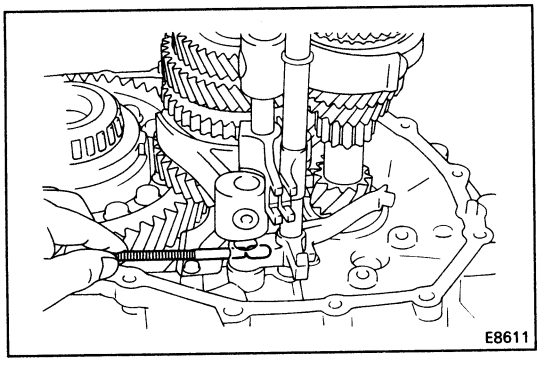

10. INSTALL INTERLOCK ROLLER

Using a magnetic finger, install the interlock roller to the reverse shift fork.

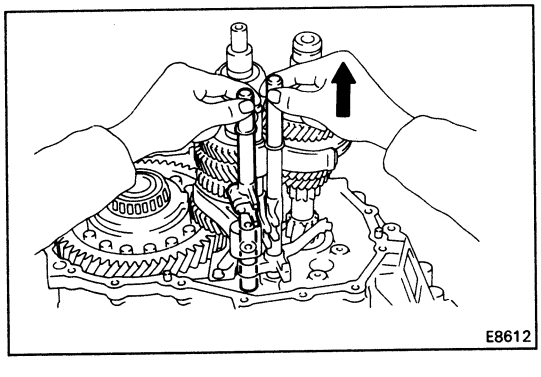

11. INSTALL NO. 1 SHIFT FORK SHAFT

Install the No. 1 shift fork shaft to the case, through the No. 1 shift fork and reverse shift fork.

HINT: When it is difficult to install the fork shaft through the reverse shift fork, pull up the No. 3 shift fork shaft.

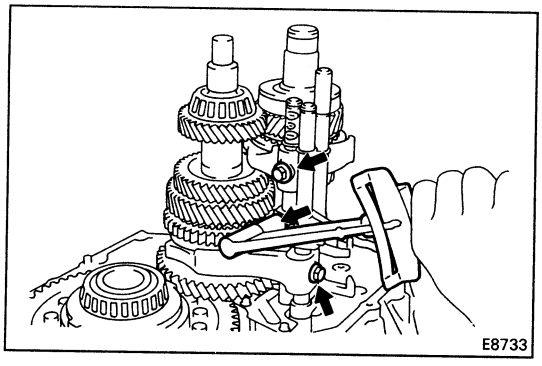

12. INSTALL SET BOLTS

Install and torque the three set bolts.

Torque: 240 kg-cm (17 ft-lb, 24 N·m)

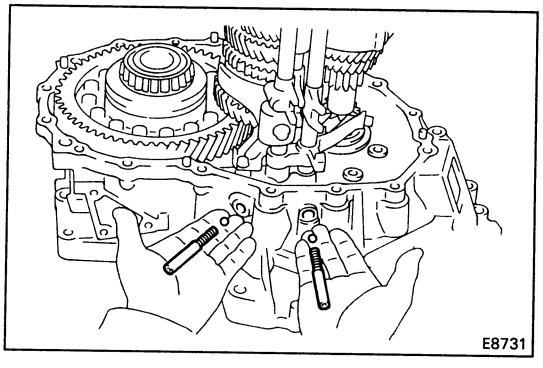

13. INSTALL LOCKING BALLS, SPRINGS, SEATS AND PLUGS

(a) Install the two locking balls, springs and seats.

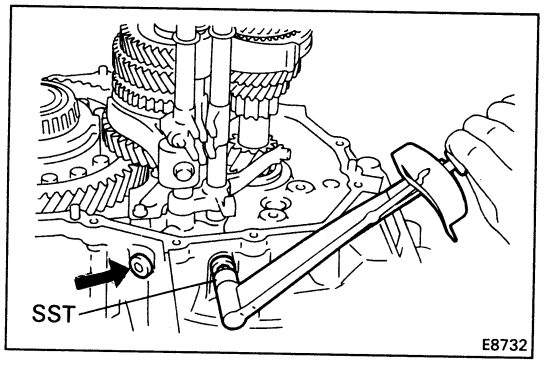

(b) Apply liquid sealant to the two plugs.

Sealant: Part No. 08833-00080, THREE BOND 1344, LOCTITE 242 or equivalent

(c) Using SST, install and torque two plugs.

SST 09313-30021

Torque: 250 kg-cm (18 ft-lb, 25 N·m)

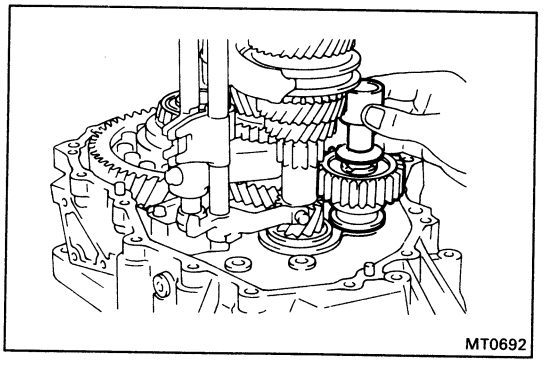

14. INSTALL REVERSE IDLER GEAR AND SHAFT

Install the reverse idler gear and shaft as shown.

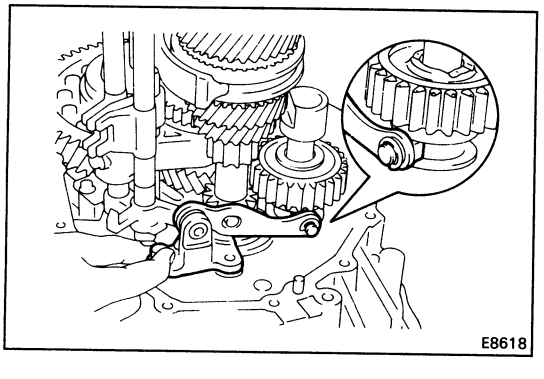

15. INSTALL REVERSE SHIFT ARM BRACKET AND NO. 2 OIL PIPE

(a) Put the reverse shift fork pivot into the reverse shift arm and install the reverse shift arm bracket to the transaxle case.

(b) Install the bolt.

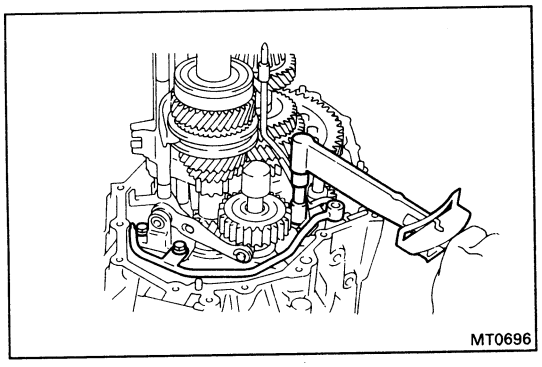
MT0696

(c) Install the No. 2 oil pipe and two bolts.

(d) Torque the reverse shift arm bracket and oil pipe bolts.

Torque: 175 kg-cm (13 ft-lb, 17 N·m)

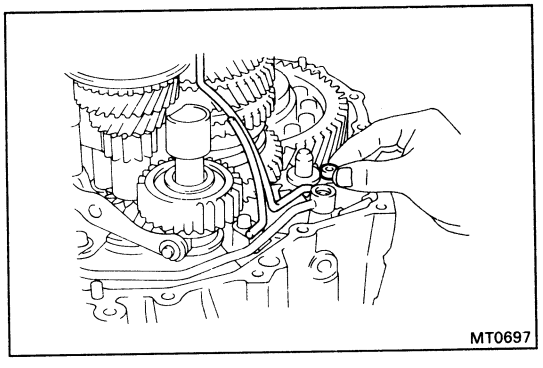
MT0697

(e) Install the new gasket to the No. 2 oil pipe.

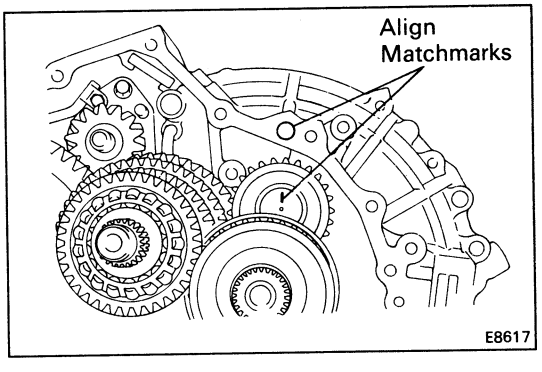

E8617

16. ALIGN MATCHMARKS

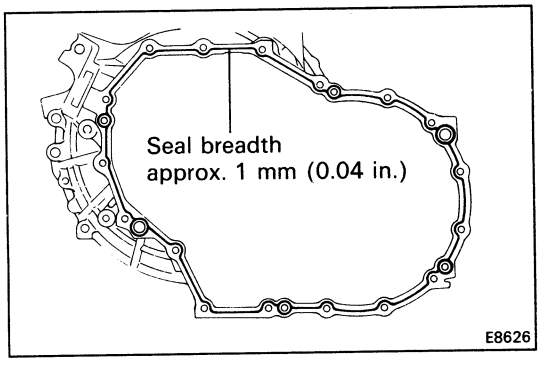

E8626

17. INSTALL TRANSMISSION CASE

(a) Remove any packing material and be careful not to drop oil on the contacting surfaces of the transmission case or transaxle case.

(b) Apply seal packing to the transmission case as shown in the figure.

Seal packing: Part No. 08826-00090, THREE BOND 1281 or equivalent

HINT: Install the transmission case as shown as the seal packing is applied.

(c) Install and torque the seventeen bolts.

Torque: 300 kg-cm (22 ft-lb, 29 N·m)

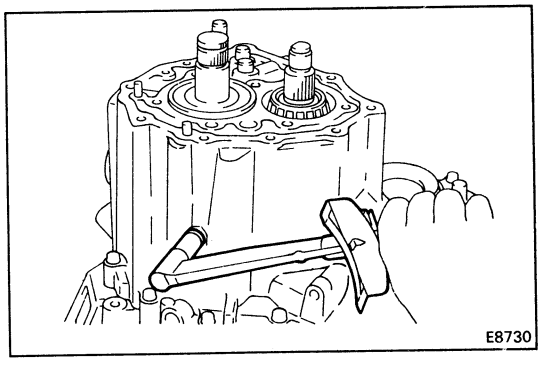
E8730

18. INSTALL AND TORQUE REVERS IDLER GEAR SHAFT RETAINING BOLT

Torque: 300 kg-cm (22 ft-lb, 29 N·m)

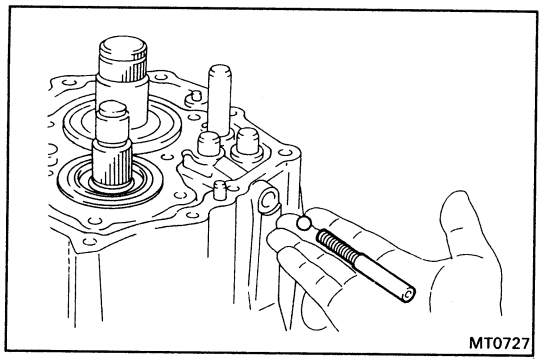

19. INSTALL LOCKING BALL, SPRING, SEAT AND PLUG

(a) Install the locking ball, spring and seat.

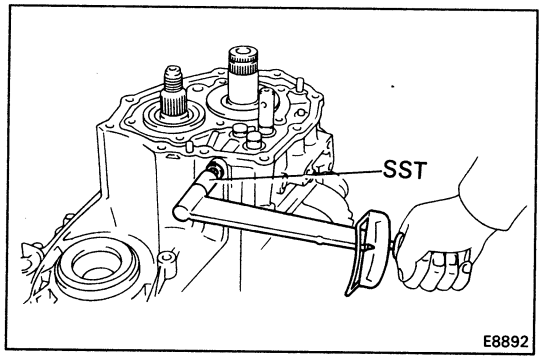

(b) Apply liquid sealant to the plug.

Sealant: Part No. 08833-00080, THREE BOND 1344, LOCTITE 242 or equivalent

(c) Using SST, install and torque the plug.

SST 09313-30021

Torque: 250 kg-cm (18 ft-lb, 25 N·m)

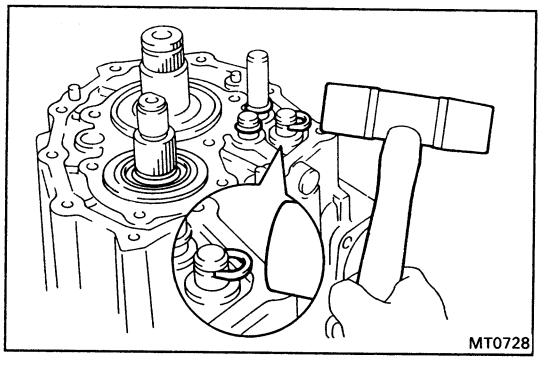

20. INSTALL SNAP RINGS

Using a plastic hammer, install the three snap rings.

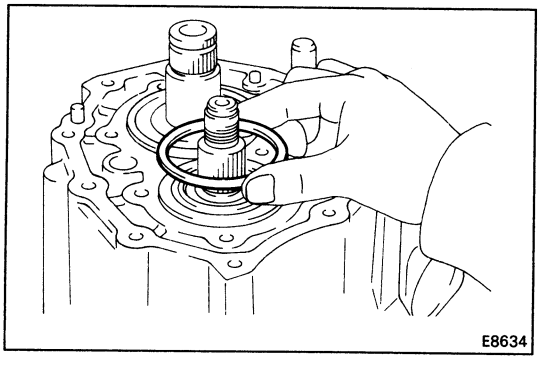

21. INSTALL SHIM

HINT: Install the previously selected shim.
(See page MT-105)

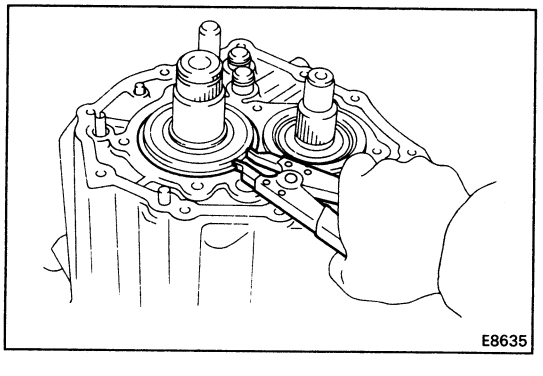

22. INSTALL SNAP RING

Using a snap ring pliers, install the snap ring to the input shaft rear bearing.

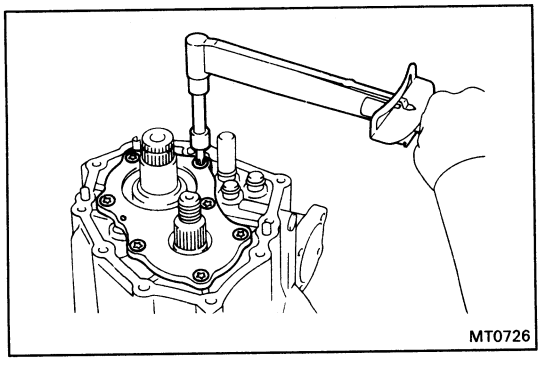
MT0726

23. INSTALL REAR BEARING RETAINER

(a) Clean the threads of the torx screws.

(b) Apply liquid sealant to the screw threads.

Sealant: Part No. 08833-00070, THREE BOND 1324, LOCTITE 242 or equivalent

(c) Using a torx wrench, install and torque the seven torx screws.

Torx wrench T45 09042-00050

Torque: 430 kg-cm (31 ft-lb, 42 N·m)

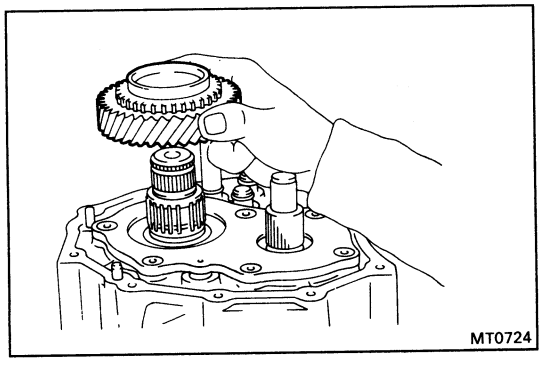
MT0724

24. INSTALL SPACER, NEEDLE ROLLER BEARING AND FIFTH GEAR

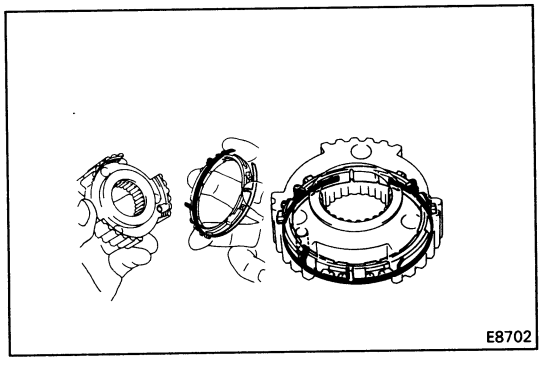
E8702

25. INSTALL SYNCHRONIZER RING WITH KEY SPRING TO NO. 3 CLUTCH HUB

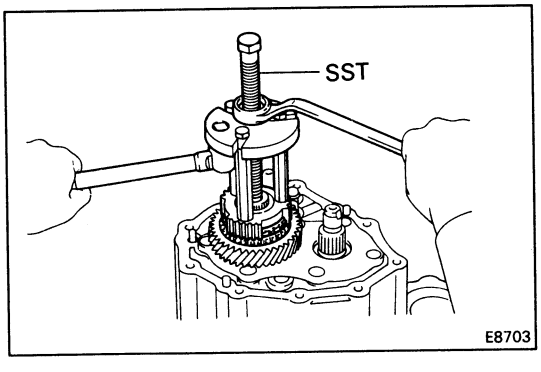

E8703

26. INSTALL NO. 3 CLUTCH HUB

Using SST, install the No. 3 clutch hub with synchronizer ring and key spring.

SST 09310-17010 (09310-07010, 09310-07020, 09310-07030)

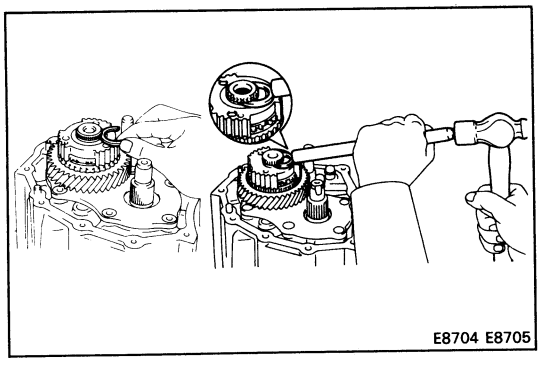
E8704 E8705

27. INSTALL SNAP RING

Select a snap ring that will allow minimum axial play and install it on the shaft.

Mark	Thickness mm (in.)	Mark	Thickness mm (in.)
Q	2.25 (0.0886)	V	2.50 (0.0984)
R	2.30 (0.0906)	W	2.55 (0.1004)
S	2.35 (0.0925)	X	2.60 (0.1024)
T	2.40 (0.0945)	Y	2.65 (0.1043)
U	2.45 (0.0965)		

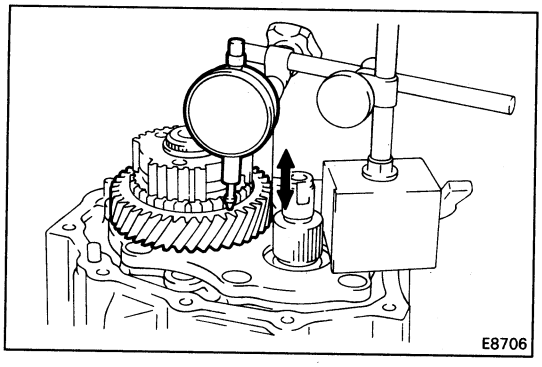

28. MEASURE FIFTH GEAR THRUST CLEARANCE

Using a dial indicator measure the 5th gear thrust clearance.

Standard clearance: 0.10 – 0.57 mm (0.0039 – 0.0224 in.)

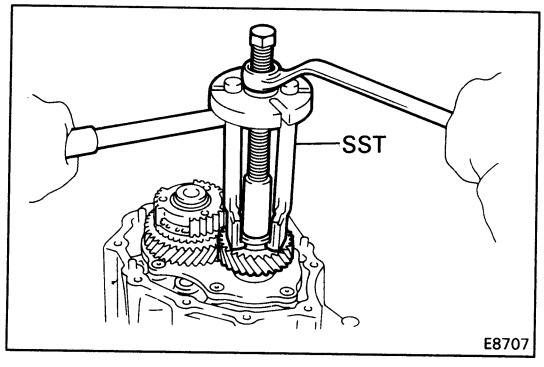

29. INSTALL FIFTH DRIVEN GEAR

Using SST, install the 5th driven gear.

SST 09310-17010 (09310-07010, 09310-07020, 09310-07040, 09310-07050)

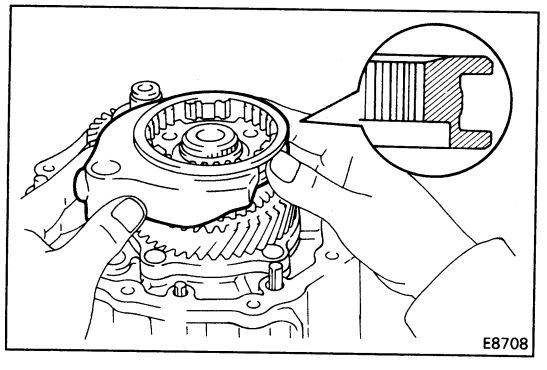

30. INSTALL NO. 3 HUB SLEEVE WITH NO. 3 SHIFT FORK

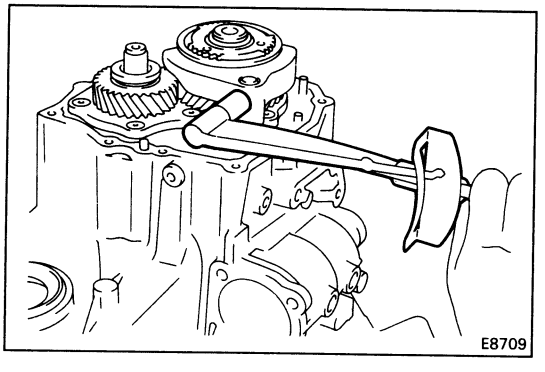

31. INSTALL SET BOLT

Install and torque the set bolt.

Torque: 240 kg-cm (17 ft-lb, 24 N·m)

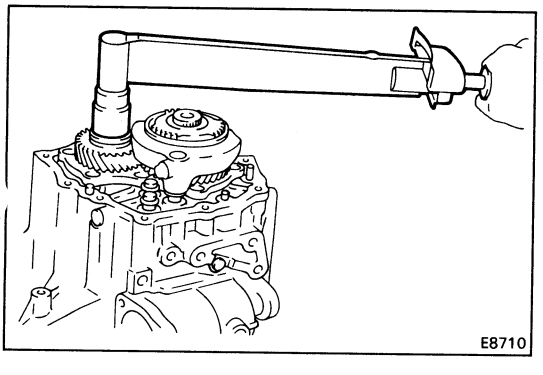

32. INSTALL LOCK NUT

(a) Engage the gear double meshing.

(b) Install and torque the lock nut.

Torque: 1,250 kg-cm (90 ft-lb, 123 N·m)

(c) Disengage the gear double meshing.

(d) Stake the lock nut.

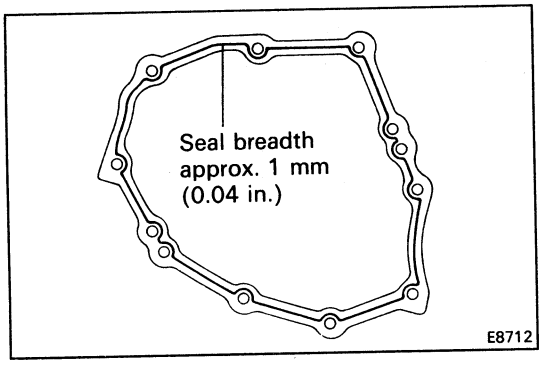

33. INSTALL TRANSMISSION CASE COVER

(a) Remove any packing material and be careful not to drop oil on the contacting surfaces of the transmission case cover.

(b) Apply seal packing to the transmission case as shown in the figure.

Seal packing: Part No. 08826-00090, THREE BOND 1281 or equivalent

HINT: Install the transmission case cover as soon as the seal packing is applied.

(c) Install and torque the ten bolts.

Torque: 300 kg-cm (22 ft-lb, 29 N·m)

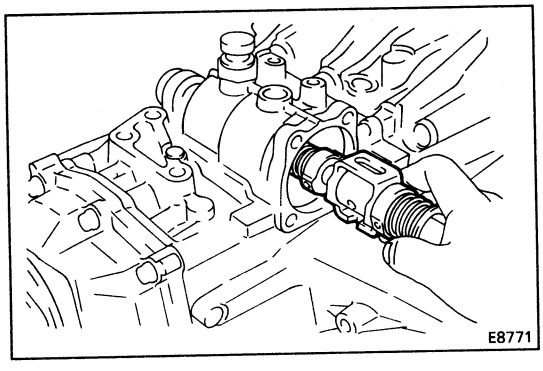

34. INSTALL SHIFT AND SELECT LEVER SHAFT ASSEMBLY

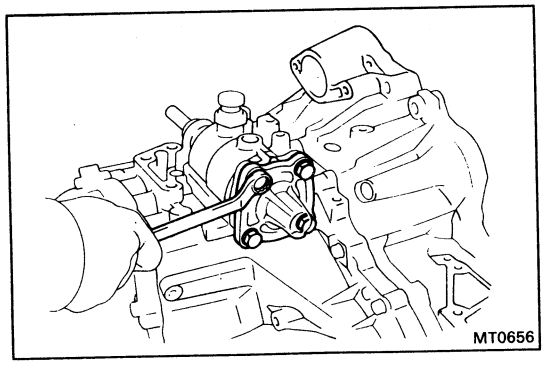

35. INSTALL CONTROL SHAFT COVER

(a) Place a new gasket in position on the control shaft cover.

(b) Install the control shaft cover.

(c) Apply liquid sealant to the bolt threads.

Sealant: Part No. 08833-00080, THREE BOND 1344, LOCTITE 242 or equivalent

(d) Install and torque the bolts.

Torque: 200 kg-cm (14 ft-lb, 20 N·m)

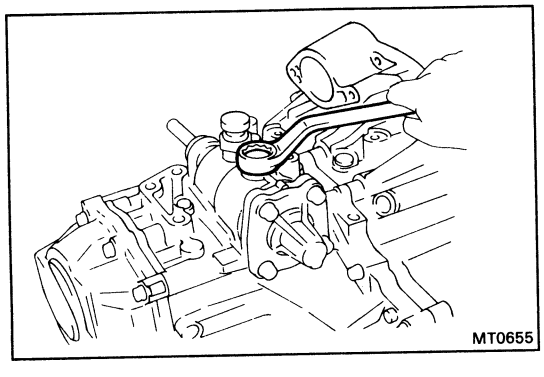

36. INSTALL AND TORQUE LOCK BOLT

Torque: 500 kg-cm (36 ft-lb, 49 N·m)

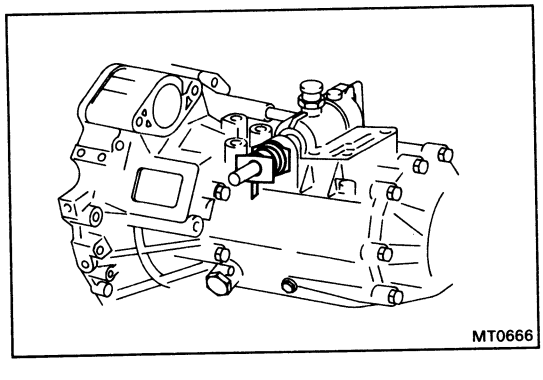

37. INSTALL SHIFT LEVER

(a) Install the boot to the control shaft oil seal.

HINT: Make sure to install the boot in the correct direction. Position the air bleed of the boot downward.

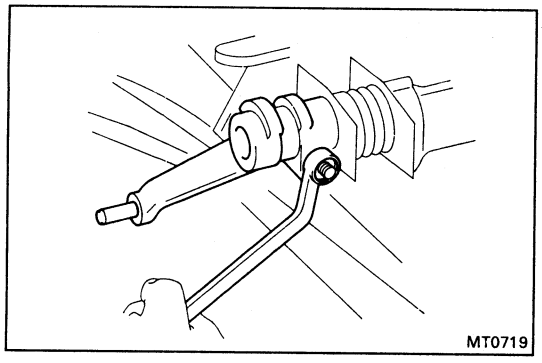

(b) Fit the pin's groove into the shaft's notch and tap on with a hammer.

(c) Install and torque the nut.

Torque: 120 kg-cm (9 ft-lb, 12 N·m)

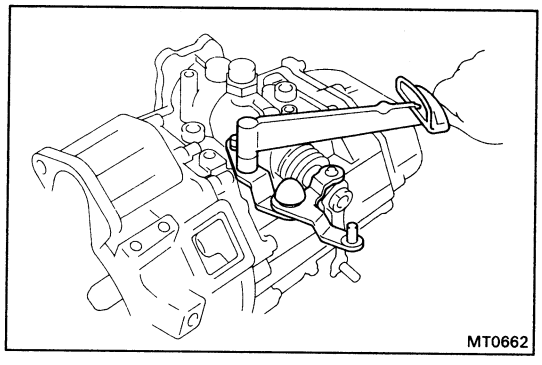

38. INSTALL AND TORQUE SELECTING BELLCRANK ASSEMBLY

Torque: 200 kg-cm (14 ft-lb, 20 N·m)

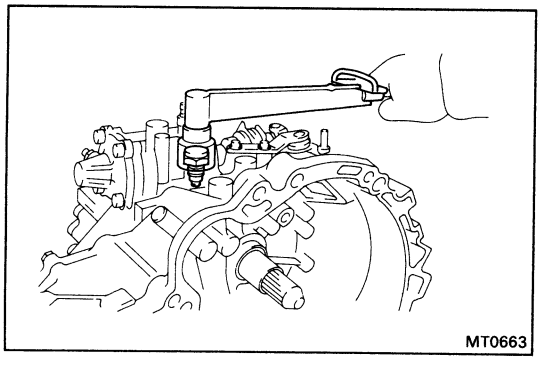

39. INSTALL BACK-UP LIGHT SWITCH WITH GASKET

Torque: 410 kg-cm (30 ft-lb, 40 N·m)

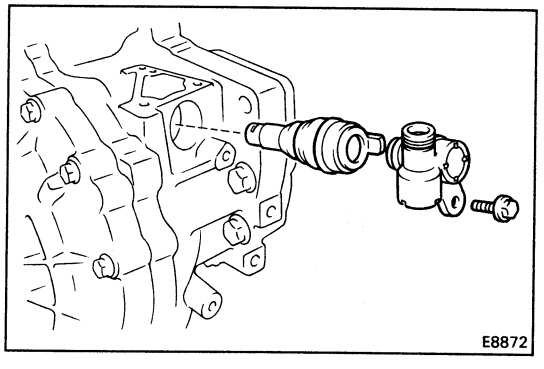

40. INSTALL SPEEDOMETER DRIVEN GEAR

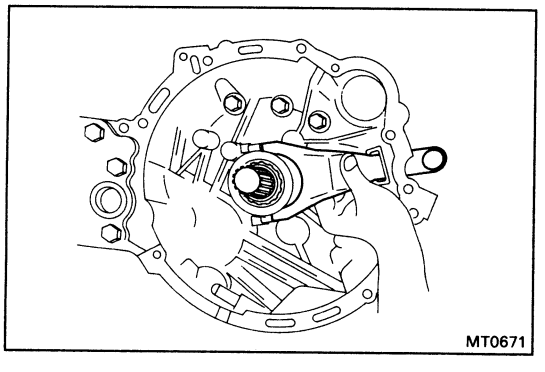

41. INSTALL RELEASE FORK AND BEARING

Apply molybdenum disulphide lithium base grease to the following parts:

- Input shaft spline
- Release fork contact surface

SHIFT LEVER AND CONTROL CABLE

COMPONENTS

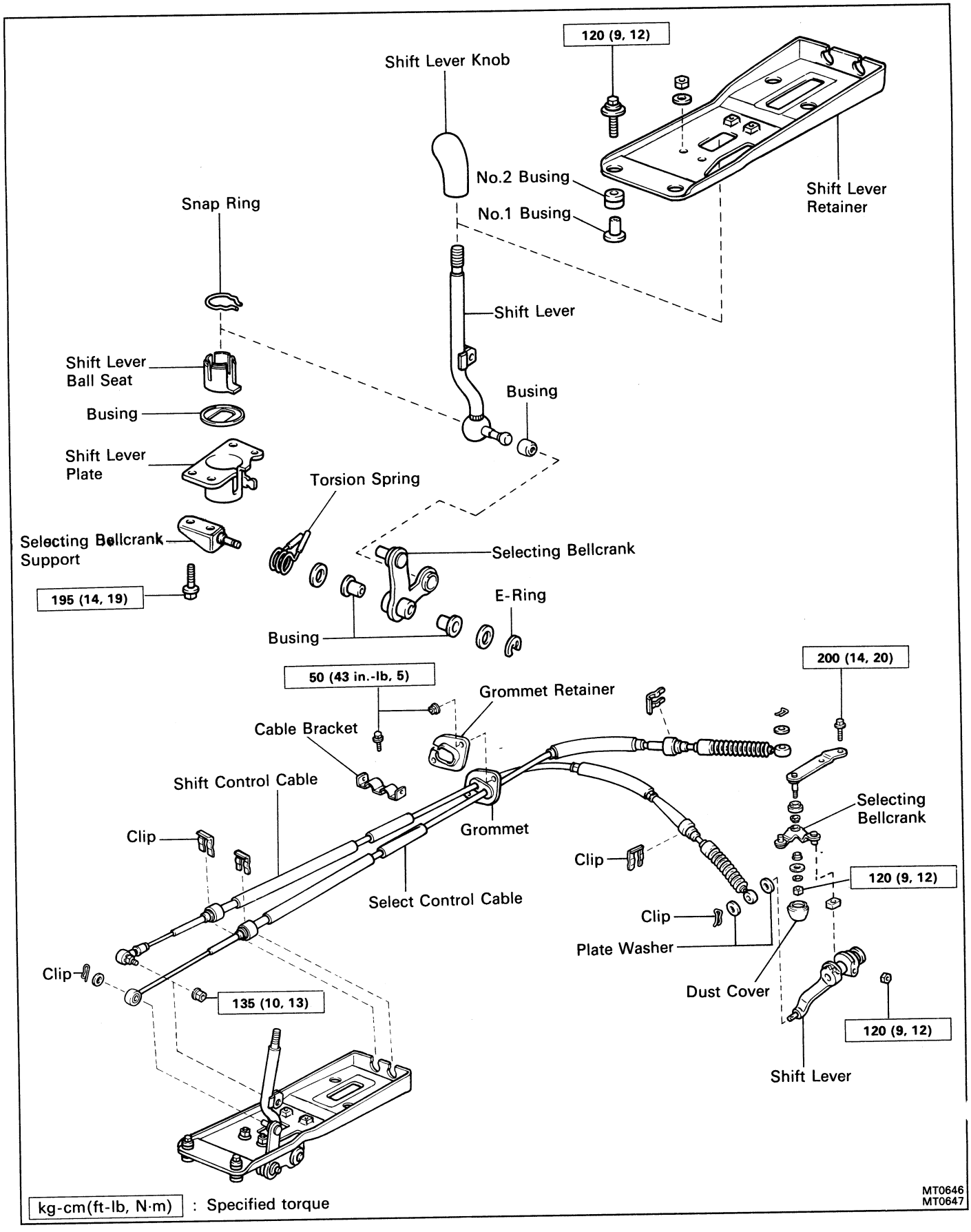

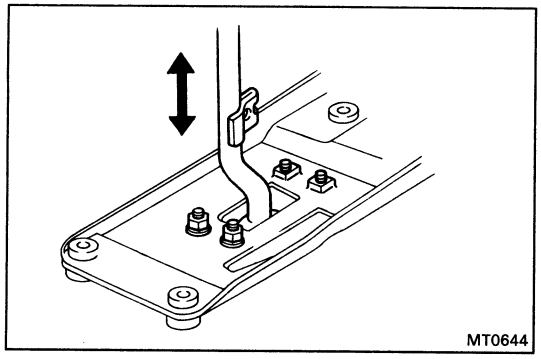

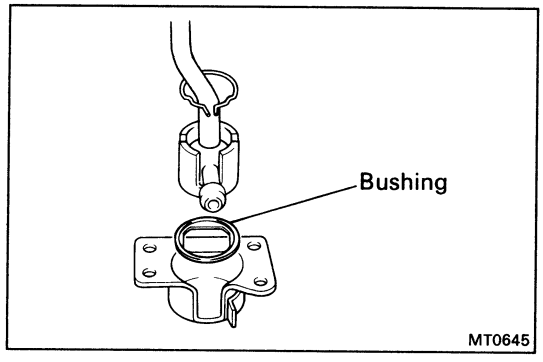

INSPECTION OF SHIFT LEVER

INSPECT SHIFT LEVER PLAY

Check that there is no vertical play in the shift lever.

If there is any play, replace bushing.

A241E AUTOMATIC TRANSAXLE

	Page
DESCRIPTION	AT-2
OPERATION	AT-4
TROUBLESHOOTING	
Basic Troubleshooting	AT-9
General Troubleshooting	AT-10
Preliminary Check	AT-12
Diagnosis System	AT-14
Electronic Control System	AT-20
Mechanical System Tests	AT-31
Road Test	AT-35
Automatic Shift Schedule	AT-38
ON-VEHICLE REPAIR	AT-39
REMOVAL AND INSTALLATION OF TRANSAXLE	AT-41
TORQUE CONVERTER	AT-43
REMOVAL OF COMPONENT PARTS	AT-44
COMPONENT PARTS	
General Notes	AT-70
Second Coast Brake	AT-71
Oil Pump	AT-74
Direct Clutch	AT-78
Forward Clutch	AT-82
Front Planetary Gear	AT-87
Second Brake	AT-90
Rear Planetary Gear	AT-92
First and Reverse Brake	AT-95
Intermediate Shaft	AT-96
Counter Shaft	AT-98
Underdrive Clutch and One-Way Clutch No. 3	AT-106
Underdrive Brake and B_4 Accumulator Piston	AT-111
Valve Body	AT-112
Differential	AT-124
INSTALLATION OF COMPONENT PARTS	AT-133
SHIFT LOCK SYSTEM	AT-163

AT

DESCRIPTION

General

The A241E automatic transaxle is a 4-speed Electronically Controlled Transaxle (hereafter called ECT) with a lock-up mechanism developed exclusively for the new MR2.

The A241E automatic transaxle is already in use in the Celica (ST184 series.)

This automatic transaxle has the following features.

- ▶ The "Super-Flow" torque converter is used to improve the transmission efficiency.
- ▶ When shifting the transmission, the engine torque is controlled and the clutch hydraulic pressure in the transmission is electronically controlled to reduce transmission shift shock.
- ▶ Transaxle control ECU has been integrated with the Engine ECU.

This automatic transaxle are mainly composed of the torque converter with lock-up clutch, 4-speed planetary gear unit, the hydraulic control system and the electronic control system.

To minimize the possibility of incorrect operation of the automatic transaxle, a shift lock mechanism has also been added.

Sectional View

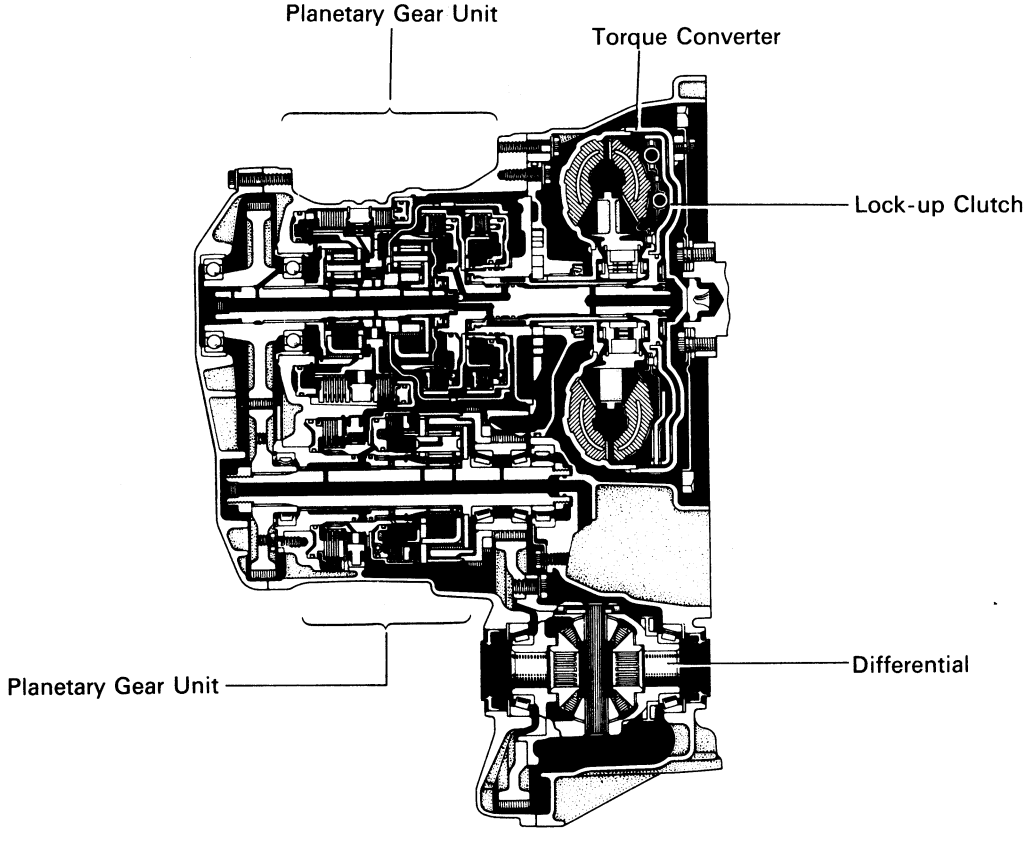

A241E

AT5715

General Specifications

Type of Transaxle			A241E
Type of Engine			5S-FE
Torque Converter	Stall Torque Ratio		2.1 : 1
	Lock-Up Mechanism		Equipped
Gear Ratio	1st Gear		3.643
	2nd Gear		2.008
	3rd Gear		1.296
	O/D Gear		0.892
	Reverse Gear		2.977
Number of Discs and Plates (Disc/Plate)	C_1	Forward Clutch	4/4
	C_2	Direct Clutch	3/3
	C_3	Underdrive Clutch	3/5
	B_2	2nd Brake	3/3
	B_3	1st & Reverse Brake	6/5
	B_4	Underdrive Brake	3/3
2nd Coast Brake (B_1) Band Width mm(in.)			25 (0.98)
Number of Sprags	F_1	No. 1 One-Way Clutch	18
	F_2	No. 2 One-Way Clutch	30
	F_3	Underdrive One-Way Clutch	30
Front Planetary Gear	No. of Sun Gear Teeth		39
	No. of Pinion Gear Teeth		16
	No. of Ring Gear Teeth		71
Rear Planetary Gear	No. of Sun Gear Teeth		27
	No. of Pinion Gear Teeth		18
	No. of Ring Gear Teeth		62
Underdrive Planetary Gear	No. of Sun Gear Teeth		33
	No. of Pinion Gear Teeth		20
	No. of Ring Gear Teeth		73
ATF	Type		ATF DEXRON® II
	Capacity liter (US qts, Imp. qts)	Total	8.0 (8.5, 7.0)
		Drain & Refill	3.3 (3.5, 2.9)

OPERATION

Mechanical Operation

OPERATING CONDITIONS

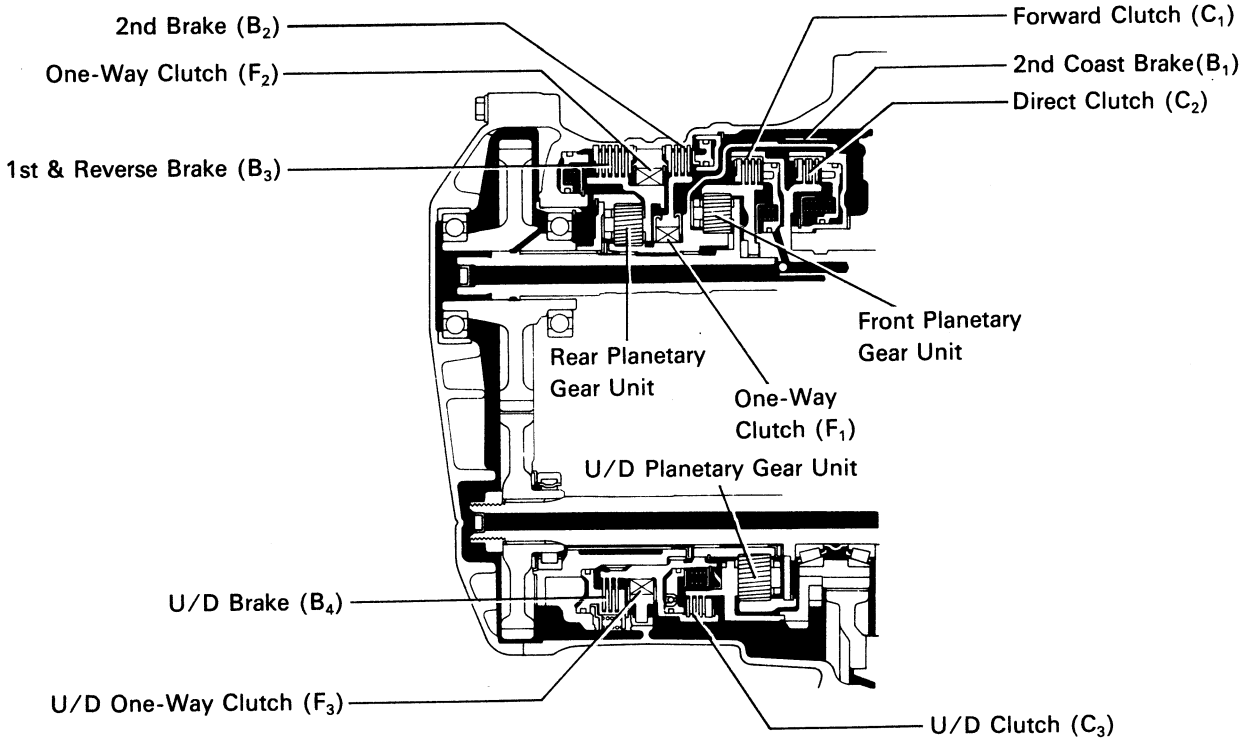

B5342

Range (i.e, Shift Lever Position)	Gear	No.1 Solenoid Valve	No.2 Solenoid Valve	C_1	C_2	C_3	B_1	B_2	B_3	B_4	F_1	F_2	F_3
P	Park	ON	OFF							●			
R	Reverse	ON	OFF		●				●	●			
N	Neutral	ON	OFF							●			
D	1st	ON	OFF	●						●		●	●
	2nd	ON	ON	●				●		●	●		●
	3rd	OFF	ON	●	●			●		●			●
	O/D	OFF	OFF	●	●	●		●					
2	1st	ON	OFF	●						●		●	●
	2nd	ON	ON	●			●	●		●	●		●
	3rd*1	OFF	ON	●	●			●		●			●
L	1st	ON	OFF	●					●	●		●	●
	2nd*1	ON	ON	●			●	●		●	●		●

●: Operating
*1 : Down-shift only in the 3rd gear for the 2 range and 2nd gear for the L range – no up-shift

FUNCTION OF COMPONENTS

Component		Function
C_1	Forward Clutch	Connects input shaft and front planetary ring gear.
C_2	Direct Clutch	Connects input shaft and front & rear planetary sun gear.
C_3	U/D Clutch	Connects underdrive sun gear and underdrive planetary carrier.
B_1	2nd Coast Brake	Prevents front & rear planetary sun gear from turning either clockwise or counterclockwise.
B_2	2nd Brake	Prevents outer race of F_1 from turning either clockwise or counterclockwise, thus preventing the front & rear planetary sun gear from turning counterclockwise.
B_3	1st & Reverse Brake	Prevents rear planetary carrier from turning either clockwise or counterclockwise.
B_4	U/D Brake	Prevents underdrive sun gear from turning either clockwise or counterclockwise.
F_1	No. 1 One-Way Clutch	When B_2 is operating, this clutch prevents the front & rear planetary gear from turning counterclockwise.
F_2	No. 2 One-Way Clutch	Prevents rear planetary carrier from turning counterclockwise.
F_3	U/D One-Way Clutch	Prevents underdrive planetary sun gear from turning clockwise.
Planetary Gears		These gears change the route through which driving force is transmitted, in accordance with the operation of each clutch and brake, in order to increase or reduce the input and output speed.

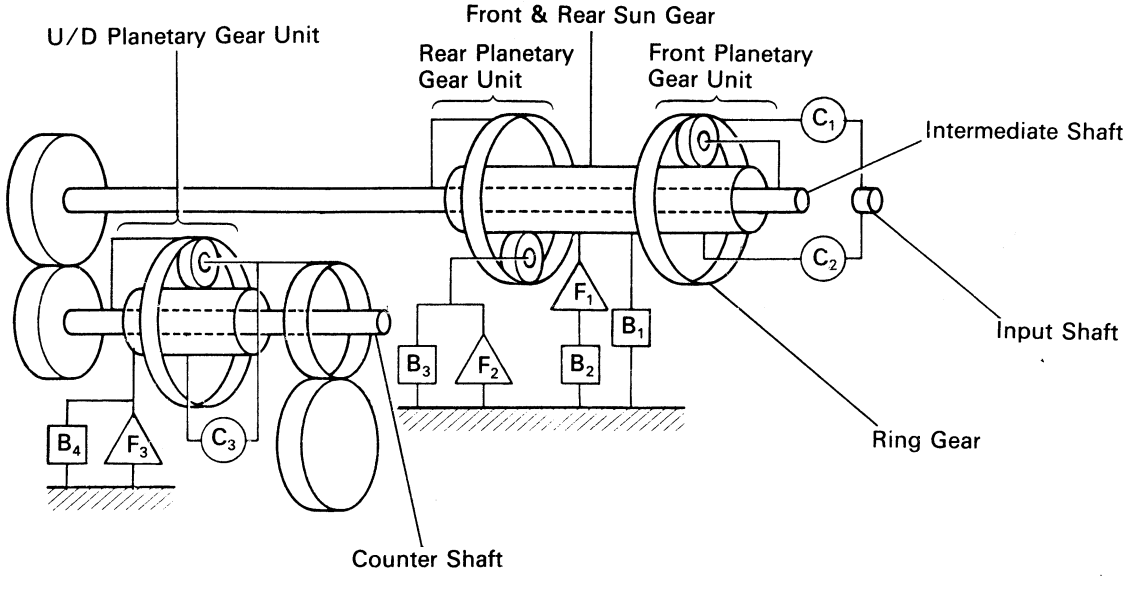

AT2690

FUNCTION OF COMPONENTS (Cont'd)

The conditions of operation for each gear position are shown on the following illustrations:

D or 2 Range 1st Gear

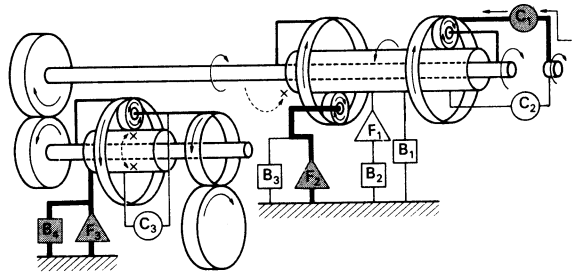

AT3216

2 Range 2nd Gear

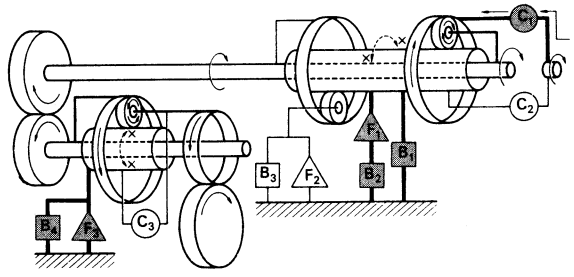

AT3220

D Range 2nd Gear

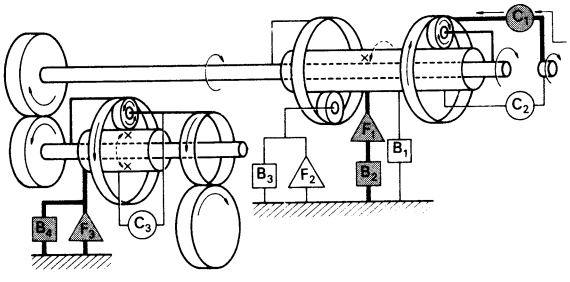

AT3217

L Range 1st Gear

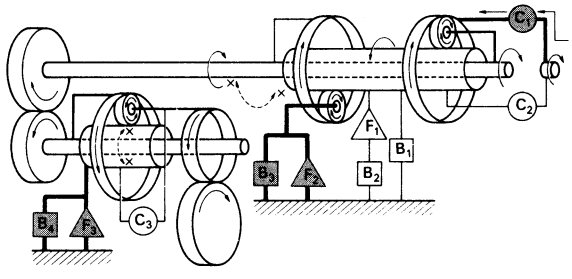

AT3221

D Range 3rd Gear

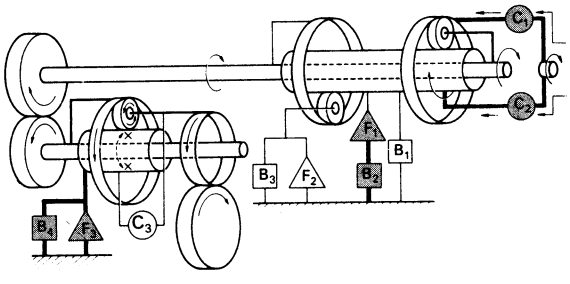

AT3218

R Range Reverse Gear

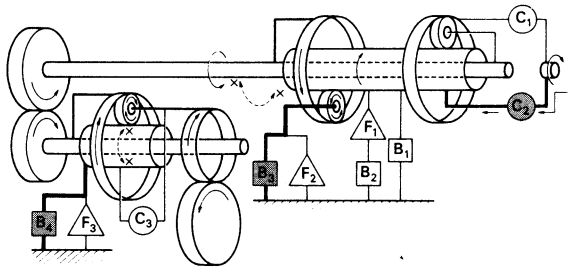

AT3222

D Range O/D

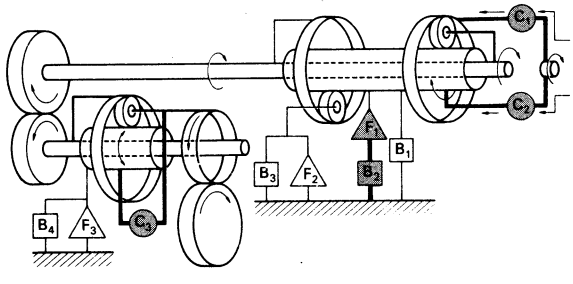

AT3219

Hydraulic Control System

The hydraulic control system is composed of the oil pump, the valve body, the solenoid valves, the accumulators, the clutches and brakes, and the governor valve as well as the fluid passages which connect all of these components.

Based on the hydraulic pressure created by the oil pump, the hydraulic control system governs the hydraulic pressure acting on the torque converter, clutches and brakes in accordance with the vehicle driving conditions.

There are three solenoid valves on the valve body.
The No. 1 and No. 2 solenoid valves are turned on and off by signals from the ECU to operate the shift valves and change the gear shift position.
The No. 3 solenoid valve is operated by signals from the ECU to engage or disengage the lock-up clutch of the torque converter.

► A241E

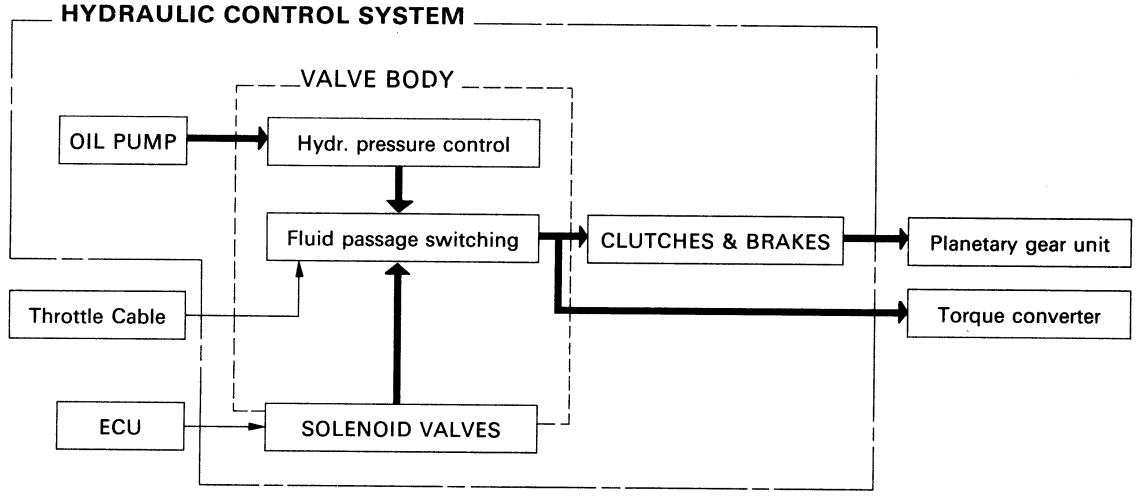

A241E Electronic Control System (See page AT-20)

GENERAL

The electronic control system for the A241E automatic transaxle provides extremely precise control of the gear shift timing and lock-up timing in response to driving conditions as sensed by various sensors located throughout the vehicle and in response to the engine's running condition.

At the same time, the ECU control reduces vehicle squat when the vehicle starts out the gear shift shock. The electronic control system is also equipped with a self diagnosis system which diagnoses malfunctions of electronically controlled components and warns the driver, and a fail-safe which makes it possible for the vehicle to continue functioning when a malfunction occurs.

CONSTRUCTION

The electronic control system can be broadly divided into three groups; the sensors, ECU and actuators.

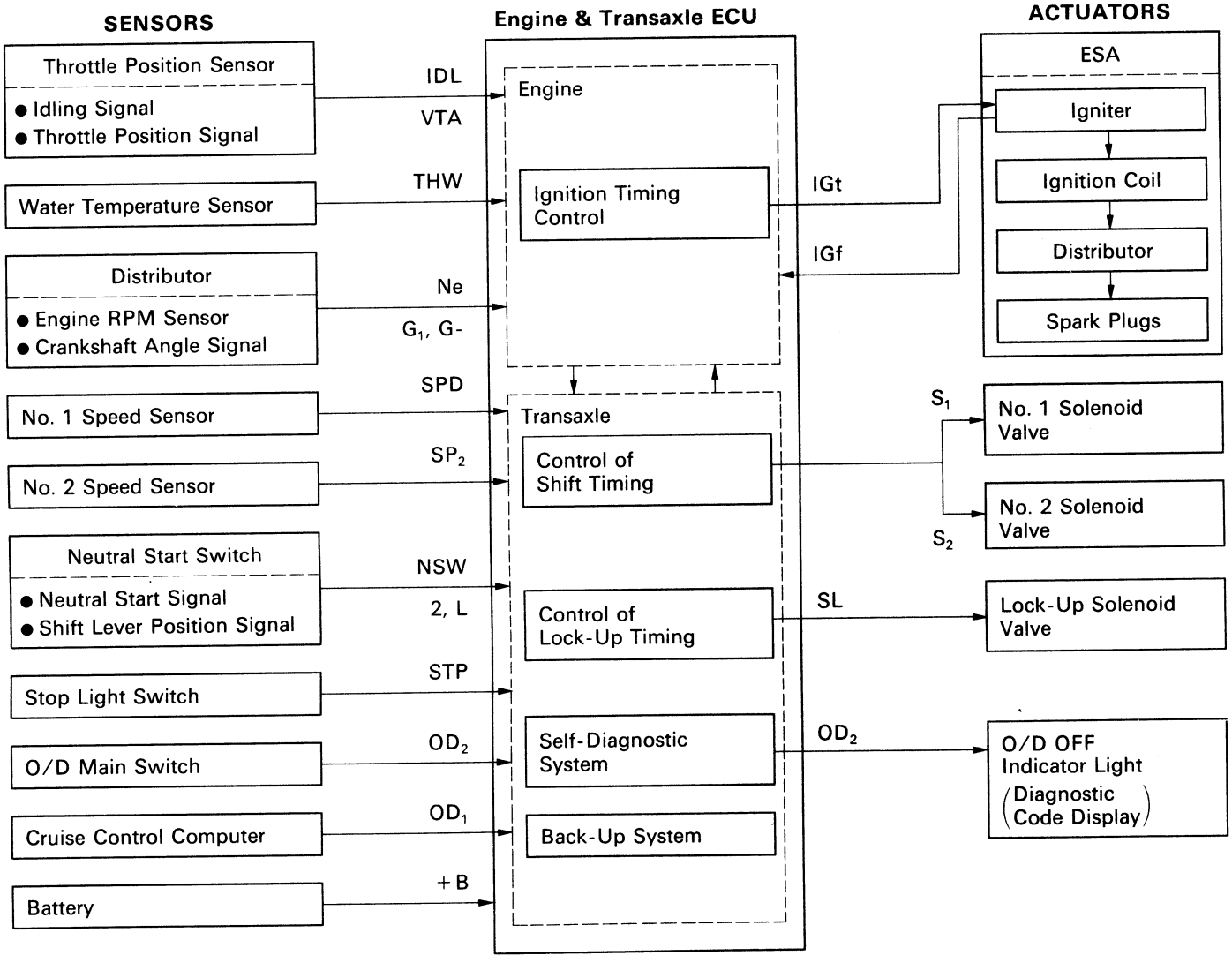

ELECTRONIC CONTROL CIRCUIT (See page AT-20)

ELECTRONIC CONTROL COMPONENTS (See page AT-21)

TROUBLESHOOTING

Trouble occurring in the ECT can stem from one of three sources: the engine, the ECT electronic control unit or the transaxle itself. Before troubleshooting, determine in which these three sources the problem lies, and begin troubleshooting with the simplist operation, gradually working up in order of difficulty.

Basic Troubleshooting

Before troubleshooting and ECT, first determine whether the problem is electrical or mechanical. To do this, just refer to the basic troubleshooting flow-chart provided below.
If the cause is already known, using the basic troubleshooting chart below along with the general troubleshooting chart on the following page should speed the procedure.

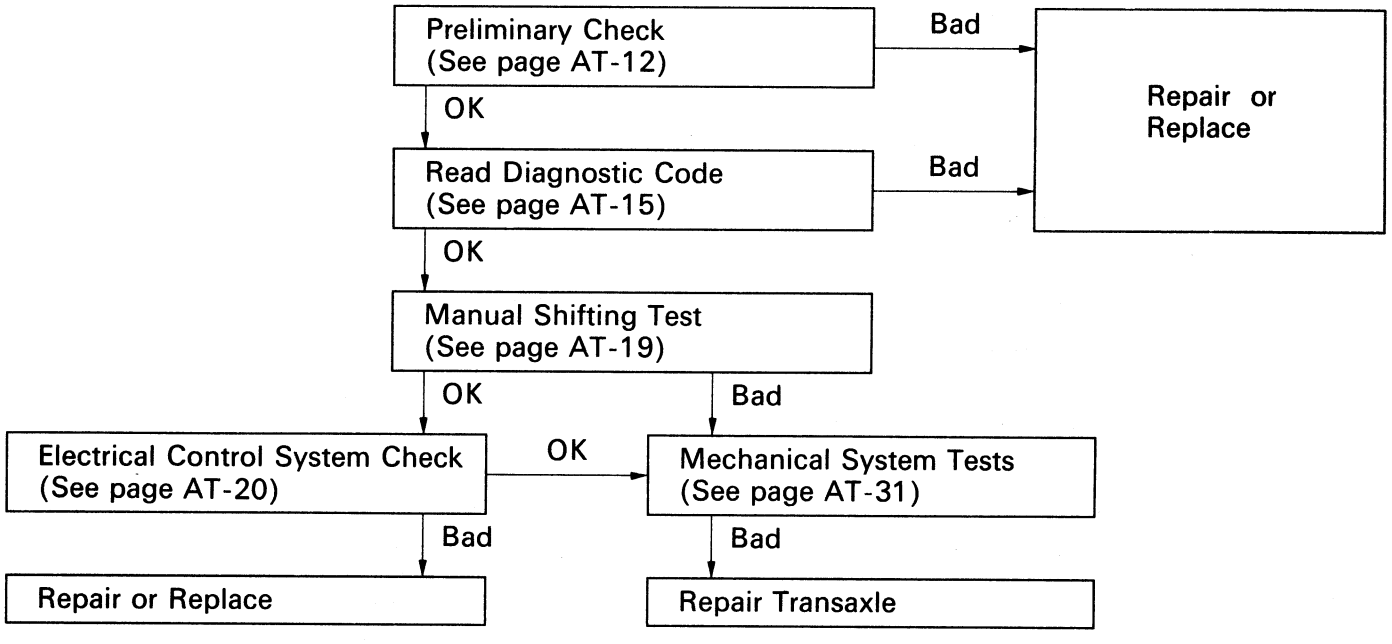

General Troubleshooting

Problem	Possible cause	Remedy	Page A241E
Fluid discolored or smells burnt	Fluid contaminated	Replace fluid	AT-12
	Torque converter faulty	Replace torque converter	AT-43
	Transaxle faulty	Disassemble and inspect transaxle	AT-44
Vehicle does not move in any forward range or reverse	Shift cable out of adjustment	Adjust shift cable	AT-13
	Valve body or primary regulator faulty	Inspect valve body	AT-112
	Parking lock pawl faulty	Inspect parking lock pawl	AT-66
	Torque converter faulty	Replace torque converter	AT-43
	Converter drive plate broken	Replace drive plate	AT-43
	Oil strainer intake screen blocked	Clean screen	AT-49
	Transaxle faulty	Disassemble and inspect transaxle	AT-44
Shift lever position incorrect	Shift cable out of adjustment	Adjust shift cable	AT-13
	Manual valve and lever faulty	Inspect valve body	AT-112
	Transaxle faulty	Disassemble and inspect transaxle	AT-44
Harsh engagement into any drive range	Throttle cable out of adjustment	Adjust throttle cable	AT-12
	Valve body or primary regulator faulty	Inspect valve body	AT-112
	Accumulator pistons faulty	Inspect accumulator pistons	AT-156
	Transaxle faulty	Disassemble and inspect transaxle	AT-44
Delayed 1-2, 2-3 or 3-O/D up-shift, or down-shifts from O/D-3 or 3-2 and shift back to O/D or 3	Electronic control faulty	Inspect electronic control	AT-20
	Valve body faulty	Inspect valve body	AT-112
	Solenoid valve faulty	Inspect solenoid valve	AT-28
	Throttle cable out of adjustment	Adjust throttle cable	AT-12
Slips on 1-2, 2-3 or 3-O/D up-shift, or slips or shudders on acceleration	Shift cable out of adjustment	Adjust shift cable	AT-13
	Throttle cable out of adjustment	Adjust throttle cable	AT-12
	Valve body faulty	Inspect valve body	AT-112
	Solenoid valve faulty	Inspect solenoid valve	AT-28
	Transaxle faulty	Disassemble and inspect transaxle	AT-44
Drag, binding or tie-up on 1-2, 2-3, or 3-O/D up-shift	Shift cable out of adjustment	Adjust shift cable	AT-13
	Valve body faulty	Inspect valve body	AT-112
	Transaxle faulty	Disassemble and inspect transaxle	AT-44

General Troubleshooting (Cont'd)

Problem	Possible cause	Remedy	Page A241E
No lock-up in 2nd, 3rd or O/D	Electronic control faulty	Inspect electronic control	AT-20
	Valve body faulty	Inspect valve body	AT-112
	Solenoid valve faulty	Inspect solenoid valve	AT-28
	Transaxle faulty	Disassemble and inspect transaxle	AT-44
Harsh down-shift	Throttle cable out of adjustment	Adjust throttle cable	AT-13
	Throttle cable and cam faulty	Inspect throttle cable and cam	AT-50
	Accumulator pistons faulty	Inspect accumulator pistons	AT-156
	Valve body faulty	Inspect valve body	AT-112
	Transaxle faulty	Disassemble and inspect transaxle	AT-44
No down-shift when coasting	Valve body faulty	Inspect valve body	AT-112
	Solenoid valve faulty	Inspect solenoid valve	AT-28
	Electronic control faulty	Inspect electronic control	AT-20
Down-shift occurs too quickly or too late while coasting	Throttle cable faulty	Inspect throttle cable	AT-12
	Valve body faulty	Inspect valve body	AT-112
	Transaxle faulty	Disassemble and inspect transaxle	AT-44
	Solenoid valve faulty	Inspect solenoid valve	AT-28
	Electronic control faulty	Inspect electronic control	AT-20
No O/D-3, 3-2 or 2-1 kick-down	Solenoid valve faulty	Inspect solenoid valve	AT-28
	Electronic control faulty	Inspect electronic control	AT-20
	Valve body faulty	Inspect valve body	AT-112
	Throttle cable out of adjustment	Adjust throttle cable	AT-12
No engine braking in 2 or L range	Solenoid valve faulty	Inspect solenoid valve	AT-28
	Electronic control faulty	Inspect electronic control	AT-20
	Valve body faulty	Inspect valve body	AT-112
	Transaxle faulty	Disassemble and inspect transaxle	AT-44
Vehicle does not hold in P range	Shift cable out of adjustment	Adjust shift cable	AT-13
	Parking lock pawl and spring faulty	Inspect cam and spring	AT-66

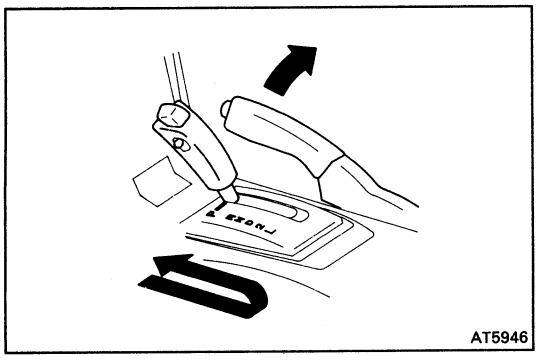

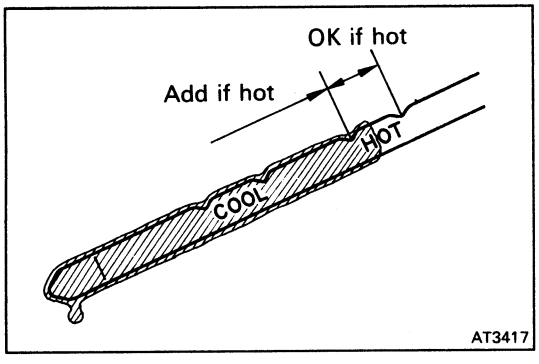

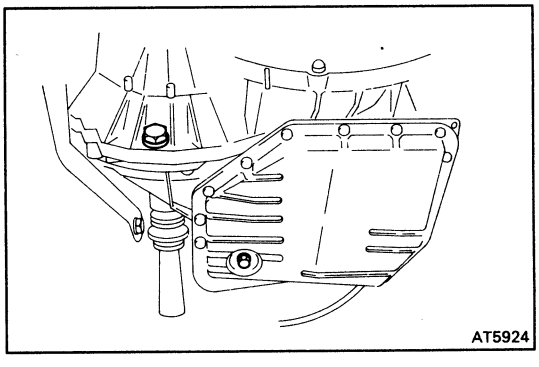

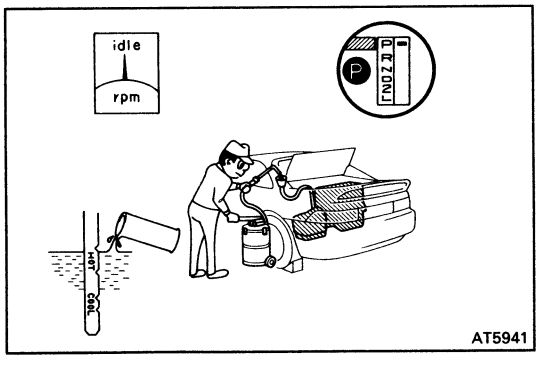

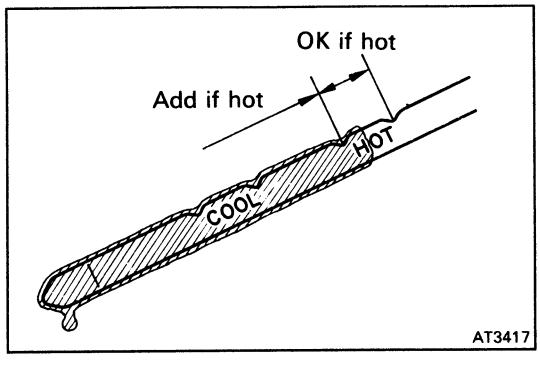

Preliminary Check

1. CHECK FLUID LEVEL

HINT: The vehicle must have been driven so that the engine and transmission are at normal operating temperature.
(Fluid temperature: 70 – 80 °C or 158 – 176 °F)

(a) Park the vehicle on a level surface, set the parking brake.

(b) With the engine idling, shift the selector into each gear from P range to L range and return to P range.

HINT: Depress the brake pedal.

(c) Pull out the transmission dipstick and wipe it clean.

(d) Push it back fully into the tube.

(e) Pull it out and check that the fluid level is in the HOT range. If the level is at the low side of the hot range, and fluid.

Fluid type: ATF DEXRON®II

NOTICE: Do not overfill.

2. CHECK FLUID CONDITION

If the fluid smells burnt or is black, replace it.

3. REPLACE ATF

NOTICE: Do not overfill.

(a) Remove the drain plug and drain the fluid.

(b) Reinstall the drain plug securely.

(c) With the engine OFF, add new fluid through the dipstick tube.

Fluid: ATF DEXRON®II

Capacity:
8.0 liters (8.5 US qts, 7.0 Imp. qts)
Drain and refill (Reference):
3.3 liters (3.5 US qts, 8.9 Imp. qts)

(d) Start the engine and shift the selector into all positions from P through L and then shift into P.

(e) With the engine idling, check the fluid level. Add fluid up to the "COOL" level on the dipstick.

(f) Check the fluid level at the normal fluid temperature (70 – 80 °C or 158 – 176 °F) and add as necessary.

NOTICE: Do not overfill.

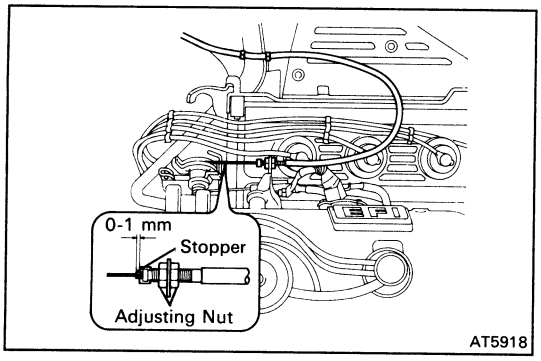

4. INSPECT AND ADJUST THROTTLE CABLE

(a) Check that the throttle valve is fully closed.

(b) Check that the inner cable is not slack.

(c) Measure the distance between the outer cable end and stopper on the cable.

Standard distance: 0 – 1 mm (0 – 0.04 in.)

If the distance is not standard, adjust the cable by the adjusting nuts.

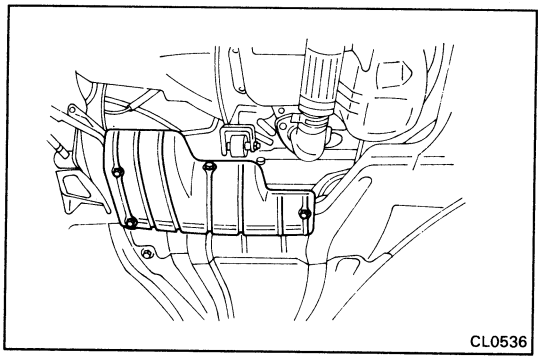

5. INSPECT AND ADJUST SHIFT CABLE

When shifting the shift lever from the N position to other positions, check that the lever can be shifted smoothly and accurately to each position and that the position indicator correctly indicates the position.

If the indicator is not aligned with the correct position, carry out the following adjustment procedure.

(a) Remove the No. 1 engine under cover.

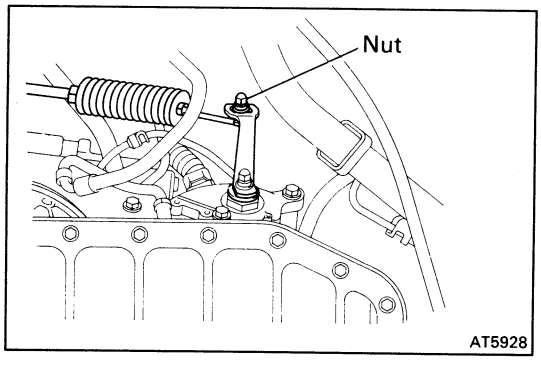

(b) Loosen the swivel nut on manual shift lever.

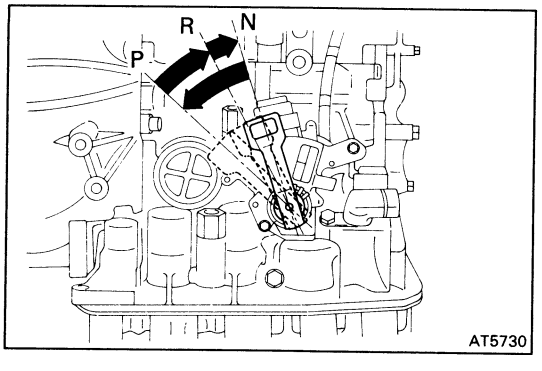

(c) Push the manual shift lever fully toward the right side of the vehicle.

(d) Return the lever two notches to NEUTRAL position.

(e) Set the shift lever to N.

(f) While holding the lever lightly toward the R range side, tighten the swivel nut.

(g) Install the No. 1 engine under cover.

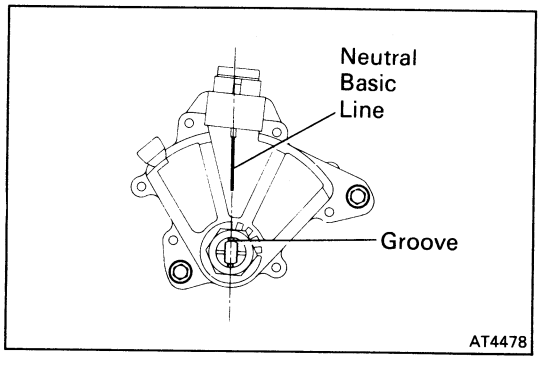

6. ADJUST NEUTRAL START SWITCH

If the engine will start with the shift selector in any range other than N or P range, adjustment is required.

(a) Loosen the neutral start switch bolts and set the shift selector to the N range.

(b) Align the groove and neutral basic line.

(c) Hold in position and tighten the bolts.

Torque: 55 kg-cm (48 in.-lb, 5.4 N·m)

7. INSPECT IDLE SPEED (N RANGE)

Idle speed: 700 ± 50 rpm

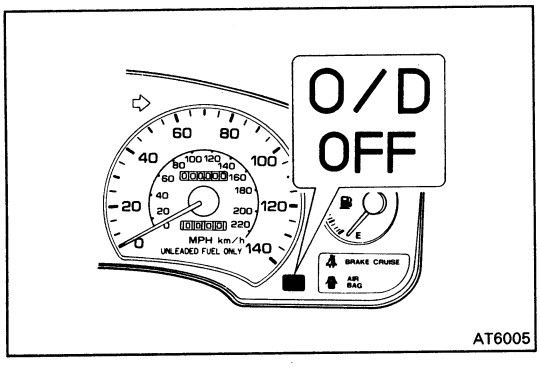

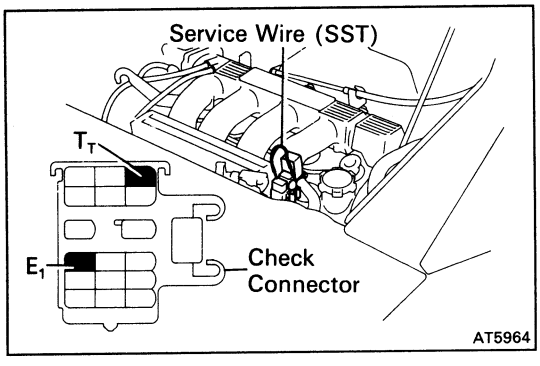

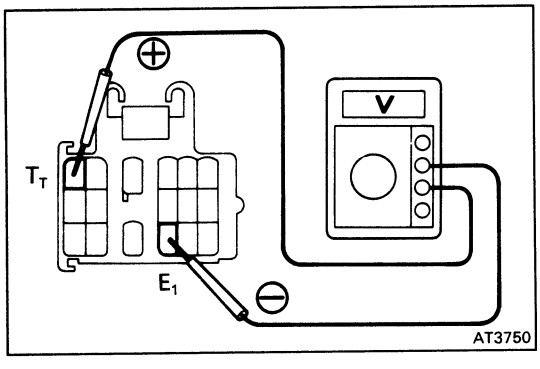

Diagnosis System

DESCRIPTION

1. A self-diagnosis function is built into the electrical control system. Warning is indicated by the overdrive OFF indicator.

   HINT: Warning and diagnostic codes can be read only when the overdrive switch is ON. If OFF, the overdrive OFF indicator is lit continuously and will not blink.

   (a) If a malfunction occurs within the speed sensors or solenoids, the overdrive OFF light will not blink to warn the driver.
   However, there will be no warning of a malfunction with lock-up solenoid.

   (b) The diagnostic code can be read by the number of blinks of the overdrive OFF indicator when terminals T_T and E_1 are short-circuited. (See page AT-15)

   (c) The throttle position sensor or brake signal are not indicated, but inspection can be made by checking the voltage at terminal T_T of the check connector.

   (d) The signals to each gear can be checked by measuring the voltage at terminal T_T of the check connector while driving.

2. The diagnostic (malfunction) code is retained in memory by the ECU and due to back-up voltage, is not canceled out when the engine is turned off. Consequently, after repair, it is necessary to turn the ignition switch off and remove the fuse EFI (15A) or disconnect the ENGINE and ECT ECU connector to cancel out the diagnostic (malfunction) code. (See page AT-16)

   HINT:
   - Low battery voltage will cause faulty operation of the diagnosis system. Therefore, always check the battery first.
   - Use a voltmeter and ohmmeter that have an impedance of at least 10 kΩ/V.

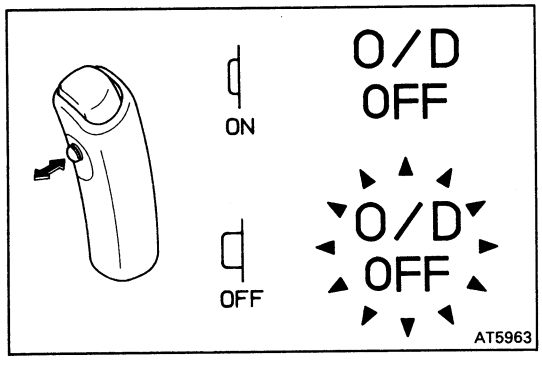

CHECK O/D OFF INDICATOR LIGHT

1. Turn the ignition switch ON.
2. The O/D OFF light will come on when the O/D switch is placed at OFF.
3. When the O/D switch is set to ON, the O/D OFF light should go out.

   If the O/D OFF light flashes when the O/D switch is set to ON, the electronic control system is faulty.

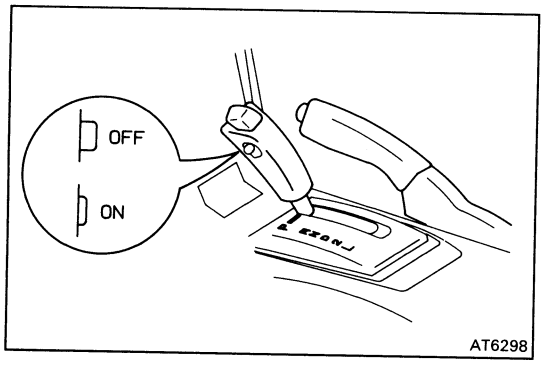

READ DIAGNOSTIC CODE

1. TURN IGNITION SWITCH AND O/D SWITCH TO ON

Do not start the engine.

HINT: Warning and diagnostic codes can be read only when the overdrive switch is ON. If OFF, the overdrive OFF light will light continuously and will not blink.

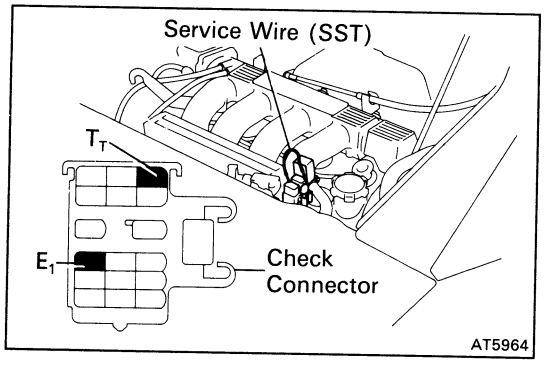

2. SHORT T_T TERMINAL CIRCUIT OF CHECK CONNECTOR

Using SST, short terminals T_T and E_1 of the check connector.

SST 09843-18020

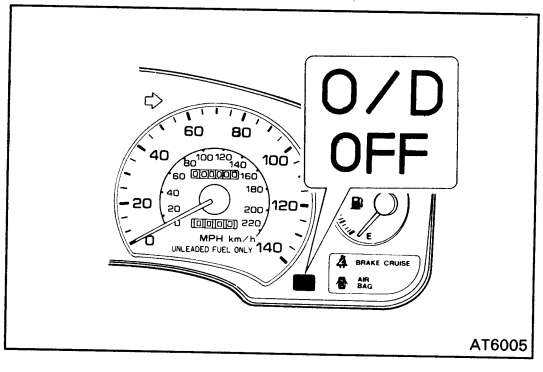

3. READ DIAGNOSTIC CODE

Read the diagnostic code as indicated by the number of times the O/D OFF indicator flashes.

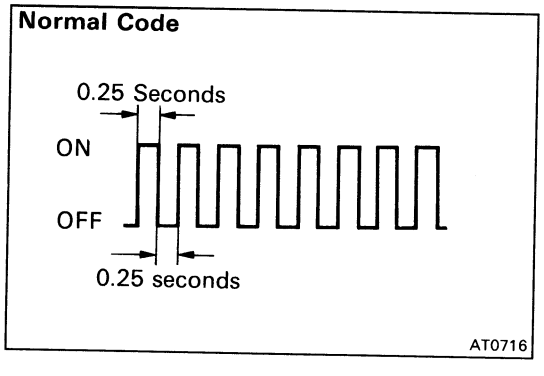

(Diagnostic Code Indication)

- If the system is operating normally, the light will blink once every 0.25 seconds.

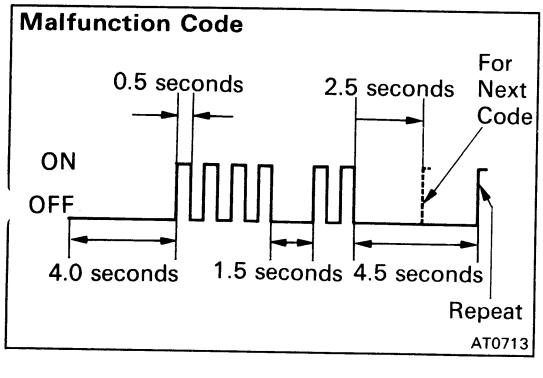

- In the event of a malfunction, the light will blink once every 0.5 seconds. The number of blinks will equal the first number and, after 1.5 seconds pause, the second number of the two digit diagnostic code. If there are two or more codes, there will be a 2.5 seconds pause between each.

HINT: In the event of several trouble codes occurring simultaneously, indication will begin from the smaller value and continue to the larger.

4. REMOVE SST

SST 09843-18020

DIAGNOSTIC CODES

Code No.	Light Pattern	Diagnosis System
—		Normal
42		Defective No. 1 speed sensor (in combination meter) – severed wire harness or short circuit
61		Defective No. 2 speed sensor (in ATM) – severed wire harness or short circuit
62		Severed No. 1 solenoid or short circuit – severed wire harness or short circuit
63		Severed No. 2 solenoid or short circuit – severed wire harness or short circuit
64		Severed lock-up solenoid or short circuit – severed wire harness or short circuit

AT2020

HINT: If codes 62, 63 or 64 appear, there is an electrical malfunction in the solenoid.
Causes due to mechanical failure, such as a stuck valve, will not appear.

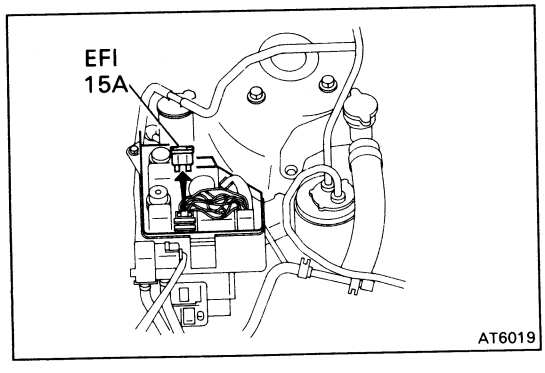

AT6019

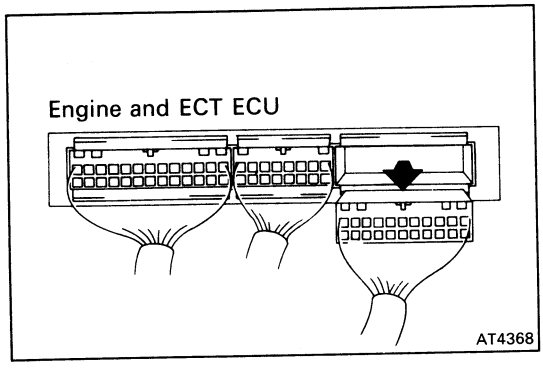

AT4368

CANCEL OUT DIAGNOSTIC CODE

1. After repair of the trouble area, the diagnostic code retained in memory by the Engine an ECT ECU must be canceled by removing the fuse EFI (15A) for 10 seconds or more, depending on ambient temperature (the lower the temperature, the longer the fuse must be left out) with the ignition switch OFF.

   HINT:
   - Cancellation can be also done by removing the battery negative (–) terminal, but in this case other memory systems will be also canceled out.
   - The diagnostic code can be also canceled out by disconnecting the Engine and ECT ECU connector.
   - If the diagnostic code is not canceled out, it will be retained by the Engine and ECT ECU and appear along with a new code in event of future trouble.

2. After cancellation, perform a road test to confirm that a "normal code" is now read on the O/D OFF light.

TROUBLESHOOTING FLOW-CHART

HINT:

- If diagnostic code Nos. 42, 61, 62 or 63 are output, the overdrive OFF indicator light will begin to blink immediately to warn the driver. However, an impact or shock may cause the blinking to stop; but the code will still be retained in the Engine and ECT ECU memory until canceled out.
- There is no warning for diagnostic code No. 64.
- In the event of a simultaneous malfunction of both No. 1 and No.2 speed sensors, no diagnostic code will appear and the fail-safe system will not function. However, when driving in the D range, the transaxle will not up-shift from first gear, regardless of the vehicle speed.

1. Diagnostic code 42 (No. 1 speed sensor circuitry)

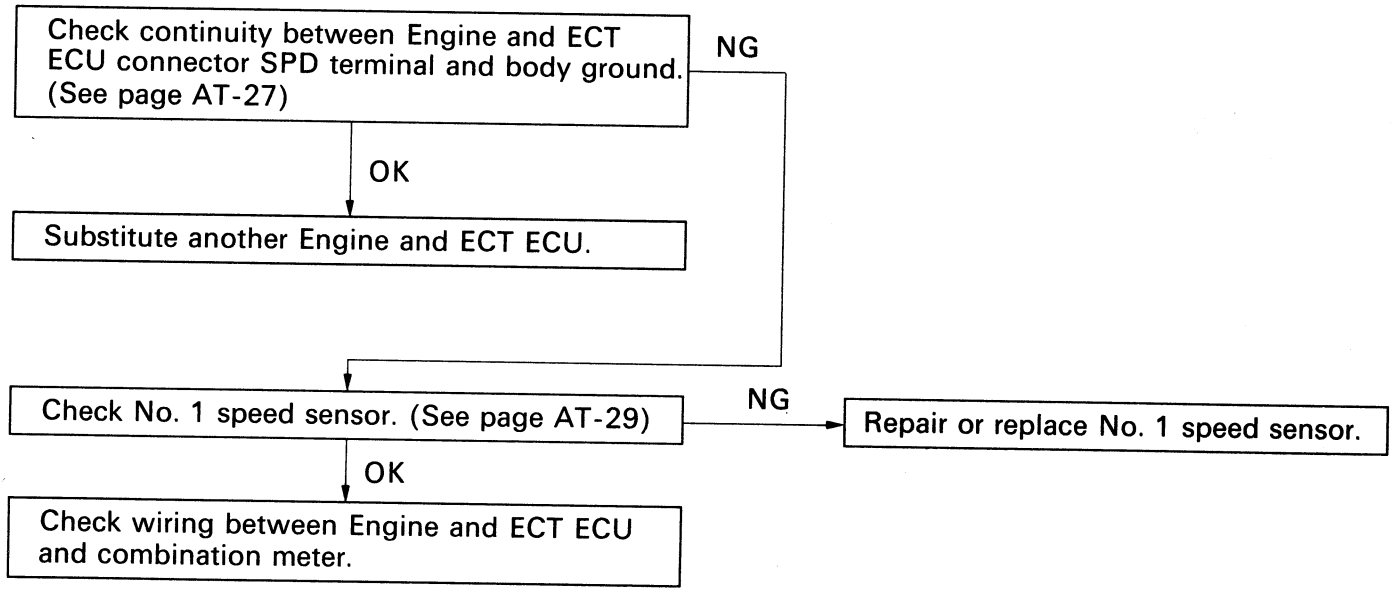

2. Diagnostic code 61 (No. 2 speed sensor circuitry)

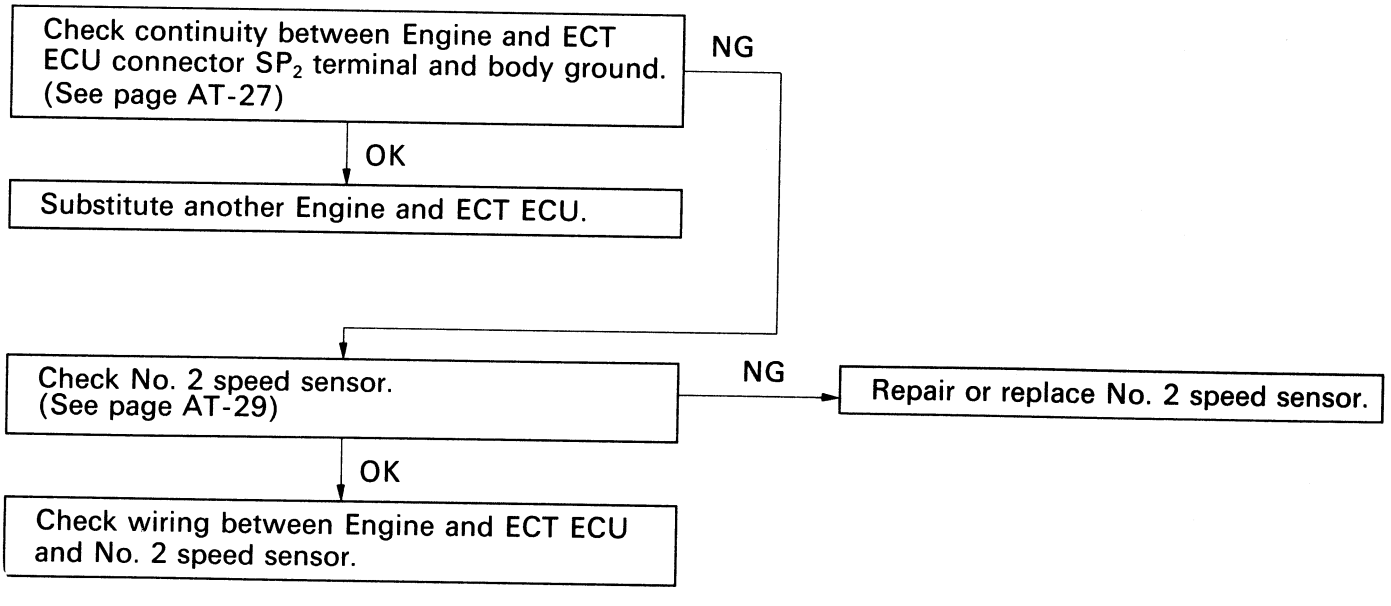

3. Diagnostic code 62 (No. 1 solenoid valve circuitry)

Check resistance of No. 1 solenoid valve at Engine and ECT ECU connector. (See page AT-28)

NG

OK

Substitute another Engine at ECT ECU.

Remove the oil pan and check resistance of No. 1 solenoid valve connector and body ground.
Resistance: 11 – 15 Ω

NG → Replace No. 1 solenoid valve.

OK

Check wiring between No. 1 solenoid valve and Engine and ECT ECU.

4. Diagnostic code 63 (No. 2 solenoid valve circuitry)

Check resistance of No. 2 solenoid valve at Engine and ECT ECU connector. (See page AT-28)

NG

OK

Substitute another Engine and ECT ECU.

Remove the oil pan and check resistance of No. 2 solenoid valve connector and body ground.
Resistance: 11 – 15 Ω

NG → Replace No. 2 solenoid valve.

OK

Check wiring between No. 2 solenoid valve and Engine and ECT ECU.

5. Diagnostic code 64 (Lock-up solenoid valve circuitry)

Check resistance of lock-up solenoid valve at Engine and ECT ECU connector. (See page AT-28)

NG

OK

Substitute another Engine and ECT ECU.

Remove the oil pan and check resistance of lock-up solenoid valve connector and body ground.
Resistance: 11 – 15 Ω

NG → Replace lock-up solenoid valve.

OK

Check wiring between lock-up solenoid valve and Engine and ECT ECU.

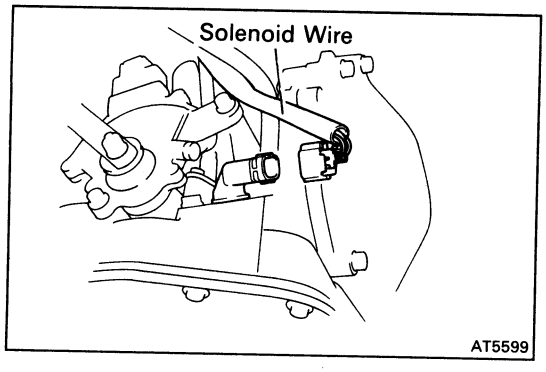

Manual Shifting Test

HINT: With this test, it can be determined whether the trouble lies within the electrical circuit or is a mechanical problem in the transaxle.

1. **DISCONNECT SOLENOID WIRE**

2. **INSPECT MANUAL DRIVING OPERATION**

Check that the shift and gear positions correspond with the table below.

Shift position	D range	2 range	L range	R range	P range
Gear position	O/D	3rd	1st	Reverse	Pawl Lock

HINT: If the L, 2 and D range gear positions are difficult to distinguish, perform the following road test.

- While driving, shift through the L, 2 and D ranges. Check that the gear change corresponds to the shift position.

If any abnormality is found in the above test, the problem lies in transaxle itself.

3. **CONNECT SOLENOID WIRE**

4. **CANCEL OUT DIAGNOSTIC CODE**
(See page AT-16)

REFERENCE: Possible gear positions in accordance with solenoid operating conditions.

Range	NORMAL			No. 1 SOLENOID MALFUNCTIONING			No. 2 SOLENOID MALFUNCTIONING			BOTH SOLENOIDS MALFUNCTIONING		
	Solenoid Valve		Gear Position	Solenoid Valve		Gear Position	Solenoid Valve		Gear Position	Solenoid Valve		Gear Position
	No. 1	No. 2		No. 1	No. 2		No. 1	No. 2		No. 1	No. 2	
D range	ON	OFF	1st	X	ON	3rd	ON	X	1st	X	X	O/D
	ON	ON	2nd	X	ON	3rd	OFF	X	O/D	X	X	O/D
	OFF	ON	3rd	X	ON	3rd	OFF	X	O/D	X	X	O/D
	OFF	OFF	O/D	X	OFF	O/D	OFF	X	O/D	X	X	O/D
2 range	ON	OFF	1st	X	ON	3rd	ON	X	1st	X	X	3rd
	ON	ON	2nd	X	ON	3rd	OFF	X	3rd	X	X	3rd
	OFF	ON	3rd	X	ON	3rd	OFF	X	3rd	X	X	3rd
L range	ON	OFF	1st	X	OFF	1st	ON	X	1st	X	X	1st
	ON	ON	2nd	X	ON	2nd	ON	X	1st	X	X	1st

X: Malfunctions

Electronic Control System

ELECTRONIC CONTROL CIRCUIT

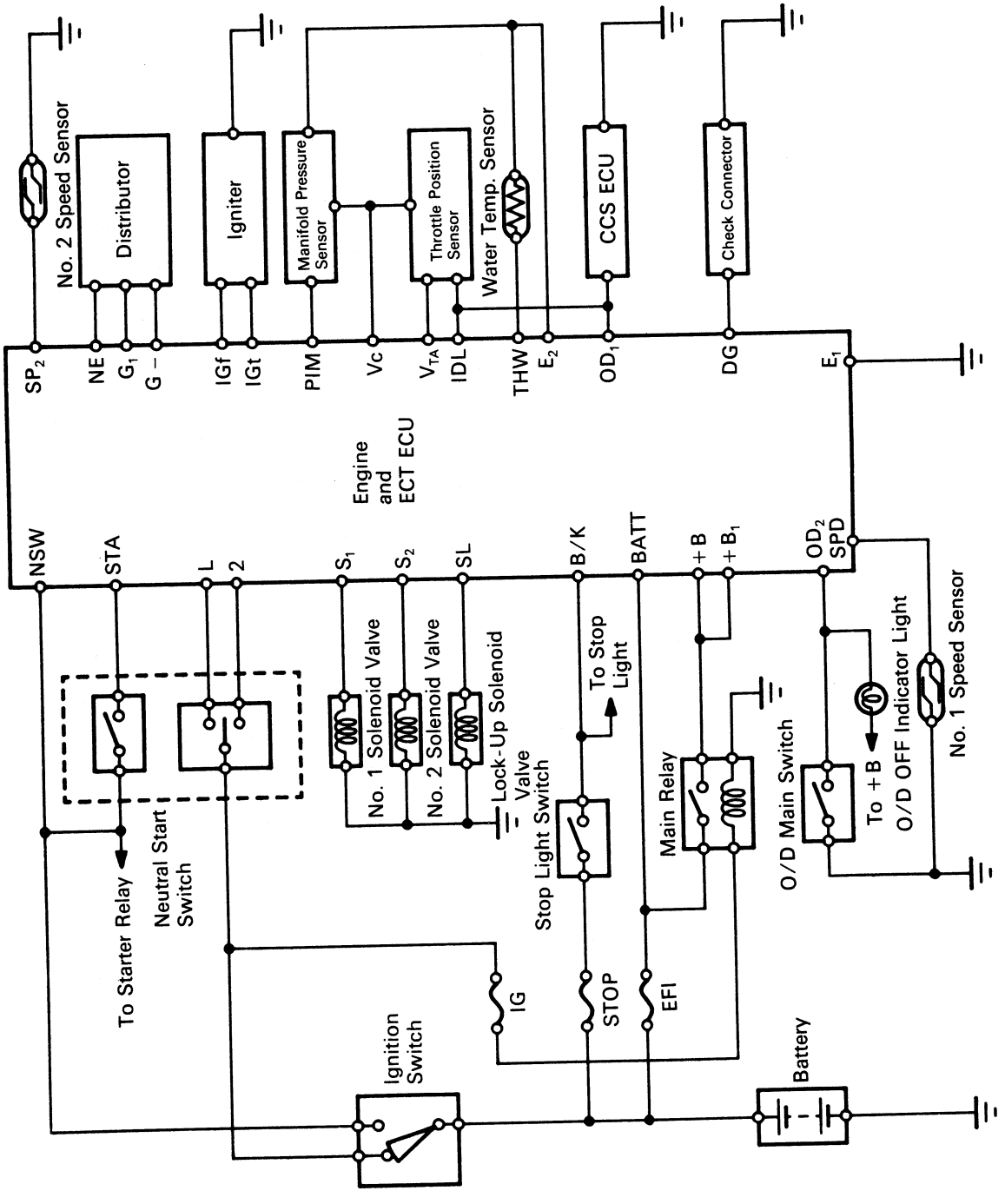

ELECTRONIC CONTROL COMPONENTS

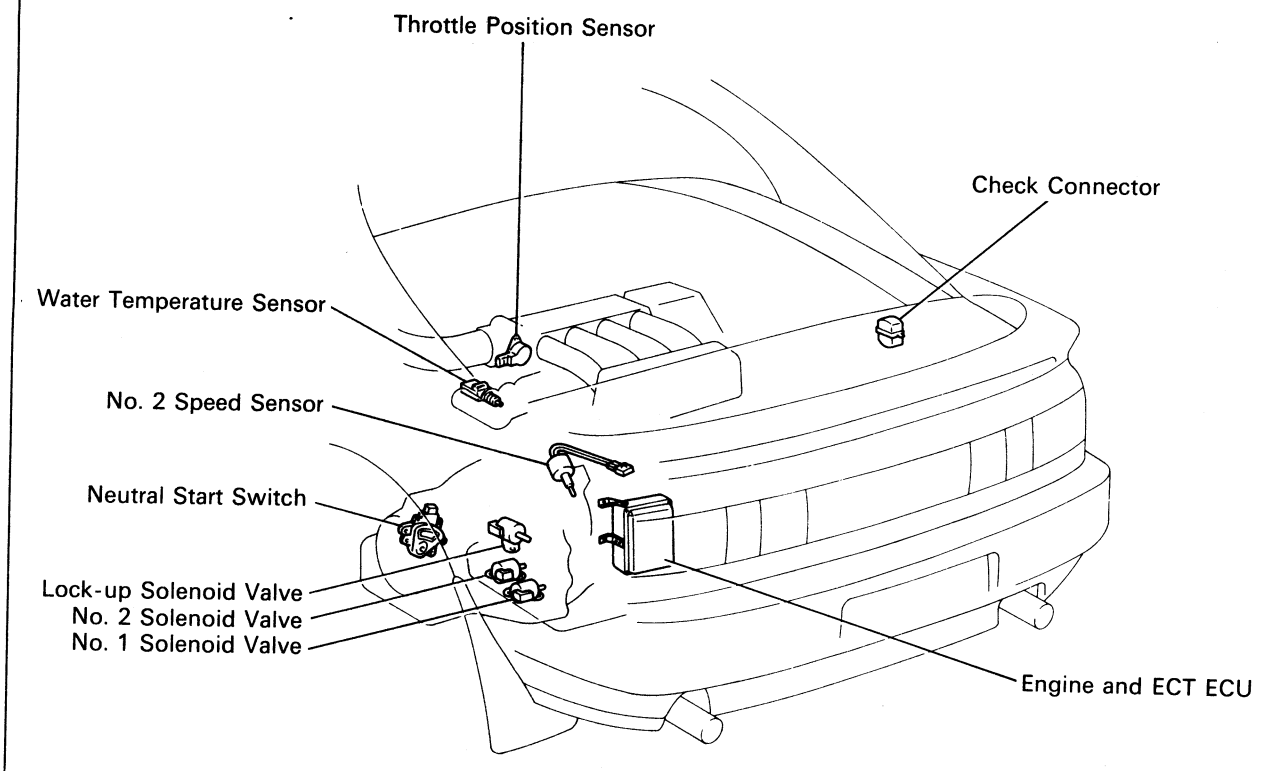

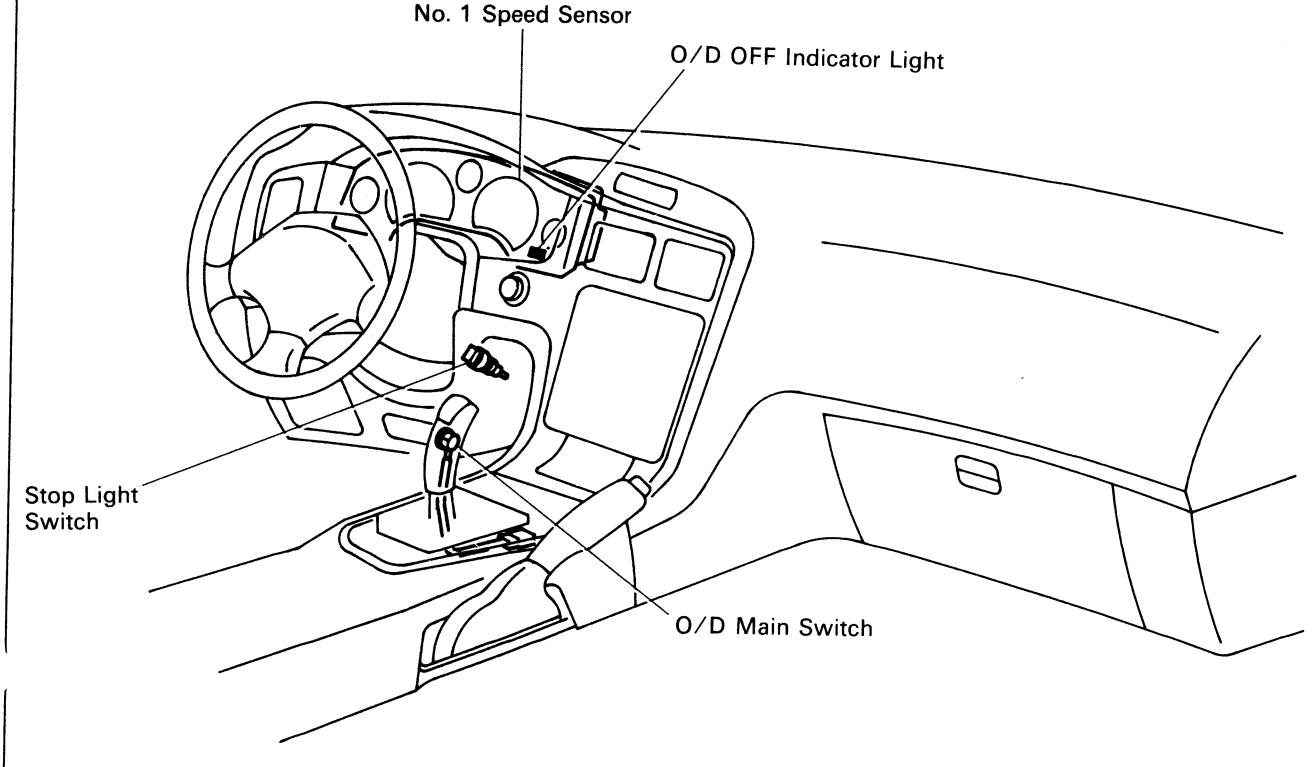

AT6013
AT6295

TROUBLESHOOTING FLOW-CHART

Trouble No. 1 No shifting

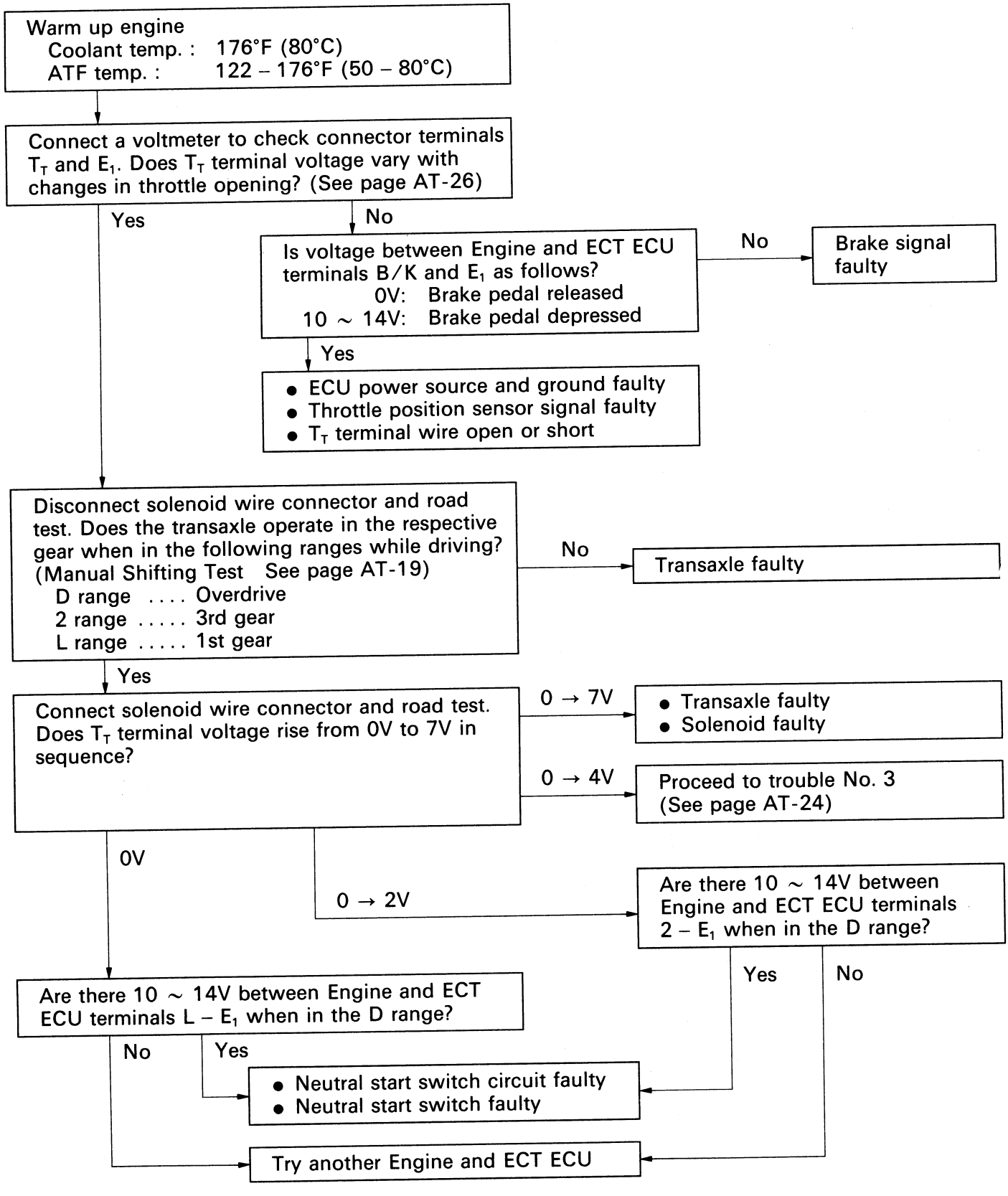

Trouble No. 2 Shift point too high or too low

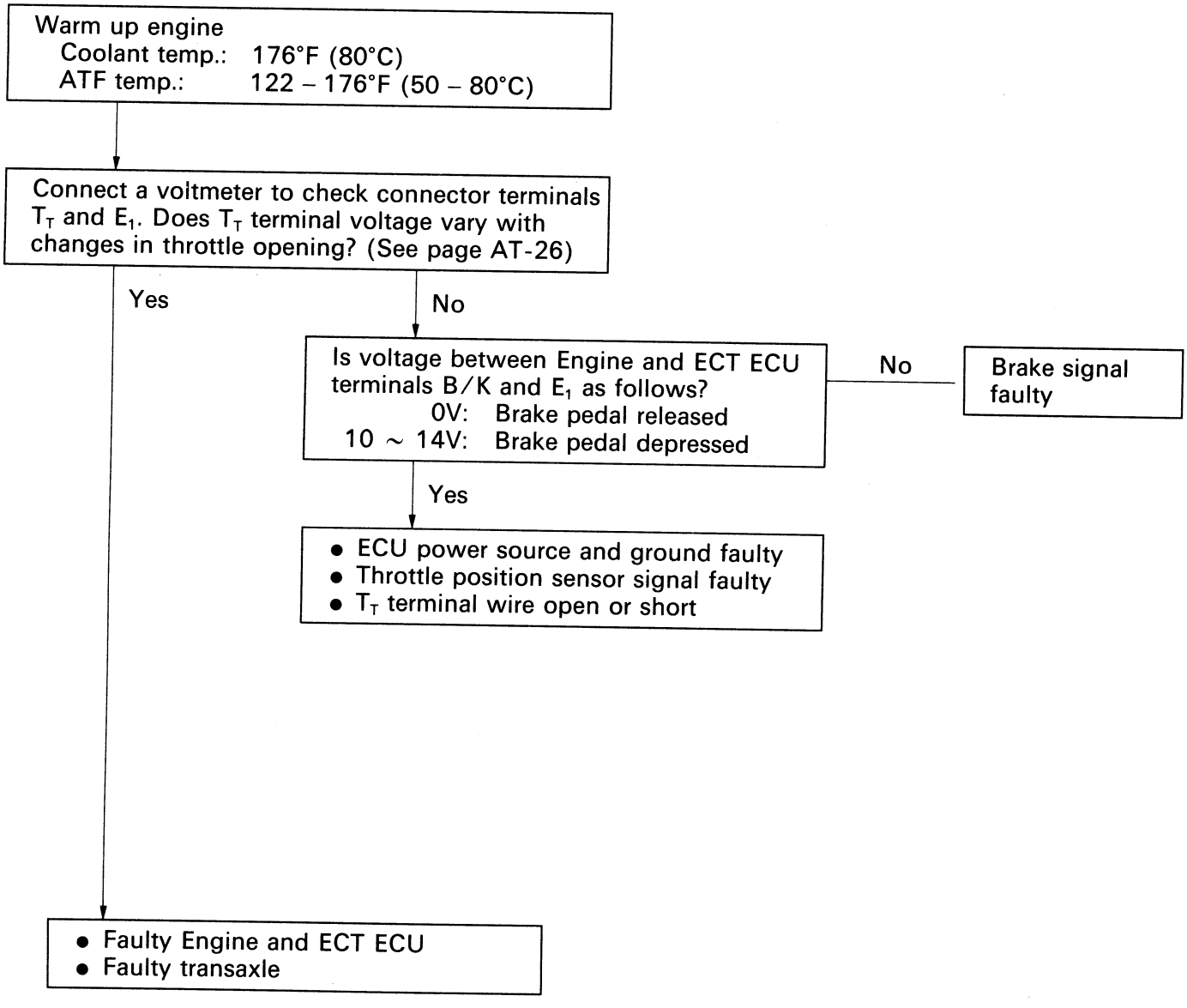

Trouble No. 3 No up-shift to overdrive (After warm-up)

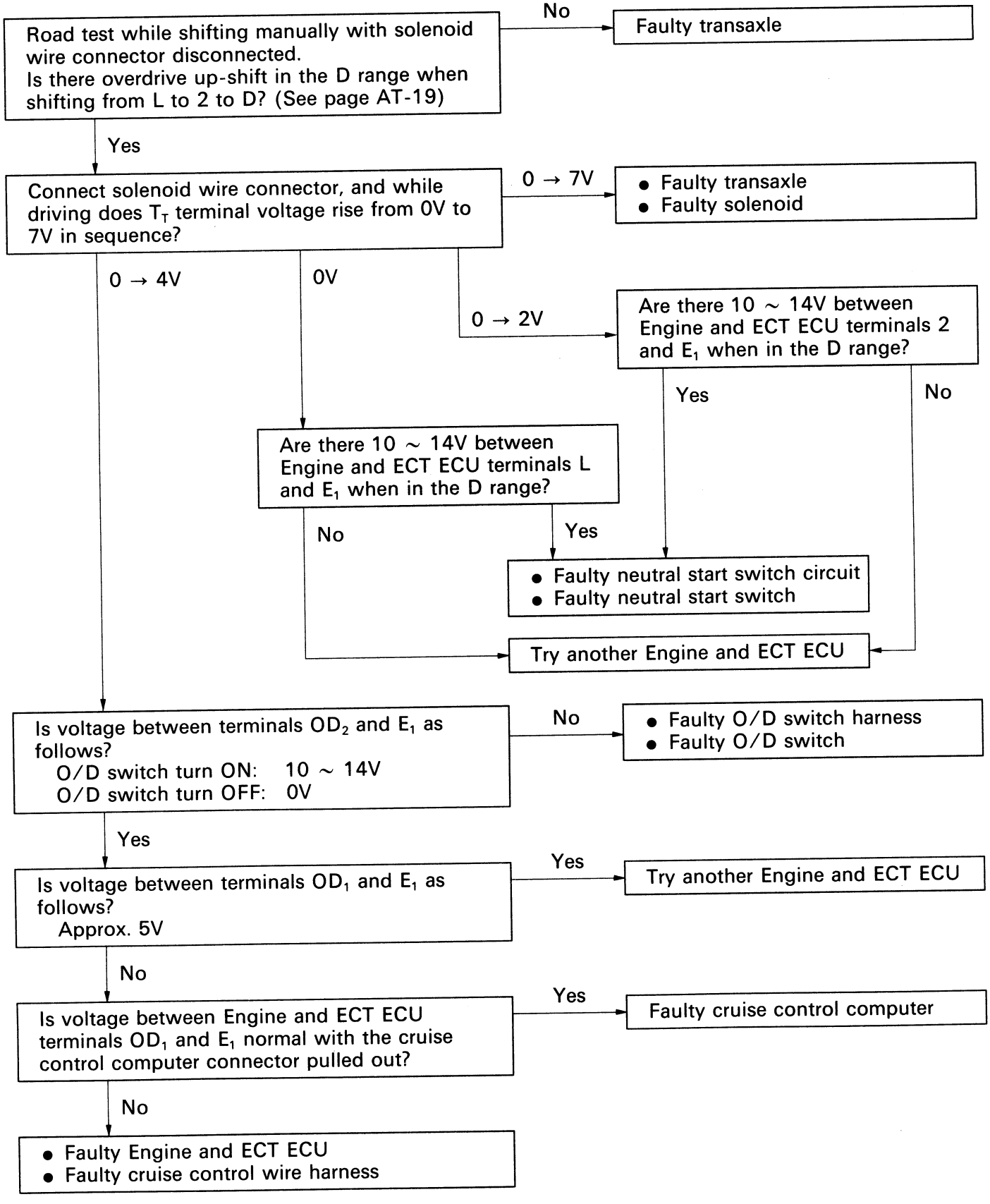

Trouble No. 4 No lock-up (After warm-up)

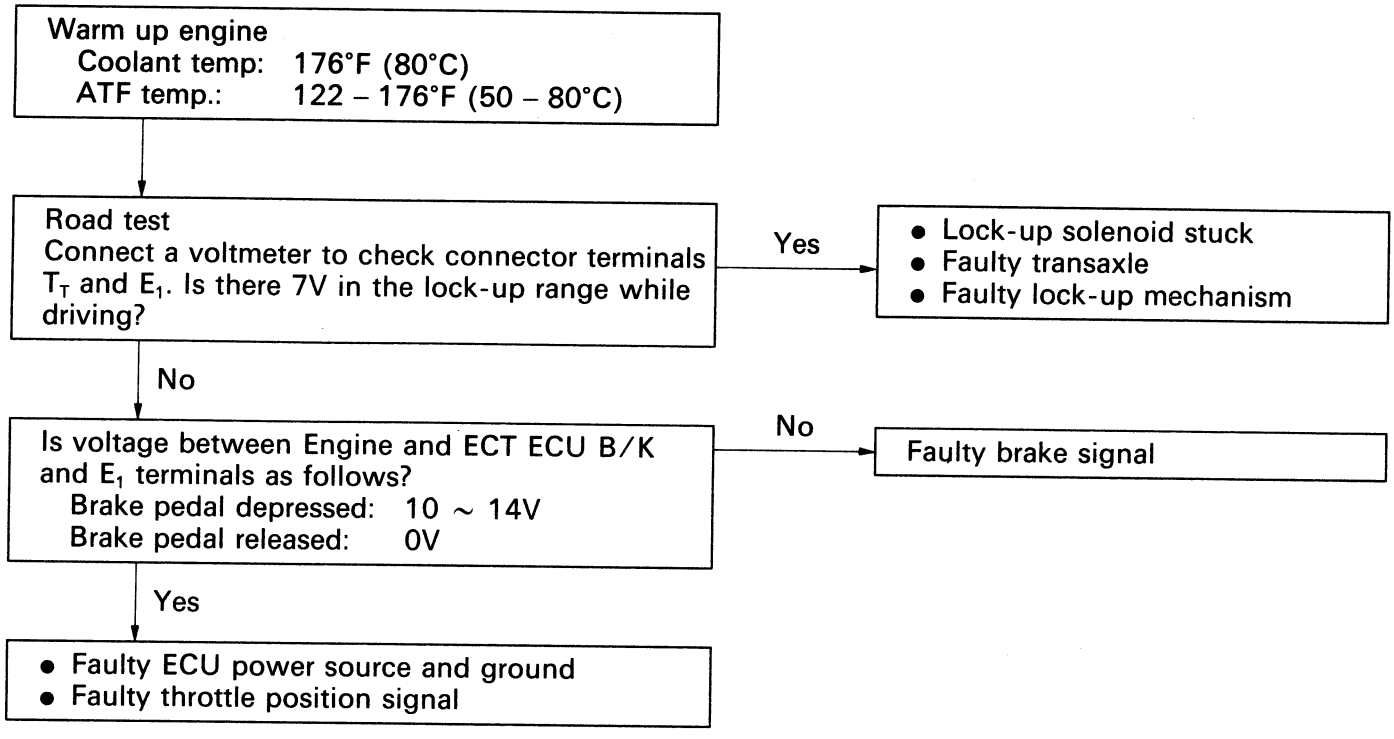

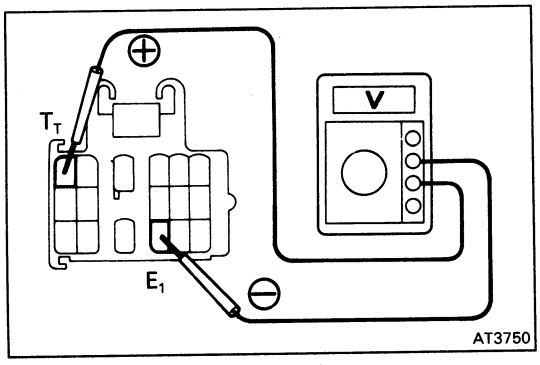

INSPECTION OF T_T TERMINAL VOLTAGE

1. INSPECT THROTTLE POSITION SENSOR SIGNAL

(a) Turn the ignition switch to ON. Do not start the engine.

(b) Connect a voltmeter to terminals T_T and E_1.

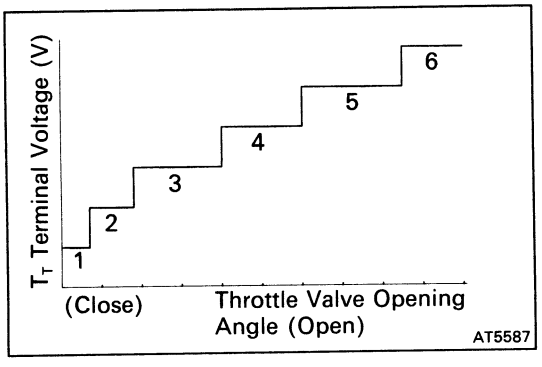

(c) While slowly depressing the accelerator pedal, check that T_T terminal voltage rises in sequence.

If the voltage does not change in proportion to the throttle opening angle, there is a malfunction in the throttle position sensor or circuit.

2. INSPECT BRAKE SIGNAL

(a) Depress the accelerator pedal until the T_T terminal indicates 6V.

(b) Depress the brake pedal and check the voltage reading from the T_T terminal.

Brake pedal depressed 0V
Brake pedal released 6V

If not as indicated, there is a malfunction in either the stop light switch or circuit.

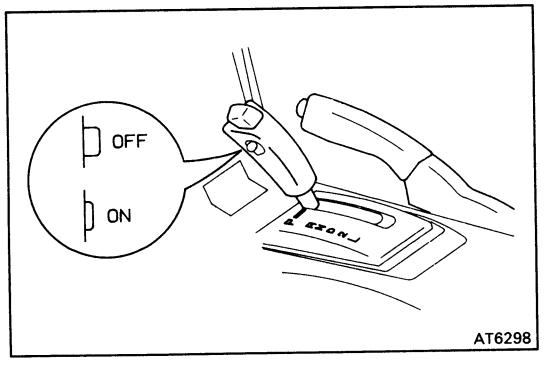

T_T Terminal (V)	Gear position
0	1st
2	2nd
4	3rd
6	O/D
7	O/D Lock up

3. INSPECT EACH UP-SHIFT POSITION

(a) Warm up the engine.

Coolant temperature: 176°F (80°C)

(b) Turn the O/D switch to "ON".

(c) Place the pattern select switch in "NORMAL" and the shift level into the D range.

(d) During a road test (above 10 km/h or 6 mph) check that voltage at the T_T terminal is as indicated below for each up-shift position.

If the voltage rises from 0V to 7V in the sequence shown, the control system is okay.

The chart on the left shows the voltmeter reading and corresponding gears.

HINT: Determine the gear position by a light shock or change in engine rpm when shifting.

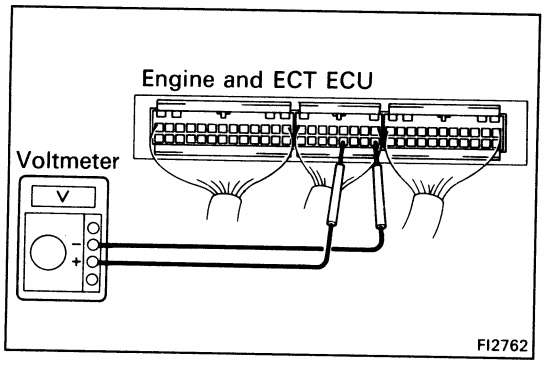

INSPECTION OF ELECTRONIC CONTROL COMPONENTS

1. INSPECT VOLTAGE OF ENGINE AND ECT ECU CONNECTOR

(a) Turn on the ignition switch.

(b) Do not disconnect Engine and ECT ECU connector. Measure the voltage at each terminal.

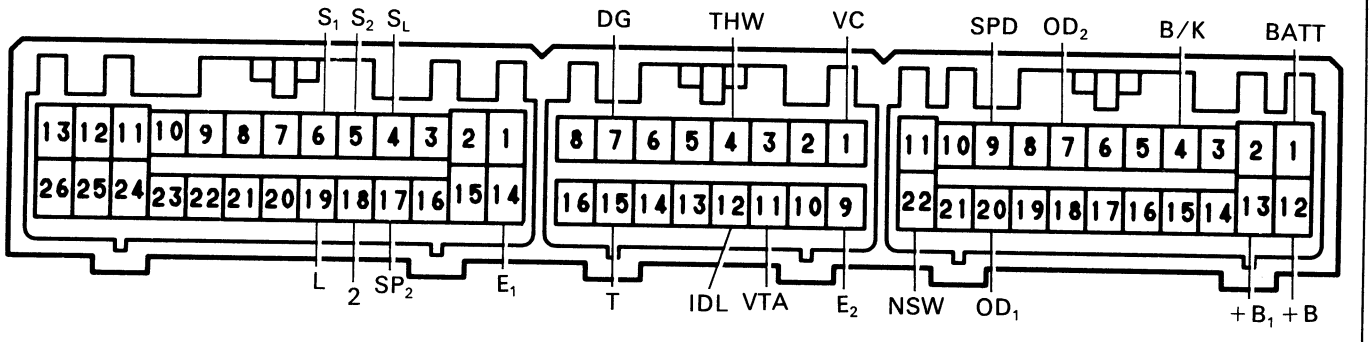

Vd-64-2

Terminal	Measuring condition		Voltage (V)
$S_1 - E_1$	Ignition switch turned ON		10 – 14
S_2, $S_L - E_1$	Ignition switch turned ON		1 or less
STP – E_1	Brake pedal is depressed		10 – 14
	Brake pedal is released		1 or less
THW – E_2	Coolant temp. 176°F (80°C)		0.1 – 0.8
IDL – E_2	Throttle valve fully closed		1 or less
	Throttle valve open		4.5 – 5.5
VTA – E_2	Thottle valve fully closed		0.1 – 0.8
	Throttle valve open		4.5 – 5.5
VC – E_2	———		4.5 – 5.5
$OD_1 - E_1$	———		10 – 14
$OD_2 - E_1$	O/D main switch turned ON		10 – 14
	O/D main switch turned OFF		1 or less
SPD – E_1	Cruise control main switch OFF	Standing still	1 or less
		Vehicle moving	Repeat : 0 ↔ 10 – 4
$SP_2 - E_1$	Standing still		1 or less
	Vehicle moving		Repeat : 0 ↔ 4.5 – 5.5

Terminal	Measuring condition	Voltage (V)
NSW – E_1	P, N range	10 – 14
	R, D, 2, L range	1 or less
2 – E_1	2 range	10 – 14
	Except 2 range	1 or less
L – E_1	L range	10 – 14
	Except L range	1 or less
+B, +B – E_1	Ignition switch turned ON	10 – 14
BATT– E_1	All conditions	10 – 14

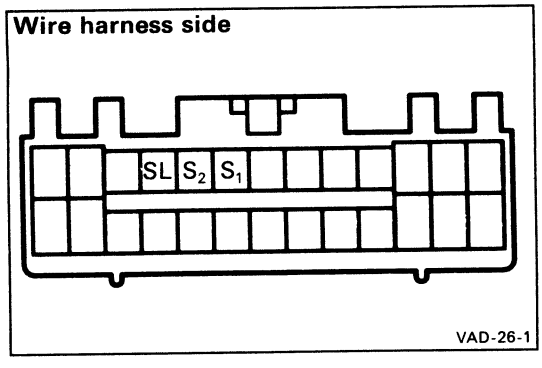

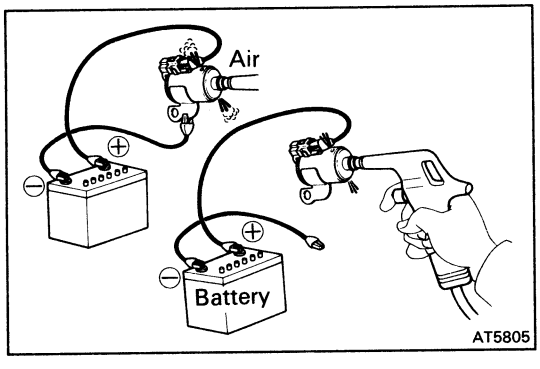

2. INSPECT SOLENOIDS

(a) Disconnect the connector from Engine and ECT ECU.

(b) Measure the resistance between S_1, S_2, S_L and body ground.

Resistance: 11 – 15 Ω

(c) Apply battery voltage to each terminal.
Check that an operation noise can be heard from the solenoid.

3. CHECK SOLENOID SEALS

If there is foreign material in the solenoid valve, there will be no fluid control even with solenoid operation.

Check No. 1, No. 2 and lock-up solenoid valves.

- Applying 5 kg/cm² (71 psi, 490 kPa) of compressed air, check that the solenoid valves do not leak the air.
- When battery voltage is supplied to the solenoids, check that the solenoid valves open.

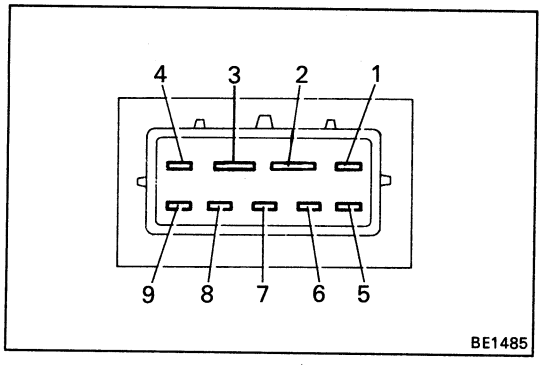

4. INSPECT NEUTRAL START SWITCH

Using an ohmmeter, check the continuity of the terminals for each switch position shown in the table below.

Range \ Terminal	2	3	6	1	5	7	8	9	4
P	○	○	○	○					
R			○		○				
N	○	○	○			○			
D			○				○		
2			○					○	
L			○						○

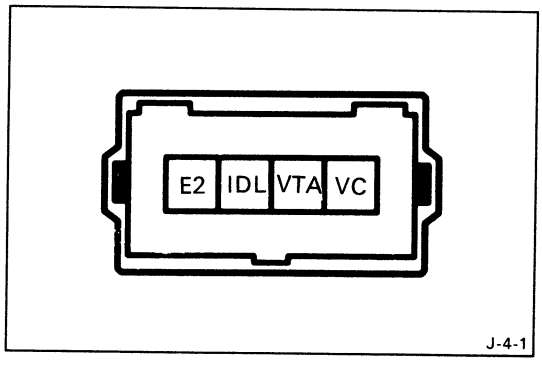

5. INSPECT THROTTLE POSITION SENSOR

Using an ohmmeter, check the resistance between each terminal.

Terminal	Throttle valve condition	Resistance (kΩ)
IDL – E_2	Fully closed	0 – 0.1
	Open	Infinity
Vc – E_2	–	3 – 7
V_{TA} – E_2	Fully closed	0.2 – 0.8
	Fully open	3.2 – 10

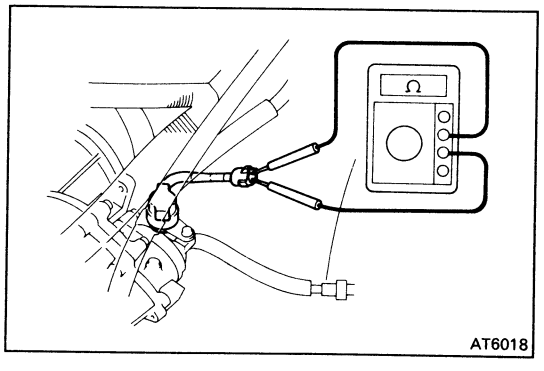

6. INSPECT NO. 2 SPEED SENSOR

(a) Remove the air cleaner assembly.
(b) Jack up a front wheel on one side.
(c) Connect an ohmmeter between the terminals.
(d) Spin the wheel and check that the meter needle deflects from 0 to ∞ Ω.

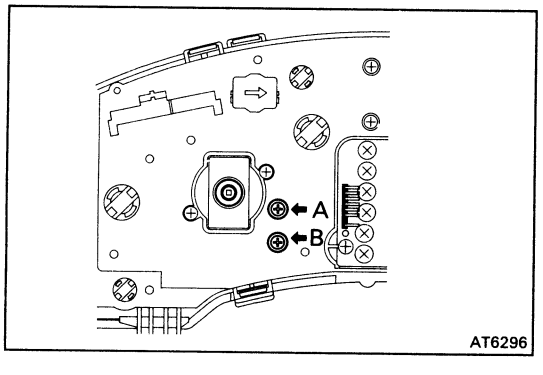

7. INSPECT NO. 1 SPEED SENSOR IN COMBINATION METER

(a) Remove the combination meter.
(b) Connect an ohmmeter between terminals A and B.
(c) Revolve the meter shaft and check that the meter needle repeatedly deflects from 0 Ω to ∞ Ω.

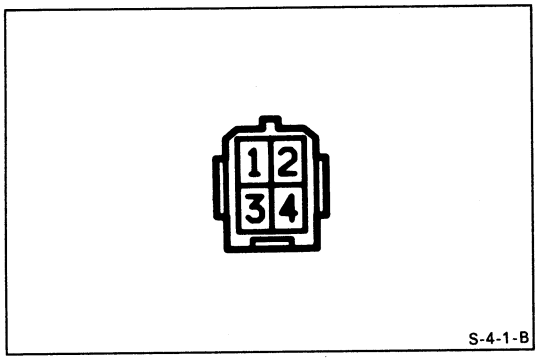

8. INSPECT O/D MAIN SWITCH

Inspect that there is continuity between terminals 1 and 3.

S/W position \ Terminal	1	3
ON		
OFF	O	O

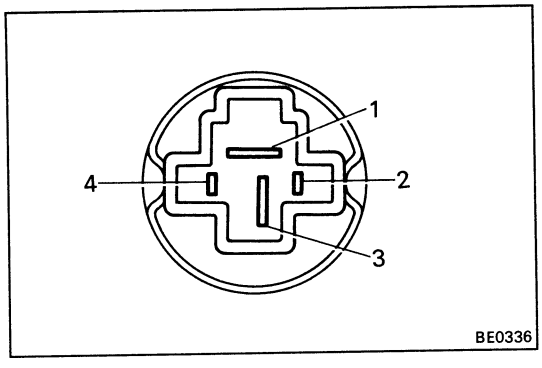

9. INSPECT STOP LIGHT SWITCH

Inspect that there is continuity between terminals 1 and 3.

S/W position \ Terminal	1	3
OFF (Release brake pedal)		
ON (Depress brake pedal)	O	O

Mechanical System Tests

STALL TEST

The object of this test is to check the overall performance of the transaxle and engine by measuring the stall speeds in the D and R ranges.

NOTICE:

- **Perform the test at normal operation fluid temperature (50 – 80°C or 122 – 176°F).**
- **Do not continuously run this test longer than 5 seconds.**
- **To ensure safety, conduct this test in a wide, clear, level area which provides good traction.**
- **The stall test should always be carried out in pairs. One should observe the condition of wheels or wheel stoppers outside the vehicle while the other is performing the test.**

MEASURE STALL SPEED

(a) Chock the front and rear wheels.

(b) Connect a tachometer to the engine.

(c) Fully apply the parking brake.

(d) Keep your left foot pressed firmly on the brake pedal.

(e) Start the engine.

(f) Shift into the D range. Step all the way down on the accelerator pedal with your right foot. Quickly read the stall speed at this time.

Stall speed: 2,550 ± 150 rpm

(g) Perform the same test in R range.

EVALUATION

(a) If the stall speed is the same for both ranges without the rear wheels rotating but lower than specified value:

- Engine output may be insufficient
- Stator one-way clutch is not operating properly

(b) If the stall speed in D range is higher than specified:

- Line pressure too low
- Forward clutch slipping
- No. 2 one-way clutch not operating properly
- Underdrive one-way clutch not operating properly

(c) If the stall speed in R range is higher than specified:

- Line pressure too low
- Direct clutch slipping
- First and reverse brake slipping
- Underdrive brake slipping

(d) If the stall speed in both R and D ranges are higher than specified:

- Line pressure too low
- Improper fluid level
- Underdrive brake slipping

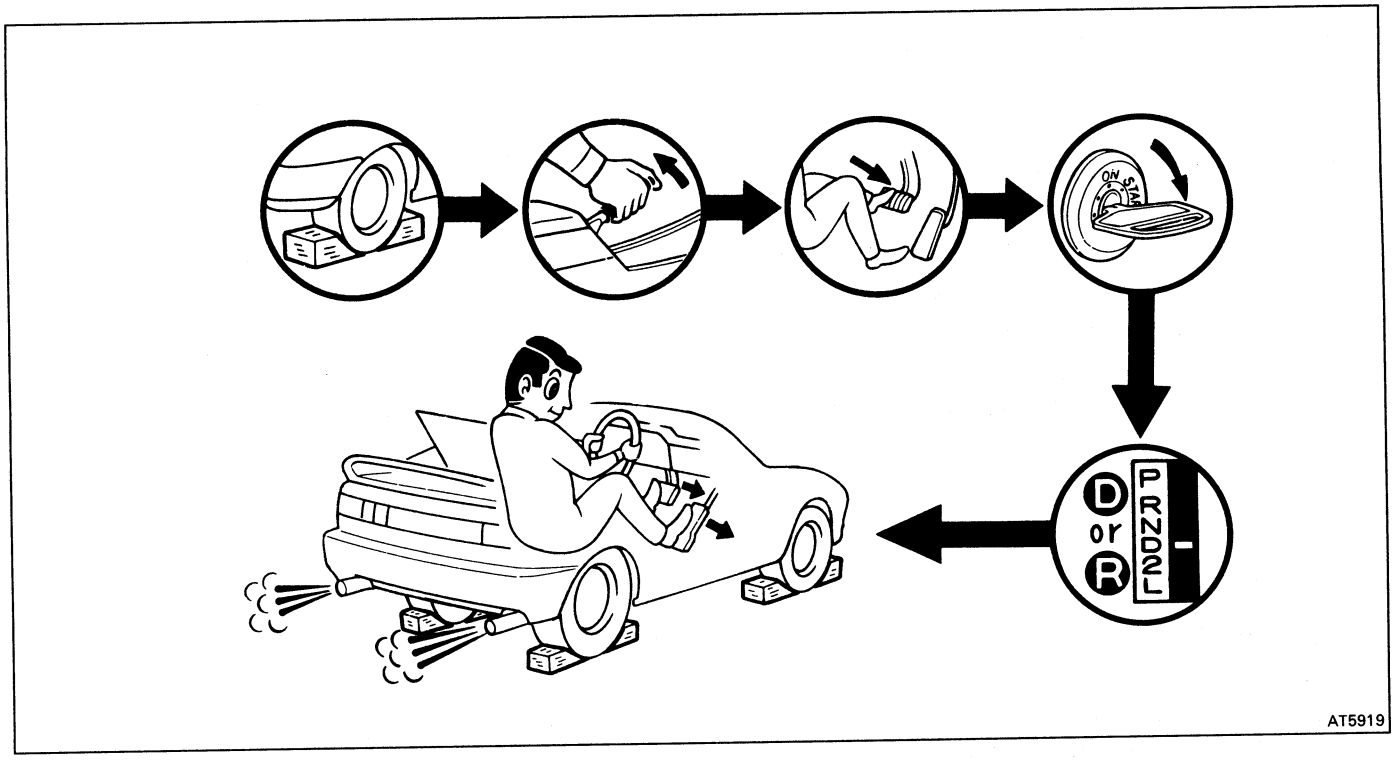

TIME LAG TEST

When the shift lever is shifted while the engine is idling, there will be a certain time lapse or lag before the shock can be felt. This is used for checking the condition of the underdrive clutch, forward clutch, direct clutch and first and reverse brake.

NOTICE:

- **Perform the test at normal operating fluid temperature (50 – 80°C or 122 – 176°F).**
- **Be sure to allow one minute interval between tests.**
- **Make three measurements and take the average value.**

MEASURE TIME LAG

(a) Fully apply the parking brake.

(b) Start the engine and check the idle speed.

Idle speed (N range): 700 ± 150 rpm

(c) Shift the shift lever from N to D position. Using a stop watch, measure the time it takes from shifting the lever until the shock is felt.

Time lag: Less than 1.2 seconds

(d) In the same manner, measure the time lag for N to R.

Time lag: Less than 1.5 seconds

EVALUATION

(a) If N → D time lag is longer than specified:

- Line pressure too low
- Forward clutch worn
- No. 2 and underdrive one-way clutch not operating properly

(b) If N → R time lag is longer than specified:

- Line pressure too low
- Direct clutch worn
- First and reverse brake worn
- Underdrive brake worn

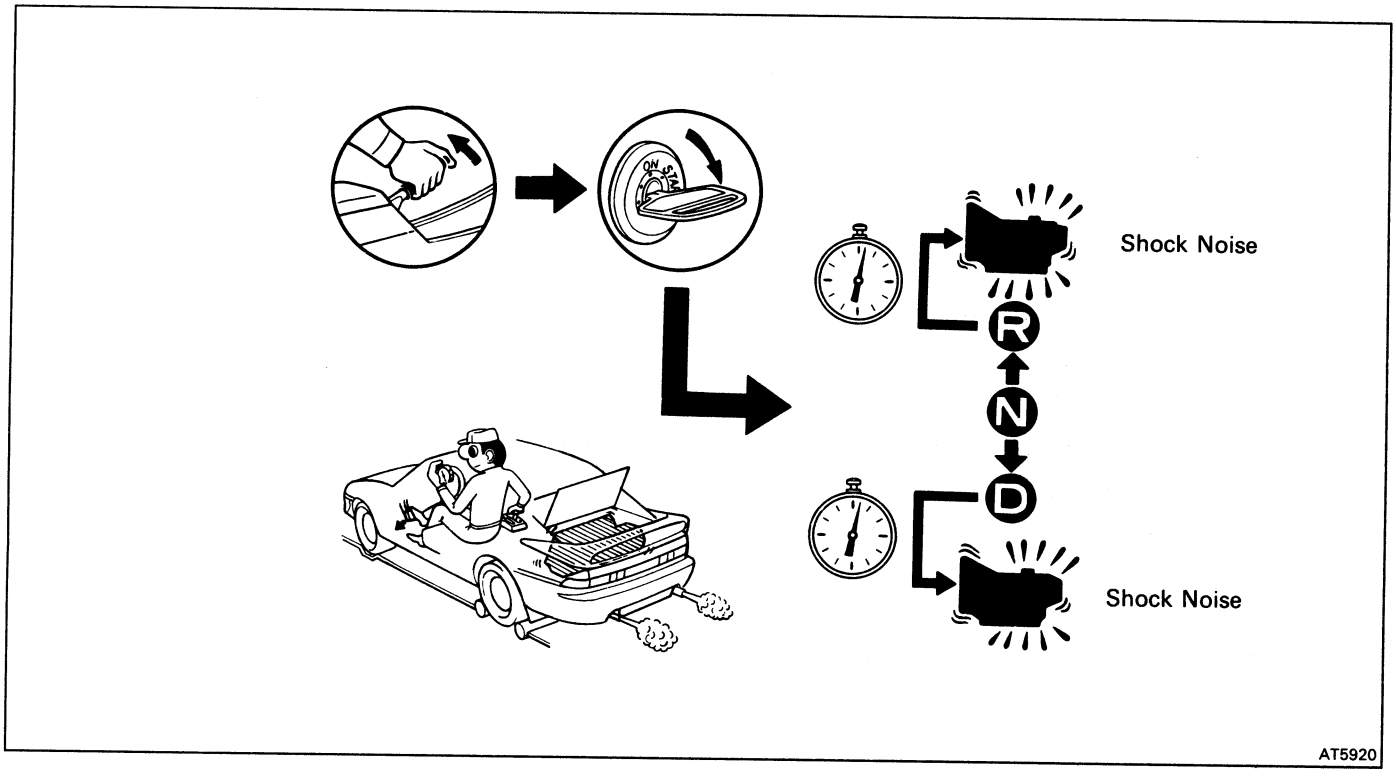

HYDRAULIC TEST

PREPARATION

(a) Warm up the transaxle fluid.

(b) Remove the transaxle case test plug and connect the hydraulic pressure gauge.

SST 09992-00094 (Oil pressure gauge)

CAUTION:

- **Perform the test at normal operating fluid temperature (50 – 80°C or 122 – 176°F).**
- **The line pressure test should always be carried out in pairs. One should observe the conditions of wheels or wheel stoppers outside the vehicle while the other is performing the test.**

MEASURE LINE PRESSURE

(a) Fully apply the parking brake and chock the front wheels.

(b) Start the engine and check idling rpm.

(c) Step down strongly on the brake pedal with your left foot an shift into D range.

(d) Measure the line pressure when the engine is idling.

(e) Press the accelerator pedal all the way down. Quickly read the highest line pressure when engine speed reaches stall speed.

(f) In the same manner, perform the test in R range.

ATM Type	Line pressure kg/cm² (psi, kPa)			
	D range		R range	
	Idling	Stall	Idling	Stall
A241E	3.8 – 4.3 (54 – 61, 373 – 422)	7.3 – 8.8 (104 – 125, 716 – 863)	6.5 – 8.1 (92 – 115, 637 – 794)	13.6 – 16.1 (193 – 229, 1,334 – 1,579)

If the measured pressures are not up to specified values, recheck the throttle cable adjustment and perform a retest.

EVALUATION

(a) If the measured values at all ranges are higher than specified:
- Throttle cable out of adjustment
- Throttle valve defective
- Regulator valve defective

(b) If the measured values at all ranges are lower than specified:
- Throttle cable out of adjustment
- Throttle valve defective
- Regulator valve defective
- Oil pump defective
- Underdrive one-way clutch not operating properly

(c) If pressure is low in the D range only:
- D range circuit fluid leakage
- Forward clutch defective
- Underdrive one-way clutch not operating properly

(d) If pressure is low in the R range only:
- R range circuit fluid leakage
- Direct clutch defective
- First and reverse brake defective
- Underdrive one-way clutch not operating properly

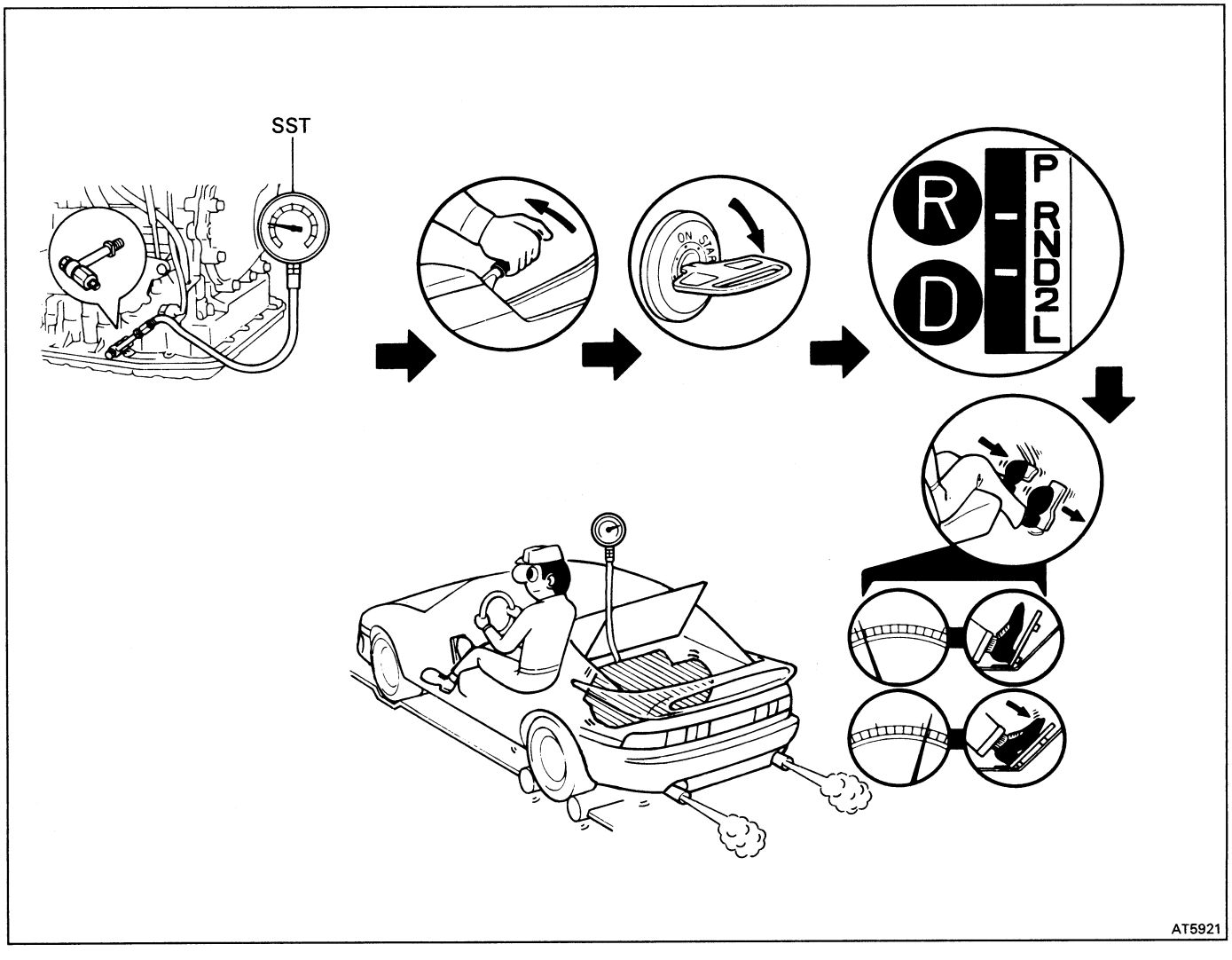

Road Test

NOTICE: Perform the test at normal operating fluid temperature (50 – 80°C or 122 – 176°F).

1. D RANGE TEST IN NORM AND PWR PATTERN RANGES

Shift into the D range and hold the accelerator pedal constant at the full throttle valve opening position.

Check the following:

(a) 1-2, 2-3 and 3-O/D up-shifts should take place, and shift points should conform to those shown in the automatic shift schedule. (See page AT-38)

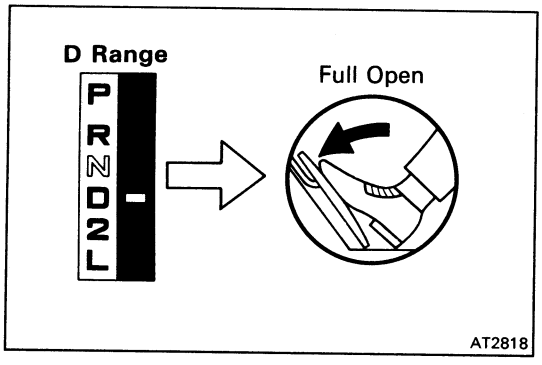

HINT:

- There is no O/D up-shift and lock-up when the coolant temp. is below 53°C (127°F).
- When the coolant temp. is below 60°C (140°F), the shift point is lower than specified in the automatic shift schedule.

EVALUATION

(1) If there is no 1 → 2 up-shift:
- No. 2 solenoid is stuck
- 1-2 shift valve is stuck

(2) If there is no 2 → 3 up-shift:
- No. 1 solenoid is stuck
- 2-3 shift valve is stuck

(3) If there is no 3 → O/D up-shift:
- 3-4 shift valve is stuck

(4) If the shift point is defective:
- Throttle valve, 1-2 shift valve, 2-3 shift valve, 3-4 shift valve etc., are defective

(5) If the lock-up is defective:
- Lock-up solenoid is stuck
- Lock-up relay valve is stuck

(b) In the same manner, check the shock and slip at the 1 → 2, 2 → 3 and 3 → O/D up-shifts.

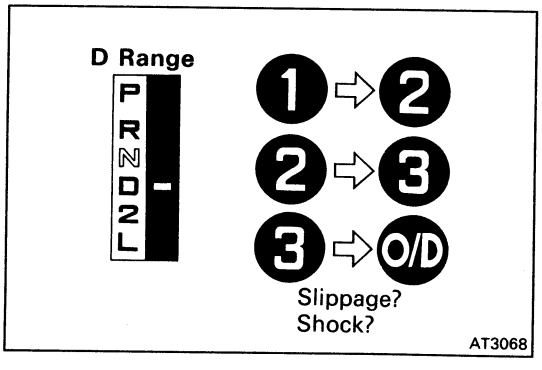

EVALUATION

If the shock is excessive:
- Line pressure is too high
- Accumulator is defective
- Check ball is defective

(c) Run at the D range lock-up or O/D gear and check for abnormal noise and vibration.

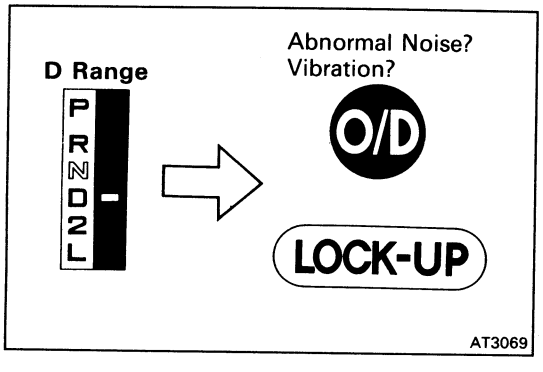

HINT: The check for the cause of abnormal noise and vibration must be made with extreme care as it could also be due to loss of balance in the drive shaft, tire torque converter, etc.

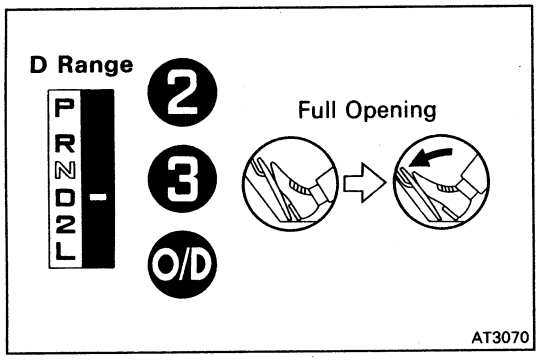

(d) While running in the D range, 2nd, 3rd and O/D gears, check to see that the possible kick-down vehicle speed limits for 2 → 1, 3 → 2 and O/D → 3 kick-downs conform to those indicated on the automatic shift schedule. (See page AT-38)

(e) Check for abnormal shock and slip at kick-down.

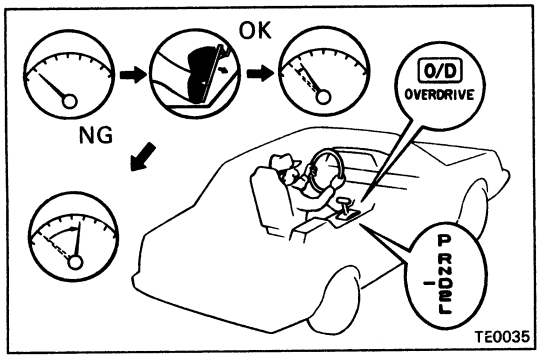

(f) Check for the lock-up mechanism.

(1) Drive in D range, O/D gear, at a steady speed (lock-up ON) of about 80 – 87 km/h (50 – 54 mph).

(2) Lightly depress the accelerator pedal and check that the engine rpm does not change abruptly.

If there is a big jump in engine rpm, there is no lock-up.

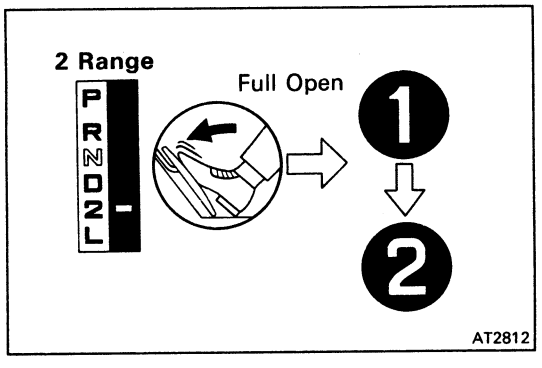

2. 2 RANGE TEST

Shift into the 2 range and, while driving with the accelerator pedal held constantly at the full throttle valve opening position, push in one of the pattern selectors and check on the following points.

(a) Check to see that the 1 → 2 up-shift takes place and that the shift point conforms to it shown on the automatic shift schedule. (See page AT-38)

HINT:

- To prevent overrun, the transmission shifts up into 3rd gear at around 112 km/h (70 mph).
- In range 2, there will be no lock-up to 2nd gear.

(b) While running in the 2 range and 2nd gear, release the accelerator pedal and check the engine braking effect.

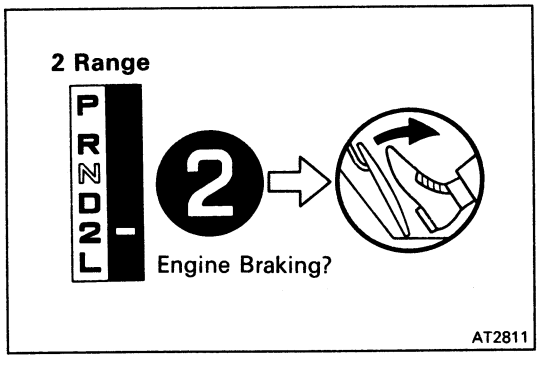

EVALUATION

If there is no engine braking effect:

- Second coast brake is defective

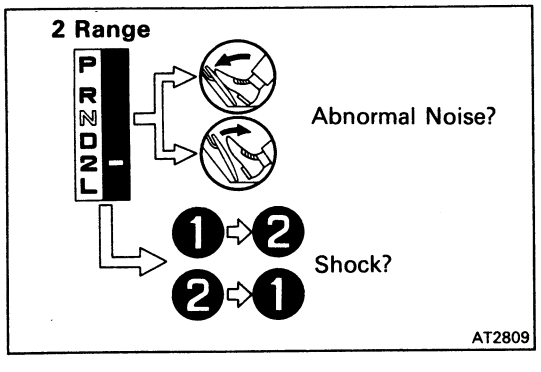

(c) Check for abnormal noise at acceleration and deceleration, and for shock at up-shift and down-shift.

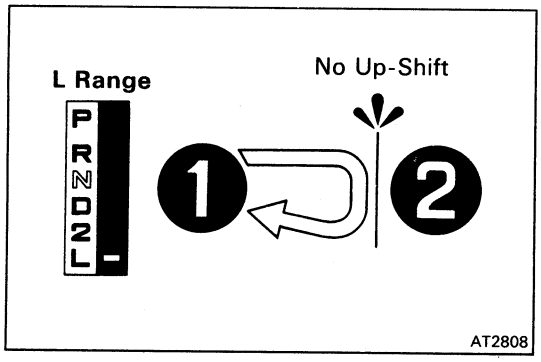

3. L RANGE TEST

(a) While running in the L range, check to see that there is no up-shift to 2nd gear.

HINT: To prevent overrun, the transmission up-shifts into 2nd gear at around 59 km/h (37 mph).

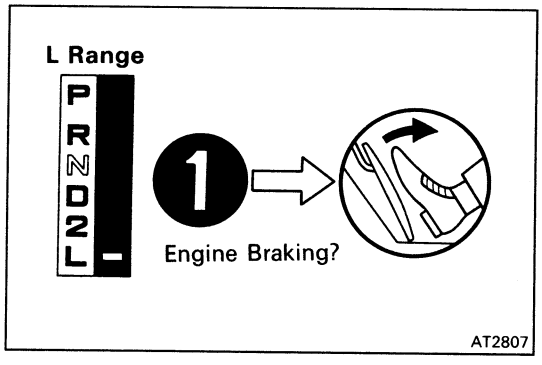

(b) While running in the L range, release the accelerator pedal and check the engine braking effect.

EVALUATION

If there is no engine braking effect:

- First and reverse brake is defective

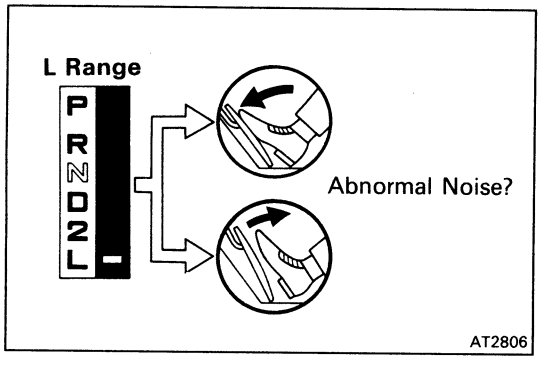

(c) Check for abnormal noise during acceleration and deceleration.

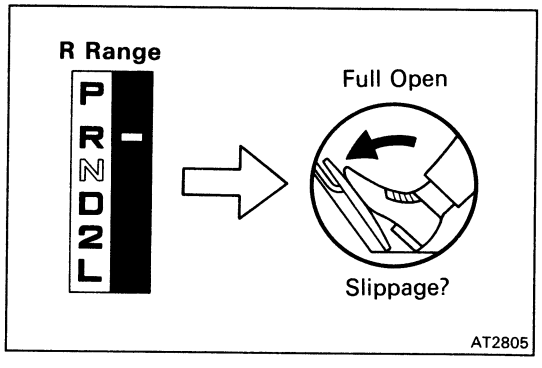

4. R RANGE TEST

Shift into R range and, while starting at full throttle, check for slipping.

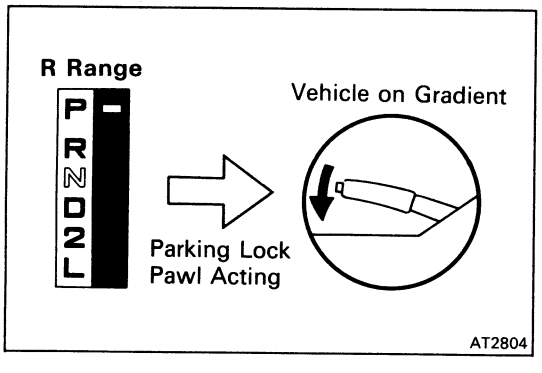

5. P RANGE TEST

Stop the vehicle on a gradient (more than 5°) and after shifting into the P range, release the parking brake.

Then check to see that the parking lock pawl holds the vehicle in place.

Automatic Shift Schedule

	Throttle valve fully open [ ] Fully closed km/h (mph)							
	1 → 2	2 → 3	3 → O/D	[3 → O/D]	[O/D → 3]	O/D → 3	3 → 2	2 → 1
D range	53 – 59 (33 – 37)	102 – 112 (63 – 70)	137 – 149 (85 – 93)	46 – 52 (29 – 32)	19 – 24 (12 – 15)	131 – 143 (81 – 89)	98 – 108 (61 – 67)	44 – 50 (27 – 31)
2 range	53 – 59 (33 – 37)	—	—	—	—	—	—	44 – 50 (27 – 31)
L range	—	—	—	—	—	—	—	34 – 40 (21 – 25)

	Throttle valve opening 5 % km/h (mph)	
	Lock-up ON	Lock-up OFF
	O/D	O/D
D range	80 – 87 (50 – 54)	74 – 80 (46 – 50)

HINT:

(1) In the 2 and L ranges, all stages lock-up is OFF.

(2) In the following cases, the lock-up will be released regardless of the lock-up pattern.

- When the throttle is completely closed.
- When the brake switch is ON.

(3) Shift up to O/D will not occur when the engine coolant temp. is below 53°C (127°F).

ON-VEHICLE REPAIR

CAUTION: Work must be started after approx. 20 seconds or longer from the time the ignition switch is turned to the "LOCK" position and the negative (–) terminal cable is disconnected from the battery.

HINT: The components mentioned below can be replaced on the vehicle without any necessity for removal of the transmission. For the respective operating procedures refer to the following pages:

Components	Removal	Installation	Remarks
Valve body	AT-49 to AT-51	AT-157 to AT-160	
Throttle cable	AT-39	AT-39 and AT-40	

THROTTLE CABLE

REPLACEMENT OF THROTTLE CABLE

1. **DISCONNECT THROTTLE CABLE FROM ENGINE**
2. **REMOVE NEUTRAL START SWITCH**
   (See page AT-47)
3. **REMOVE THROTTLE CABLE RETAINING PLATE**
   (See page AT-47)
4. **REMOVE VALVE BODY**
   (See pages AT-49 to AT-51)
5. **REMOVE THROTTLE CABLE FROM CASE**
   (See page AT-51)
6. **INSTALL THROTTLE CABLE IN CASE**
   (See page AT-157)
7. **INSTALL VALVE BODY**
   (See pages AT-157 to AT-160)
8. **IF THROTTLE CABLE IS NEW, STAKE STOPPER ON INNER CABLE**
   (a) Bend the cable so there is a radius of about 200 mm (7.87 in.).

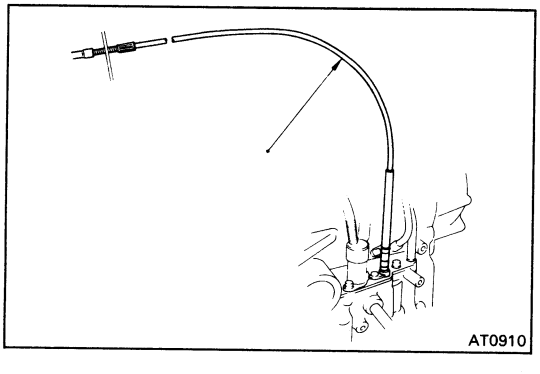

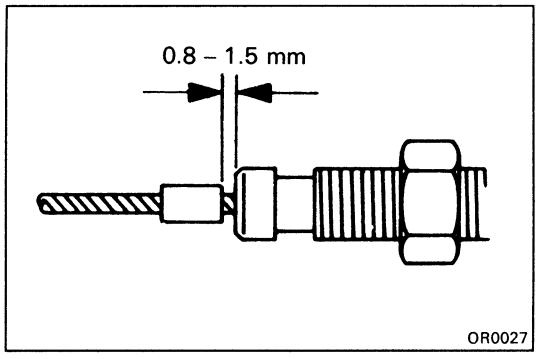

(b) Pull the inner cable lightly until a slight resistance is felt, and hold it.

(c) Stake the stopper 0.8 – 1.5 mm (0.031 – 0.059 in.) from the surface of outer cable as shown.

9. **INSTALL THROTTLE CABLE RETAINING PLATE**
(See page AT-161)

10. **INSTALL NEUTRAL START SWITCH**
(See page AT-161)

11. **CONNECT THROTTLE CABLE TO ENGINE**

12. **ADJUST THROTTLE CABLE**
(See page AT-13)

REMOVAL AND INSTALLATION OF TRANSAXLE

Remove and install the parts as shown.

CAUTION: Work must be started after approx. 20 seconds or longer from the time the ignition switch is turned to the "LOCK" position and the negative (–) terminal cable is disconnected from the battery.

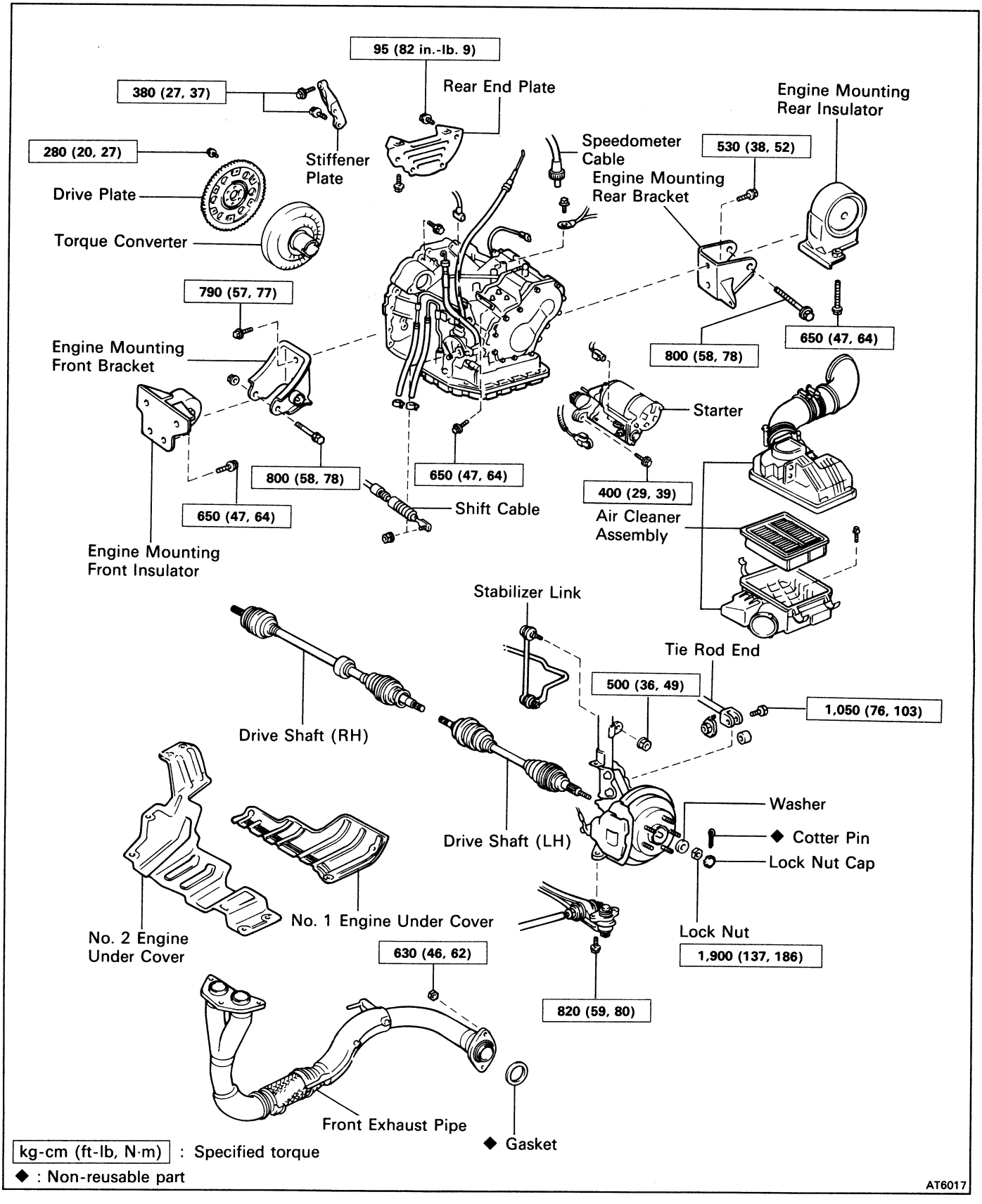

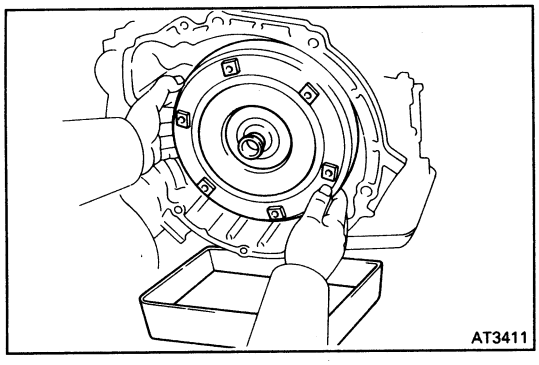

(MAIN POINT OF INSTALLATION)

1. INSTALL TORQUE CONVERTER IN TRANSAXLE

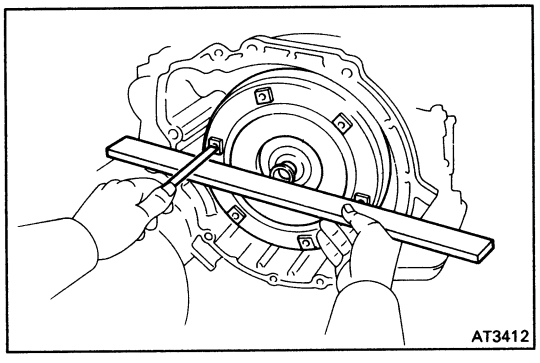

2. CHECK TORQUE CONVERTER INSTALLATION

Using a scale and a straight edge, measure from the installed surface to the front surface of the transaxle housing.

Correct distance: 13 mm (0.51 in.) or more

3. INSTALL TORQUE CONVERTER MOUNTING BOLTS

(a) Clean the threads of the bolts with the gasoline.

(b) Coat the threads of the bolts with sealer.

Sealer: Part No.08833-00070, THREE BOND 1324 or equivalent.

(c) Tighten the bolts evenly.

Torque: 280 kg-cm (20 ft-lb, 27 N·m)

TORQUE CONVERTER

CLEAN TORQUE CONVERTER

If the transmission is contaminated, the torque converter and transmission cooler should be thoroughly flushed with ATF.

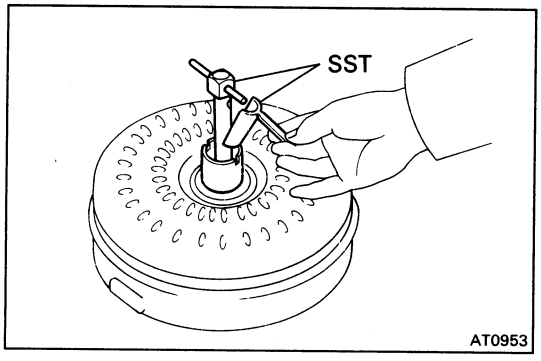

INSPECTION OF TORQUE CONVERTER

1. INSERT SST IN END OF TORQUE CONVERTER

(a) Insert a turning tool in the inner race of the one-way clutch.

(b) Install the stopper so that it fits in the notch of the converter hub and outer race of the one-way clutch.

SST 09350-32014 (09351-32010, 09351-32020)

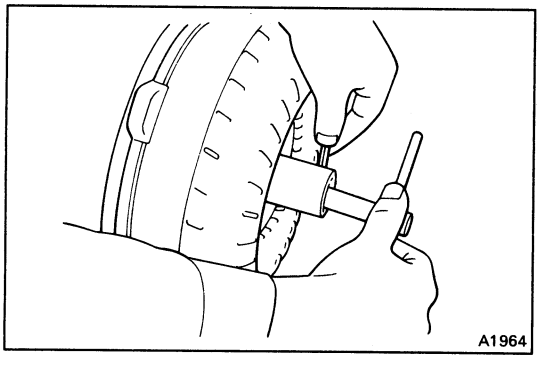

2. TEST ONE-WAY CLUTCH

With the torque converter standing on its side, the clutch should lock when turned counterclockwise, and rotate freely and smoothly clockwise.

If necessary, clean the converter and retest the clutch. Replace the converter if the clutch still fails the test.

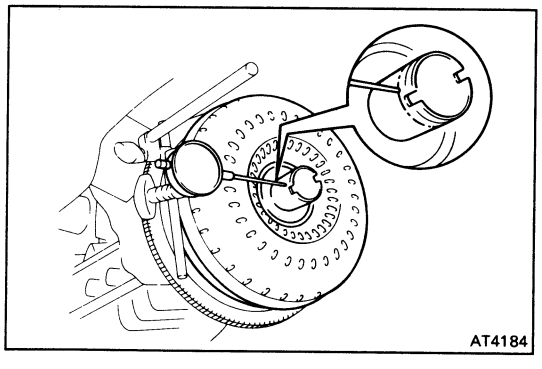

3. MEASURE TORQUE CONVERTER SLEEVE RUNOUT

(a) Temporarily mount the torque converter to the drive plate. Set up a dial indicator.

Torque: 280 kg-cm (20 ft-lb, 27 N·m)
Runout: 0.30 mm (0.0118 in.)

If runout exceeds 0.30 mm (0.0118 in.), try to correct it by reorienting the installation of the converter. If excessive runout cannot be corrected, replace the torque converter.

HINT: Mark the position of the converter to ensure correct installation.

(b) Remove the torque converter.

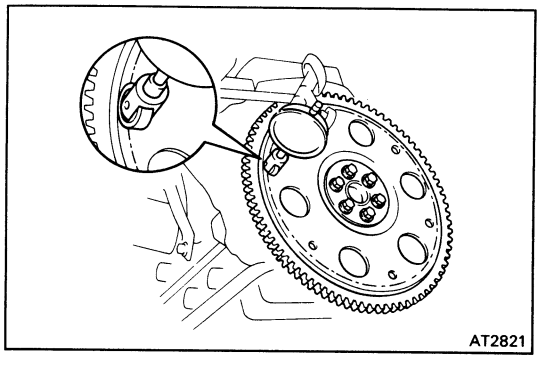

4. MEASURE DRIVE PLATE RUNOUT AND INSPECT RING GEAR

Set up a dial indicator and measure the drive plate runout.

If runout exceeds 0.20 mm (0.0079 in.) or if the ring gear is damaged, replace the drive plate. If installing a new drive plate, note the orientation of the spacers and tighten the bolts.

Torque: 850 kg-cm (61 ft-lb, 83 N·m)
Runout: 0.20 mm (0.0079 in.)

REMOVAL OF COMPONENT PARTS

COMPONENTS

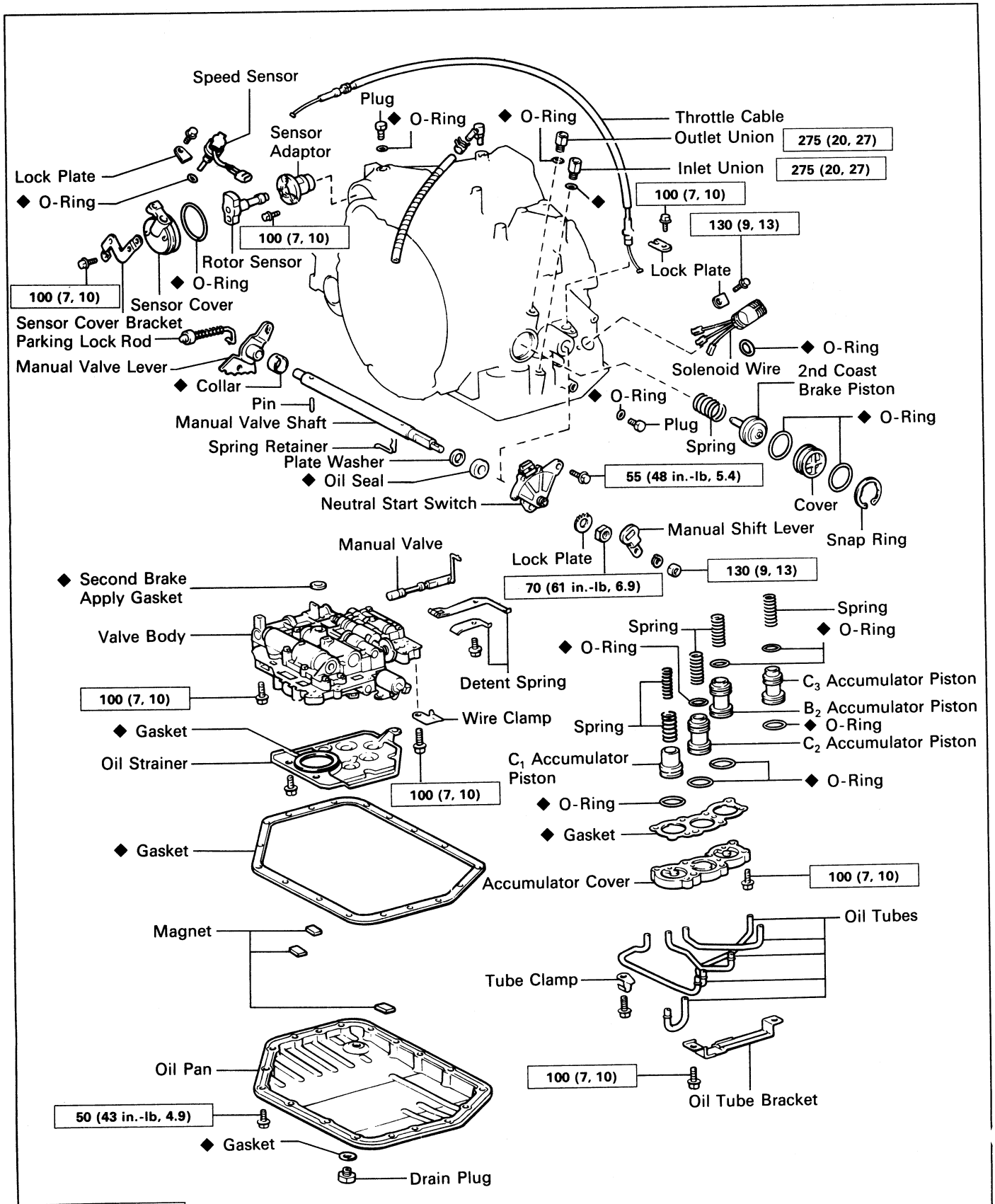

kg-cm (ft-lb, N·m) : Specified torque

◆ Non-reusable part

AT6007

COMPONENTS (Cont'd)

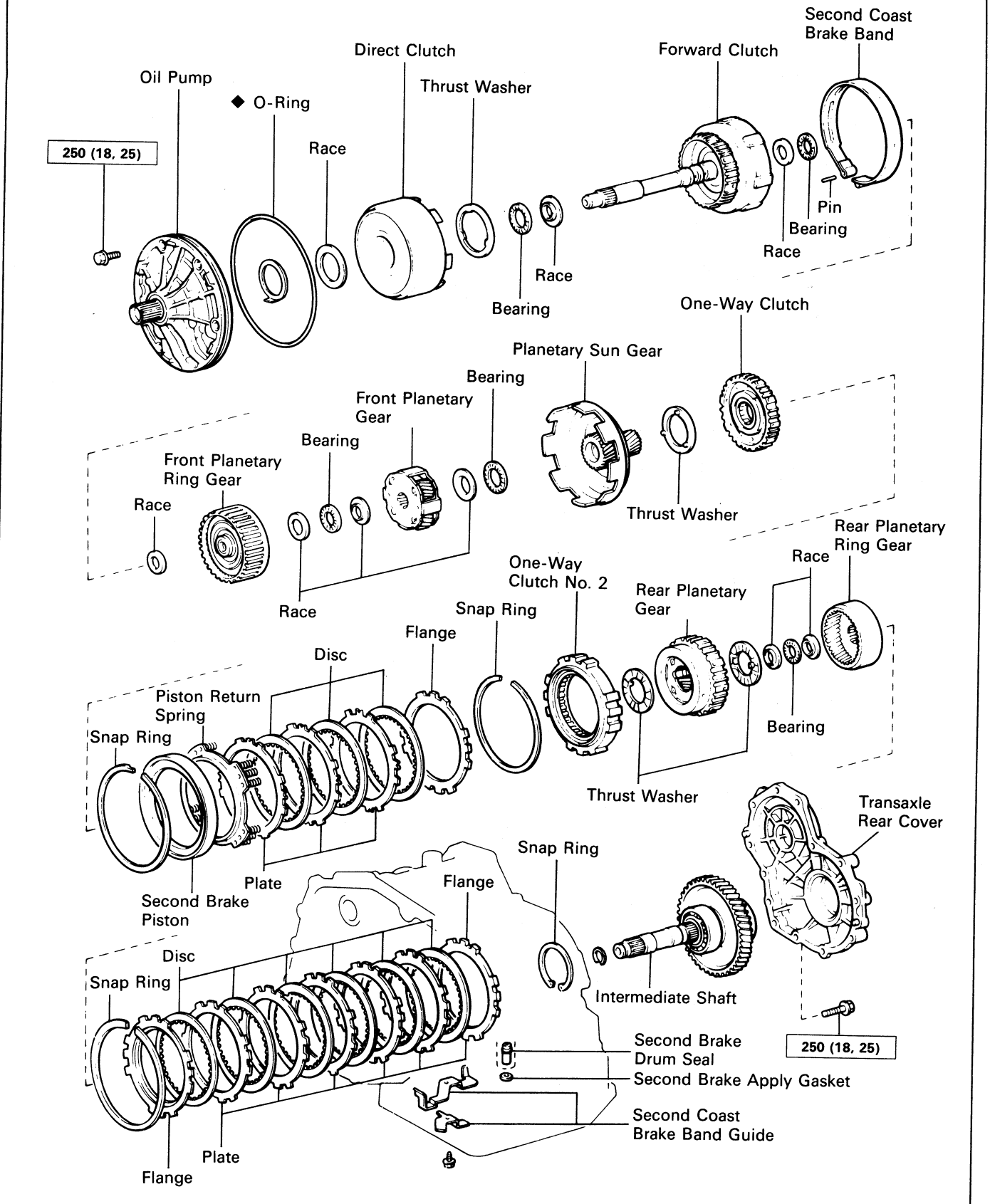

kg-cm (ft-lb, N·m) : Specified torque

◆ Non-reusable part

AT3368

COMPONENTS (Cont'd)

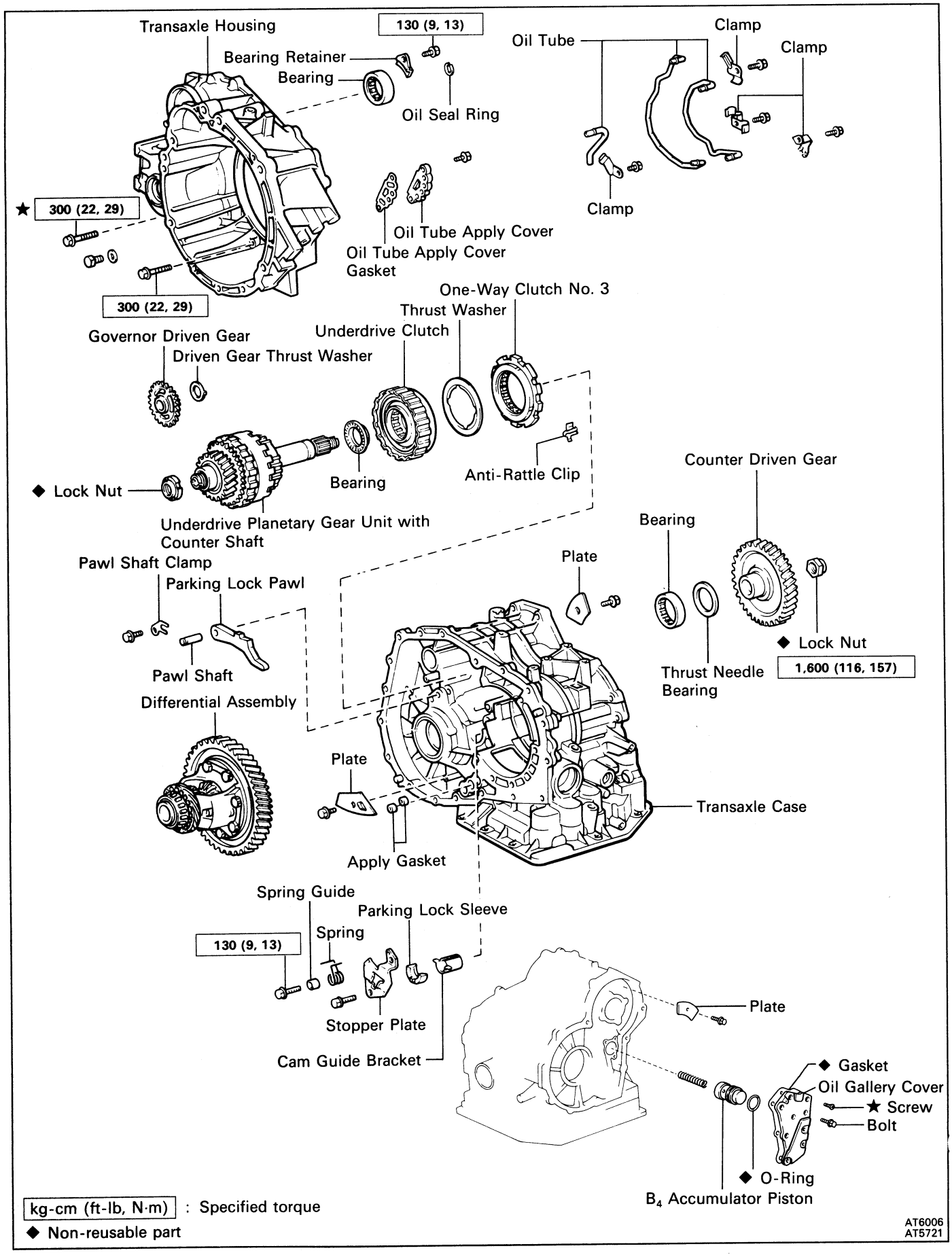

kg-cm (ft-lb, N·m) : Specified torque

◆ Non-reusable part

AT6006
AT5721

SEPARATE BASIC SUBASSEMBLY

1. **REMOVE TWO OIL COOLER PIPES**

2. **REMOVE TRANSMISSION DIPSTICK AND FILLER TUBE**

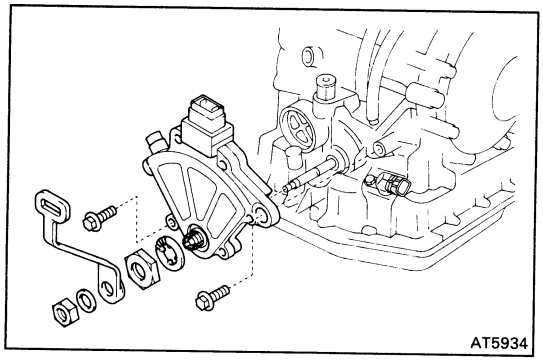

3. **REMOVE NEUTRAL START SWITCH**
   (a) Remove the manual shift lever.
   (b) Pry off the lock washer and remove the manual valve shaft nut.
   (c) Remove the two bolts and pull out the neutral start switch.

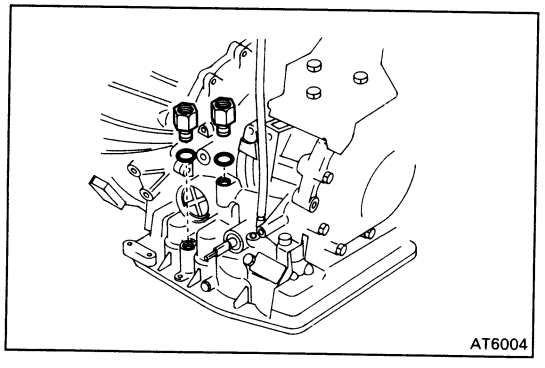

4. **REMOVE UNION**
   (a) Using the open end wrench, remove the union.
   (b) Remove the O-ring from union.

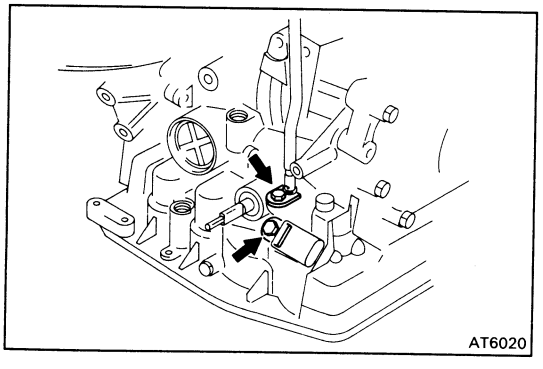

5. **REMOVE THROTTLE CABLE RETAINING BOLT AND PLATE**

6. **REMOVE SOLENOID WIRE RETAINING BOLT AND PLATE**

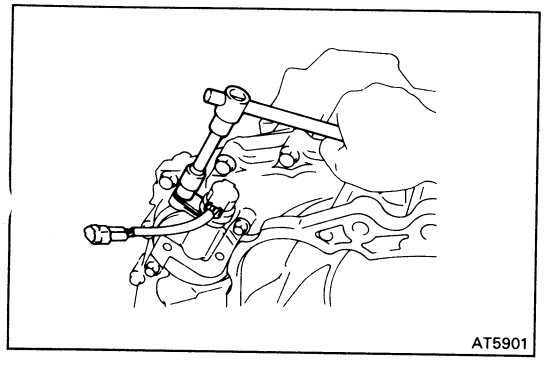

7. **REMOVE SPEED SENSOR AND SENSOR ROTOR**
   (a) Remove the retaining plate and pull out the speed sensor.
   (b) Remove the O-ring from speed sensor.

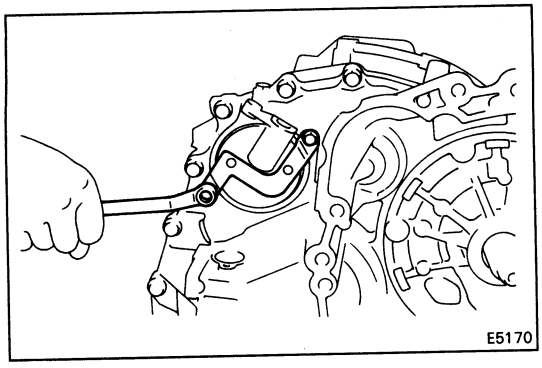

(c) Remove the two bolts and sensor cover bracket.

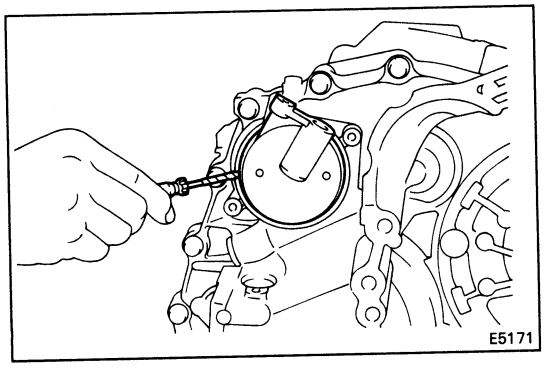

(d) Using a screwdriver, remove the sensor cover.

HINT: Tape the screwdriver tip before use so as not to damage the cover or transaxle.

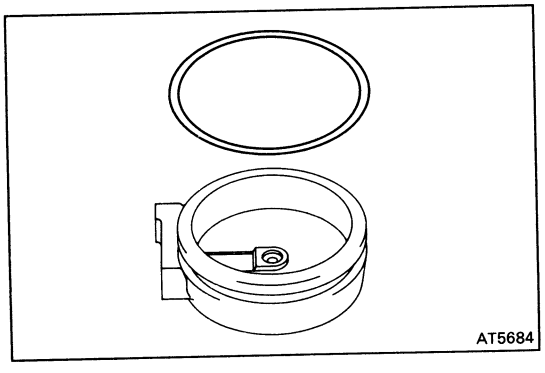

(e) Remove the O-ring from the sensor cover.

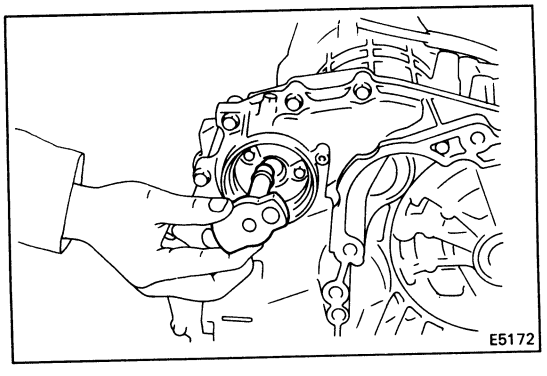

(f) Remove the sensor rotor.

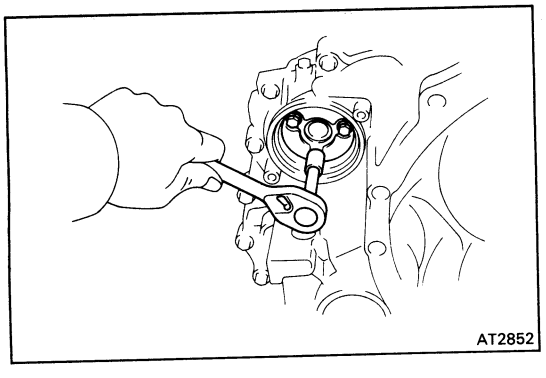

(g) Remove the three bolts and sensor adaptor.

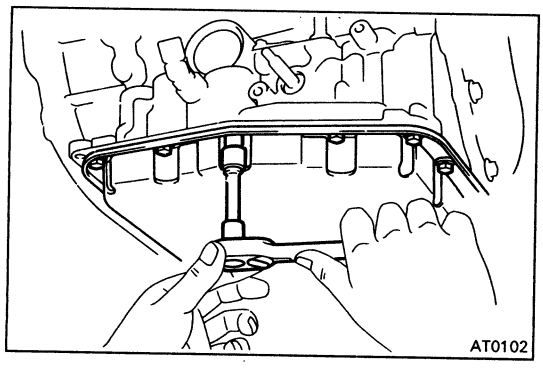

8. REMOVE PAN AND GASKET

(a) Remove the eighteen bolts.

(b) Remove the pan by lifting the transmission case.

NOTICE: Do not turn the transmission over as it will contaminate the valve body with the foreign materials in the bottom of the pan.

(c) Remove the gasket.

(d) Place the transmission on wooden blocks to prevent damage to the pipes.

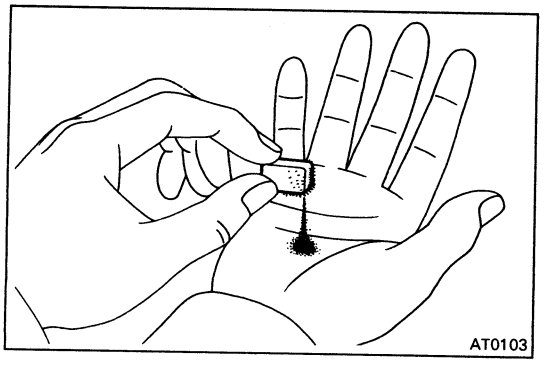

9. EXAMINE PARTICLES IN PAN

Remove the magnets and use them to collect any steel chips. Lock carefully at the chips and particles in the pan and on the magnet to anticipate what type of wear you will find in the transmission:

Steel (magnetic) .. bearing, gear and plate wear
Brass (non-magnetic) .. bushing wear

10. TURN TRANSMISSION OVER

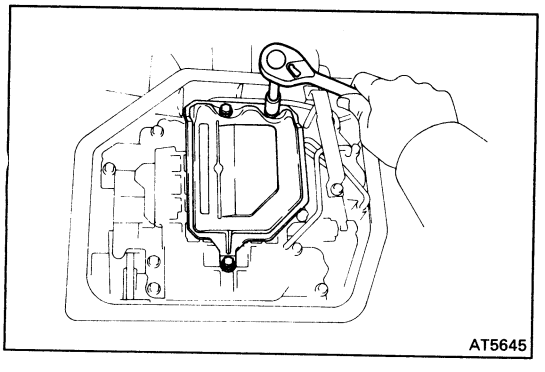

11. REMOVE OIL STRAINER

(a) Remove the three bolts and oil strainer.

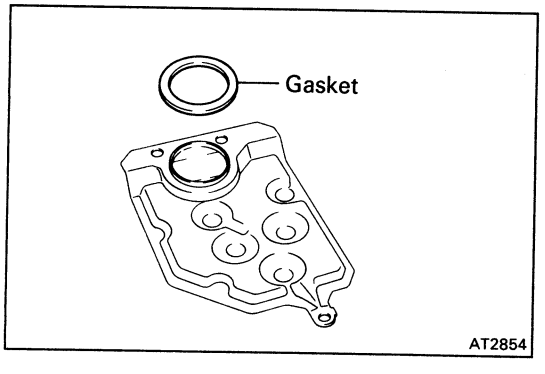

(b) Remove the gasket.

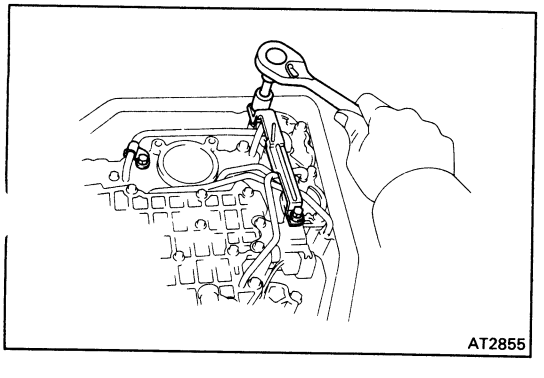

12. REMOVE OIL TUBES

(a) Remove the two bolts and tube bracket.

(b) Remove the tube clamp bolt and clamp.

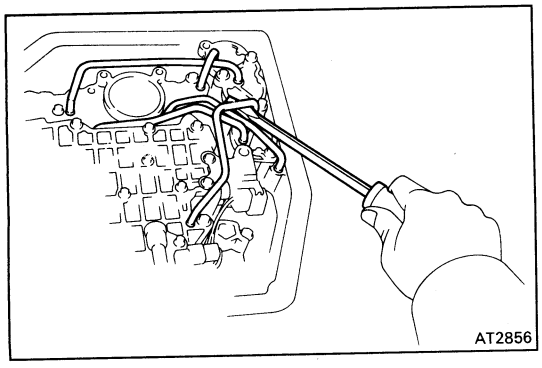

(c) Pry up both ends with a large screwdriver and remove the five tubes.

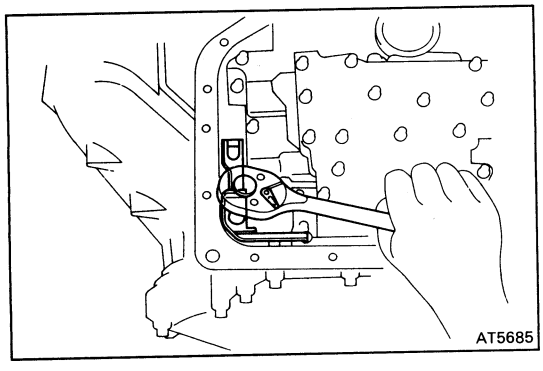

13. REMOVE MANUAL DETENT SPRING

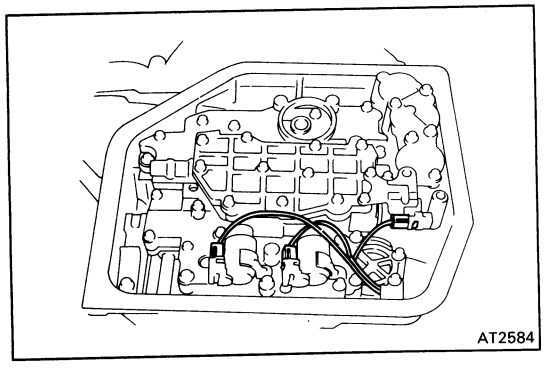

14. DISCONNECT SOLENOID CONNECTORS

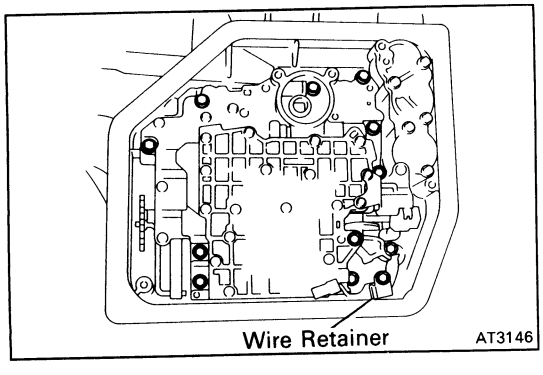

15. REMOVE VALVE BODY

(a) Remove the twelve bolts and wire retainer as shown.

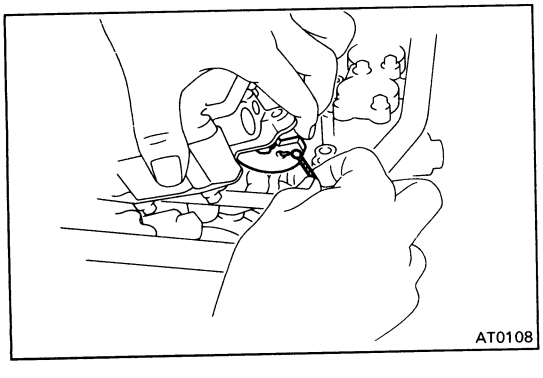

(b) Disconnect the throttle cable from the cam.

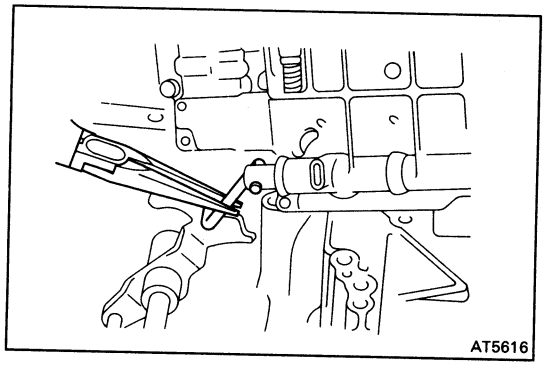

(c) While disconnecting the manual valve connecting rod from the manual valve lever, remove the valve body.

(d) Remove the manual valve from the valve body.

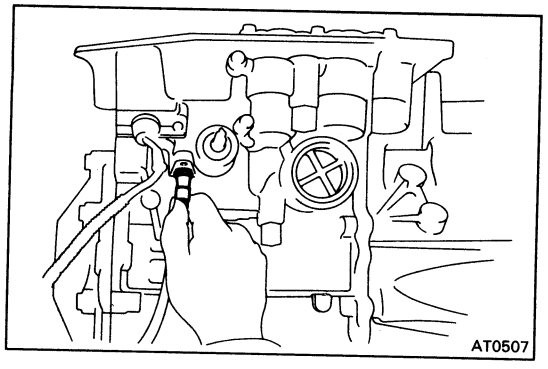

16. REMOVE THROTTLE CABLE FROM CASE

Pull out the throttle cable.

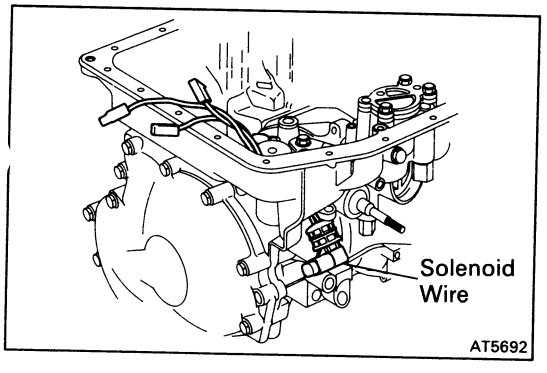

17. REMOVE SOLENOID WIRE

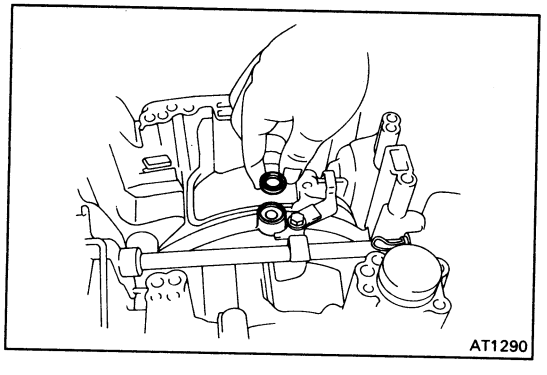

18. REMOVE SECOND BRAKE APPLY GASKET

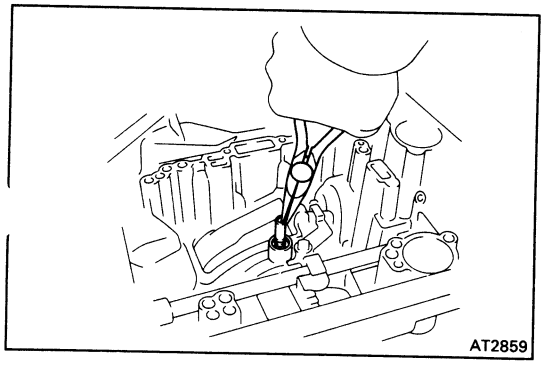

19. REMOVE SECOND BRAKE DRUM SEAL

Using a needle nose pliers, pull out the second brake drum seal.

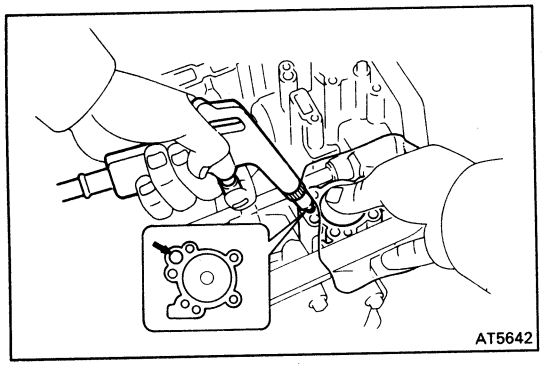

20. REMOVE C_3 ACCUMULATOR PISTON AND SPRING

Using low-pressure compressed air (1 kg/cm², 14 psi or 98 kPa) pop out the piston into a rag. Force air into the hole shown and remove the piston and spring.

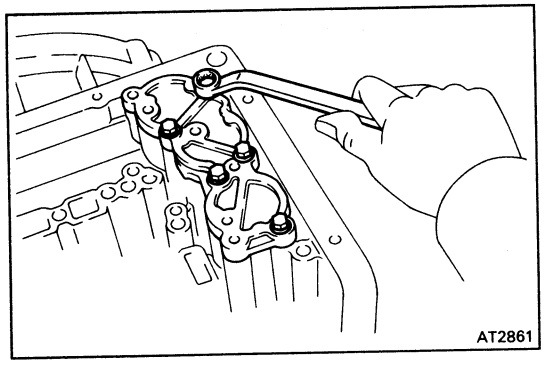

21. REMOVE ACCUMULATOR PISTONS AND SPRINGS

(a) Loosen the five bolts one turn at a time until the spring tension is released.

(b) Remove the cover and gasket.

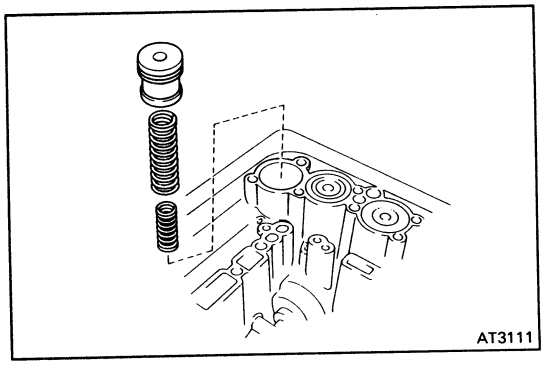

(c) Remove the C_1 piston and two springs.

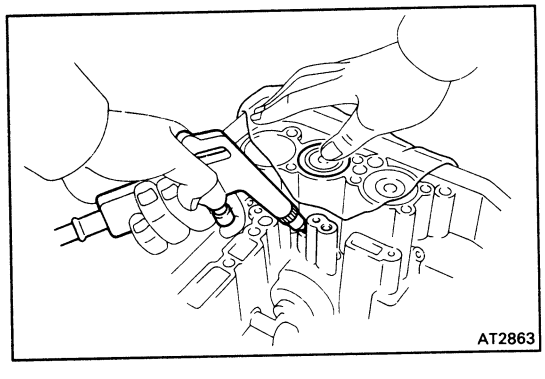

(d) Using low-pressure compressed air (1 kg/cm², 14 psi, 98 kPa), pop out the C_2 piston into a rag. Force air into the hole shown and remove the piston and spring.

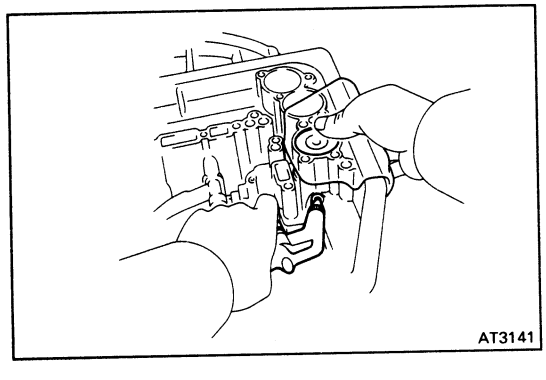

(e) Using low-pressure compressed air (1 kg/cm², 14 psi, 98 kPa), pop out the B_2 piston into a rag. Force air into the hole shown and remove the piston and spring.

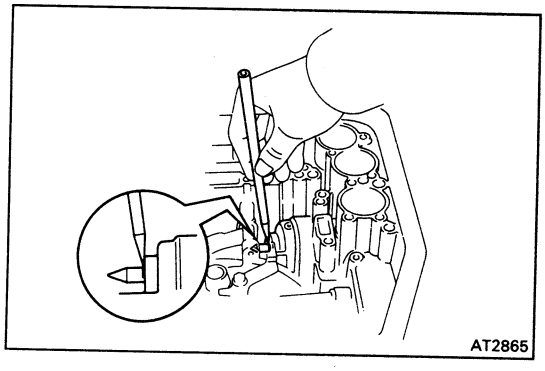

22. MEASURE PISTON STROKE OF SECOND COAST BRAKE

(a) Apply a small amount of paint to the piston rod at the point it meets the case as shown in the illustration.

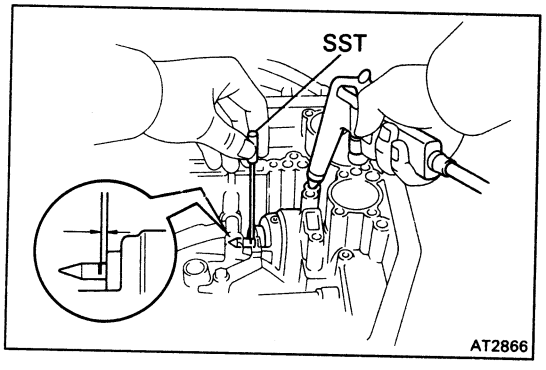

(b) Using SST, measure the piston stroke applying and releasing the compressed air (4 – 8 kg/cm², 57 – 114 psi, 392 – 785 kPa) as shown.

SST 09240-00020

Piston stroke: 1.5 – 3.0 mm (0.059 – 0.118 in.)

If the piston stroke exceeds the limit, inspect the brake band.

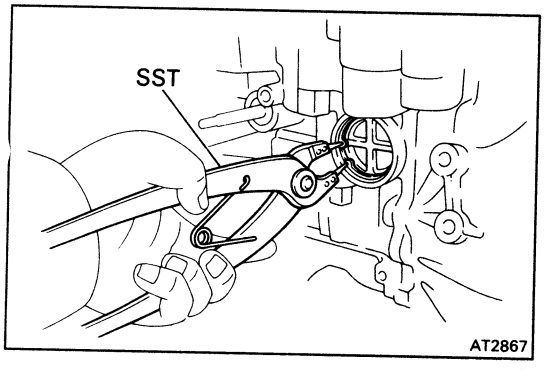

23. REMOVE SECOND COAST BRAKE PISTON

(a) Using SST, remove the snap ring.

SST 09350-32014 (09351-32050)

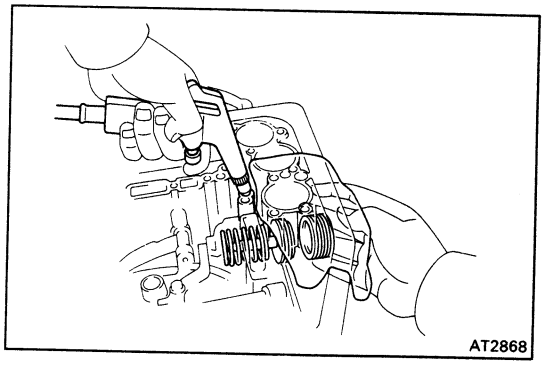

(b) Using low-pressure compressed air (1 kg/cm², 14 psi, 98 kPa), pop out the cover into a rag. Force air into the hole shown.

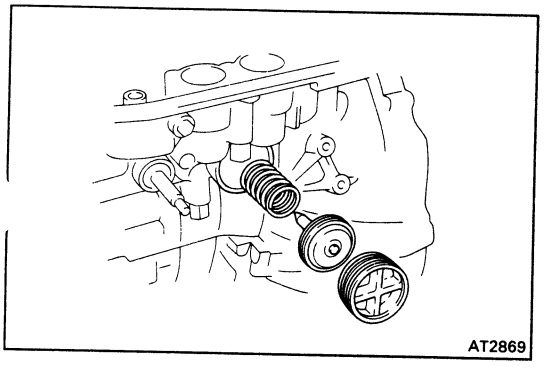

(c) Remove the cover, piston and spring.

(d) Remove the two O-rings from the cover.

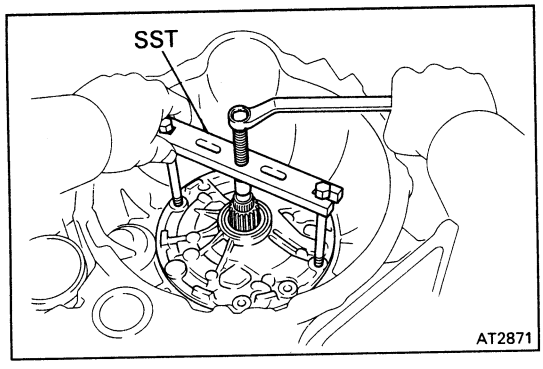

24. REMOVE OIL PUMP

(a) Remove the six bolts holding the oil pump to the transmission case.

(b) Using SST, pull the oil pump free from the transmission case.

SST 09350-32014 (09351-32061)

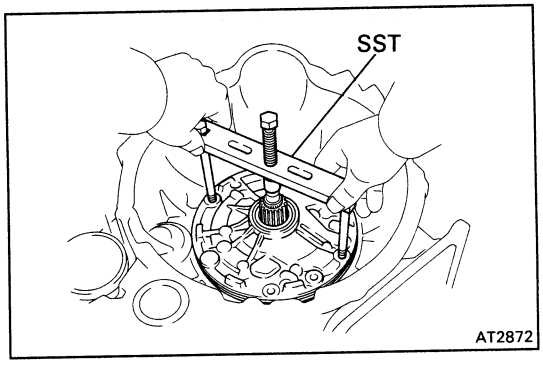

(c) Remove the oil pump with SST.

SST 09350-32014 (09351-32061)

NOTICE: Be careful not to drop or damage the races and bearing behind oil pump.

(d) Remove SST from the oil pump.

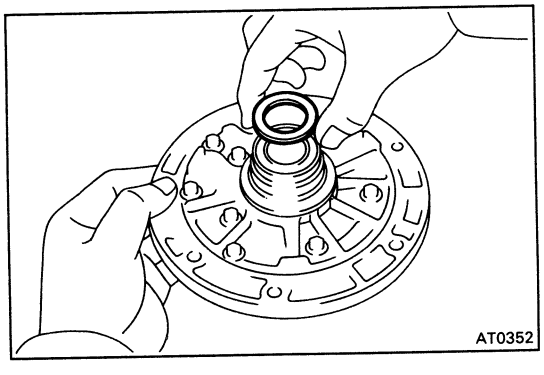

(e) Remove the race from the oil pump.

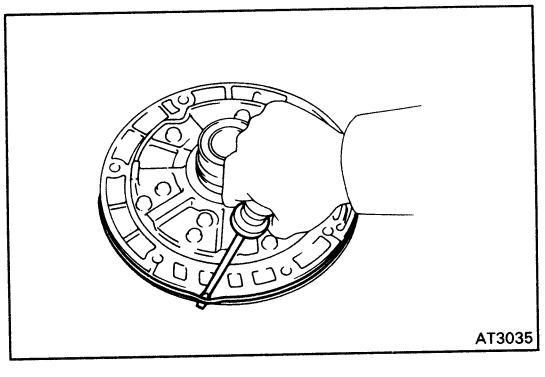

(f) Remove the O-ring from the oil pump.

25. REMOVE DIRECT CLUTCH

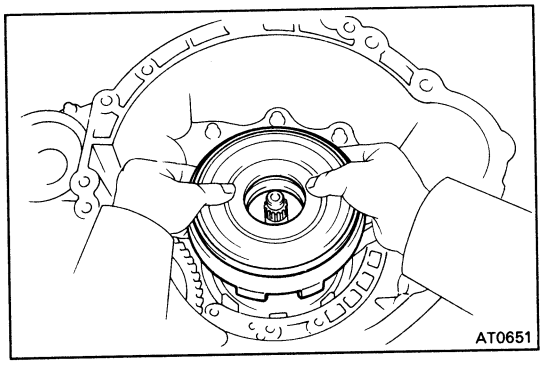

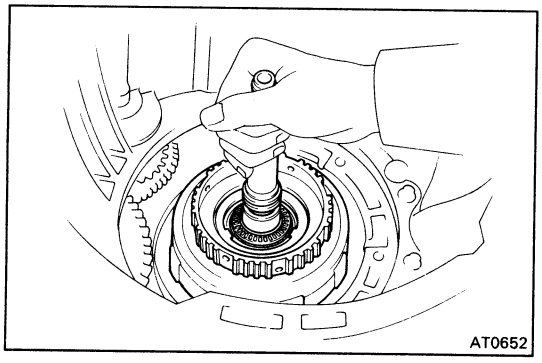
AT0652

26. REMOVE FORWARD CLUTCH

(a) Remove the forward clutch with bearing and race.

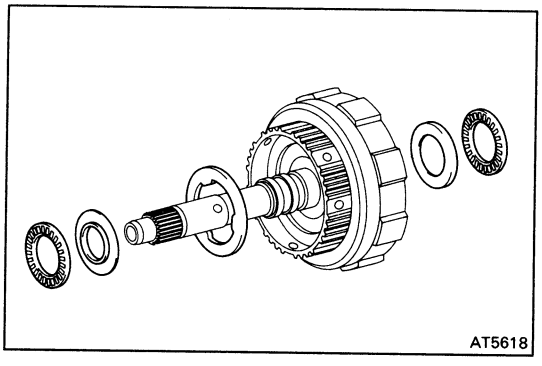
AT5618

(b) Remove the thrust washer, bearings and races from the forward clutch.

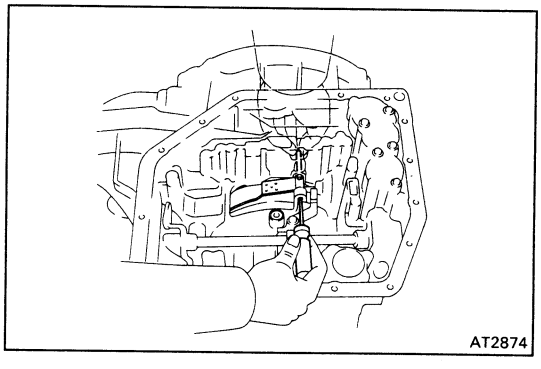
AT2874

27. REMOVE SECOND COAST BRAKE BAND

(a) Push the pin with a small screwdriver and remove it from the bolt hole of the oil pump mounting.

(b) Remove the brake band.

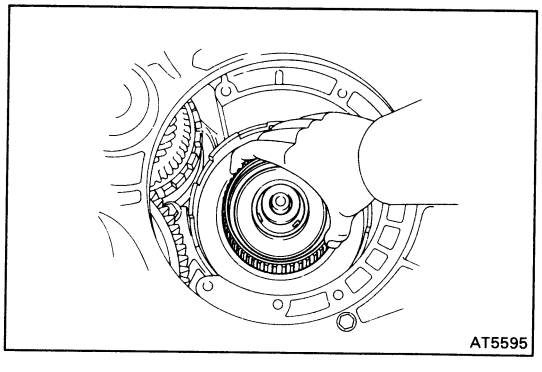
AT5595

28. REMOVE FRONT PLANETARY RING GEAR

(a) Remove the front planetary ring gear with race.

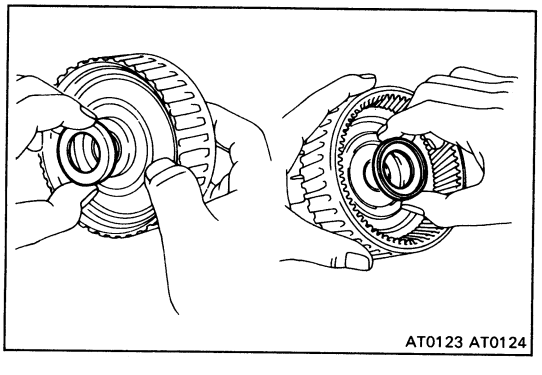
AT0123 AT0124

(b) Remove the races from the ring gear.

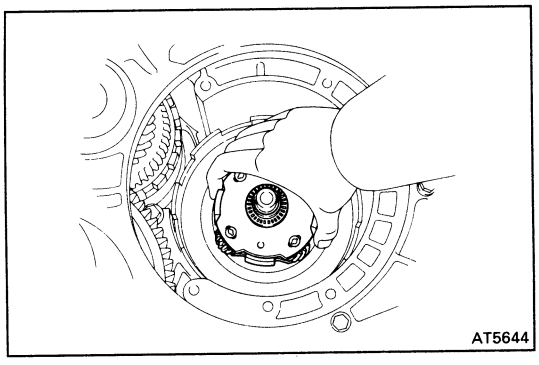

29. REMOVE FRONT PLANETARY GEAR

(a) Remove the front planetary gear with bearing and race.

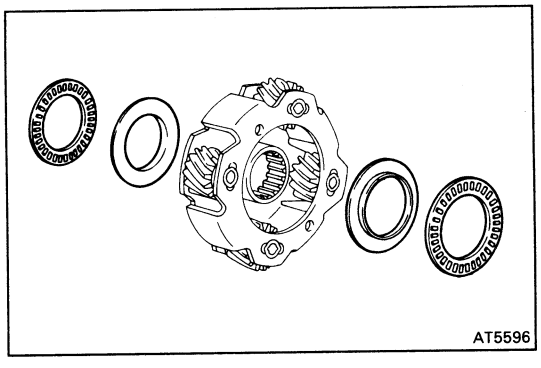

(b) Remove the races and bearings from the planetary gear.

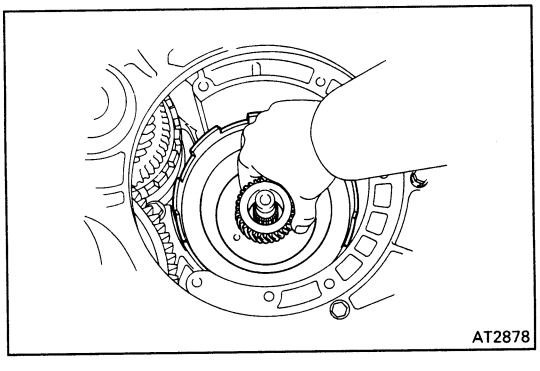

30. REMOVE SUN GEAR, SUN GEAR INPUT DRUM AND THRUST WASHER

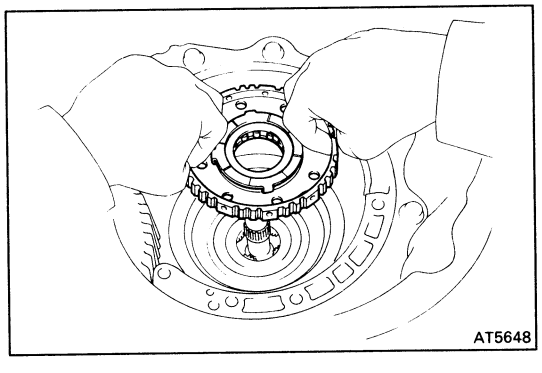

31. REMOVE SECOND BRAKE HUB AND NO. 1 ONE-WAY CLUTCH

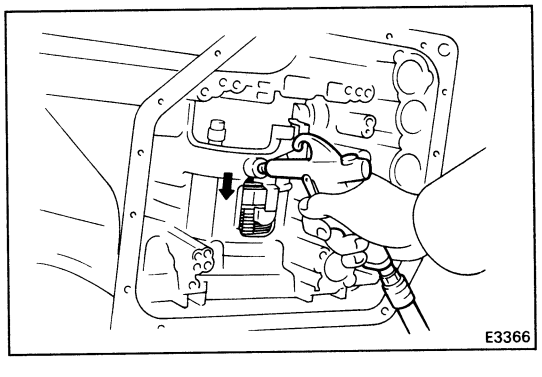

32. CONFIRM THAT SECOND BRAKE PISTON MOVES

Using compressed air, confirm that the second brake piston moves smoothly.

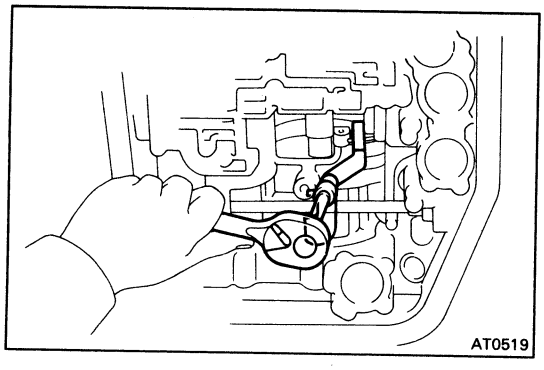

33. REMOVE SECOND COAST BRAKE BAND GUIDE

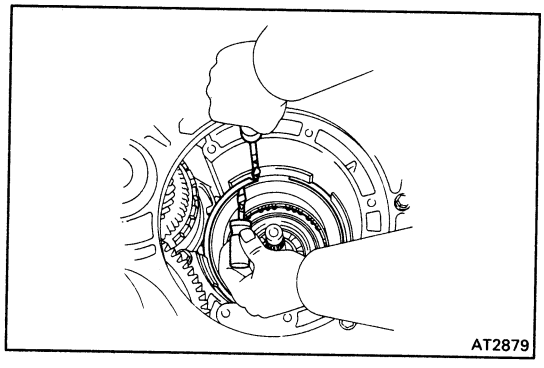

34. REMOVE SNAP RING HOLDING SECOND BRAKE DRUM TO CASE

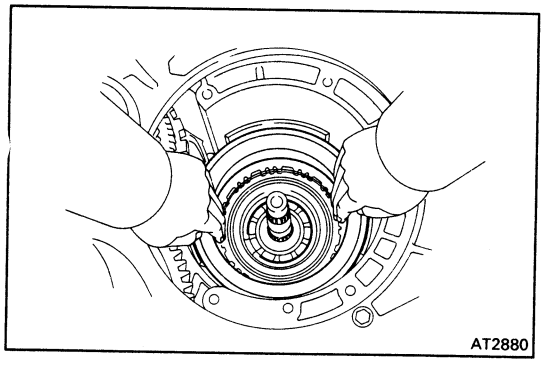

35. REMOVE SECOND BRAKE DRUM

HINT: If the brake drum is difficult to remove, lightly tap it with a wooden block.

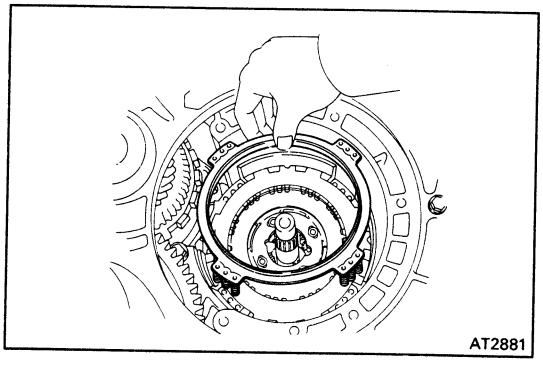

36. REMOVE SECOND BRAKE PISTON RETURN SPRING

(a) Remove the thrust washer.

(b) Remove the return spring.

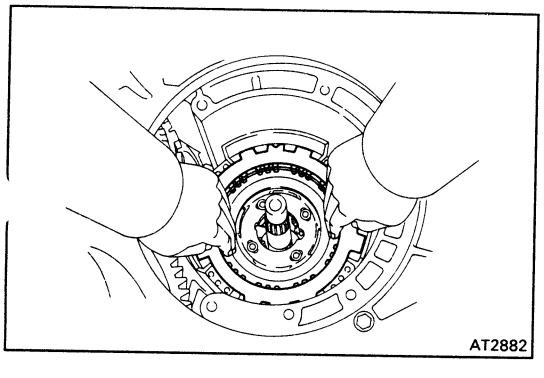

37. REMOVE PLATES, DISCS AND FLANGE

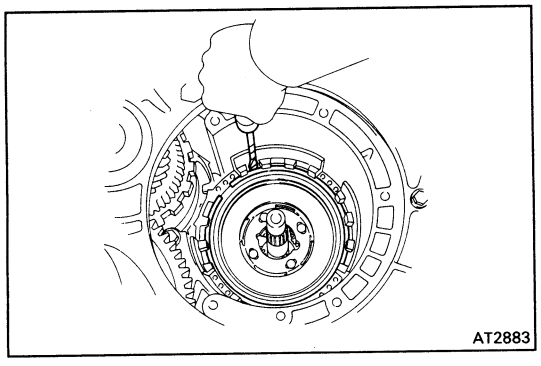

38. REMOVE SNAP RING HOLDING NO. 2 ONE-WAY CLUTCH OUTER RACE TO CASE

Using a screwdriver, remove the snap ring.

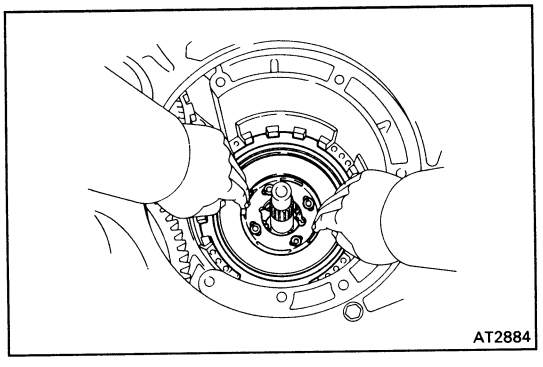

39. REMOVE NO. 2 ONE-WAY CLUTCH AND REAR PLANETARY GEAR

(a) Remove the No. 2 one-way clutch and rear planetary gear with thrust washer.

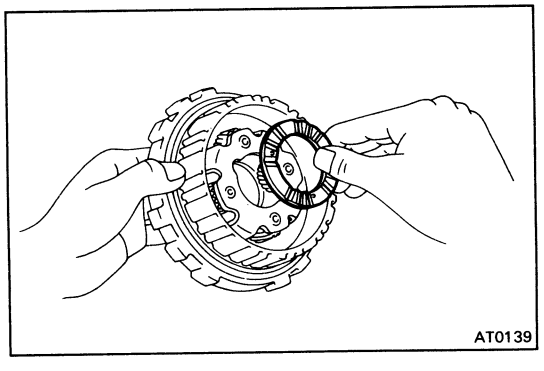

(b) Remove the thrust washer from the gear.

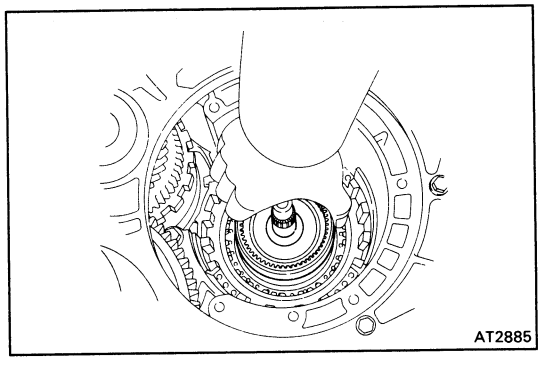

40. REMOVE REAR PLANETARY RING GEAR

(a) Remove the rear planetary ring gear with bearing and races.

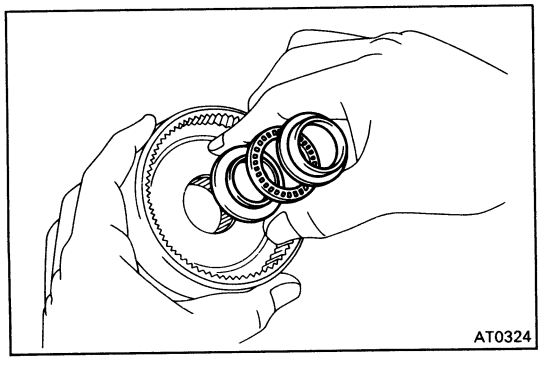

(b) Remove the bearing and races from the ring gear.

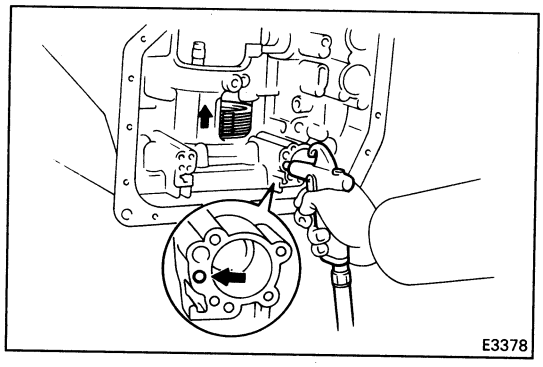

41. CONFIRM THAT FIRST AND REVERSE BRAKE PISTON MOVES

Using compressed air, confirm that the first and reverse brake piston moves smoothly.

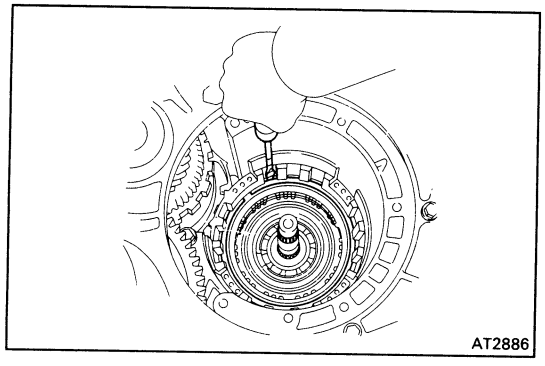

42. REMOVE SNAP RING HOLDING FLANGE TO CASE

Using a screwdriver, remove the snap ring.

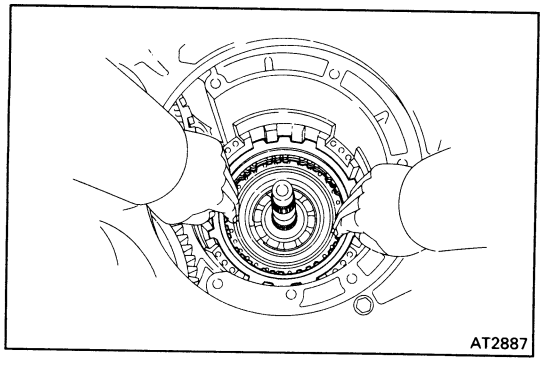

43. REMOVE FLANGES, PLATES AND DISCS

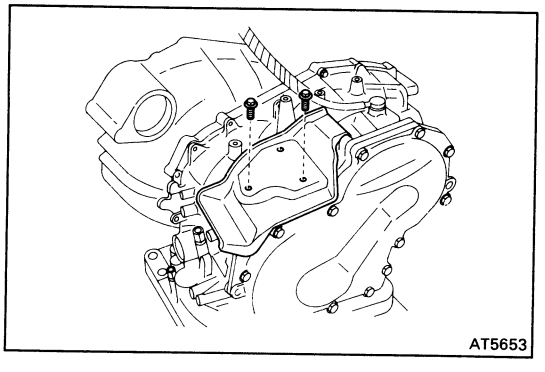

44. REMOVE ENGINE MOUNTING LEFT BRACKET

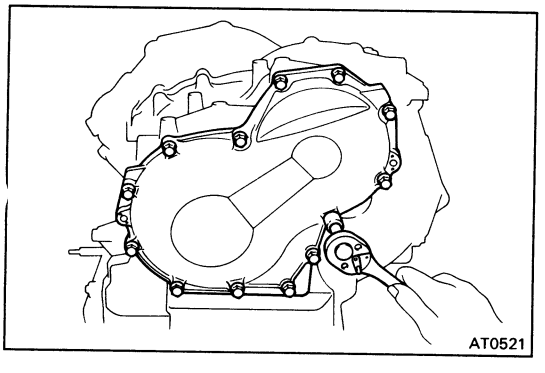

45. REMOVE TRANSAXLE REAR COVER

(a) Remove the thirteen bolts.

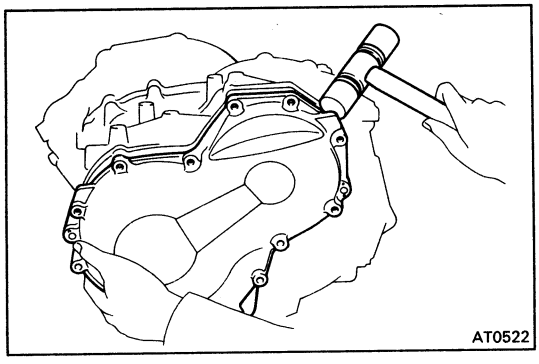

(b) Tap off the circumference of the cover with a plastic hammer to remove the cover from the transmission case, and remove the cover.

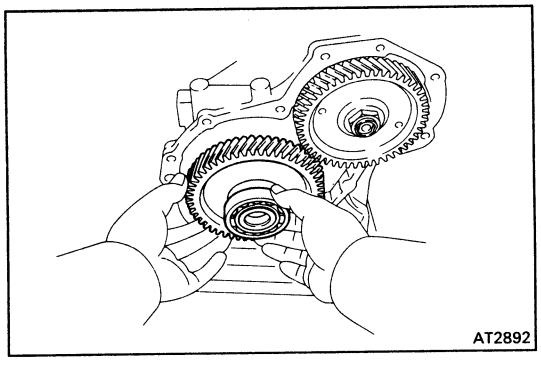

46. REMOVE INTERMEDIATE SHAFT

Remove the intermediate shaft from the transmission case.

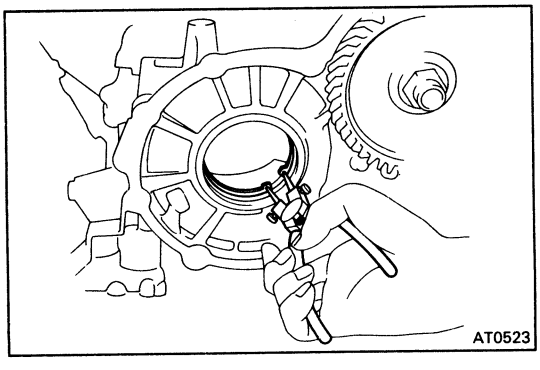

47. REMOVE SNAP RING

Using snap ring pliers, remove the snap ring.

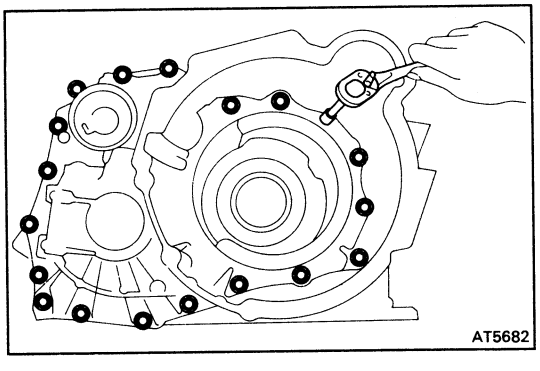

48. REMOVE TRANSAXLE HOUSING

Remove the nineteen bolts and transaxle housing.

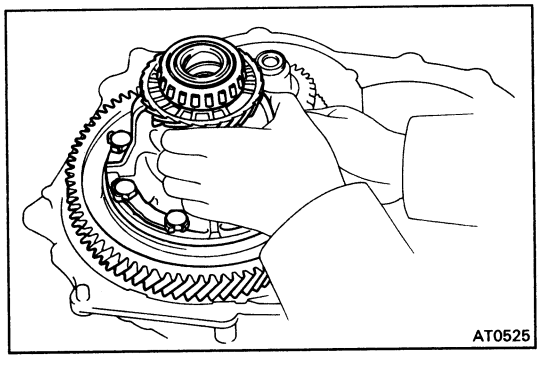

49. REMOVE DIFFERENTIAL

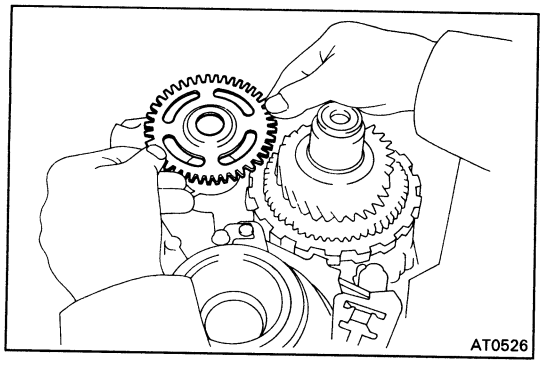

50. REMOVE GOVERNOR DRIVEN GEAR

(a) Remove the governor driven gear.

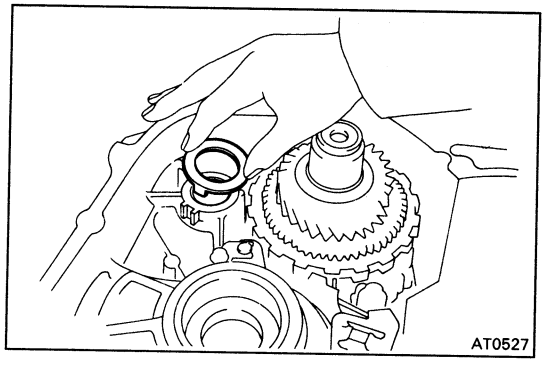

(b) Remove the thrust washer.

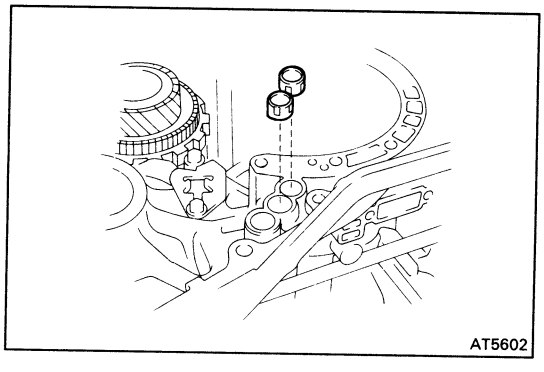

51. REMOVE APPLY GASKETS

Remove the two gaskets.

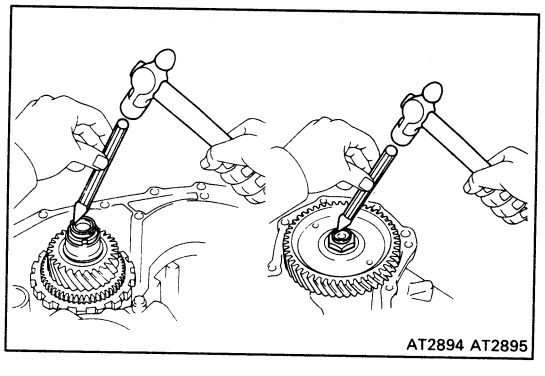

52. REMOVE COUNTER SHAFT LOCK NUTS

(a) Using a chisel and hammer, unstake the counter shaft lock nut on both sides.

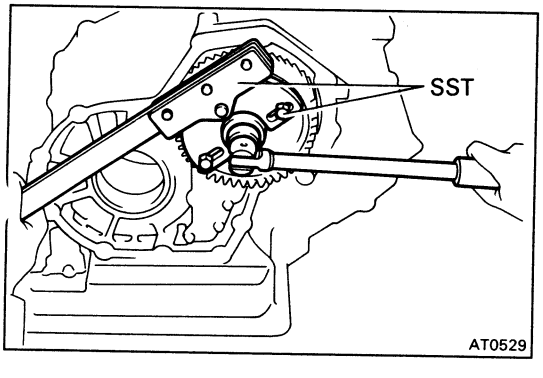

(b) Using SST, remove the lock nut of the driven gear side.

SST 09330-00021, 09350-32014 (09351-32032)

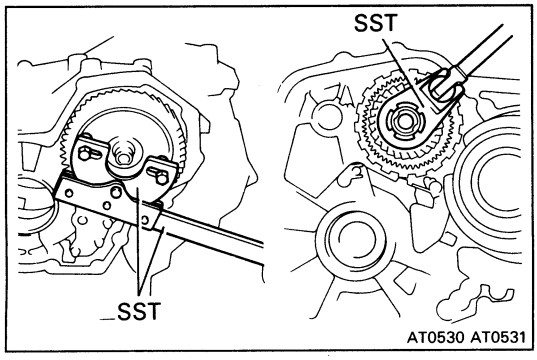

(c) Using SST to hold the driven gear, remove the lock nut of the another side.

SST 09330-00021 and
09350-32014 (09351-32032, 09351-32170)

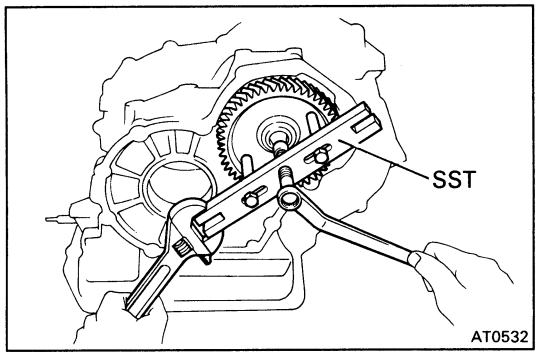

53. REMOVE COUNTER DRIVEN GEAR

Using SST, remove the driven gear.

SST 09350-32014 (09351-32061)

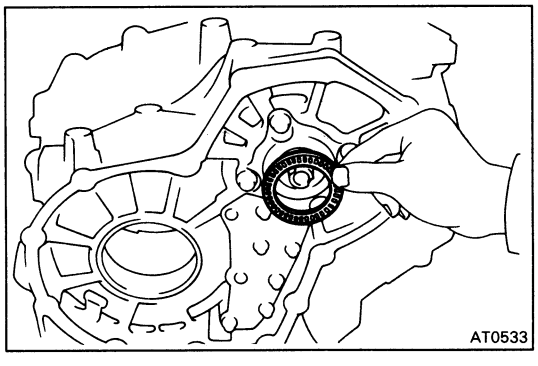

54. REMOVE THRUST NEEDLE BEARING

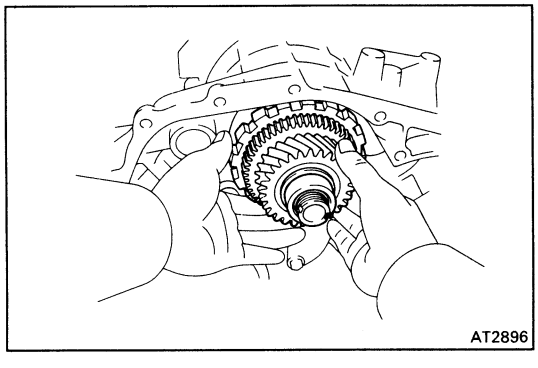

55. REMOVE COUNTER SHAFT ASSEMBLY

Pull out the counter shaft assembly.

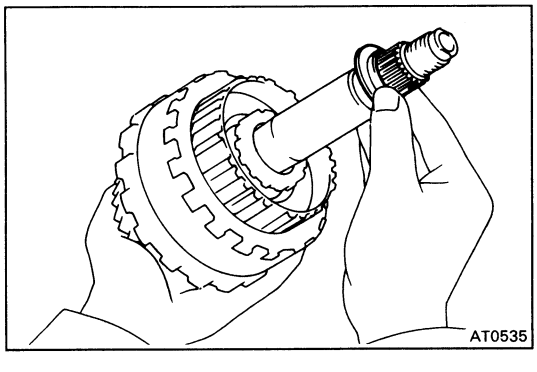

56. REMOVE THRUST BEARING WITH RACE

Remove the thrust bearing with race from the counter shaft assembly.

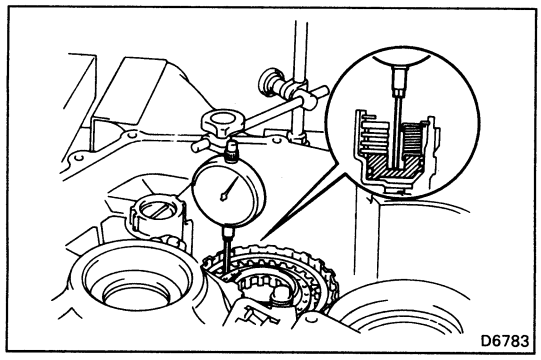

57. CHECK PISTON STROKE OF UNDERDRIVE CLUTCH

(a) Set a dial indicator (long type pick or SST) as shown.

SST 09350-32014 (09351-32190)

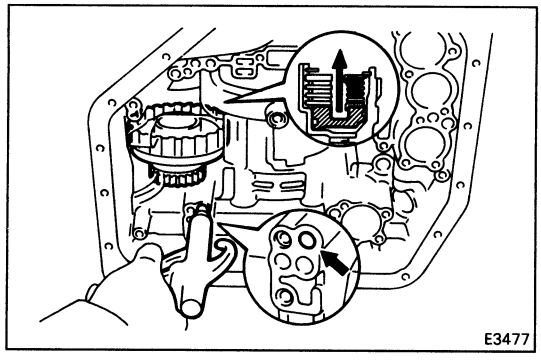

(b) Applying and releasing the compressed air (4 – 8 kg/cm², 57 – 114 psi, 392 – 785 kPa), measure the underdrive clutch piston stroke.

Piston stroke: 1.22 – 1.54 mm (0.0480 – 0.0606 in.)

If the piston stroke is nonstandard, select another flange.

HINT: There are two different flange thickness.

Flange thickness: 2.30 mm (0.0906 in.)
2.50 mm (0.0984 in.)
2.70 mm (0.1063 in.)

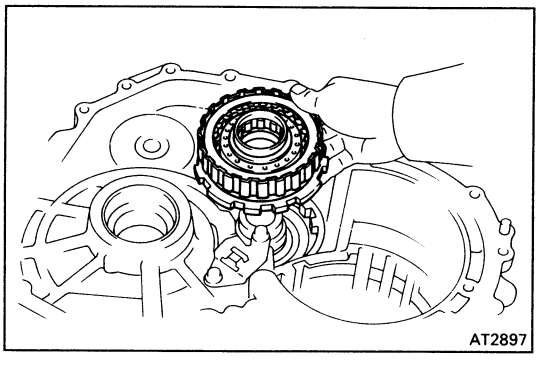

58. REMOVE UNDERDRIVE CLUTCH DRUM AND ANTI-RATTLE CLIP

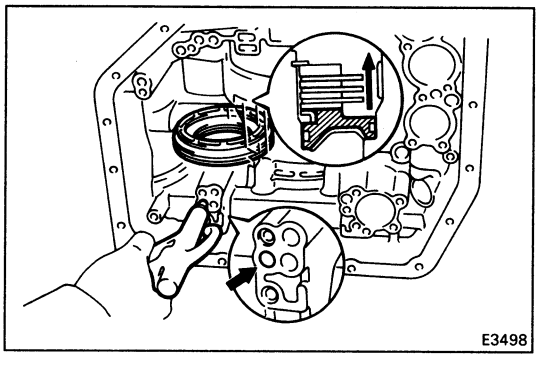

59. CONFIRM THAT UNDERDRIVE BRAKE PISTON MOVES

Using compressed air, confirm that the underdrive brake piston moves smoothly.

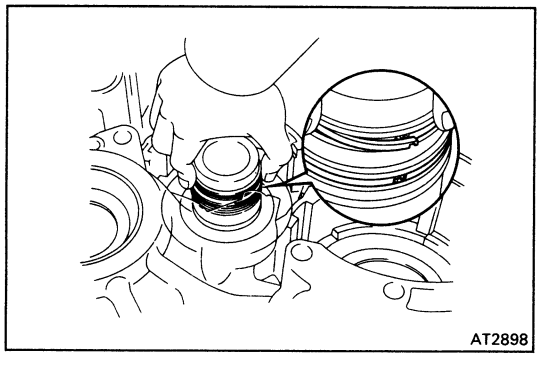

60. REMOVE OIL SEAL RINGS

Remove the two oil seal rings.

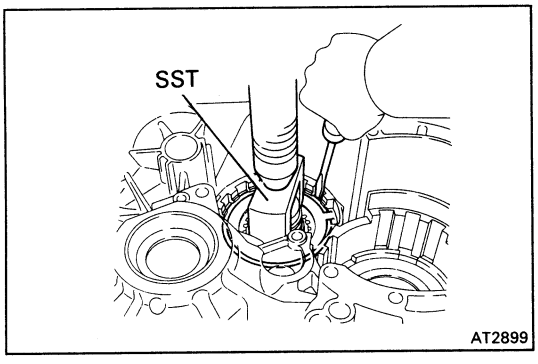

61. REMOVE FLANGE, PLATES AND DISCS

(a) Using SST and press, press in the flange until the snap ring is free from the flange.

SST 09350-32014 (09351-32070)

(b) Using a screwdriver, remove the snap ring.

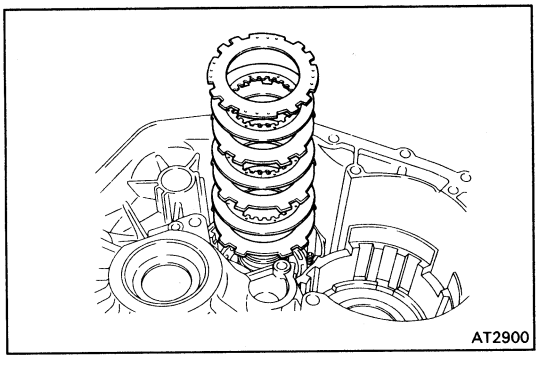

(c) Remove the flange, three plates and discs.

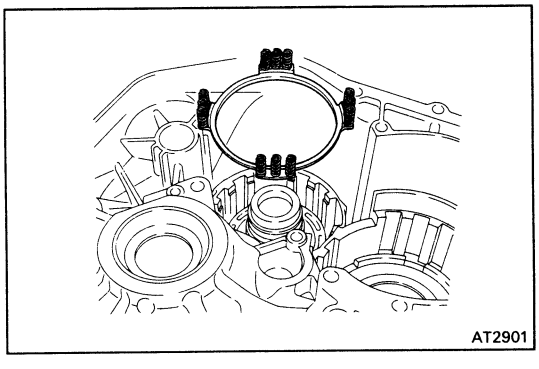

62. REMOVE RETURN SPRING

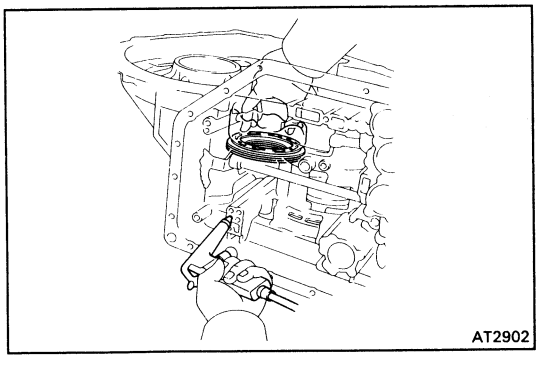

63. REMOVE UNDERDRIVE BRAKE PISTON

Using low-pressure compressed air (1 kg/cm^2, 14 psi, 98 kPa), pop out the brake piston into a rag. Force air into the hole shown and remove the brake piston.

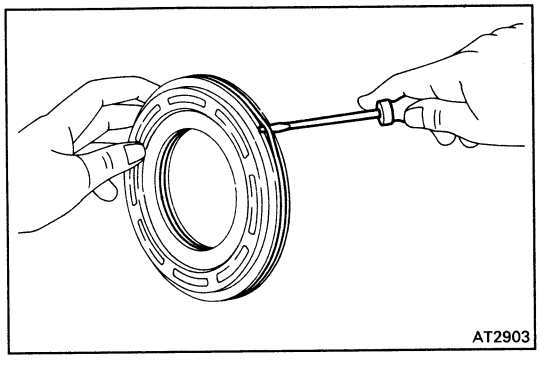

64. REMOVE O-RINGS FROM PISTON

Remove the two O-rings from the piston.

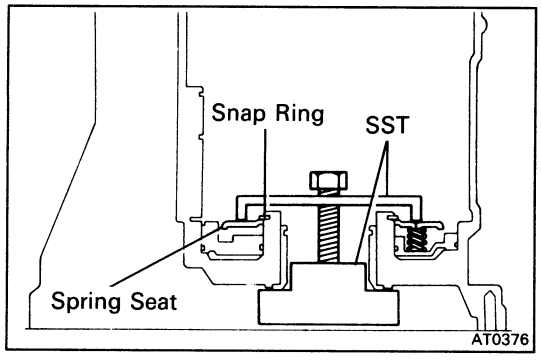

65. REMOVE SNAP RING

(a) Set SST, and tighten the bolt gradually to compress the springs until the snap ring is free from the spring seat.

SST 09350-32014 (09351-32040)

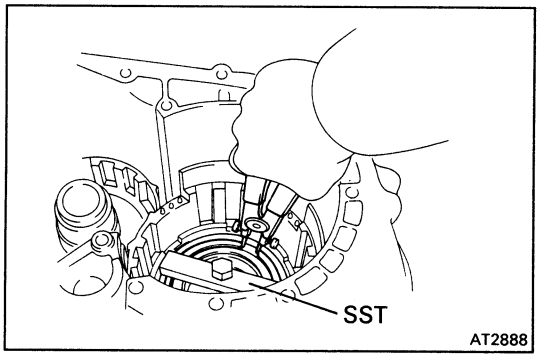

(b) Using snap ring pliers, remove the snap ring.

(c) Remove SST.

SST 09350-32014 (09351-32040)

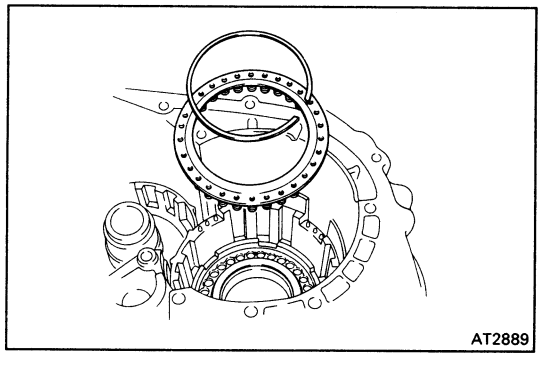

66. REMOVE RETURN SPRING

Remove the return spring and snap ring.

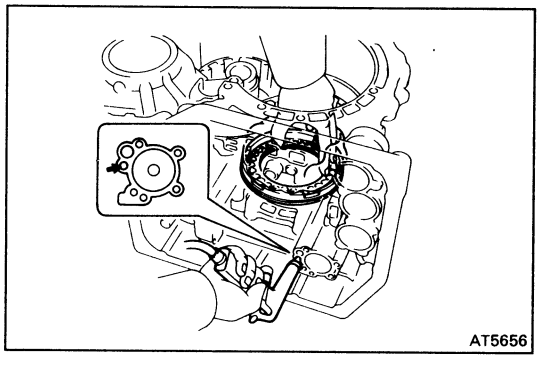

67. REMOVE PISTON FROM TRANSMISSION CASE WITH COMPRESSED AIR

(a) Apply compressed air into the oil passage of the case to remove the piston.

HINT: Hold the piston so it is not slanted and blow with the gun slightly away from the oil hole.

(b) If the piston does not pop out with compressed air, use needle-nose pliers to remove it.

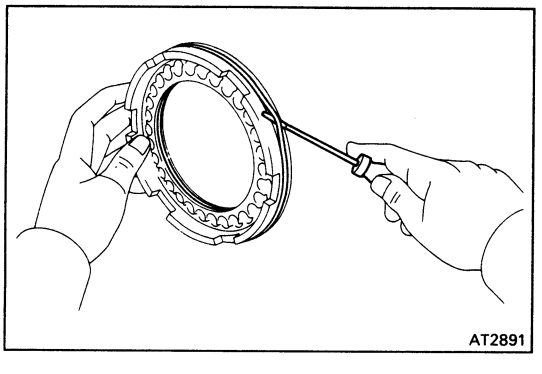

68. REMOVE O-RINGS FROM PISTON

Remove the two O-rings from the piston.

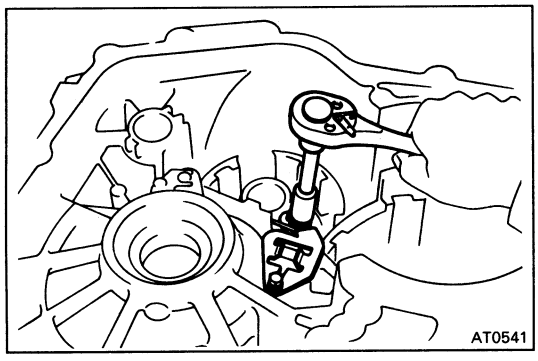

69. REMOVE PARKING LOCK PAWL STOPPER PLATE, TORSION SPRING AND SPRING GUIDE

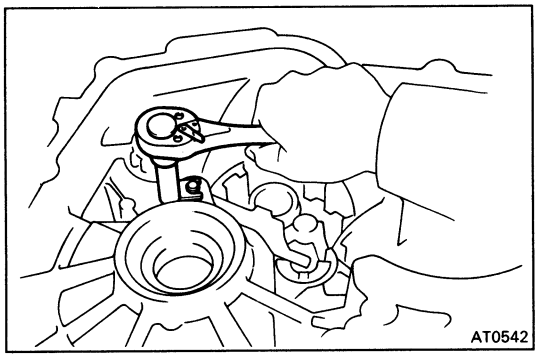

70. REMOVE PAWL SHAFT CLAMP

Remove the bolt and pawl shaft clamp.

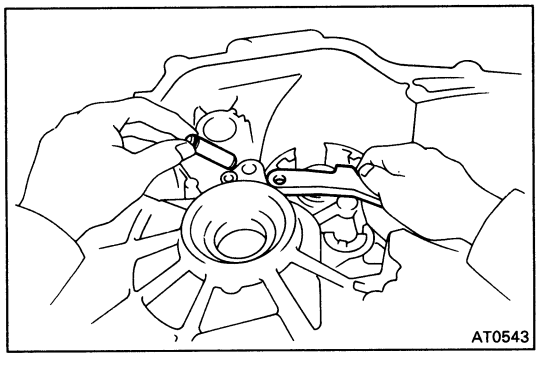

71. REMOVE PARKING LOCK PAWL SHAFT AND LOCK PAWL

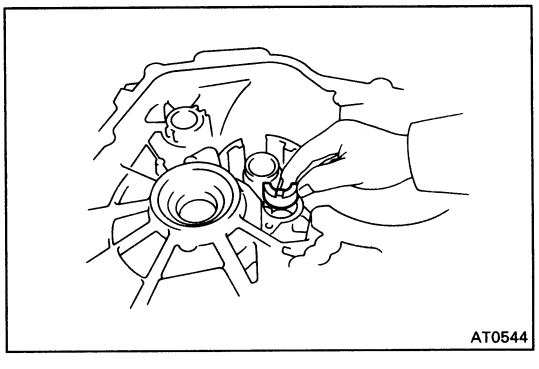

72. REMOVE PARKING LOCK SLEEVE

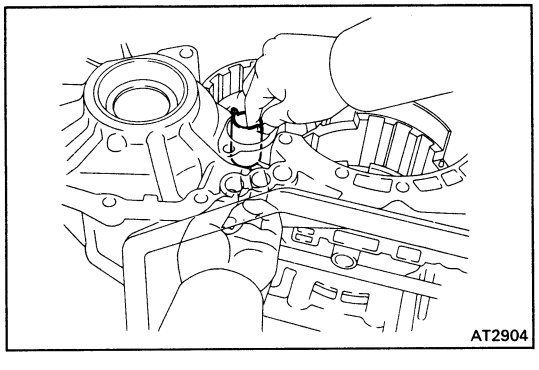

73. REMOVE CAM GUIDE BRACKET

Remove the cam guide bracket as shown.

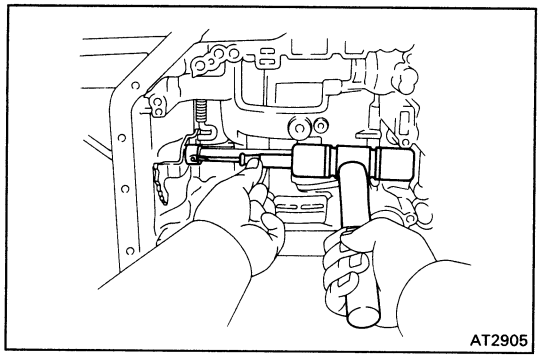

74. REMOVE MANUAL VALVE SHAFT SPACER

Using a screwdriver and hammer, unstake the spacer and remove it.

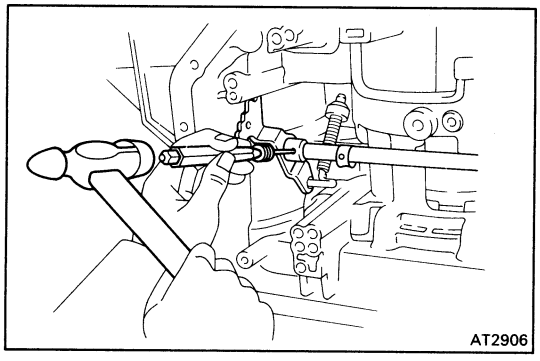

75. REMOVE PIN

Using a punch and hammer, drive out the pin.

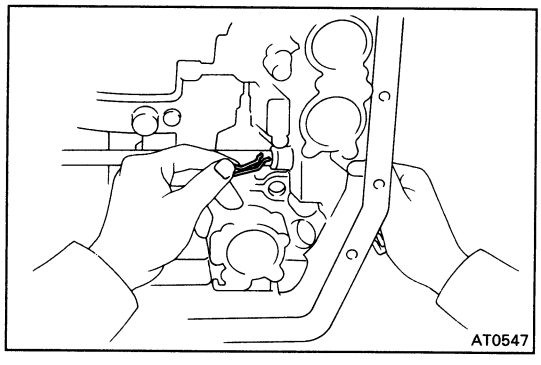

76. REMOVE MANUAL VALVE SHAFT AND LEVER

(a) Remove the retaining spring.

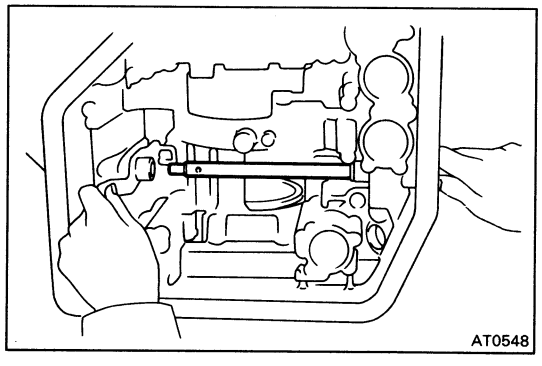

(b) Slide out the manual valve shaft and remove the manual valve lever and washer.

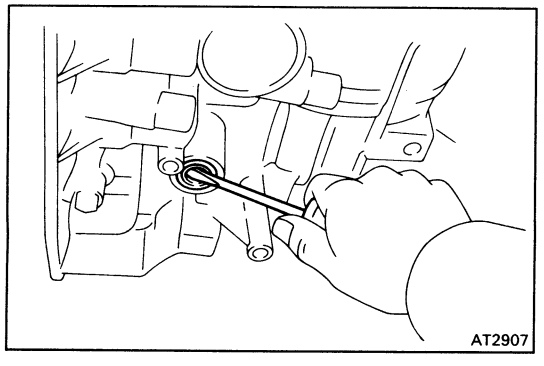

77. IF NECESSARY, REPLACE OIL SEAL OF MANUAL SHAFT

(a) Using a screwdriver, remove the oil seal.

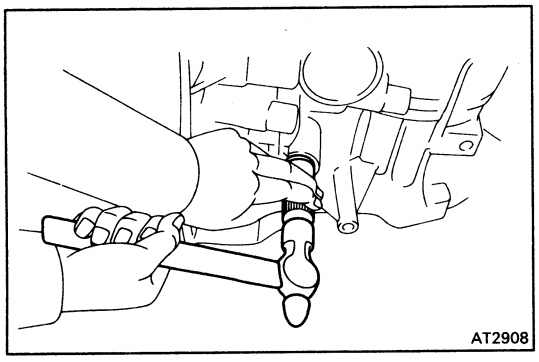

(b) Using a 14 mm socket wrench and hammer, drive in a new oil seal.

(c) Apply MP grease to the oil seal lip.

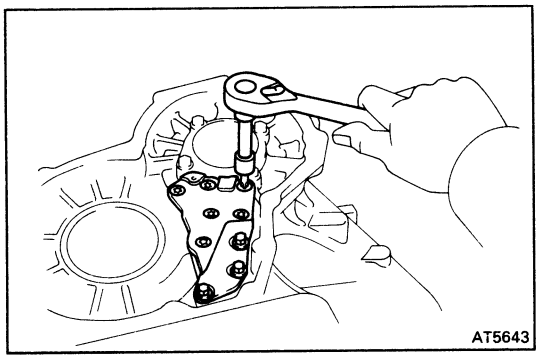

78. REMOVE OIL GALLERY COVER AND GASKET

(a) Remove the three bolts.

(b) Using a torx wrench, remove the six screws. Remove the gallery cover and gasket.

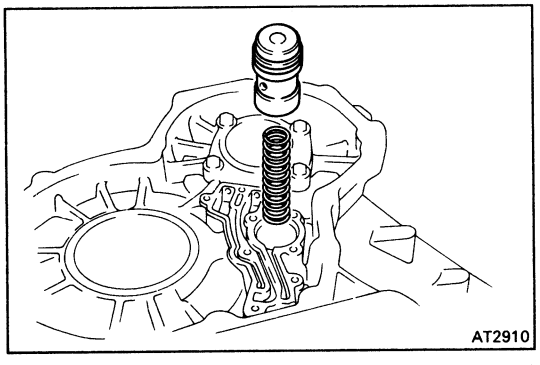

79. REMOVE B_4 ACCUMULATOR PISTON AND SPRING

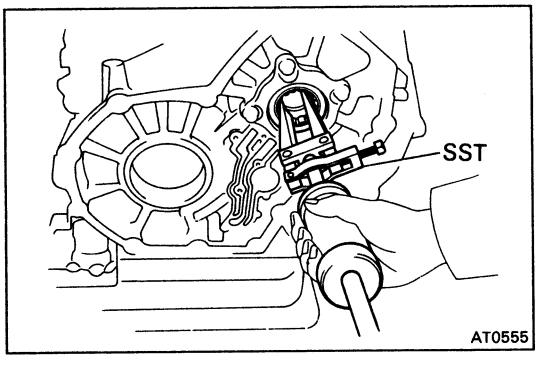

80. REMOVE BEARING

Using SST, remove the bearing.

SST 09308-00010

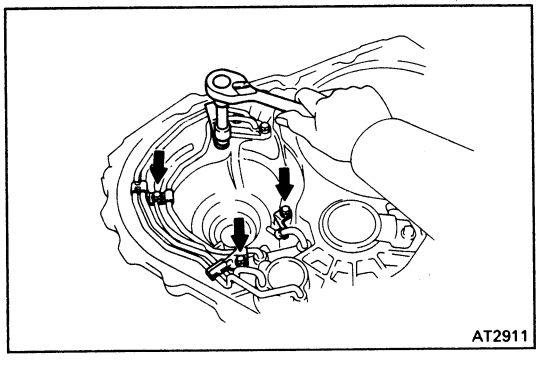

81. REMOVE OIL TUBES

(a) Remove the four tube clamps from transaxle housing.

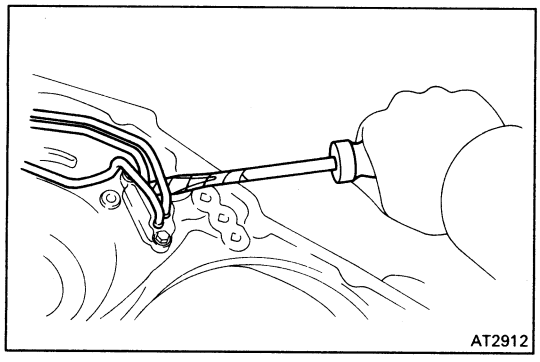

(b) Using a screwdriver, remove the three oil tubes.

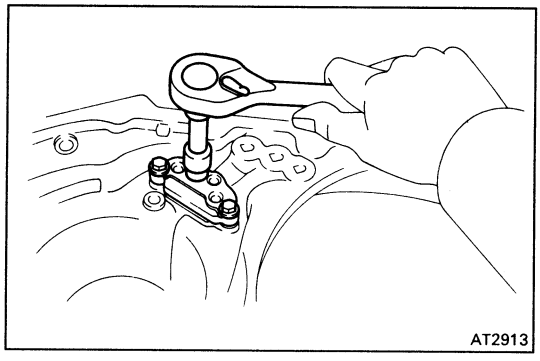

82. REMOVE OIL TUBE APPLY COVER AND GASKET

Remove the three bolts, and remove the cover and gasket.

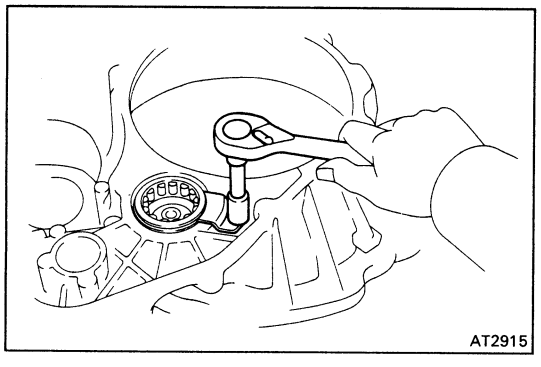

83. REMOVE BEARING

(a) Remove the bolt and retainer.

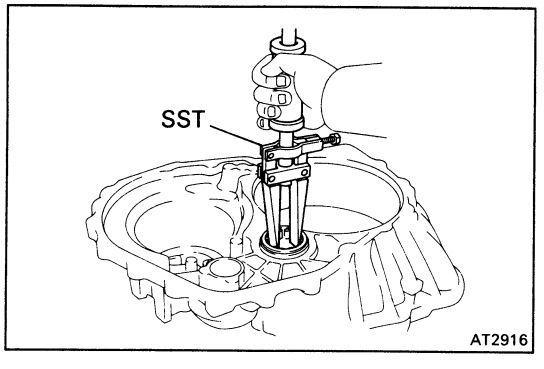

(b) Using SST, remove the bearing.

SST 09308-00010

COMPONENT PARTS

General Notes

The instructions here are organized so that you work on only one component group at a time. This will help avoid confusion from similar-looking parts of different subassemblies being on your workbench at the same time.
The component groups are inspected and repaired from the converter housing side.
As much as possible, complete the inspection, repair and assembly before proceeding to the next component group. If a component group can not be assembled because parts are being ordered, be sure to keep all parts of that group in a separate container while proceeding with disassembly, inspection, repair and assembly for other component groups.

GENERAL CLEANING NOTES:

1. All disassembled parts should be washed clean with any fluid passages and holes blown through with compressed air.
2. When using compressed air to dry parts, always aim away from yourself to prevent accidentally spraying automatic transmission fluid or kerosene in your face.
3. The recommended automatic transmission fluid kerosene should be used for cleaning.

PARTS ARRANGEMENT:

1. After cleaning, the parts should be arranged in proper order to allow efficient inspection, repairs, and reassembly.
2. When disassembling a valve body, be sure to keep each valve together with the corresponding spring.
3. New brakes and clutches that are to be used for replacement must be soaked in transmission fluid for at least two hours before assembly.

GENERAL ASSEMBLY:

1. All oil seal rings, clutch discs, clutch plates, rotating parts, and sliding surfaces should be coated with transmission fluid prior to reassembly.
2. All gaskets and rubber O-rings should be replaced.
3. Make sure that the ends of a snap ring are not aligned with one of the cutouts and are installed in the groove correctly.
4. If a worn bushing is to be replaced, the subassembly containing that bushing must be replaced.
5. Check thrust bearings and races for wear or damage. Replace if necessary.
6. Use petroleum jelly to keep parts in place.

Second Coast Brake

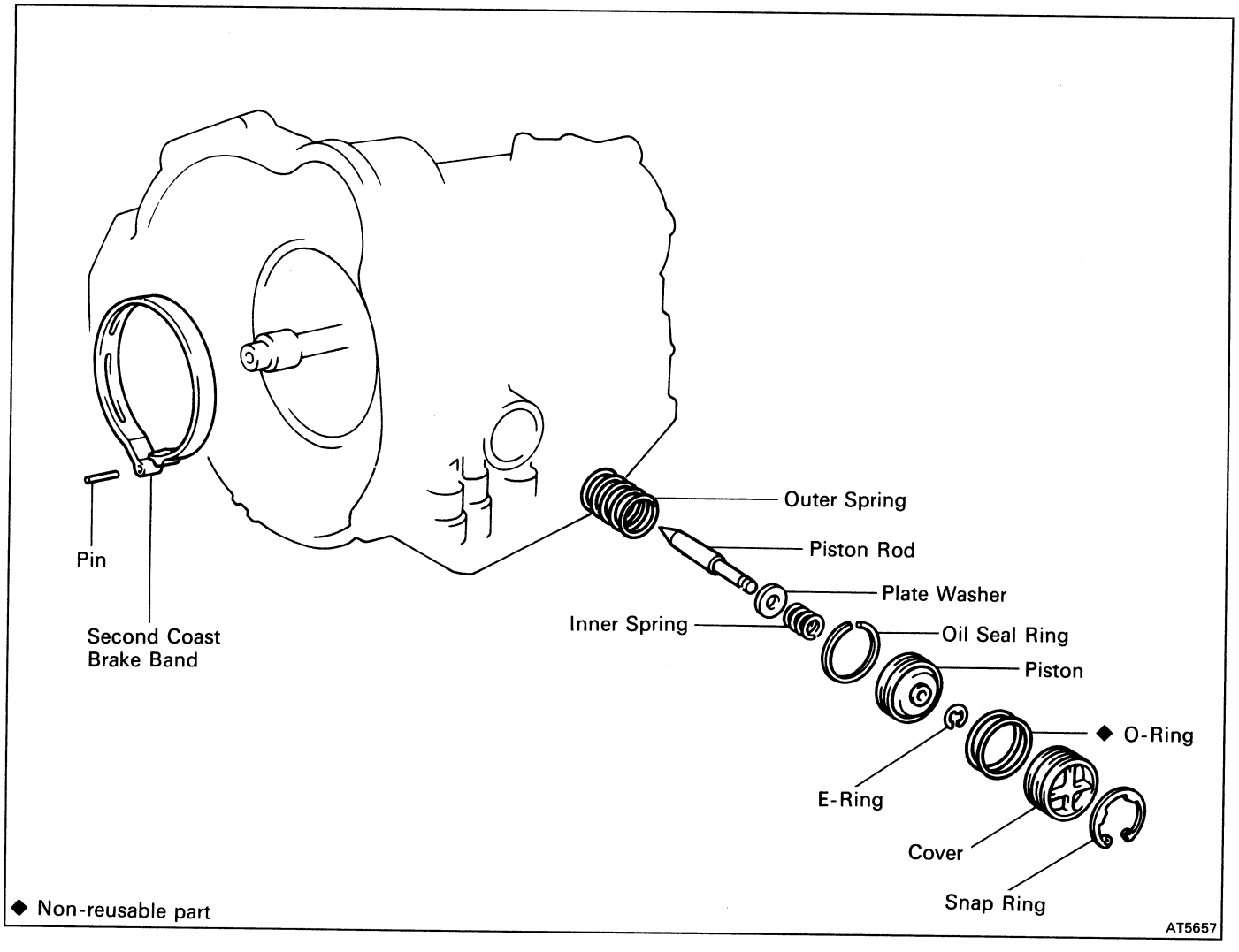

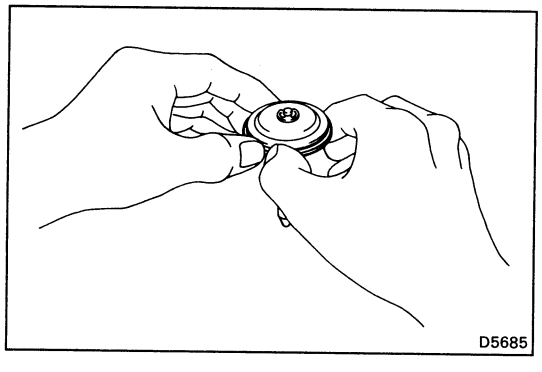

DISASSEMBLY OF SECOND COAST BRAKE PISTON

1. **REMOVE OIL SEAL RING**

   Remove the oil seal ring from the piston.

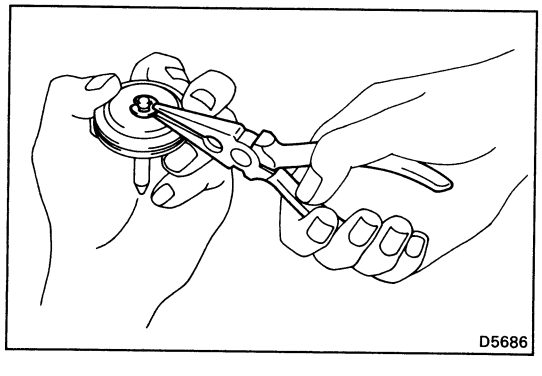

2. **REMOVE PISTON ROD**

   (a) Remove the E-ring while pushing the piston with needle-nose pliers.

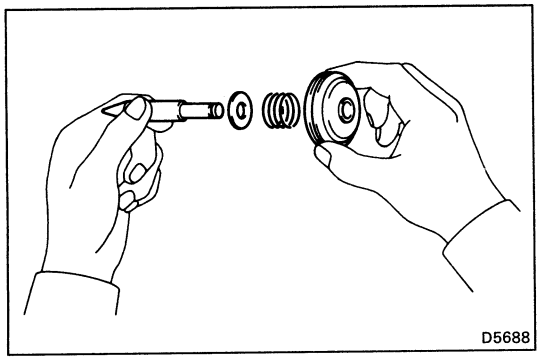

(b) Remove the spring, washer and piston rod.

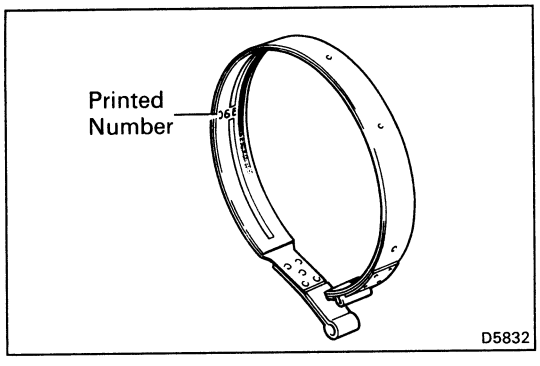

INSPECTION OF SECOND COAST BRAKE COMPONENT

INSPECT BRAKE BAND

If the lining of the brake band is exfoliated or discolored, or even part of the printed numbers are defaced, replace the brake band.

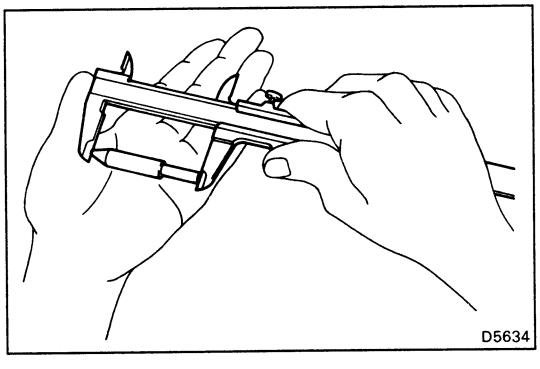

ASSEMBLY OF SECOND COAST BRAKE PISTON

1. **SELECT PISTON ROD**

If the band is OK with piston stroke not within the standard value, select the piston rod.

There are two lengths of piston rod.

Piston rod length: 72.9 mm (2.870 in.)
71.4 mm (2.811 in.)

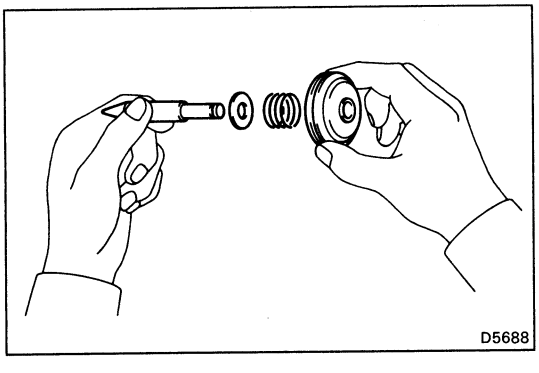

2. **INSTALL PISTON ROD**

(a) Install the washer and spring to the piston rod.

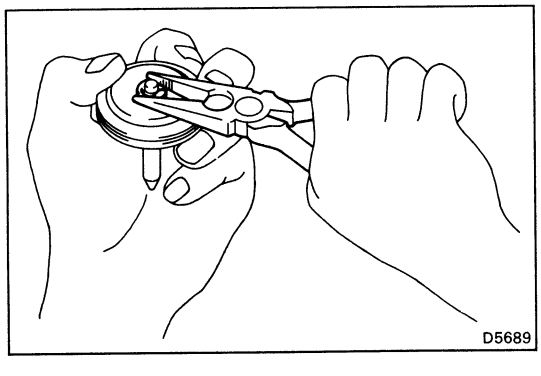

(b) Install an E-ring while pushing the piston.

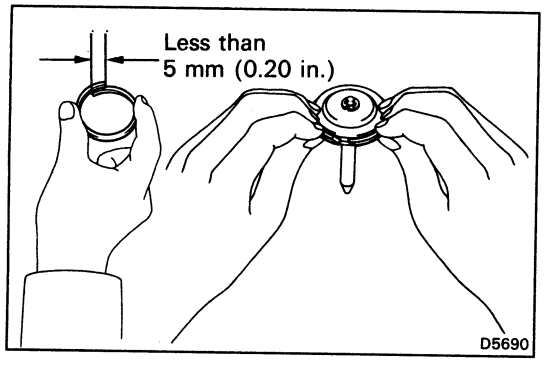

3. **INSTALL OIL SEAL RING**

(a) Apply ATF to the oil seal ring.

(b) Install the oil seal ring to the piston.

NOTICE: Do not spread the ring ends more than necessary.

Oil Pump

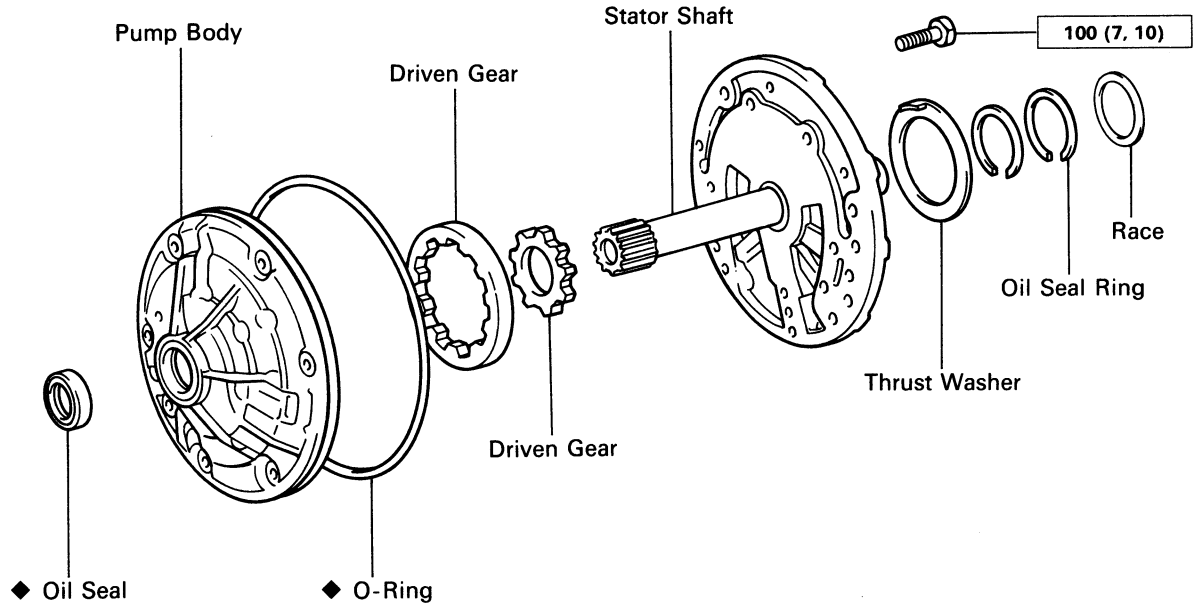

kg-cm (ft-lb, N·m) : Specified torque
◆ Non-reusable part

D5765

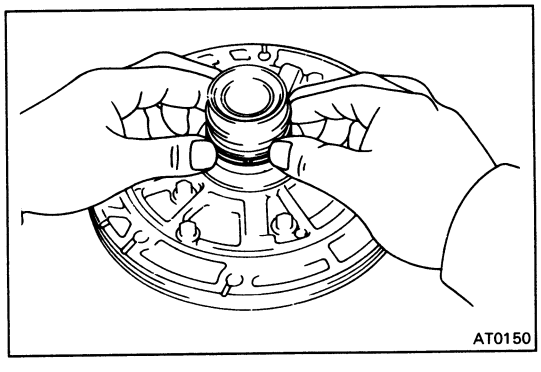

DISASSEMBLY OF OIL PUMP

1. REMOVE OIL SEAL RINGS

Remove the two oil seal rings from the stator shaft back side.

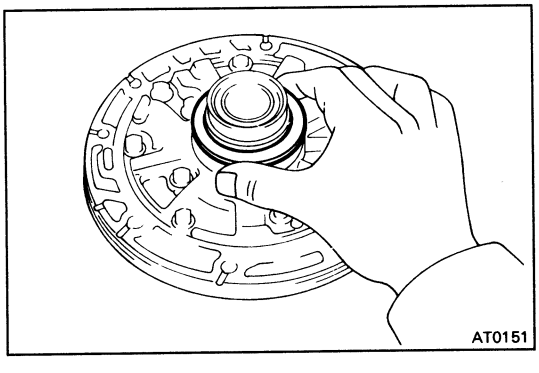

2. REMOVE THRUST WASHER FROM STATOR SHAFT BACK SIDE

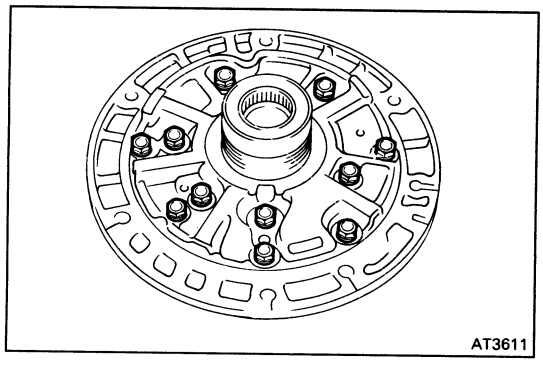
AT3611

3. **REMOVE STATOR SHAFT**

Remove the eleven bolts and stator shaft. Keep the gears in assembly order.

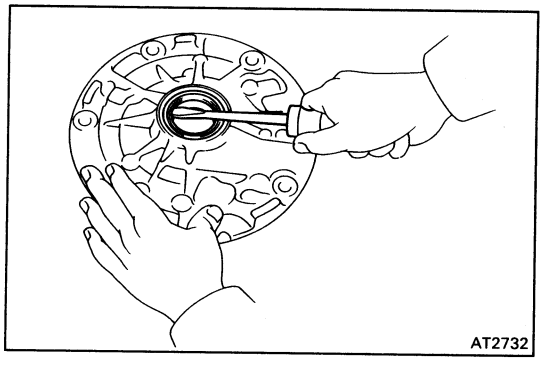
AT2732

4. **REMOVE FRONT OIL SEAL**

Pry off the oil seal with a screwdriver.

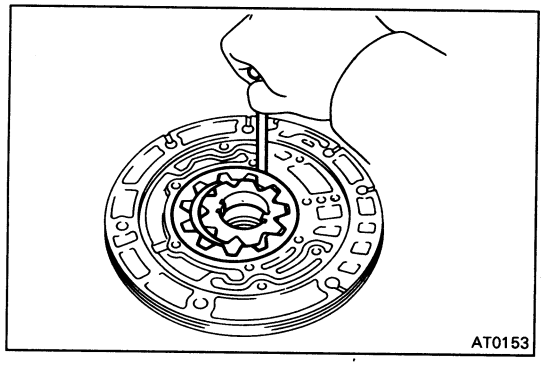
AT0153

INSPECTION OF OIL PUMP

1. **CHECK BODY CLEARANCE OF DRIVEN GEAR**

Push the driven gear to one side of the body.

Using a feeler gauge, measure the clearance.

Standard body clearance: **0.07 – 0.15 mm (0.0028 – 0.0059 in.)**

Maximum body clearance: **0.3 mm (0.012 in.)**

If the body clearance is greater than the maximum, replace the oil pump body subassembly.

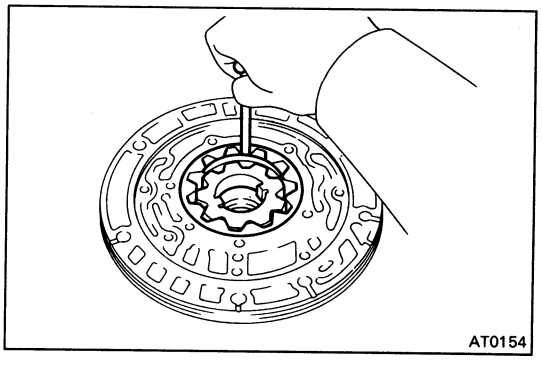
AT0154

2. **CHECK TIP CLEARANCE OF DRIVEN GEAR**

Measure between the driven gear teeth and the crescentshaped part of the pump body.

Standard tip clearance: **0.11 – 0.14 mm (0.0043 – 0.0055 in.)**

Maximum tip clearance: **0.3 mm (0.012 in.)**

If the tip clearance is greater than the maximum, replace the oil pump body subassembly.

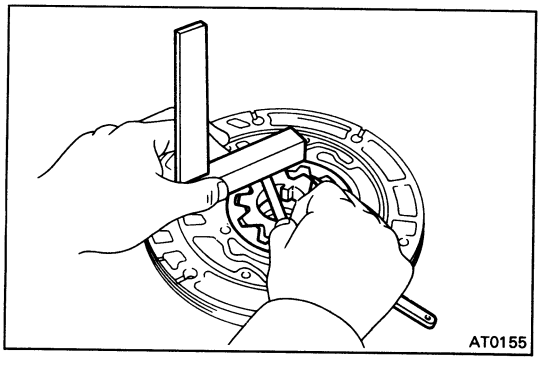
AT0155

3. **CHECK SIDE CLEARANCE OF BOTH GEARS**

Using a steel straightedge and a feeler gauge, measure the side clearance of both gears.

Standard side clearance: **0.02 – 0.05 mm (0.0008 – 0.0020 in.)**

Maximum side clearance: **0.1 mm (0.004 in.)**

There are different thicknesses for drive and driven gears.

Drive and driven gear thickness:
10.715 mm (0.4219 in.)

If the thickest gear can not make the side clearance within standard specification, replace the oil pump body subassembly.

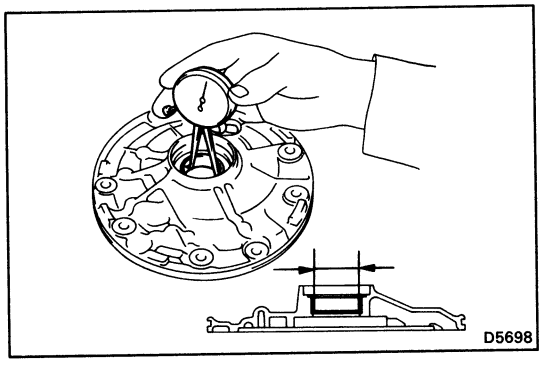

4. CHECK OIL PUMP BODY BUSHING

Using a dial indicator, measure the inside diameter of the oil pump body bushing.

Maximum inside diameter: 38.18 mm (1.5031 in.)

If the inside diameter is greater than the maximum, replace the oil pump body subassembly.

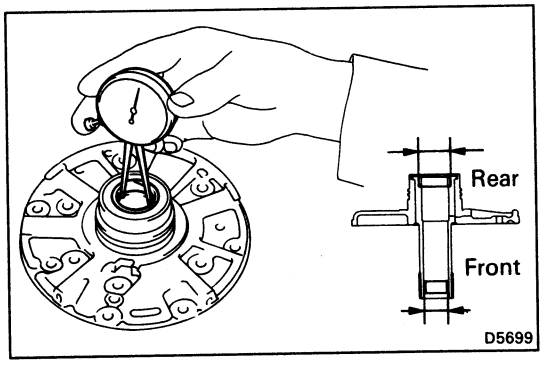

5. CHECK STATOR SHAFT BUSHINGS

Using a dial indicator, measure the inside diameter of the stator shaft bushings.

Maximum inside diameter:
Front side 21.57 mm (0.8492 in.)
Rear side 27.07 mm (1.0657 in.)

If the inside diameter is greater than the maximum, replace the stator shaft.

ASSEMBLY OF OIL PUMP

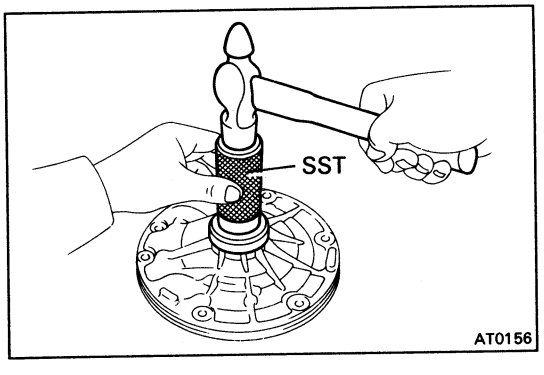

1. INSTALL FRONT OIL SEAL

Using SST and a hammer, install a new oil seal. The seal end should be flush with the outer edge of the pump body.

SST 09350-32014 (09351-32140)

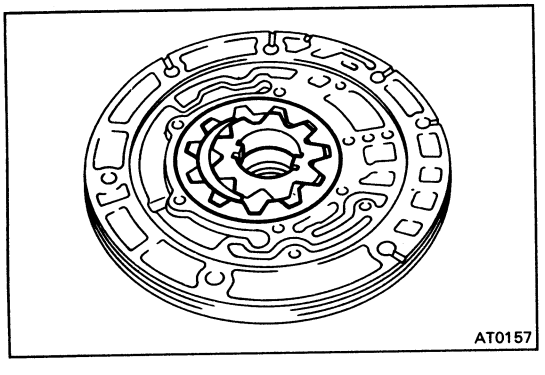

2. INSTALL DRIVEN GEAR AND DRIVE GEAR

Make sure the top of the gears are facing upward.

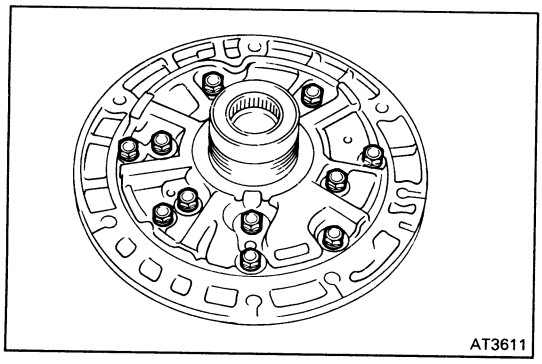

3. INSTALL STATOR SHAFT TO PUMP BODY

(a) Align the stator shaft with each bolt hole.

(b) Torque the eleven bolts.

Torque: 100 kg-cm (7 ft-lb, 10 N·m)

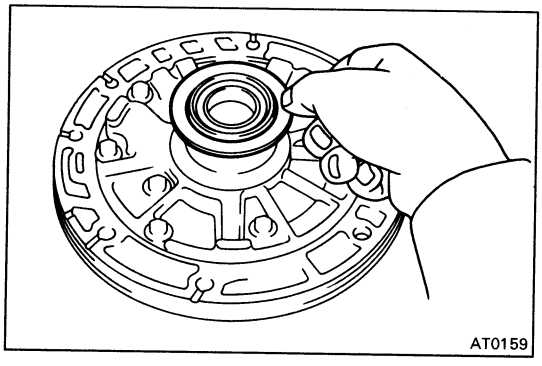

4. INSTALL THRUST WASHER

(a) Coat the thrust washer with petroleum jelly.

(b) Align the tab of the washer with the hollow of the pump body.

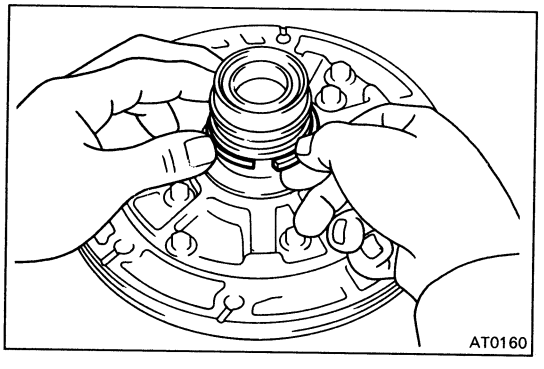

5. INSTALL OIL SEAL RINGS

Install the two oil seal rings to the stator shaft back side.

NOTICE: Do not spread the ring ends more than necessary.

HINT: After installing the oil seal rings, check that they move smoothly.

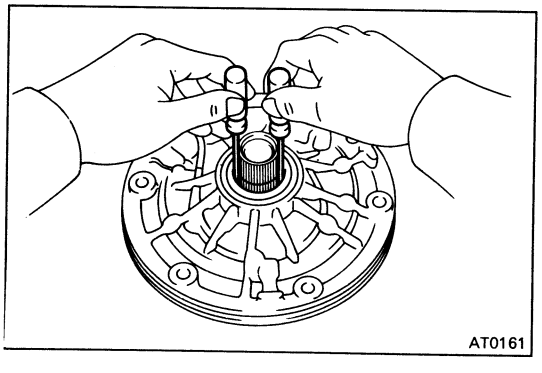

6. CHECK PUMP DRIVE GEAR ROTATION

Turn the drive gear with two screwdrivers and make sure it rotates smoothly.

NOTICE: Be careful not to damage the oil seal lip.

Direct Clutch

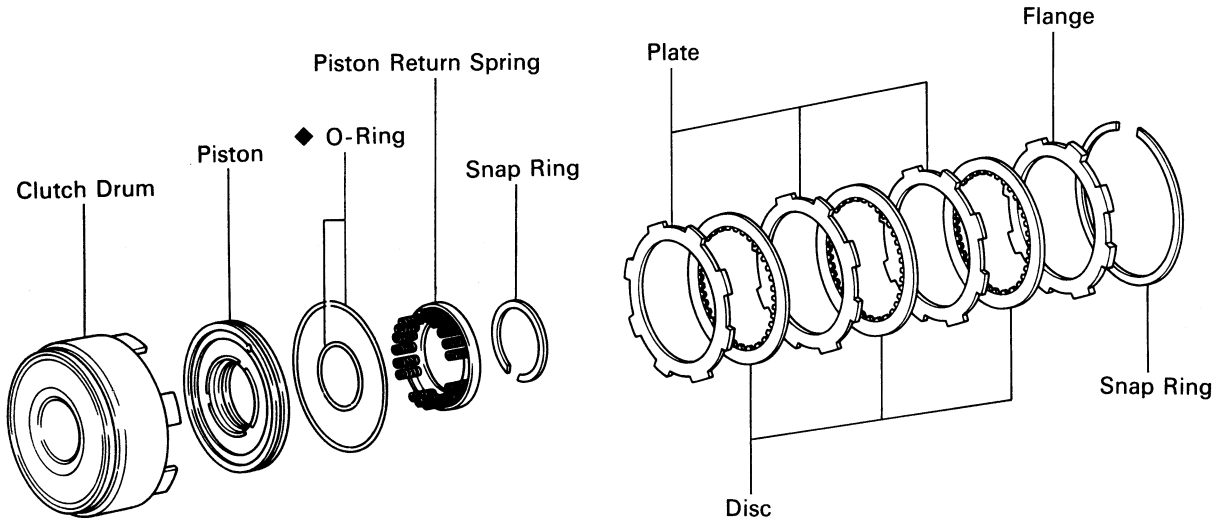

◆ Non-reusable part

AT5893

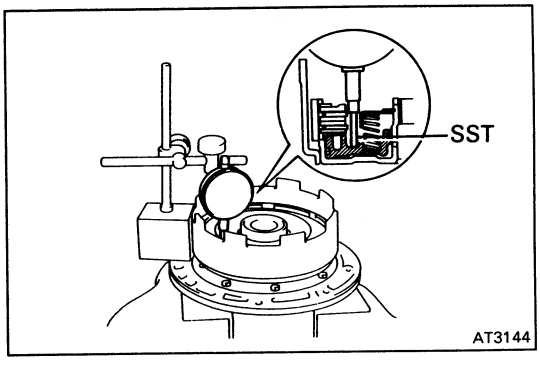

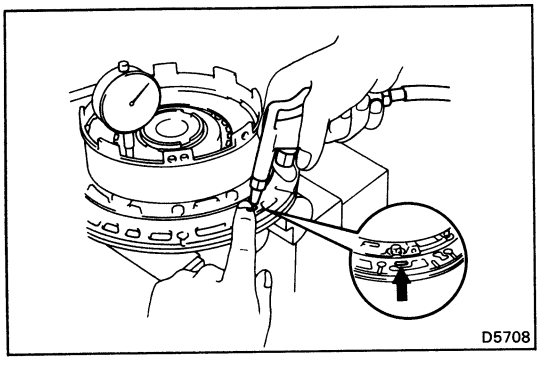

DISASSEMBLY OF DIRECT CLUTCH

1. CHECK PISTON STROKE OF DIRECT CLUTCH

(a) Install the direct clutch on the oil pump.

(b) Using a dial indicator (long type pick or SST), measure the direct clutch piston stroke applying and releasing the compressed air (4 – 8 kg/cm^2, 57 – 114 psi, 392 – 785 kPa) as shown.

SST 09350-32014 (09351-32190)

Piston stroke: 1.11 – 1.47 mm (0.0437 – 0.0579 in.)

If the piston stroke is greater than the maximum inspect the each component.

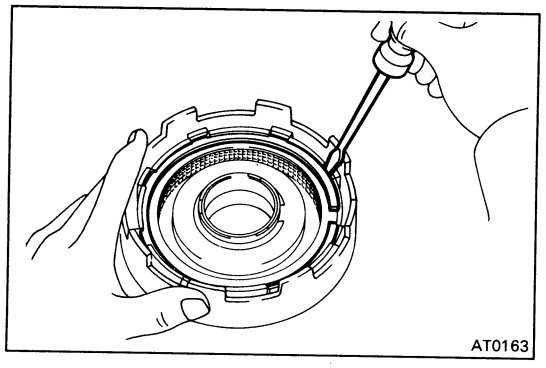

2. **REMOVE SNAP RING FROM CLUTCH DRUM**

3. **REMOVE FLANGE, DISCS AND PLATES**

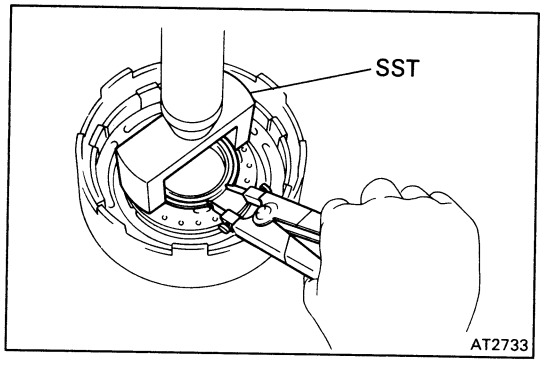

4. **REMOVE PISTON RETURN SPRING**

(a) Place SST on the spring retainer and compress the springs with a shop press.

SST 09350-32014 (09351-32070)

(b) Remove the snap ring with the snap ring pliers.

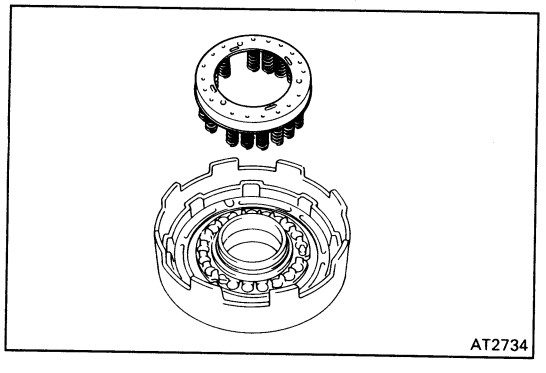

(c) Remove the piston return spring.

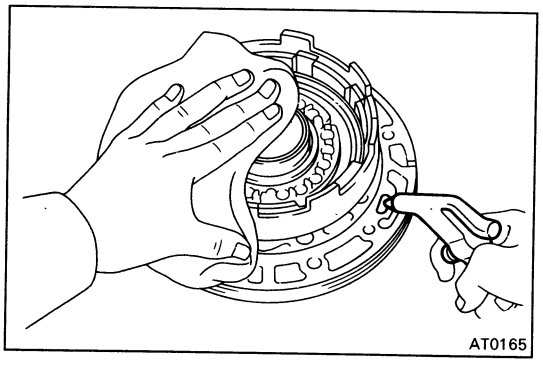

5. **REMOVE CLUTCH PISTON**

(a) Install the direct clutch onto the oil pump.

(b) Apply compressed air to the oil pump to remove the piston. (If the piston does not come out completely, use needle-nose pliers to remove it.)

(c) Remove the direct clutch from the oil pump.

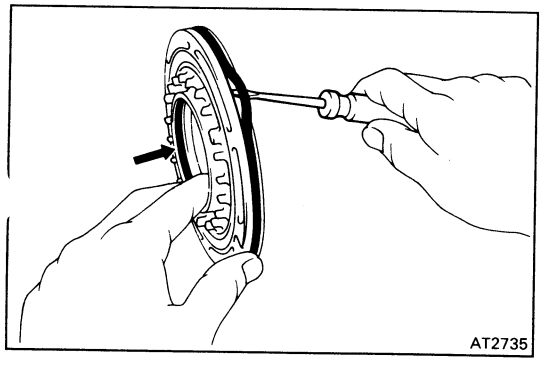

(d) Remove the two O-rings from the piston.

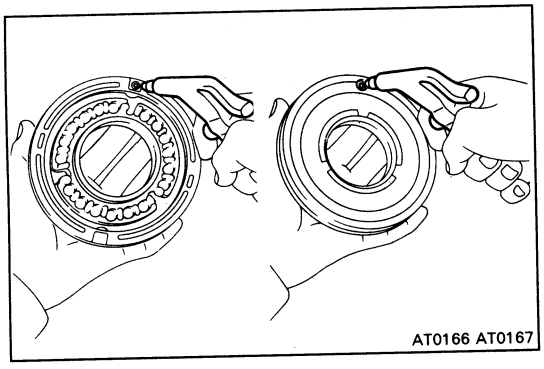
AT0166 AT0167

INSPECTION OF DIRECT CLUTCH

1. INSPECT CLUTCH PISTON

(a) Check that the check ball is free by shaking the piston.

(b) Check that the valve does not leak by applying low-pressure compressed air.

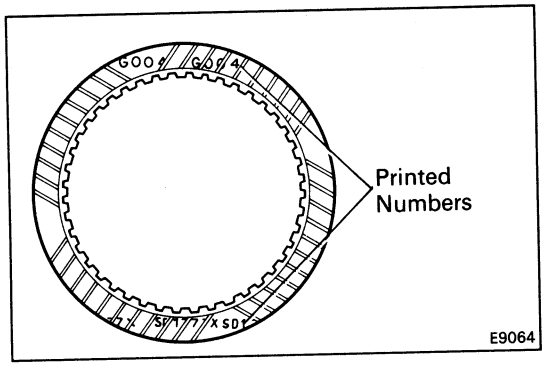

E9064

2. INSPECT DISC, PLATE AND FLANGE

Check if the sliding surface of the discs, plates and flanges are worn or burnt. If necessary, replace them.

HINT:

- If the lining of the disc is exfoliated or discolored, or even a part of the printed number is defaced, replace all discs.
- Before assembling new discs, soak them in ATF for at least two hours.

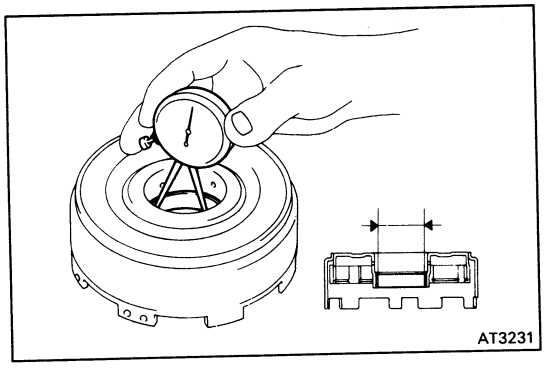
AT3231

3. CHECK DIRECT CLUTCH BUSHING

Using a dial indicator, measure the inside diameter of the direct clutch bushing.

Maximum inside diameter: 47.07 mm (1.8531 in.)

If the inside diameter is greater than the maximum, replace the direct clutch.

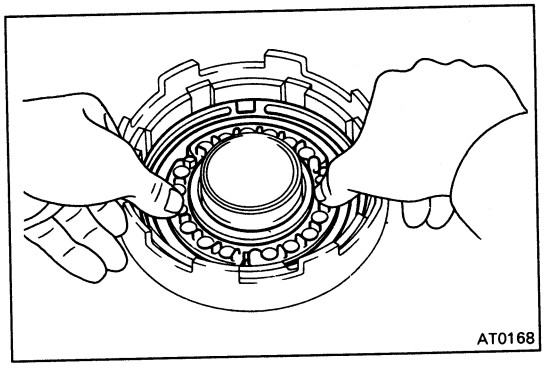
AT0168

ASSEMBLY OF DIRECT CLUTCH

1. INSTALL CLUTCH PISTON IN DIRECT CLUTCH DRUM

(a) Install new O-rings to the piston. Coat the O-rings with ATF.

(b) Being careful not to damage the O-rings, press the piston into the drum with the cup side up.

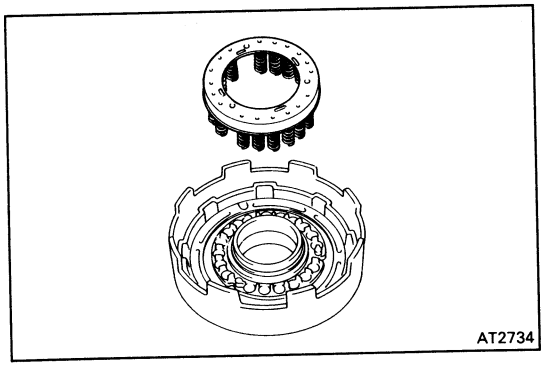
AT2734

2. INSTALL PISTON RETURN SPRING

(a) Place the return spring and snap ring onto the piston.

(b) Place SST on the return spring, and compress the return spring with a shop press.

SST 09350-32014 (09351-32070)

(c) Install the snap ring with the snap ring pliers. Be sure the end gap of snap ring is not aligned with the spring retainer claw.

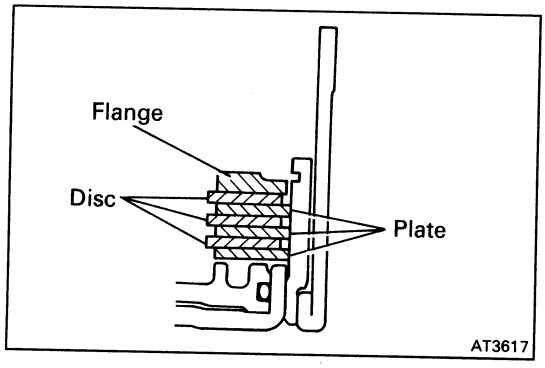

3. INSTALL PLATES, DISCS AND FLANGE

(a) Install plates and discs.
Install in order: P = Plate D = Disc
P – D – P – D – P – D

(b) Install the flange with the flat end facing downward.

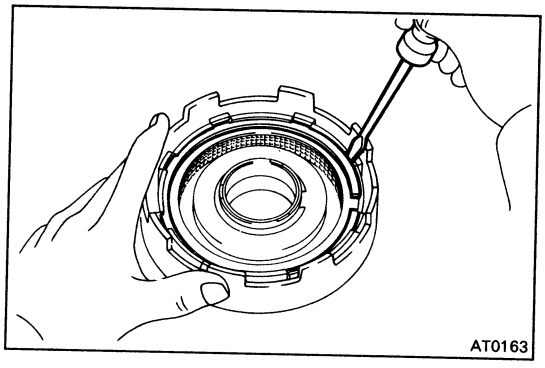

4. INSTALL SNAP RING

Check that the end gap of the snap ring is not aligned with one of the cutouts.

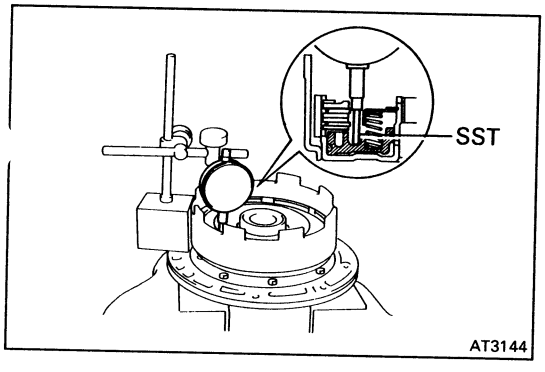

5. RECHECK PISTON STROKE OF DIRECT CLUTCH

(a) Install the direct clutch on the oil pump.

(b) Using a dial indicator (long type pick or SST), measure the direct clutch piston stroke applying and releasing the compressed air (4 – 8 kg/cm², 57 – 114 psi, 392 – 785 kPa) as shown.

SST 09350-32014 (09351-32190)

Piston stroke: 1.11 – 1.47 mm (0.0437 – 0.0579 in.)

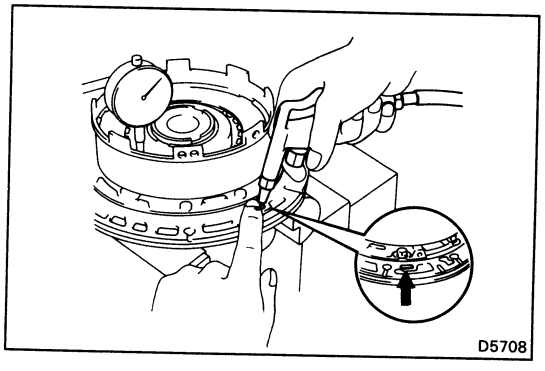

If the piston stroke is nonstandard, select another flange.

HINT: There are two different thicknesses for the flange.

Flange thicknesses: 2.6 mm (0.102 in.)
3.0 mm (0.118 in.)

Forward Clutch

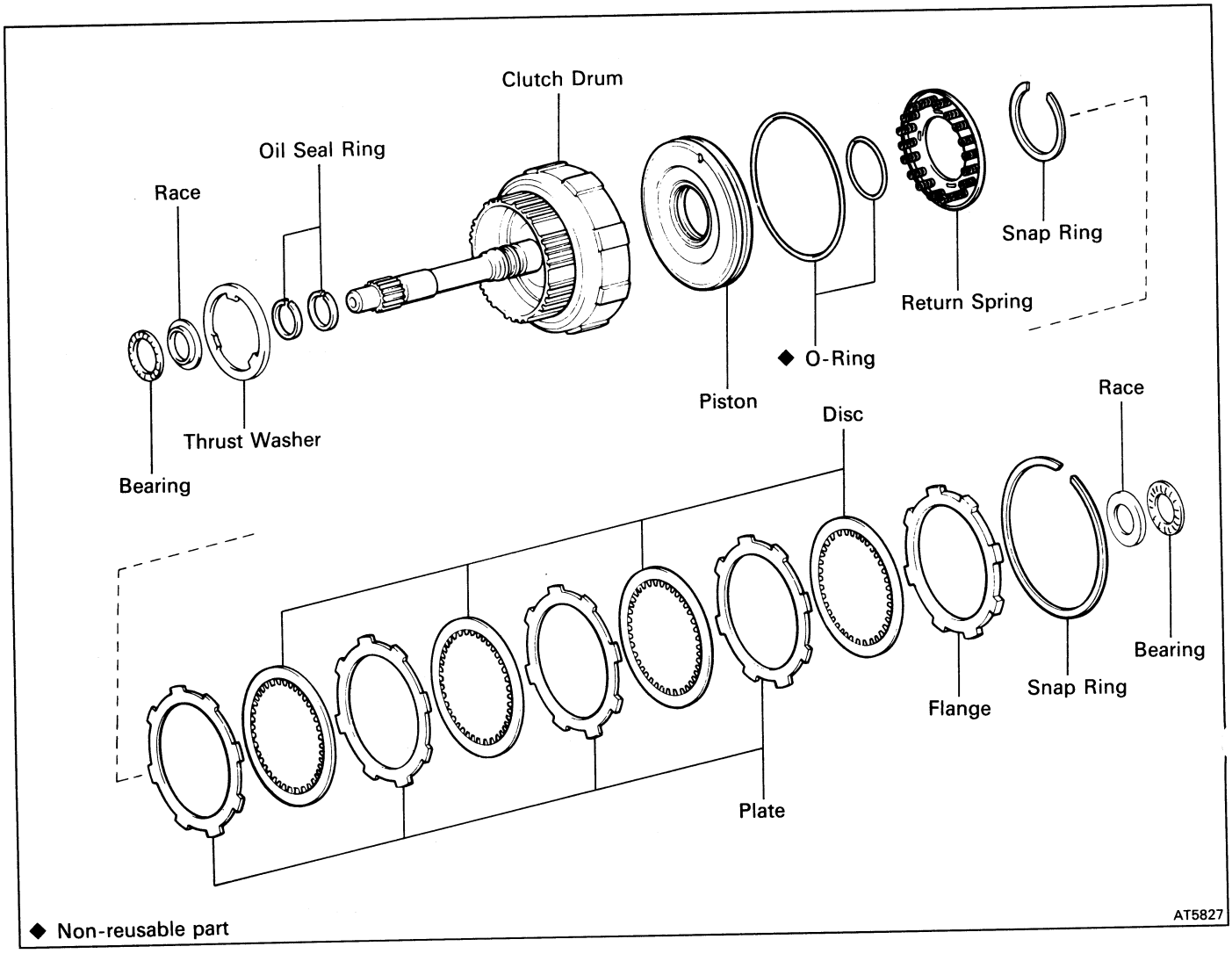

◆ Non-reusable part

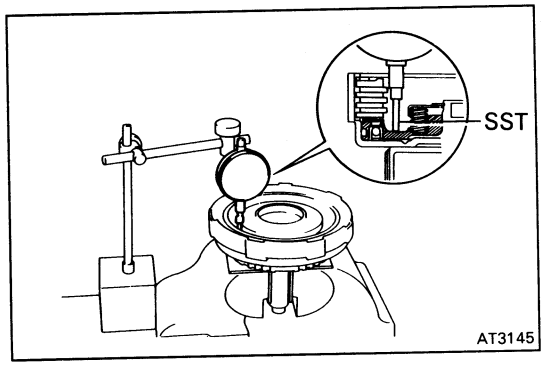

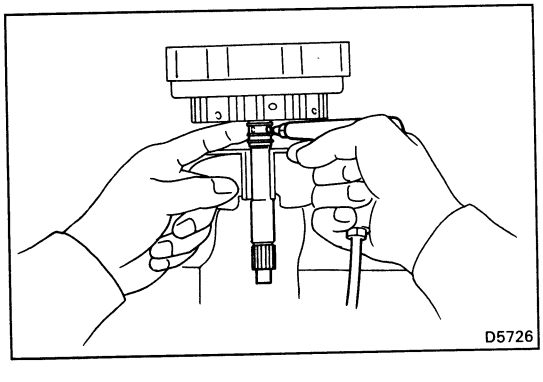

DISASSEMBLY OF FORWARD CLUTCH

1. CHECK PISTON STROKE OF FORWARD CLUTCH

Using a dial indicator (long type pick or SST), measure the forward clutch piston stroke applying and releasing the compressed air (4 – 8 kg/cm^2, 57 – 114 psi, 392 – 785 kPa) as shown.

SST 09350-32014 (09351-32190)

Piston stroke: 1.42 – 1.81 mm (0.0559 – 0.0713 in.)

If the piston stroke is greater than the maximum inspect the each component.

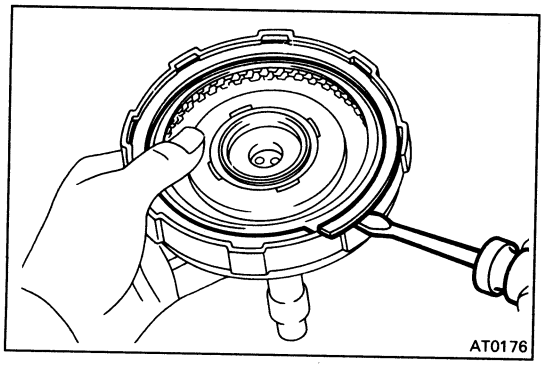

2. **REMOVE SNAP RING FROM CLUTCH DRUM**

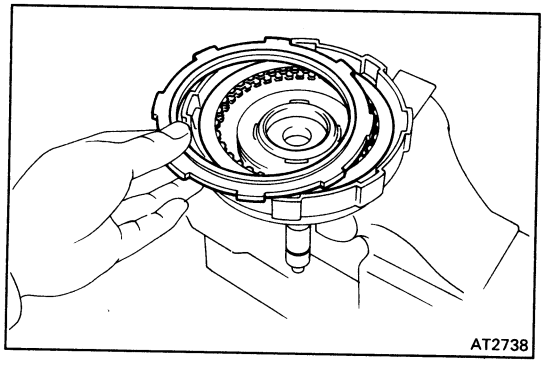

3. **REMOVE FLANGE, DISCS AND PLATES**

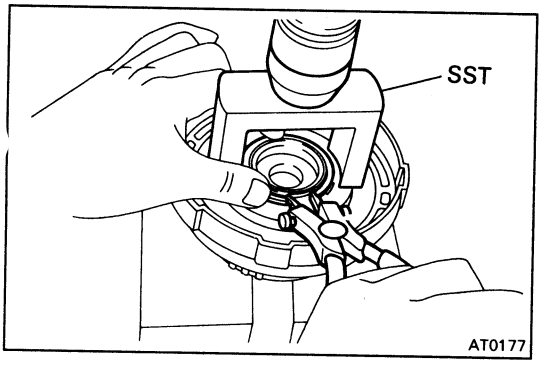

4. **REMOVE RETURN SPRINGS**

(a) Place SST on the spring retainer and compress the springs with a shop press.

SST 09350-32014 (09351-32070)

(b) Remove the snap ring with the snap ring pliers.

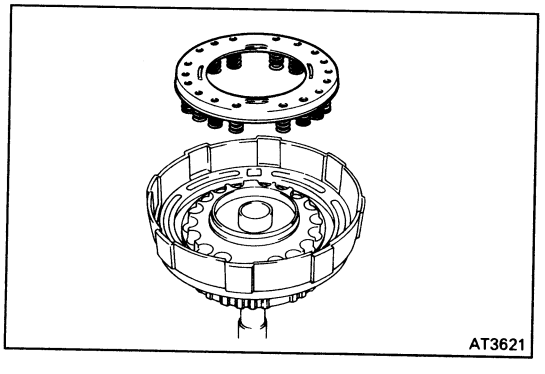

(c) Remove the return spring.

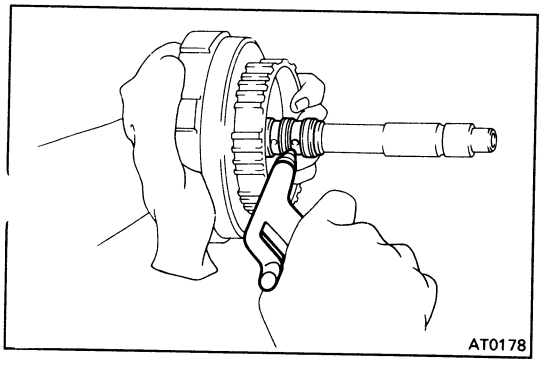

5. **REMOVE CLUTCH PISTON**

(a) Apply compressed air into the oil passage to remove the piston.

If the piston does not come out, use needle-nose pliers to remove it.

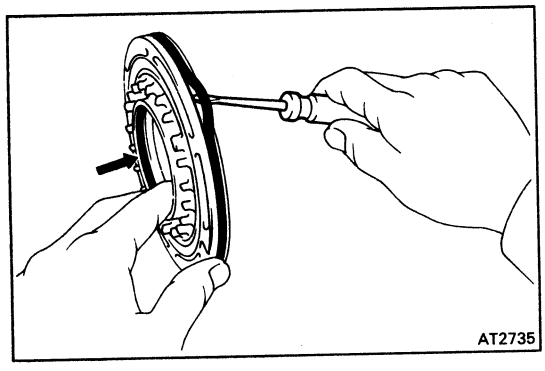

(b) Remove the two O-rings from the piston.

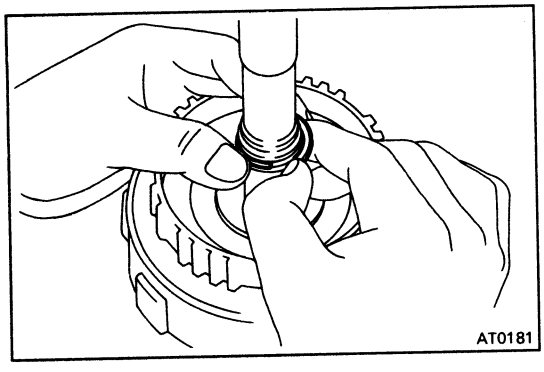

6. IF NECESSARY, REMOVE OIL SEAL RINGS

Remove the two oil seal rings from the shaft.

INSPECTION OF FORWARD CLUTCH

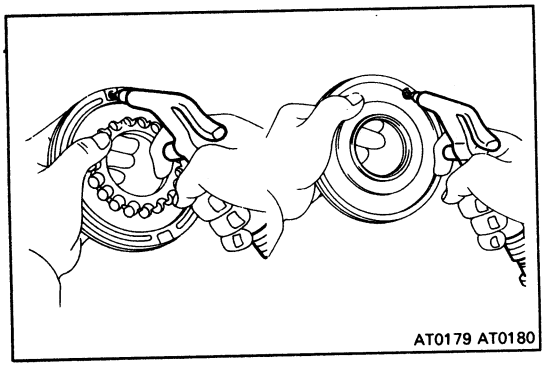

1. INSPECT CLUTCH PISTON

(a) Check that the check ball is free by shaking the piston.

(b) Check that the valve does not leak by applying low-pressure compressed air.

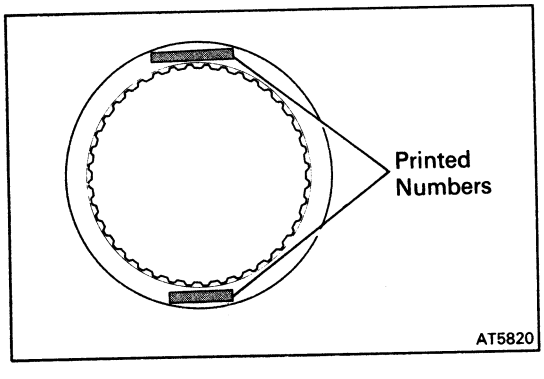

2. INSPECT DISC, PLATE AND FLANGE

Check if the sliding surface of the discs, plates and flanges are worn or burnt. If necessary, replace them.

HINT:

- If the lining of the disc is exfoliated or discolored, or even a part of the printed numbers are defaced, replace all discs.
- Before assembling new discs, soak them in ATF for at least two hours.

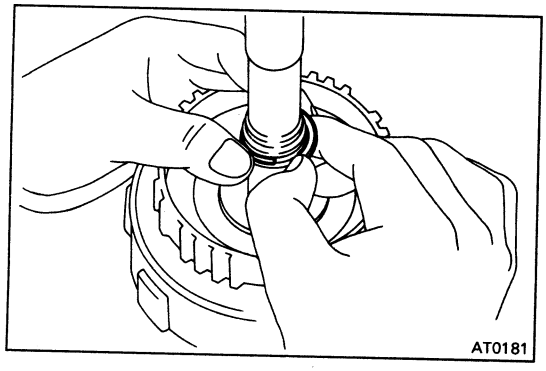

ASSEMBLY OF FORWARD CLUTCH

1. INSTALL OIL SEAL RINGS

Install the two oil seal rings to the shaft.

NOTICE: Do not spread the ring ends more than necessary.

HINT: After installing the oil seal rings, check that they move smoothly.

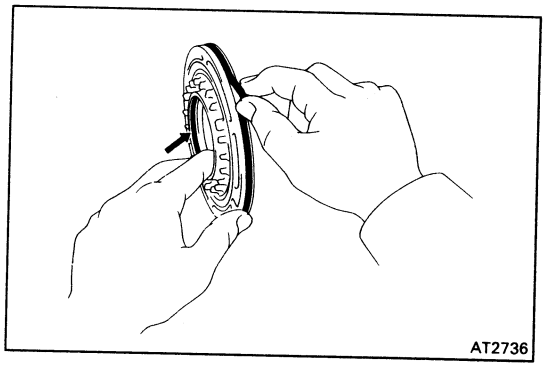

2. INSTALL CLUTCH PISTON TO CLUTCH DRUM

(a) Install the two new O-rings to the piston.

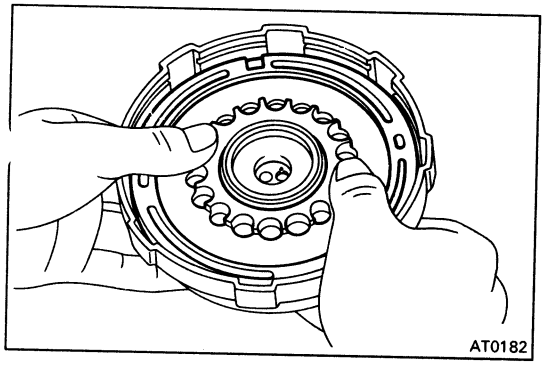

(b) Coat the O-rings with ATF.

(c) Press the piston into the drum with the cup side up, being careful not to damage the O-ring.

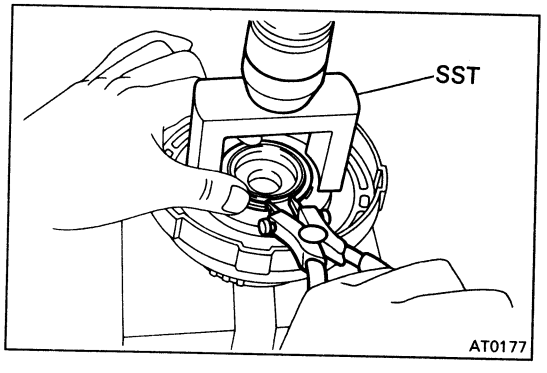

3. INSTALL PISTON RETURN SPRINGS

(a) Place the eighteen springs, spring retainer and snap ring onto the piston.

(b) Place SST on the spring retainer, and compress the springs with a shop press.

SST 09350-32014 (09351-32070)

(c) Install the snap ring with snap ring pliers.
Be sure the end gap of the snap ring is not aligned with the spring retainer claw.

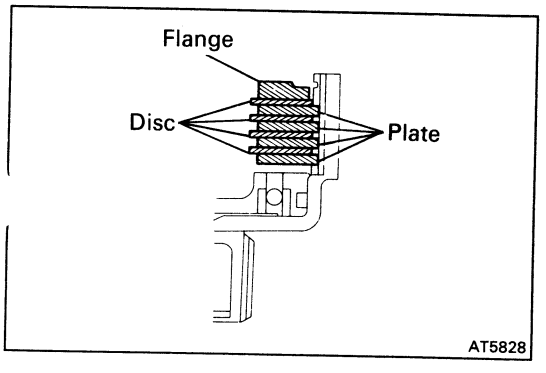

4. INSTALL PLATES, DISCS AND FLANGE

(a) Install the plates and discs.

Install in order: P = Plate D = Disc
P – D – P – D – P – D – P – D

(b) Install the flange with the flat end facing downward.

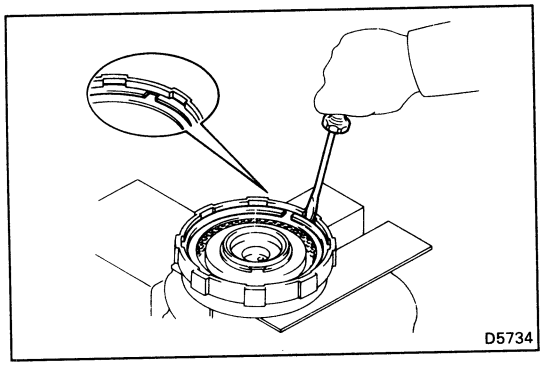

5. INSTALL SNAP RING

Check that the end gap of snap ring is not aligned with one of the cutouts.

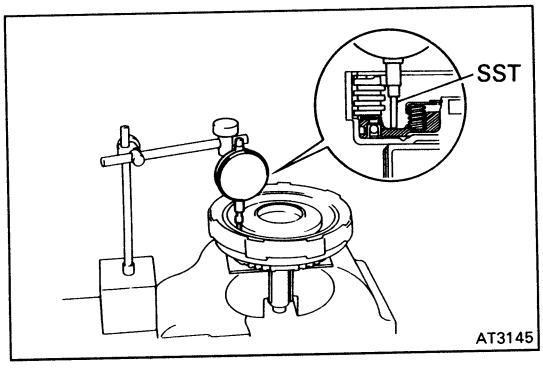

6. RECHECK PISTON STROKE OF FORWARD CLUTCH

Using a dial indicator (long type pick or SST), measure the forward clutch piston stroke applying and releasing the compressed air (4 – 8 kg/cm^2, 57 – 114 pis, 392 – 785 kPa) as shown.

SST 09350-32014 (09351-32190)

Piston stroke: 1.42 – 1.81 mm (0.0559 – 0.0713 in.)

If the piston stroke is nonstandard, select another flange.

HINT: There are two different thicknesses for the flange.

Flange thickness: 3.00 mm (0.1181 in.)
3.37 mm (0.1327 in.)

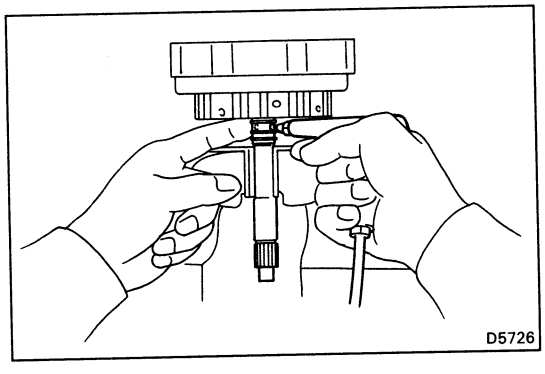

Front Planetary Gear

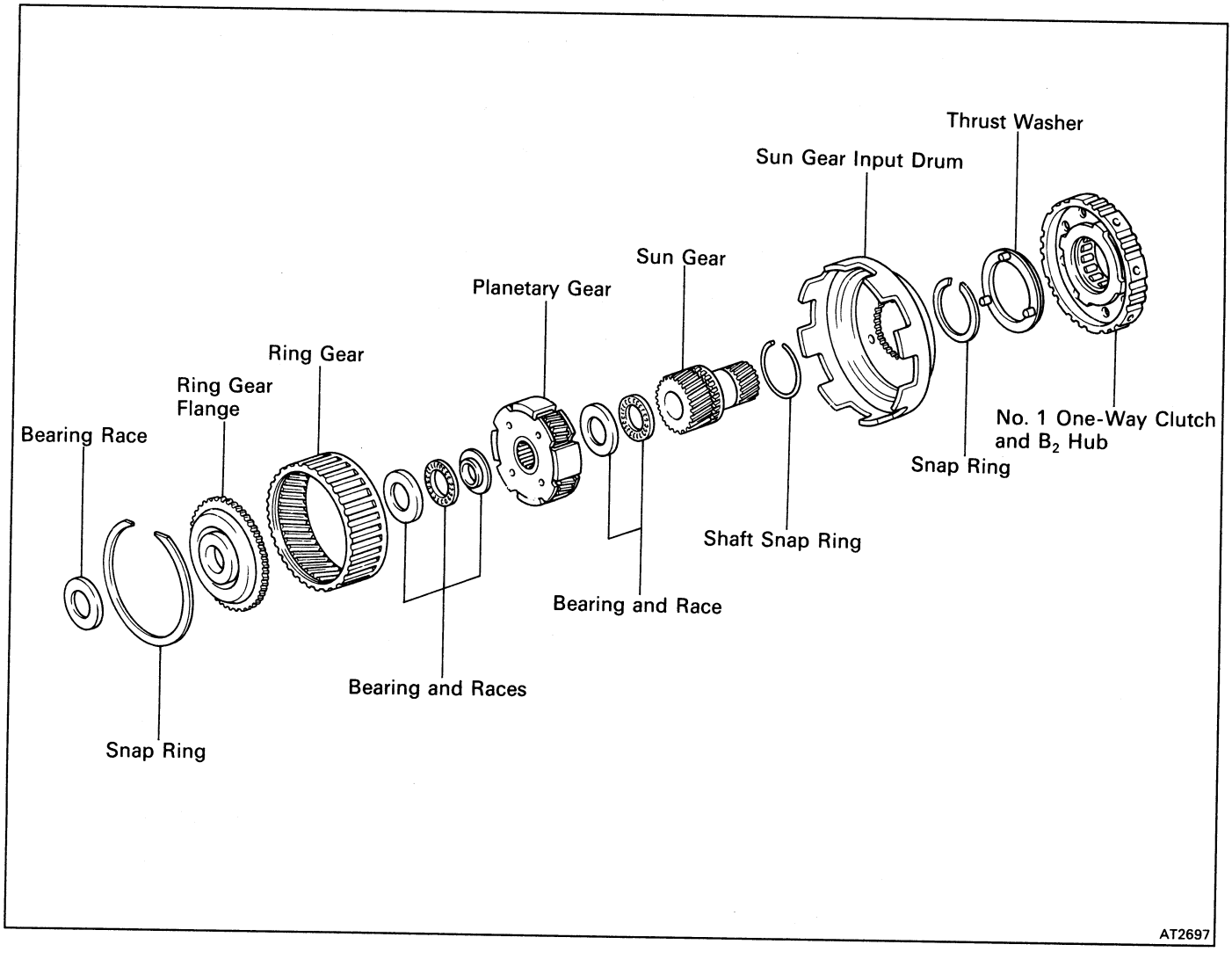

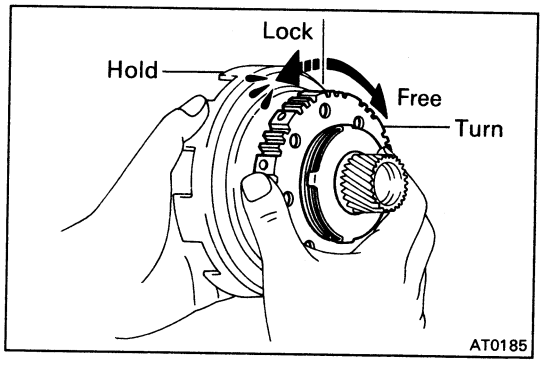

DISASSEMBLY OF ONE-WAY CLUTCH AND SUN GEAR

1. **CHECK OPERATION OF ONE-WAY CLUTCH**

   Hold the sun gear and turn the hub. The hub should turn freely clockwise and should lock counterclockwise.

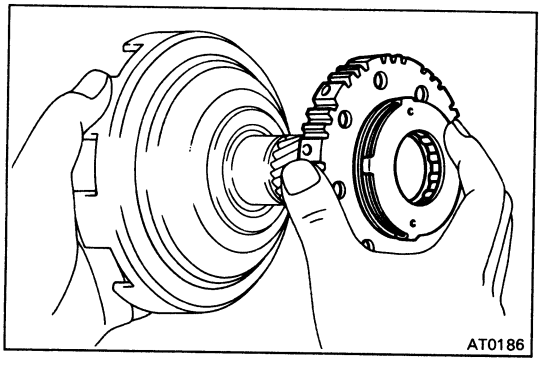

2. **REMOVE SECOND BRAKE HUB AND ONE-WAY CLUTCH FROM SUN GEAR**

   While turning the hub clockwise, remove the one-way clutch from the sun gear.

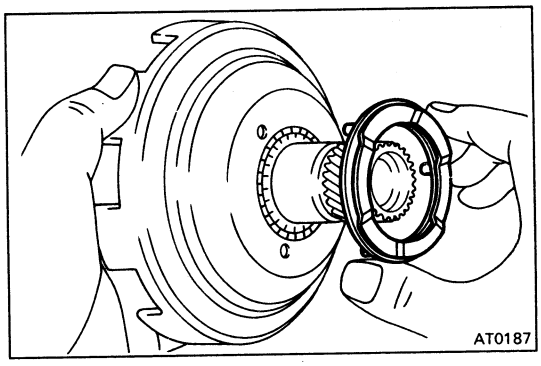

3. **REMOVE THRUST WASHER FROM SUN GEAR INPUT DRUM**

4. **REMOVE SUN GEAR FROM DRUM**
   (a) Using the snap ring pliers, remove the snap ring from the drum.
   (b) Remove the sun gear from the drum.

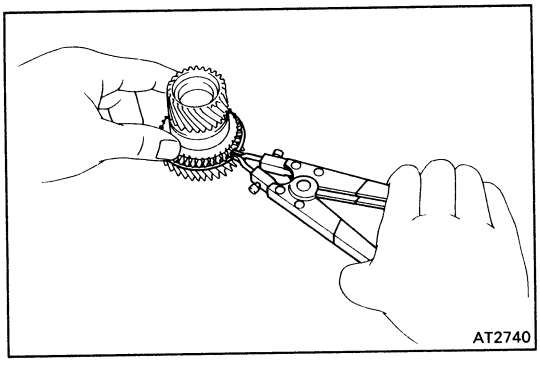

5. **REMOVE SHAFT SNAP RING**
   Using the snap ring pliers, remove the shaft snap ring from the sun gear.

INSPECTION OF SUN GEAR

INSPECT SUN GEAR FLANGE BUSHING

Using a dial indicator, measure the inside diameter of the sun gear.

Standard inside diameter:	**22.025 – 22.046 mm (0.8671 – 0.8680 in.)**
Maximum diameter:	**22.096 mm (0.8699 in.)**

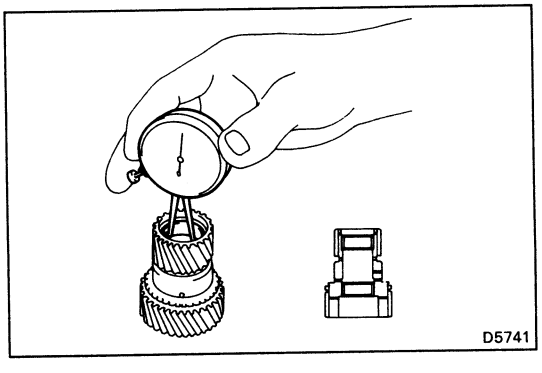

ASSEMBLY OF ONE-WAY CLUTCH AND SUN GEAR

1. **INSTALL SHAFT SNAP RING TO SUN GEAR**

2. **INSTALL SUN GEAR TO DRUM**
   (a) Install the sun gear to the drum.
   (b) Using the snap ring pliers, install the snap ring to the drum.

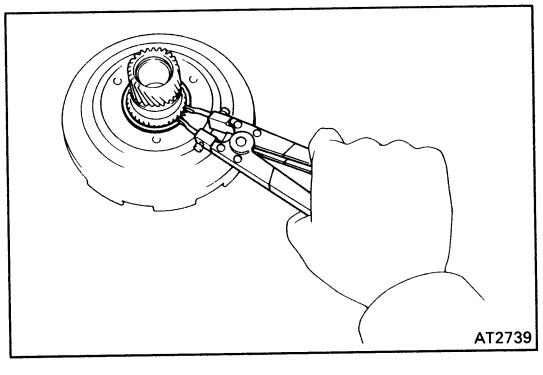

3. **INSTALL THRUST WASHER TO SUN GEAR INPUT DRUM**

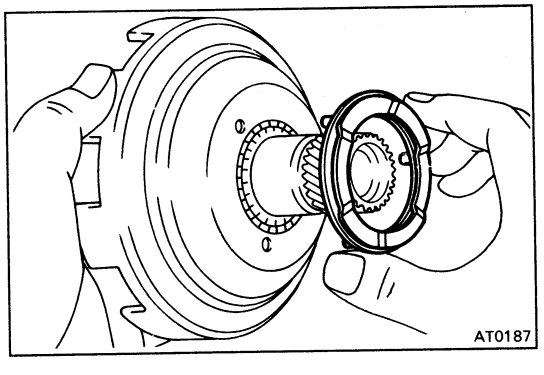

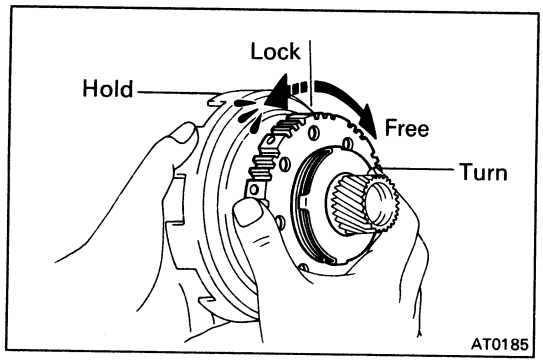

4. **INSTALL ONE-WAY CLUTCH AND SECOND BRAKE HUB ON SUN GEAR**

While turning the hub clockwise, slide the one-way clutch onto the sun gear.

5. **RECHECK OPERATION OF ONE-WAY CLUTCH**

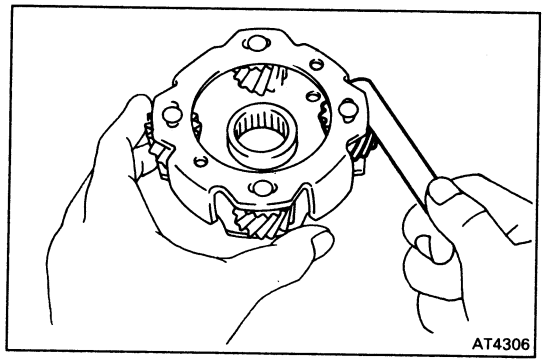

INSPECTION OF FRONT PLANETARY GEAR

MEASURE PLANETARY PINION GEAR THRUST CLEARANCE

Using a feeler gauge, measure the planetary pinion gear thrust clearance.

Standard clearance: 0.2 – 0.5 mm (0.008 – 0.020 in.)
Maximum clearance: 0.5 mm (0.020 in.)

If the clearance is greater than the maximum, replace the planetary gear assembly.

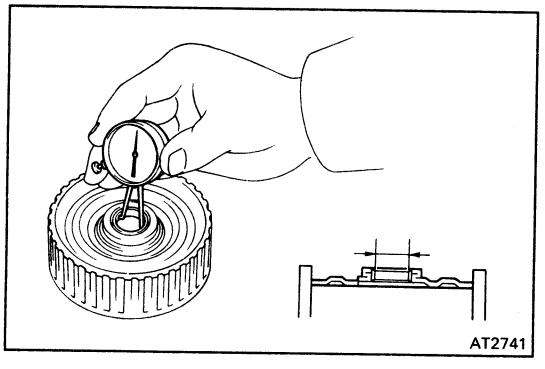

INSPECTION OF PLANETARY RING GEAR

1. **INSPECT RING GEAR FLANGE BUSHING**

Using a dial indicator, measure the inside diameter of the flange bushing.

Standard inside diameter: 19.025 – 19.050 mm (0.7490 – 0.7500 in.)

If the inside diameter is greater than maximum, replace the flange.

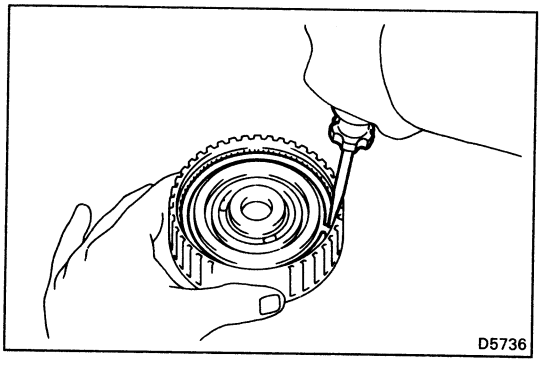

2. **REMOVE RING GEAR FLANGE**

(a) Using a screwdriver, remove the snap ring.
(b) Remove the flange from the ring gear.

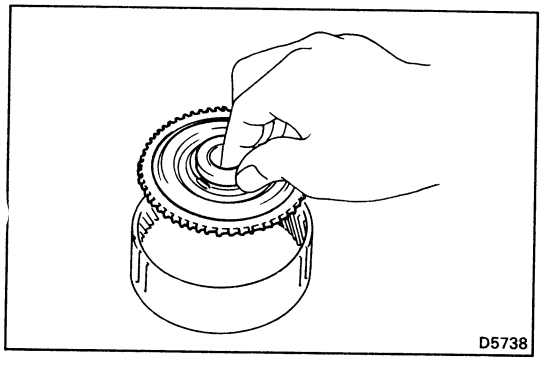

3. **INSTALL RING GEAR FLANGE**

(a) Position the flange onto the ring gear.
(b) Using a screwdriver, install the snap ring.

Second Brake

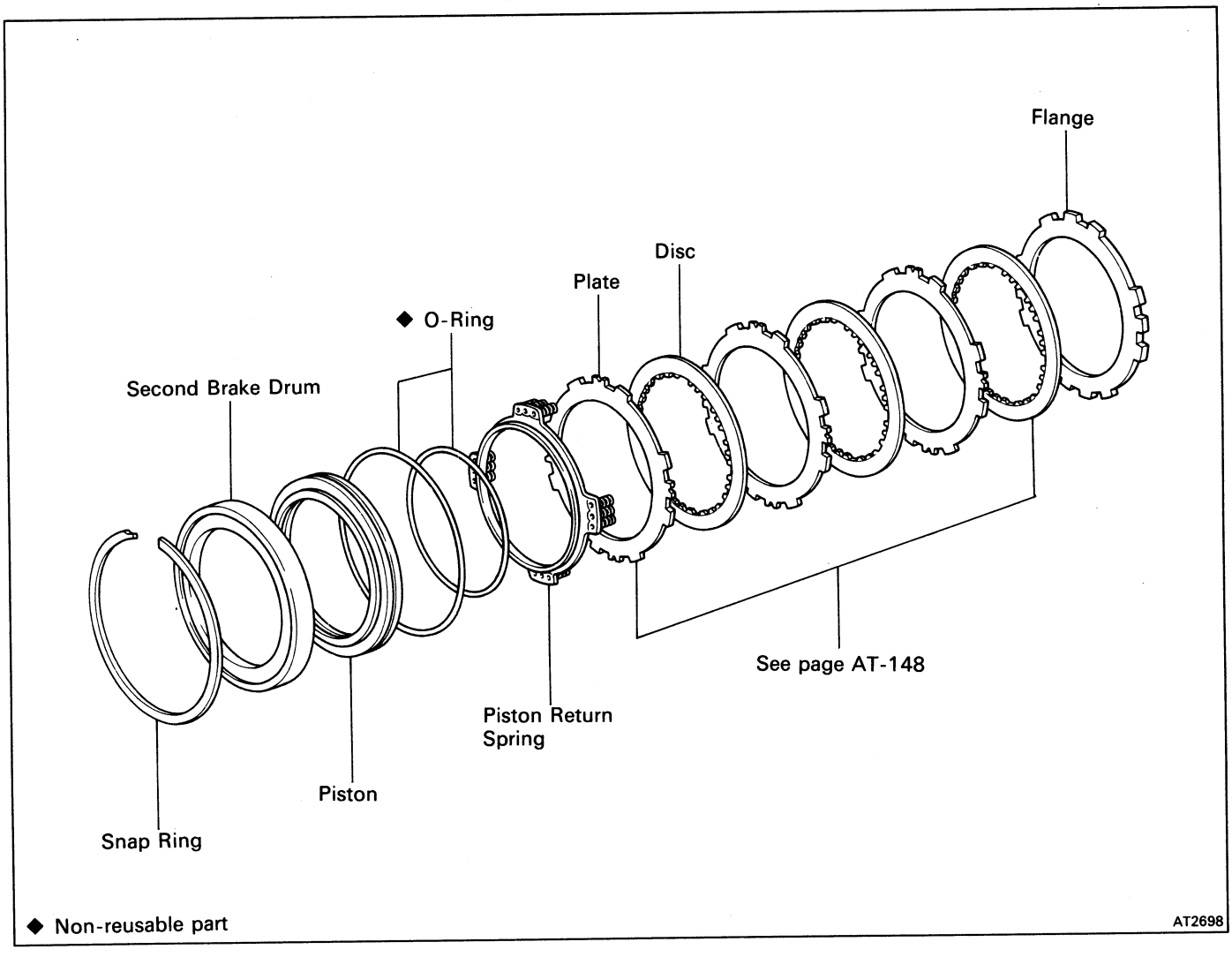

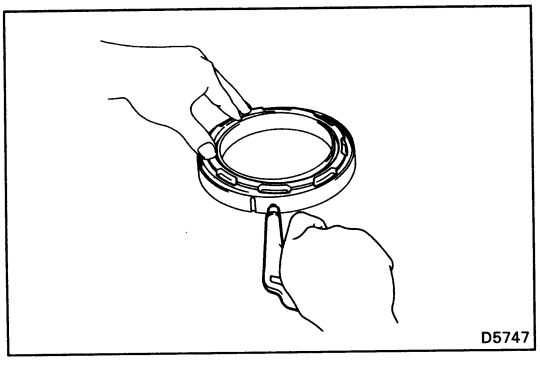

DISASSEMBLY OF SECOND BRAKE PISTON

REMOVE SECOND BRAKE PISTON

(a) Apply compressed air to the oil hole to remove the piston.

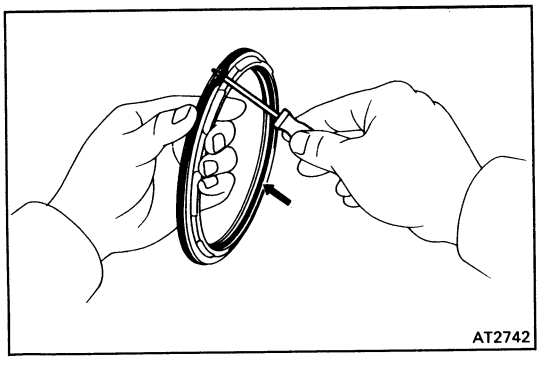

(b) Remove the two O-rings from the piston.

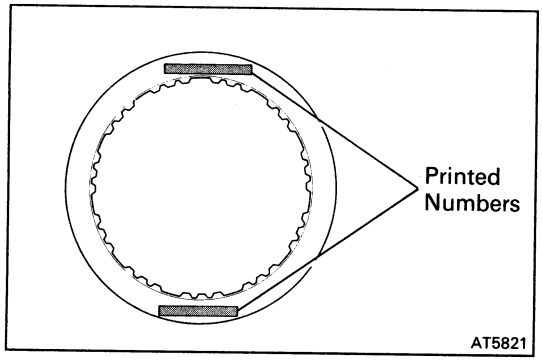

INSPECTION OF SECOND BRAKE COMPONENT

INSPECT DISCS, PLATES AND FLANGE

Check if the sliding surface of the discs, plates and flanges are worn or burnt. If necessary, replace them.

HINT:

- If the lining of the disc is exfoliated or discolored, or even a part of the printed numbers are defaced, replace all discs.
- Before assembling new discs, soak them in ATF for at least two hours.

ASSEMBLY OF SECOND BRAKE PISTON

INSTALL PISTON

(a) Coat a new O-ring with ATF.

(b) Install the two O-rings on the piston.

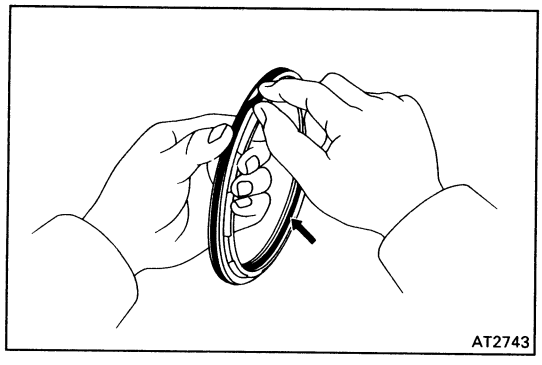

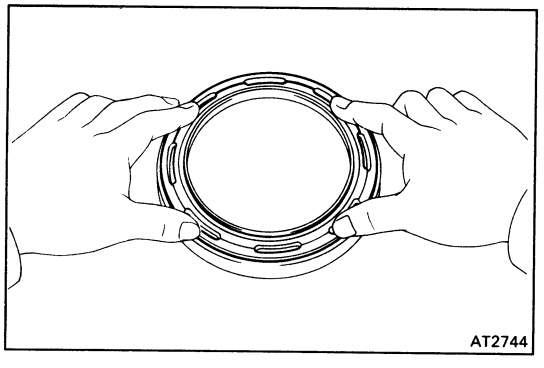

(c) Press the piston into the drum, being careful not to damage the O-rings.

Rear Planetary Gear

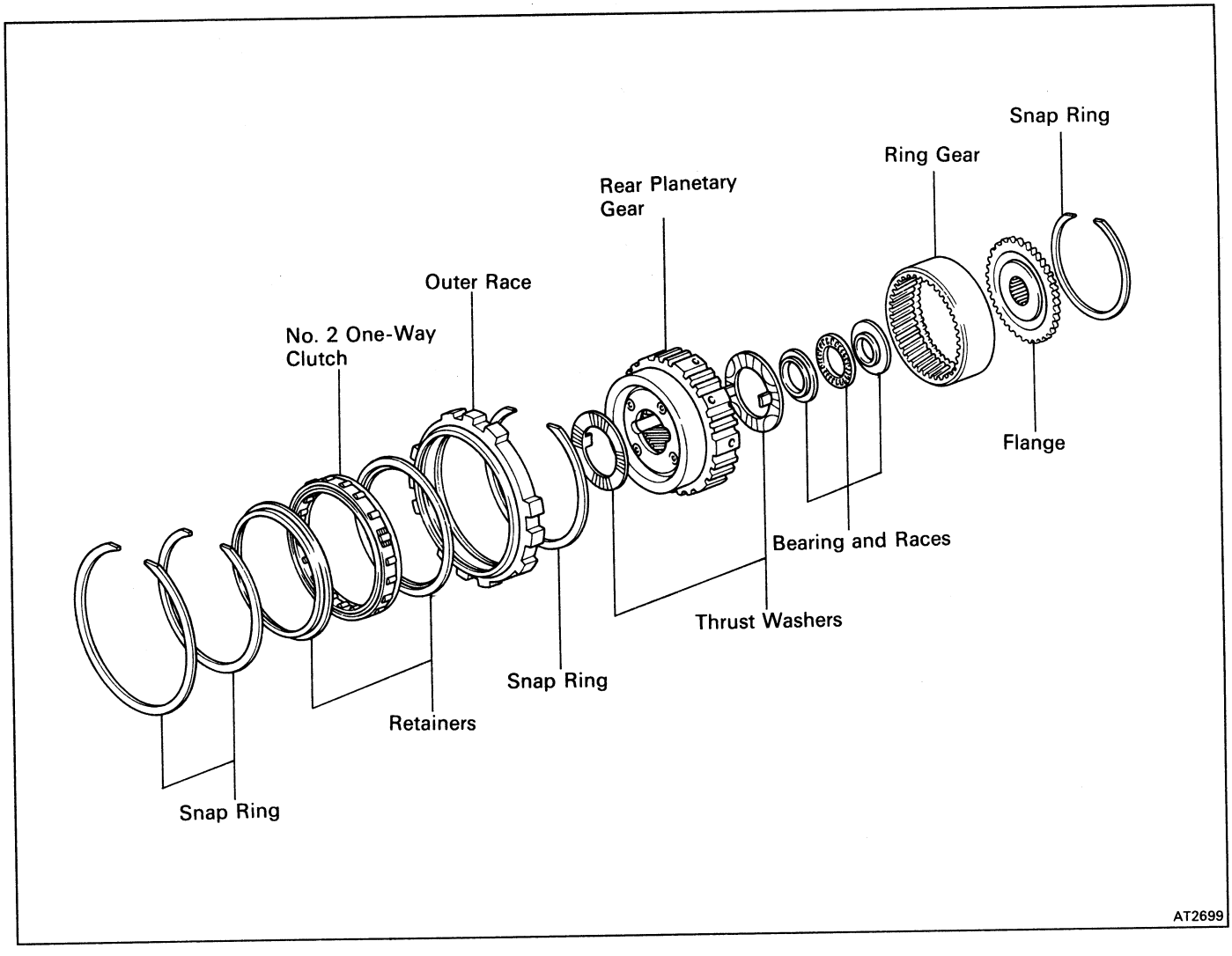

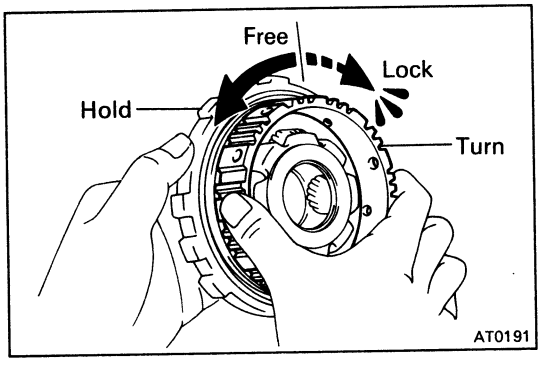

DISASSEMBLY OF ONE-WAY CLUTCH

1. **CHECK OPERATION OF ONE-WAY CLUTCH**

   Hold the outer race and turn the hub. The hub should turn freely counterclockwise and should lock clockwise.

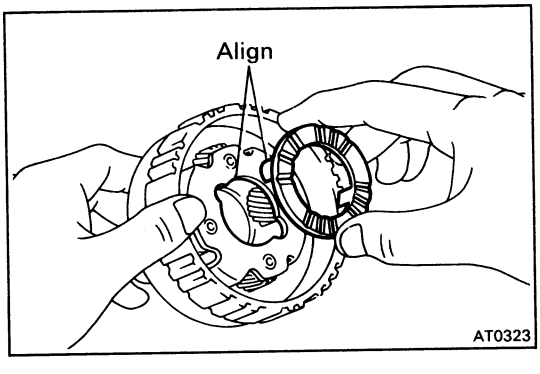

2. **REMOVE THRUST WASHERS**

   Remove the two thrust washers from the both sides of planetary gear.

3. **SEPARATE ONE-WAY CLUTCH AND PLANETARY GEAR**

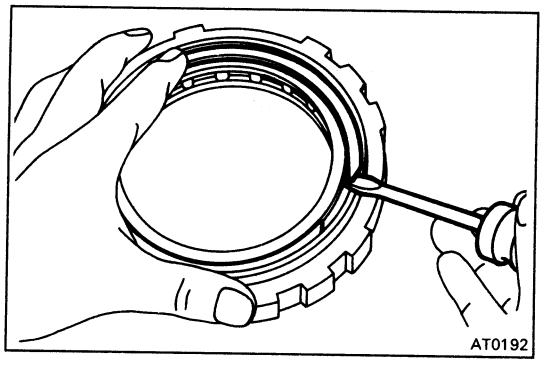

4. REMOVE ONE-WAY CLUTCH FROM OUTER RACE

(a) Remove the two snap rings and retainers from the both sides.

(b) Remove the one-way clutch from the outer race.

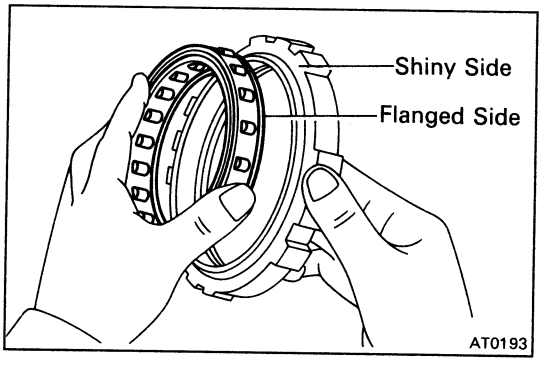

ASSEMBLY OF ONE-WAY CLUTCH

1. INSTALL ONE-WAY CLUTCH

(a) Install the one-way clutch into the outer race, facing the flanged side of the one-way clutch toward the shiny side of the outer race.

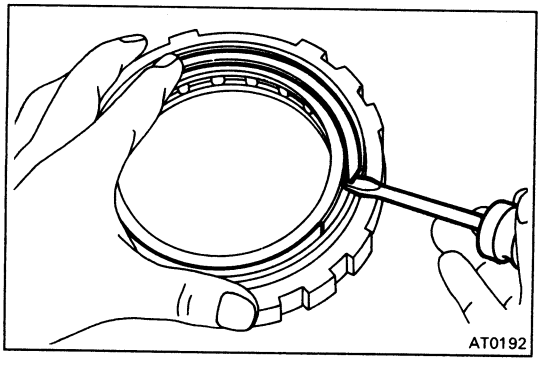

(b) Install the two retainers and snap rings to the both sides.

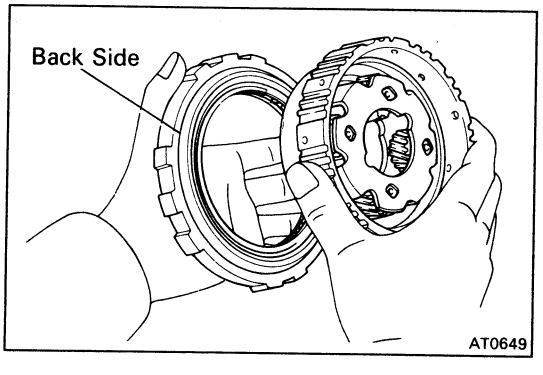

2. INSTALL PLANETARY GEAR INTO ONE-WAY CLUTCH

Install the planetary gear into the one-way clutch facing the inner race of the planetary gear toward the back side of the one-way clutch outer race.

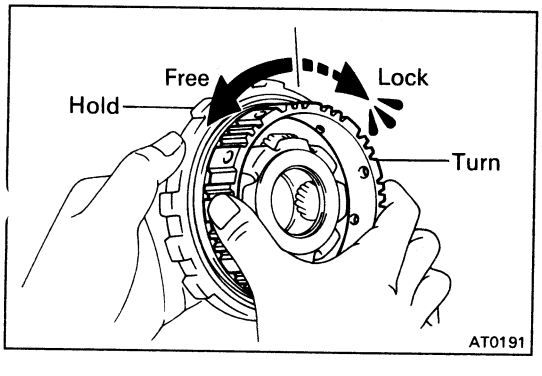

3. CHECK OPERATION OF ONE-WAY CLUTCH

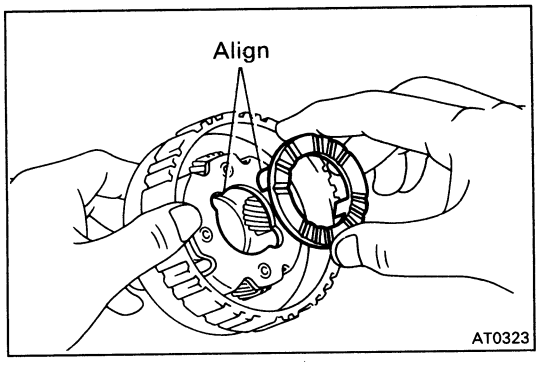

4. INSTALL THRUST WASHERS

(a) Coat the two thrust washers with petroleum jelly.

(b) Align the tab of the washers with the hollow of the carrier.

REPLACEMENT OF RING GEAR FLANGE

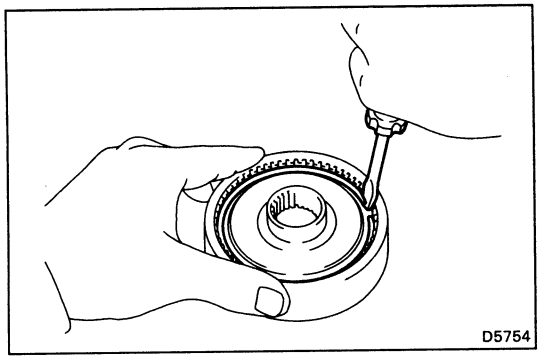

1. REMOVE RING GEAR FLANGE

(a) Using a screwdriver, remove the snap ring.

(b) Remove the flange from the ring gear.

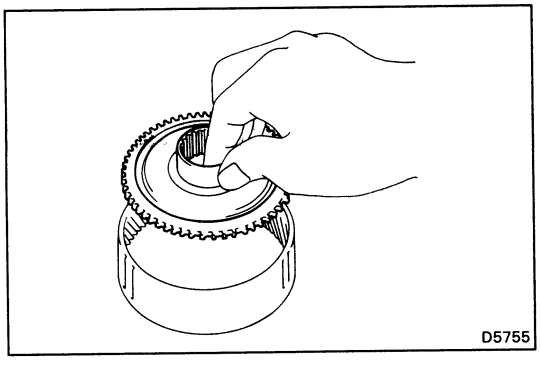

2. INSTALL RING GEAR FLANGE

(a) Position the flange into the ring gear.

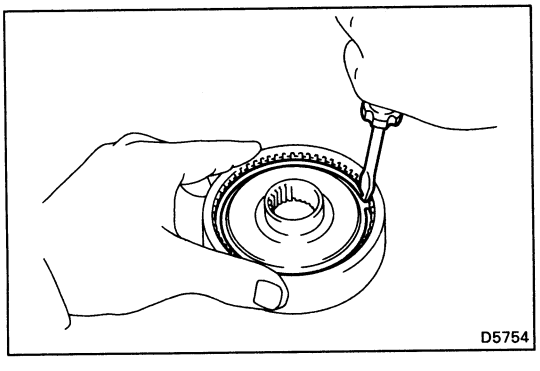

(b) Using a screwdriver, install the snap ring.

INSPECTION OF REAR PLANETARY GEAR

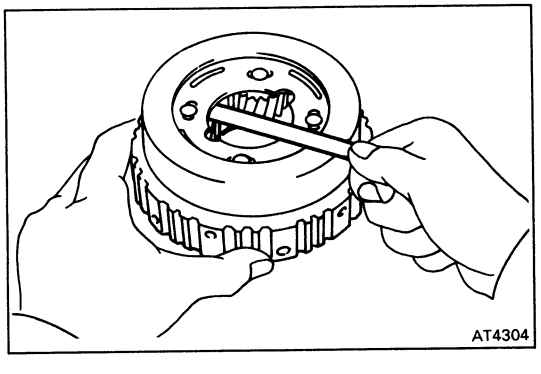

MEASURE PLANETARY PINION GEAR THRUST CLEARANCE

Using a feeler gauge, measure the planetary pinion gear thrust clearance.

Standard clearance: 0.2 – 0.5 mm (0.008 – 0.020 in.)
Maximum clearance: 0.5 mm (0.020 in.)

If the clearance is greater than maximum, replace the planetary gear assembly.

First and Reverse Brake

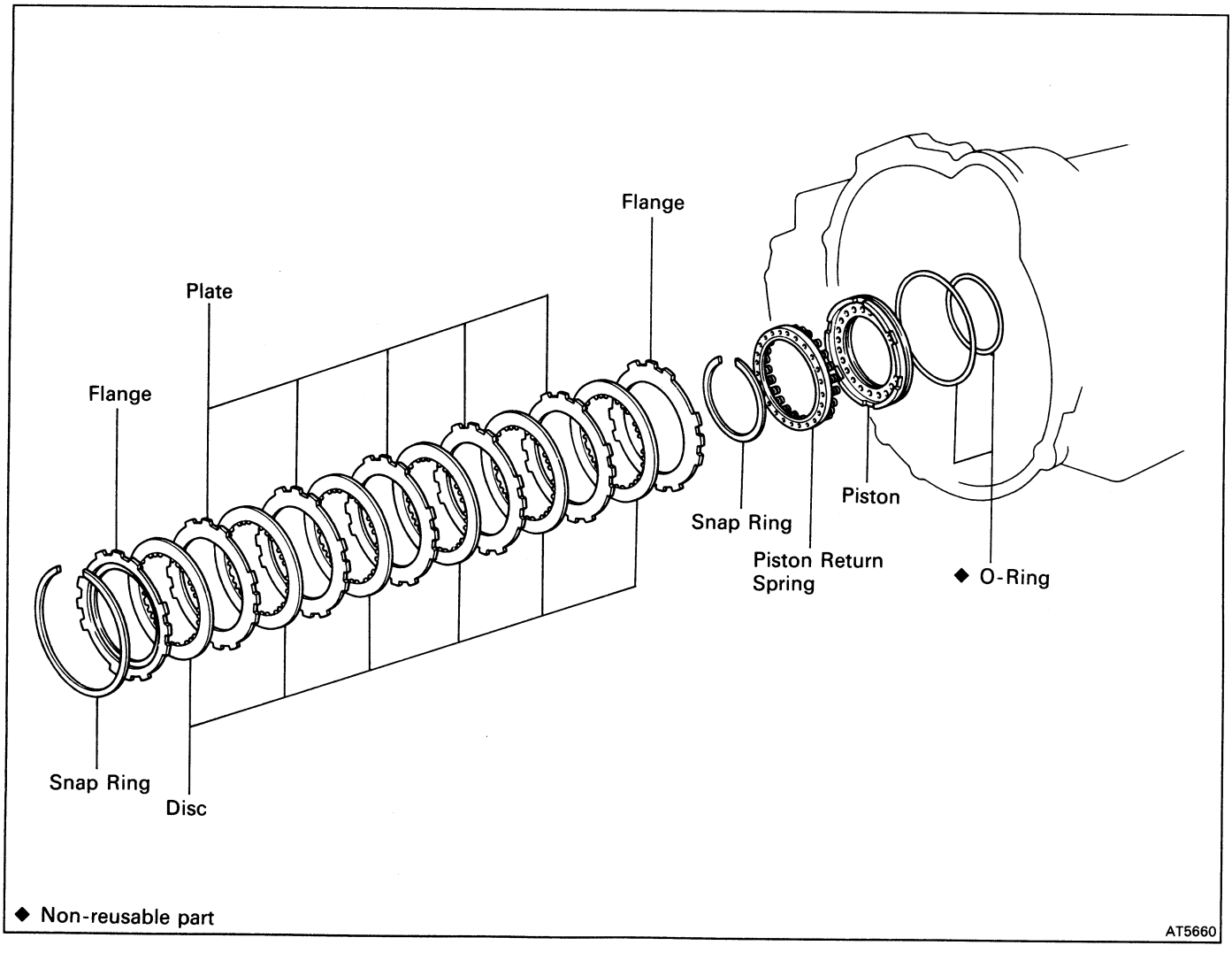

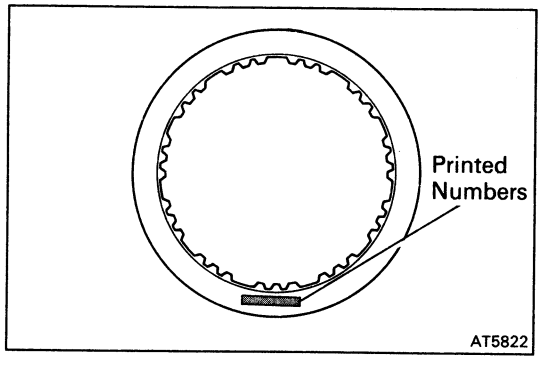

INSPECTION OF FIRST AND REVERSE BRAKE COMPONENT

INSPECT DISCS, PLATE AND FLANGE

Check if the sliding surface of the discs, plates and flanges are worn or burnt. If necessary, replace them.

HINT:

- If the lining of the disc is exfoliated or discolored, or even a part of the printed number is defaced, replace all discs.
- Before assembling new discs, soak them in ATF for at least two hours.

Intermediate Shaft

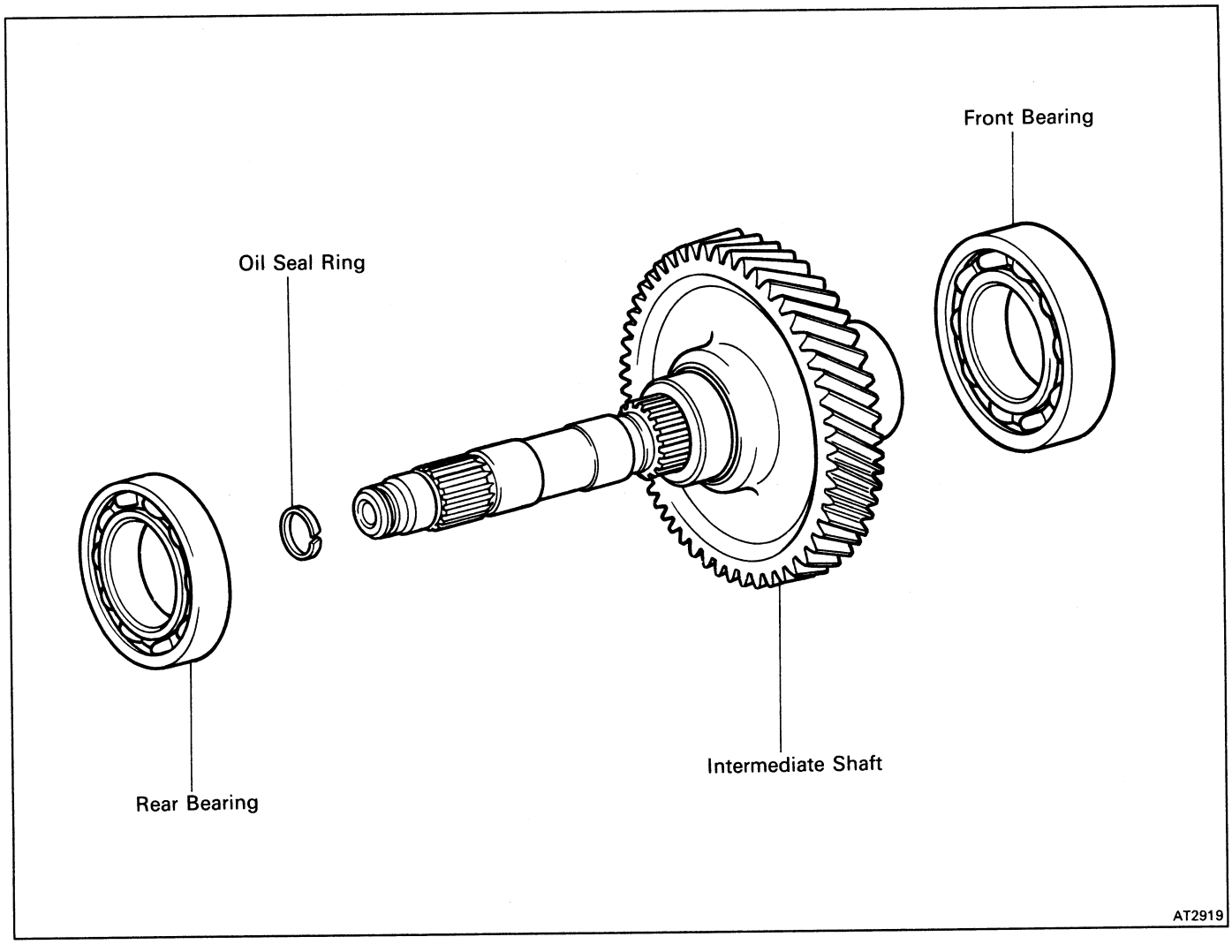

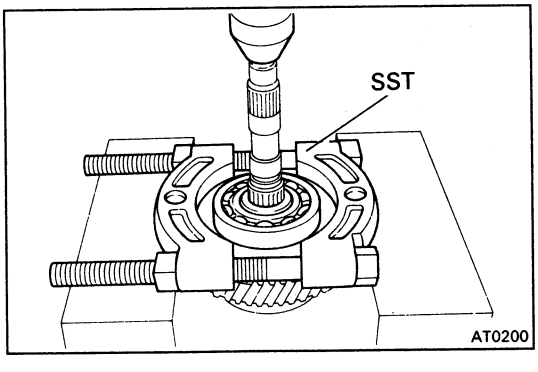

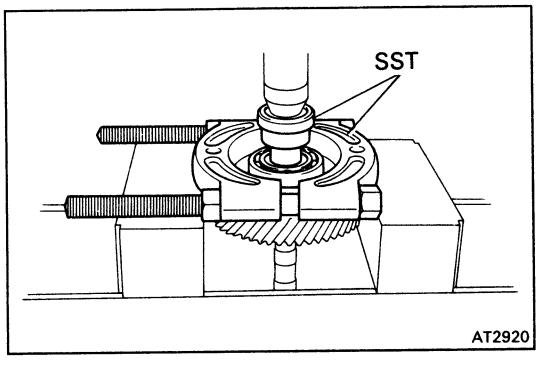

DISASSEMBLY OF INTERMEDIATE SHAFT

1. **REMOVE INTERMEDIATE SHAFT FRONT BEARING**
   Using SST and press, press out the bearing.
   SST 09555-55010

2. **REMOVE INTERMEDIATE REAR BEARING**
   Using SST and press, press out the bearing.
   SST 09350-32014 (09351-32090) and 09555-55010

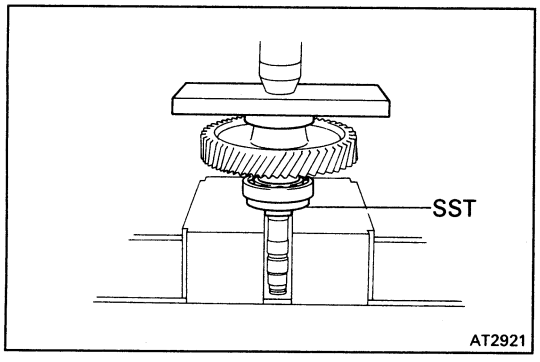

ASSEMBLY OF INTERMEDIATE SHAFT

1. INSTALL INTERMEDIATE SHAFT FRONT BEARING

(a) Using SST and press, press in a new bearing.

SST 09350-32014 (09351-32120)

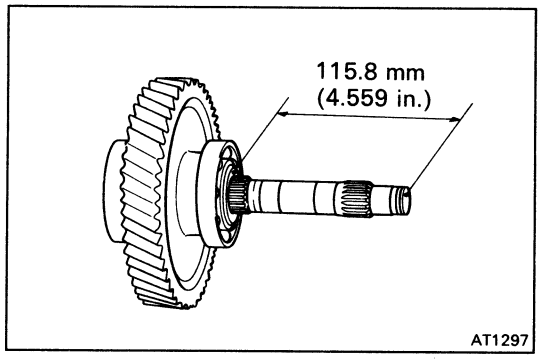

(b) Check that the distance from the gear flange end to the intermediate shaft end is 115.8 mm (4.559 in.).

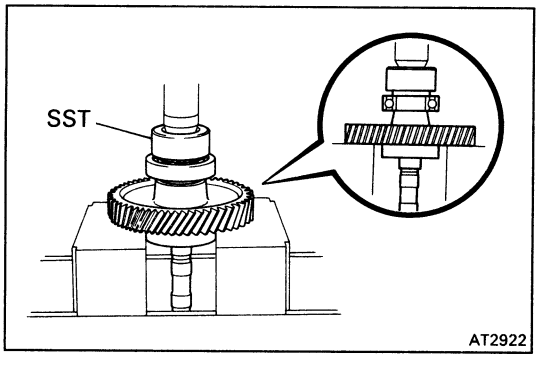

2. INSTALL INTERMEDIATE SHAFT REAR BEARING

Using SST and press, press in a new bearing.

SST 09350-32014 (09351-32150)

Counter Shaft

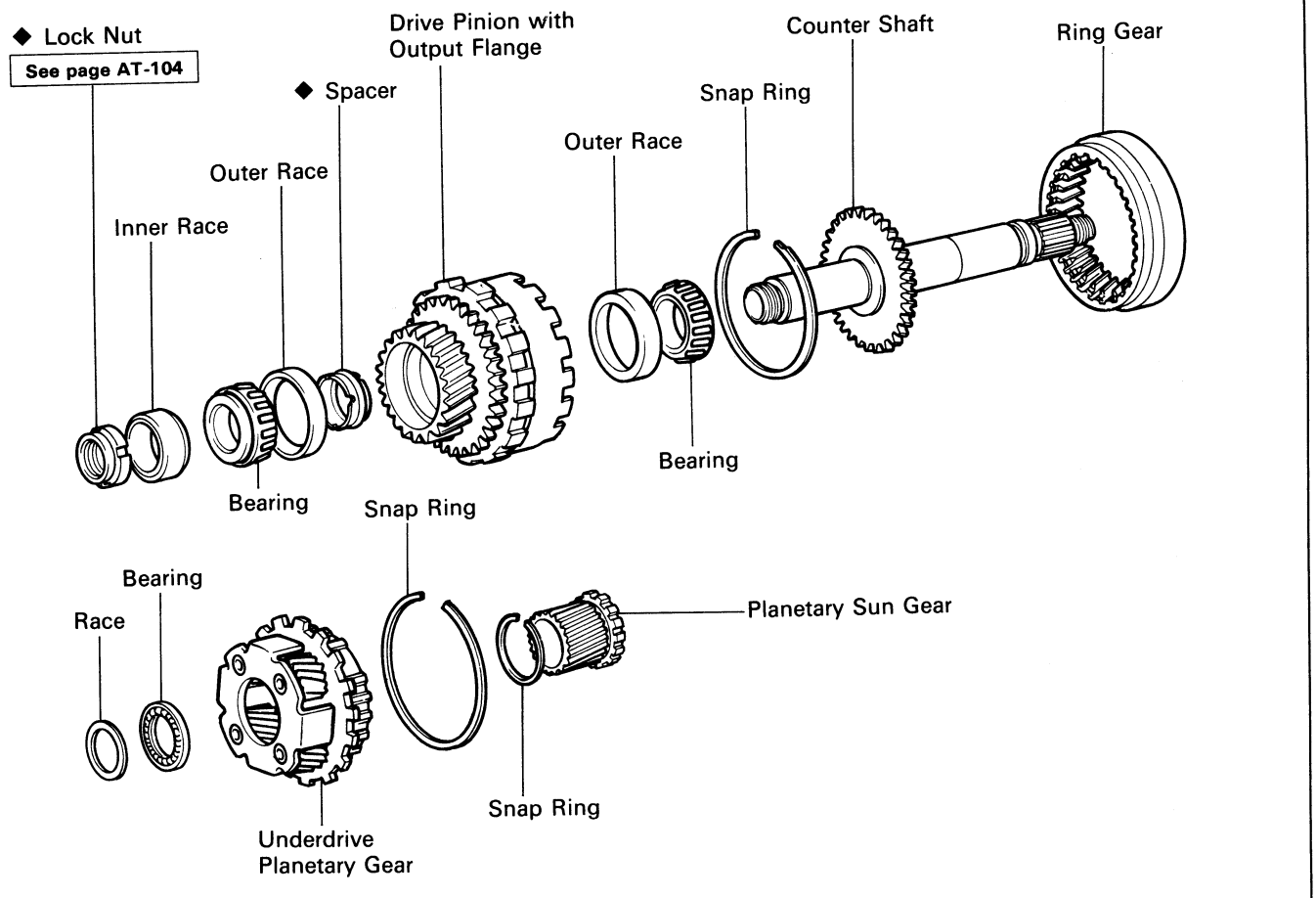

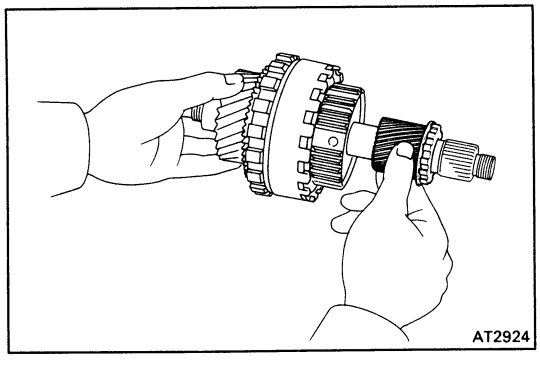

DISASSEMBLY OF COUNTER SHAFT

1. REMOVE UNDERDRIVE PLANETARY SUN GEAR FROM COUNTER SHAFT

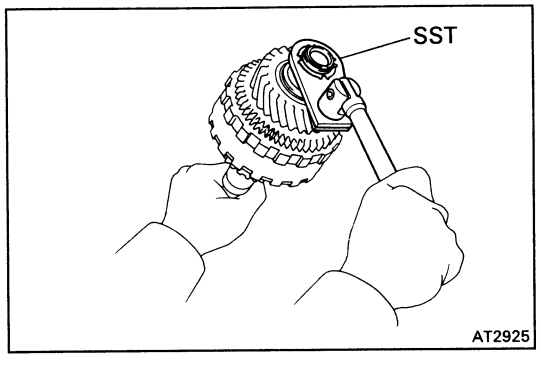

2. MEASURE STARTING TORQUE OF COUNTER SHAFT

(a) Using SST, temporarily tighten the lock nut.

SST 09350-32014 (09351-32170)

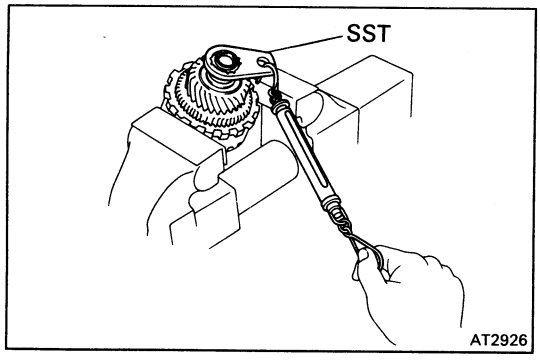

(b) Using soft jaws, hold the drive pinion in a vise.

(c) Using SST and spring tension gauge, measure the starting torque of the counter shaft.

SST 09350-32014 (09351-32170)

Starting torque: **with spring tension gauge**
1.2 – 2.0 kg (2.6 – 4.4 lb)
with torque gauge
(hexagon nut side)
New bearing 6 – 10 kg-cm
(5.2 – 8.7 in.-lb, 0.6 – 1.0 N·m)
Reused bearing 3 – 5 kg-cm
(2.6 – 4.3 in.-lb, 0.3 – 0.5 N·m)

If the torque is exceeded, replace the spacer.

(d) Using SST, remove the lock nut.

SST 09350-32014 (09351-32170)

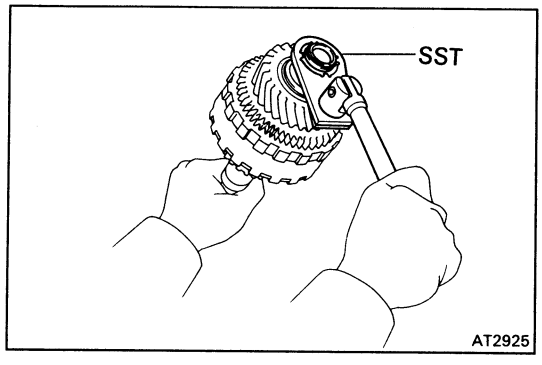

3. REMOVE SNAP RING FROM SUN GEAR

Using snap ring pliers, remove the snap ring from the sun gear.

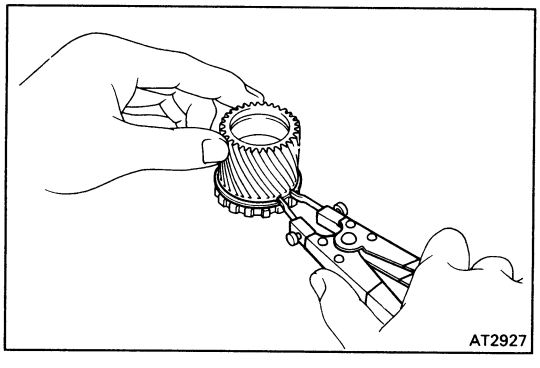

4. REMOVE SNAP RING FROM COUNTER SHAFT ASSEMBLY

Using a screwdriver, remove the snap ring from the counter shaft assembly.

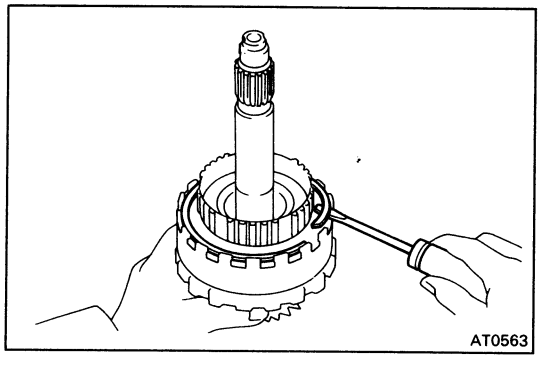

5. REMOVE UNDERDRIVE PLANETARY GEAR

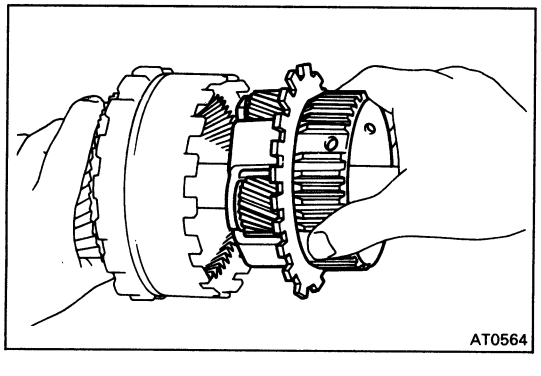

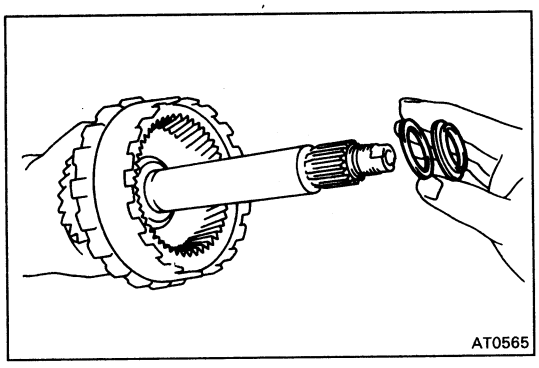

6. **REMOVE THRUST NEEDLE ROLLER BEARING AND RACE**

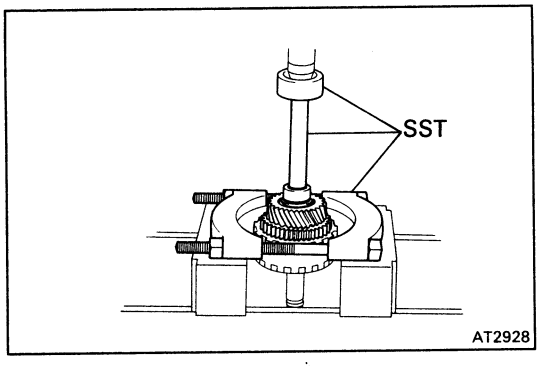

7. **REMOVE DRIVE PINION WITH OUTPUT FLANGE, BEARING, INNER RACE AND SPACER**

(a) Using SST and press, remove the drive pinion with output flange, bearing and inner race.

SST 09350-32014 (09351-32150, 09351-32130), 09555-55010

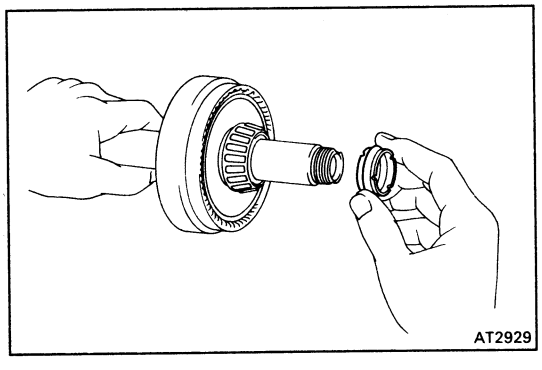

(b) Remove the spacer from the counter shaft.

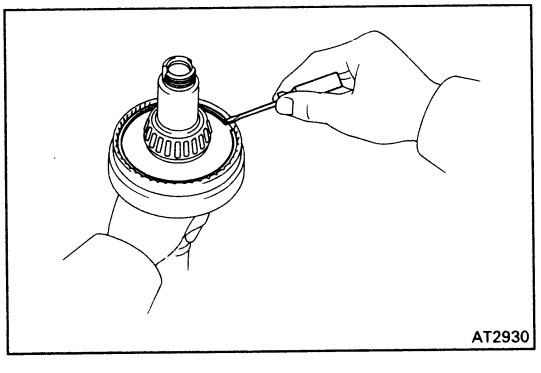

8. **REMOVE RING GEAR**

(a) Using a screwdriver, remove the snap ring from the counter shaft.

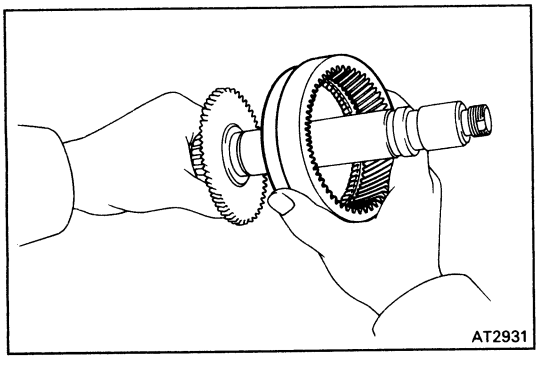

(b) Remove the ring gear from the counter shaft.

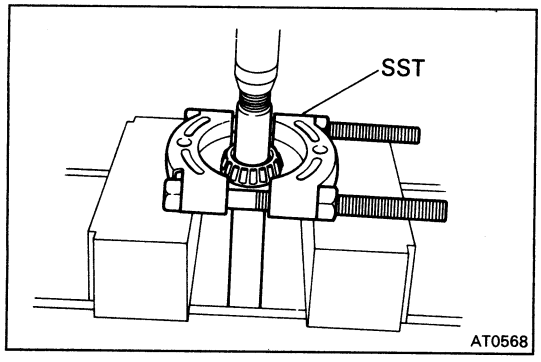

9. REMOVE BEARING

Using SST and press, remove the bearing

SST 09950-00020

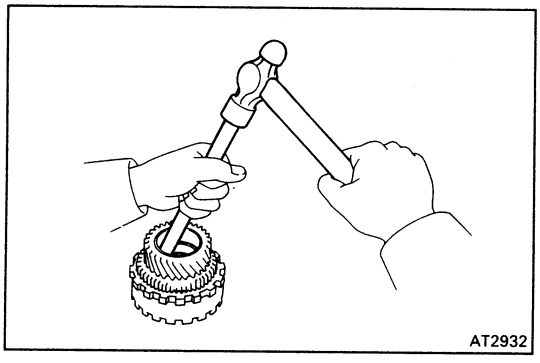

10. REMOVE BEARING OUTER RACES

Using a brass bar and hammer, tap out both bearing outer races.

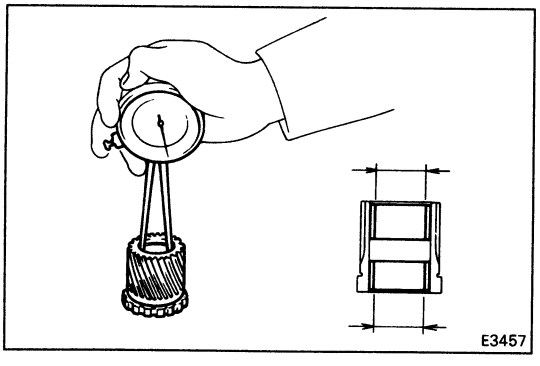

INSPECTION OF COUNTER SHAFT COMPONENTS

1. MEASURE PLANETARY SUN GEAR BUSHING INSIDE DIAMETER

Using a caliper gauge, measure the bushing inside diameter of the planetary sun gear as shown.

Standard inside diameter: 29.800 – 29.825 mm (1.1732 – 1.1742 in.)
Maximum inside diameter: 29.870 mm (1.1760 in.)

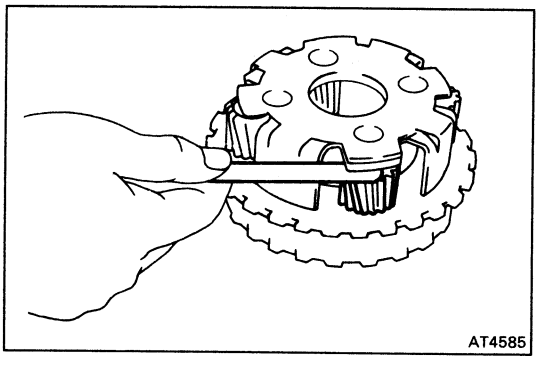

2. MEASURE PLANETARY PINION GEAR THRUST CLEARANCE

Using a feeler gauge, measure the planetary pinion gear thrust clearance.

Standard clearance: 0.2 – 0.5 mm (0.008 – 0.020 in.)
Maximum clearance: 0.5 mm (0.020 in.)

If the clearance is greater than the maximum, replace the planetary gear assembly.

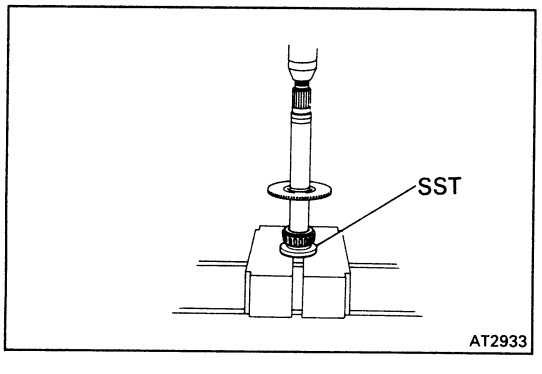

ASSEMBLY OF COUNTER SHAFT

1. INSTALL BEARING TO COUNTER SHAFT

Using SST and press, press in the bearing of the thick inner race side.

SST 09350-32014 (09351-32180)

2. INSTALL RING GEAR

(a) Install the ring gear to the counter shaft.

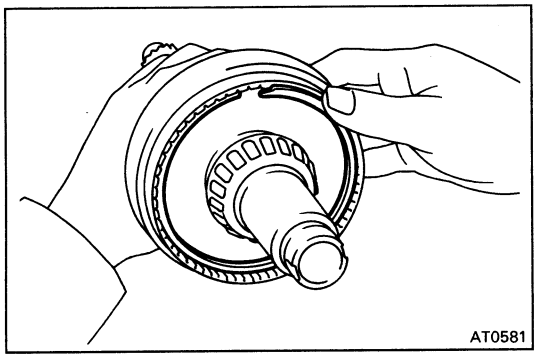

(b) Install the snap ring.

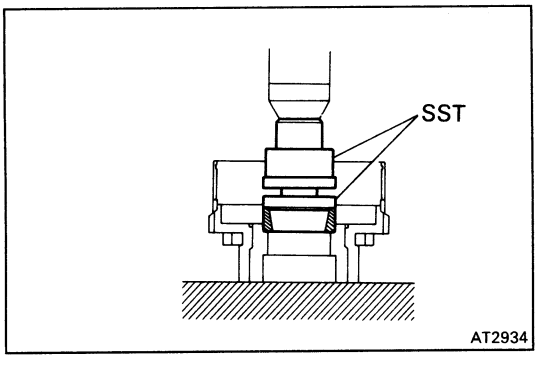

3. INSTALL BEARING OUTER RACES TO DRIVE PINION

(a) Using SST and press, press in the thick race to the flange side of the drive pinion.

SST 09350-32014 (09351-32090, 09351-32180)

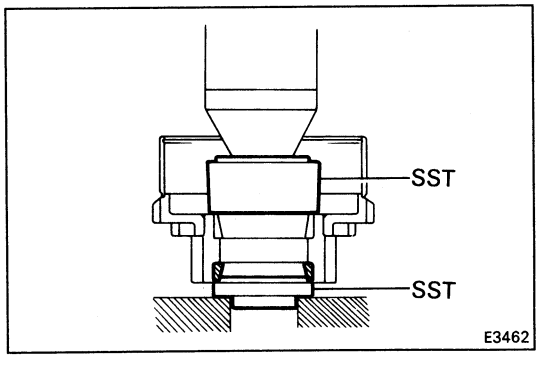

(b) Using SST and press, press in the thin race to the other side.

SST 09350-32014 (09351-32150, 09351-32180)

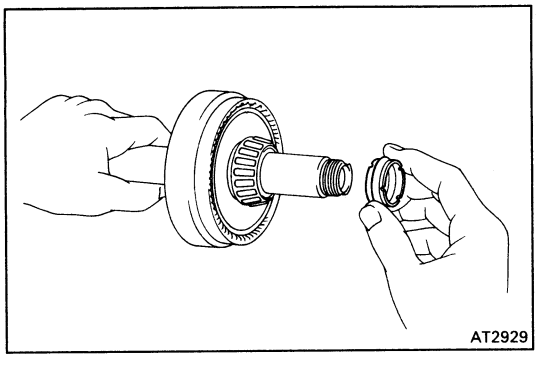

4. INSTALL DRIVE PINION TO COUNTER SHAFT

(a) Install the new spacer to the counter shaft.

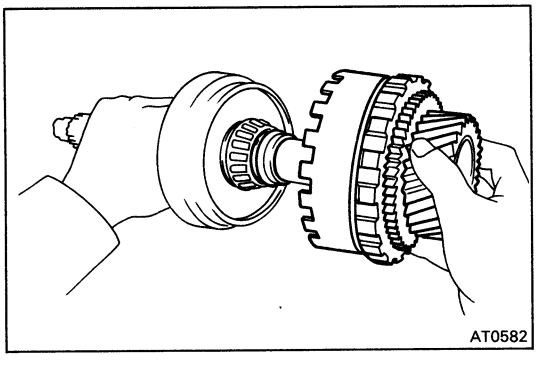

(b) Install the drive pinion to the counter shaft.

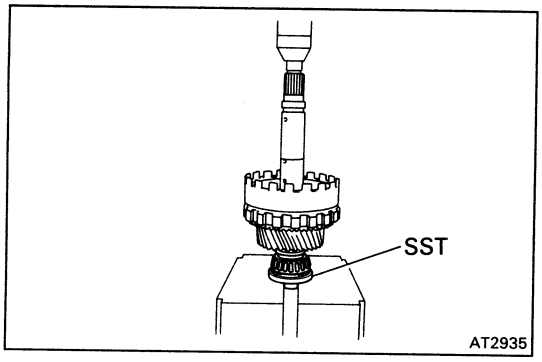

5. INSTALL ANOTHER BEARING TO COUNTER SHAFT

Using SST and press, press in the another bearing.

SST 09350-32014 (09351-32180)

NOTICE: Be sure there is some clearance between the output flange and bearing

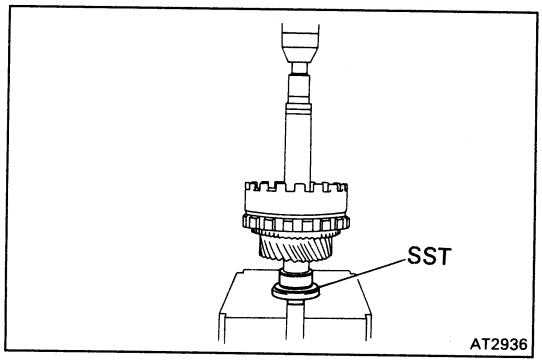

6. INSTALL BEARING INNER RACE

Using SST and press, press in the inner race.

SST 09350-32014 (09351-32180)

NOTICE: Be sure there is some clearance.

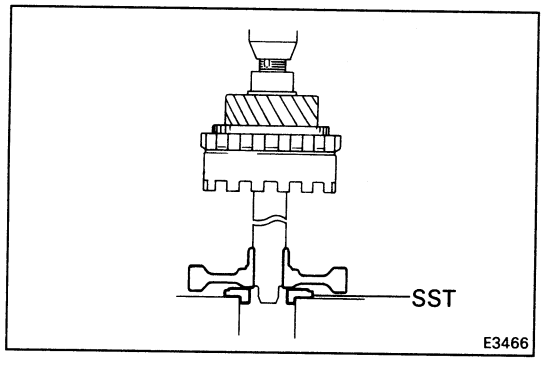

7. ADJUST COUNTER SHAFT STARTING TORQUE

(a) Using SST and press, press in the counter driven gear to the counter shaft.

SST 09350-32014 (09351-32100)

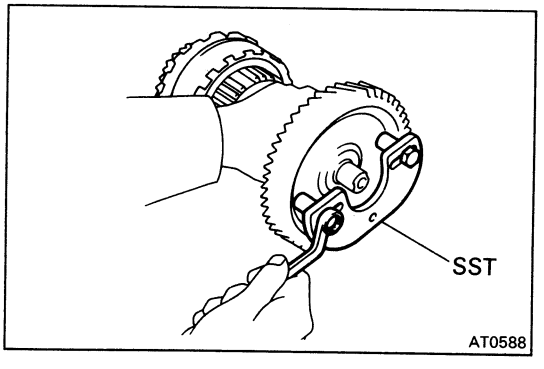

(b) Install SST to the driven gear.

SST 09350-32014 (09351-32032)

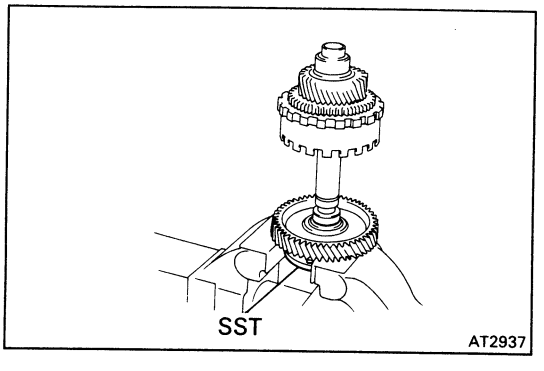

(c) Secure the counter shaft by holding the SST in a vise.

SST 09350-32014 (09351-32032)

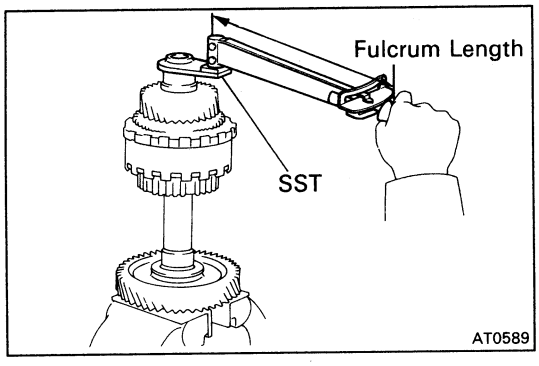

(d) Temporarily install the new lock nut, and using SST, tighten the lock nut until the counter shaft starting torque is in specification.

SST 09350-32014 (09351-32170)

Torque (Reference): 1,800 – 2,200 kg-cm (130 – 159 ft-lb, 177 – 216 N·m)

HINT: Use a torque wrench with a fulcrum length of 42 cm (16.54 in.).

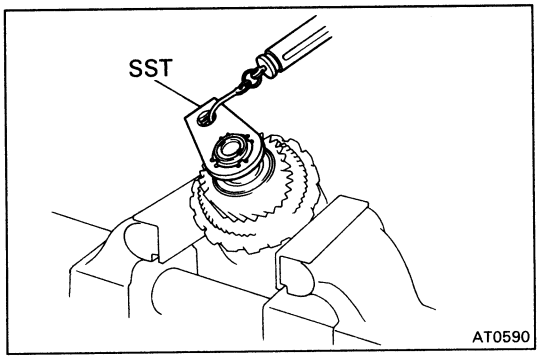

(e) Using soft jaws, hold the drive pinion in a vise.

(f) Using SST and spring tension gauge, measure the starting torque of the counter shaft.

SST 09350-32014 (09351-32170)

Starting torque: with tension gauge
1.2 – 2.0 kg (2.6 – 4.4 lb)
with torque gauge
(hexagon nut side)
New bearing 6 – 10 kg-cm
(5.2 – 8.7 in.-lb, 0.6 – 1.0 N·m)
Reused bearing 3 – 5 kg-cm
(2.6 – 4.3 in.-lb, 0.3 – 0.5 N·m)

If the starting torque is exceeded, replace the spacer and retorque.

HINT: Before measuring the starting torque, snug down the bearing by turning the counter shaft.

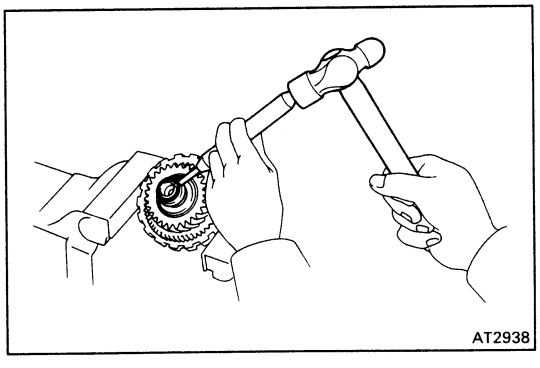

(g) Using a punch and hammer, stake the lock nut.

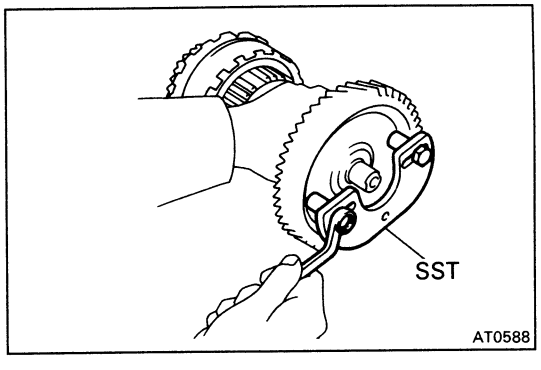

(h) Remove the SST from the counter driven gear.

SST 09350-32014 (09351-32032)

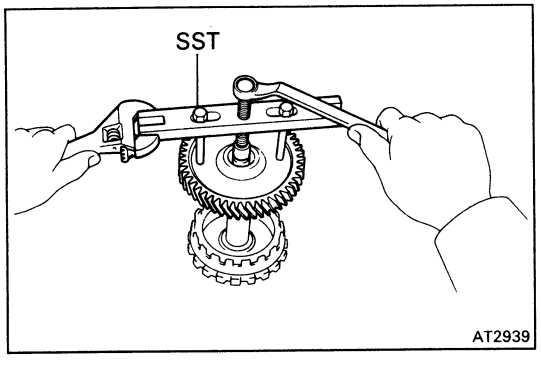

(i) Using SST, remove the counter driven gear.

SST 09350-32014 (09351-32061)

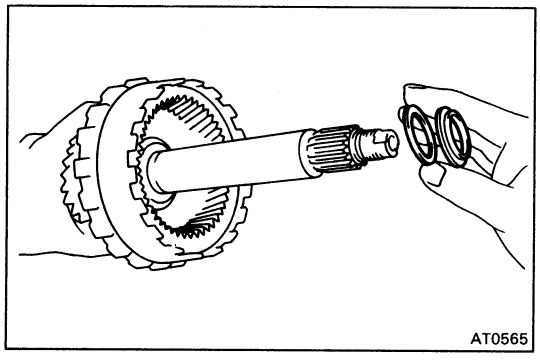
AT0565

8. INSTALL RACE AND BEARING

Coat the race and bearing with petroleum jelly and install them to the counter shaft.

Bearing and race

mm (in.)

	Outer Diameter	Inner Diameter
Race	41.8 (1.646)	30.0 (1.181)
Bearing	43.85 (1.726)	31.0 (1.220)

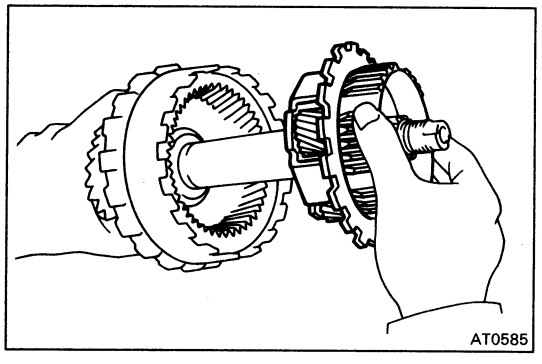
AT0585

9. INSTALL UNDERDRIVE PLANETARY GEAR

(a) Install the underdrive planetary gear to the counter shaft.

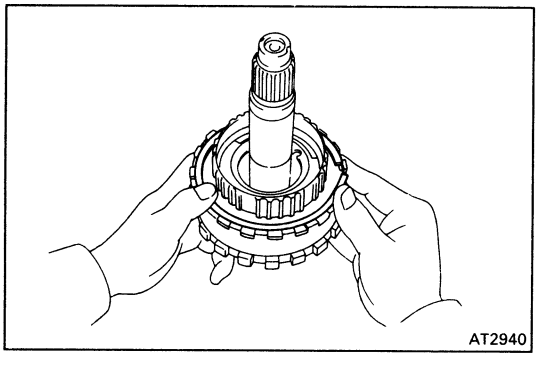
AT2940

(b) Install the snap ring.

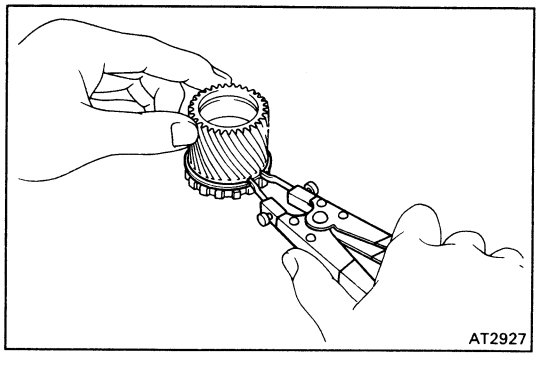
AT2927

10. INSTALL UNDERDRIVE PLANETARY SUN GEAR

(a) Using snap ring pliers, install the snap ring to the sun gear.

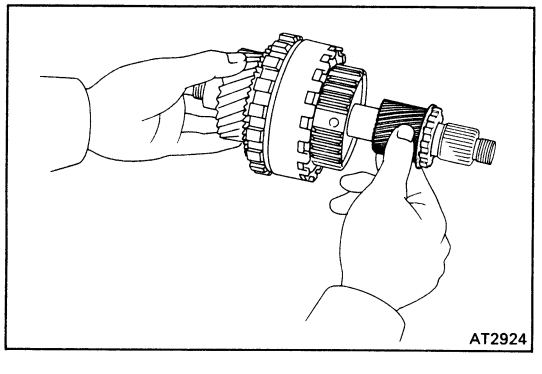
AT2924

(b) Install the underdrive planetary sun gear to the counter shaft as shown.

Underdrive Clutch and One-Way Clutch No. 3

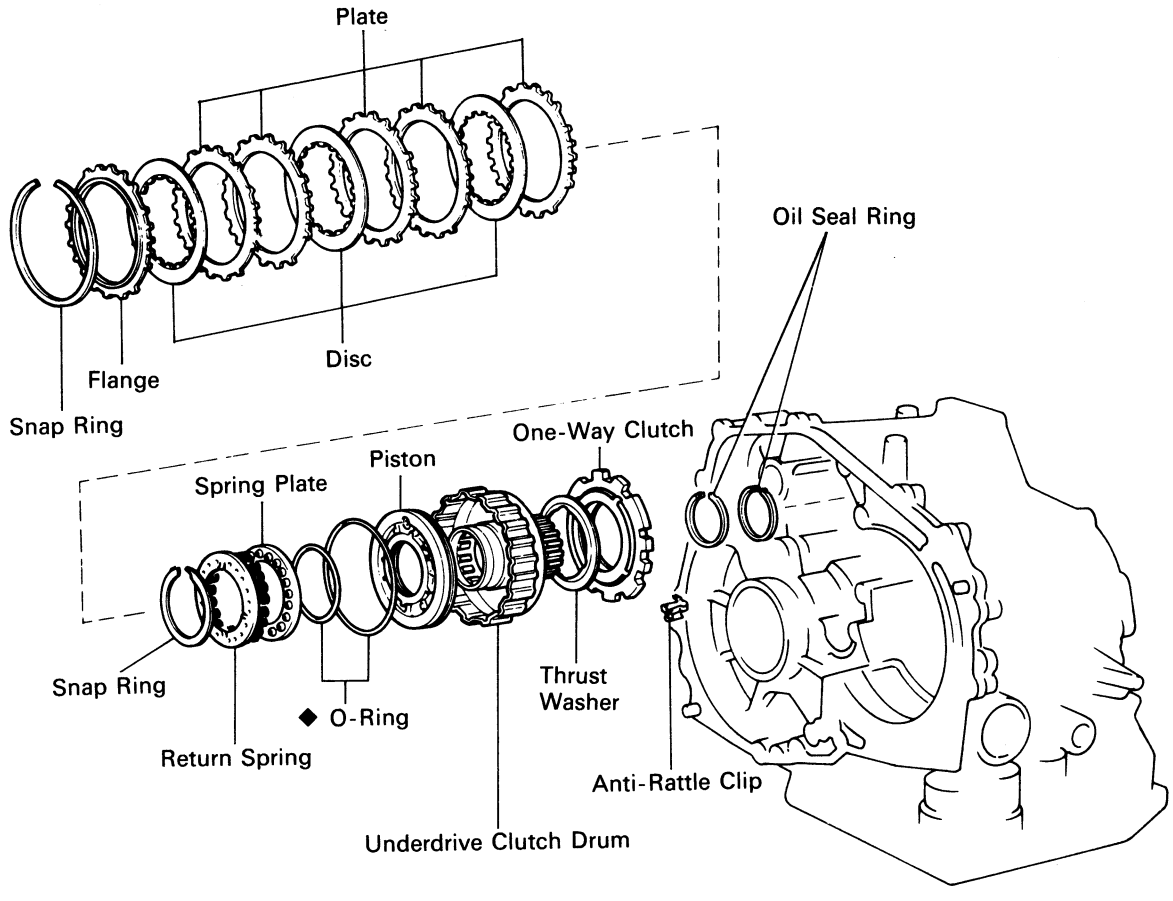

◆ Non-reusable part

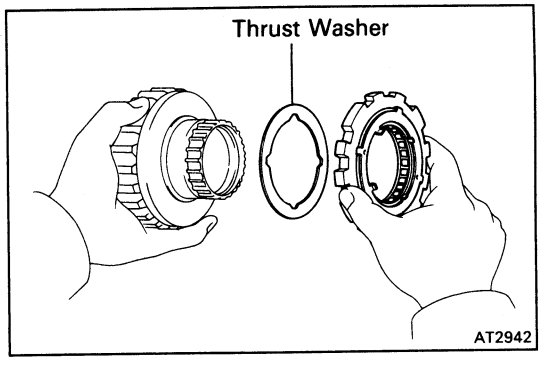

DISASSEMBLY OF UNDERDRIVE CLUTCH

1. REMOVE ONE-WAY CLUTCH FROM CLUTCH DRUM

Remove the one-way clutch and thrust washer from the underdrive clutch drum.

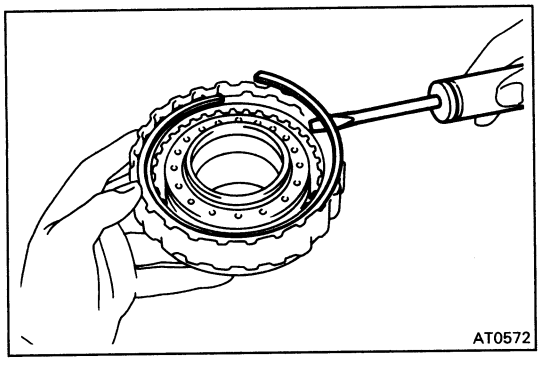

2. REMOVE SNAP RING

Using a screwdriver, remove the snap ring.

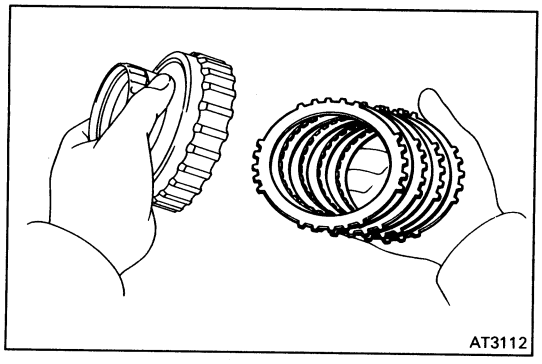

3. REMOVE FLANGE, DISCS AND PLATES

Remove the flange, discs and plates from the clutch drum.

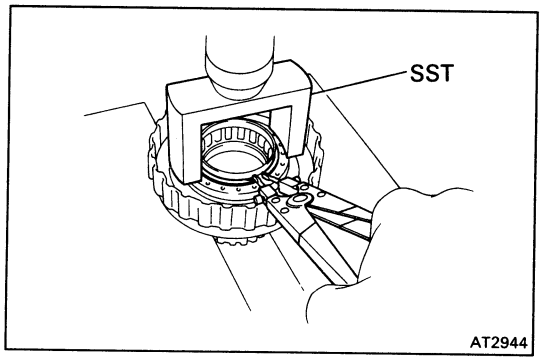

4. REMOVE RETURN SPRING AND SPRING PLATE

(a) Using SST and press, compress the return spring retainer.

SST 09350-32014 (09351-32070)

(b) Using snap ring pliers, remove the snap ring.

(c) Remove SST.

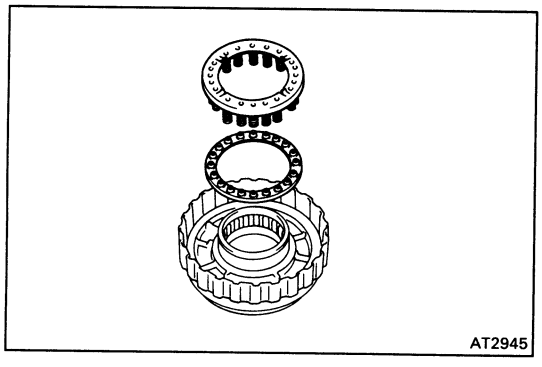

(d) Remove the return spring and spring plate.

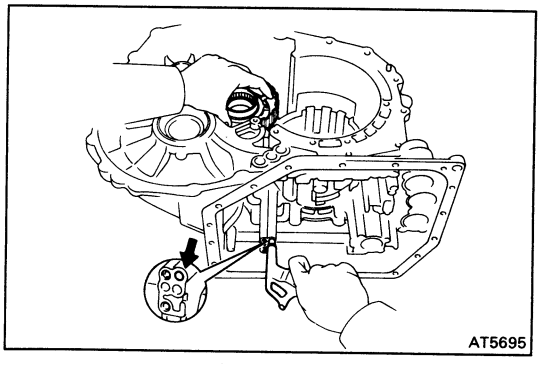

5. REMOVE UNDERDRIVE CLUTCH PISTON

(a) Install the underdrive clutch to the transaxle case.

HINT: Before installing the clutch, install the oil seal rings to the transaxle case.

(b) Apply compressed air into the oil passage of the case, and remove the piston from the clutch drum.

(c) If the piston does not pop out with compressed air, use needle-nose pliers to remove it.

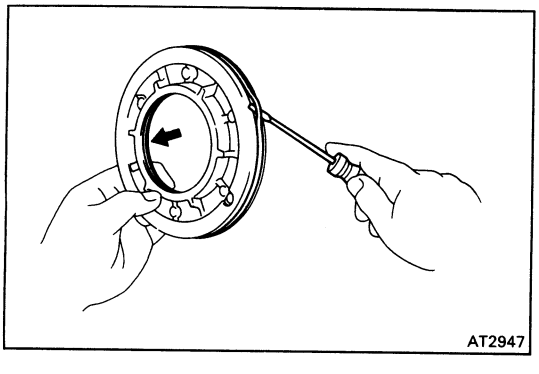

6. REMOVE O-RINGS FROM PISTON

Using a screwdriver, remove the two O-rings from the underdrive clutch piston.

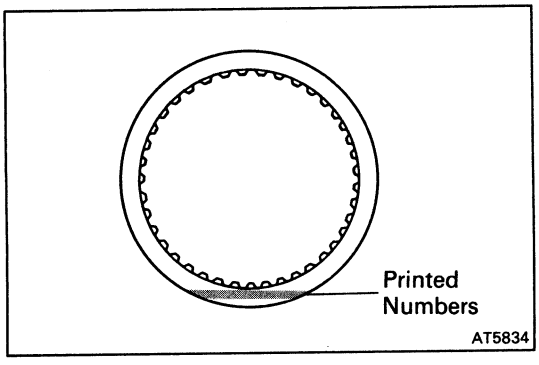

INSPECTION OF UNDERDRIVE CLUTCH COMPONENTS

1. INSPECT DISCS, PLATES AND FLANGES

Check if the sliding surface of the discs, plates and flanges are worn or burnt. If necessary, replace them.

HINT:

- If the lining of the disc is exfoliated or discolored, or even a part of the printed numbers are defaced, replace the disc.
- Before assembling new discs, soak them in ATF for at least two hours.

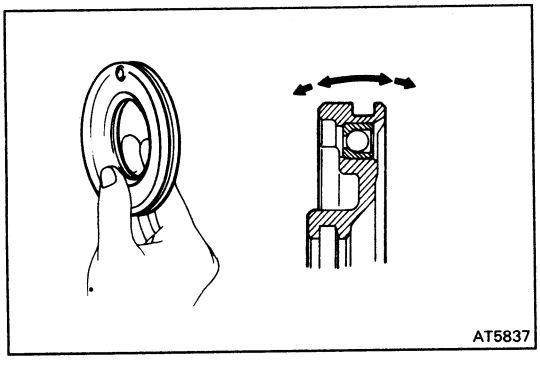

2. INSPECT UNDERDRIVE CLUTCH PISTON

(a) Check that the check ball is free by shaking the piston.

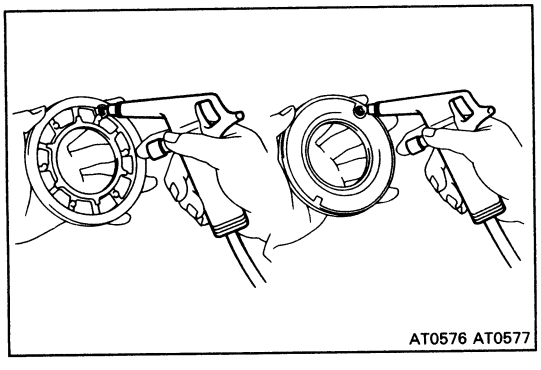

(b) Check that the valve does not leak by applying low-pressure compressed air.

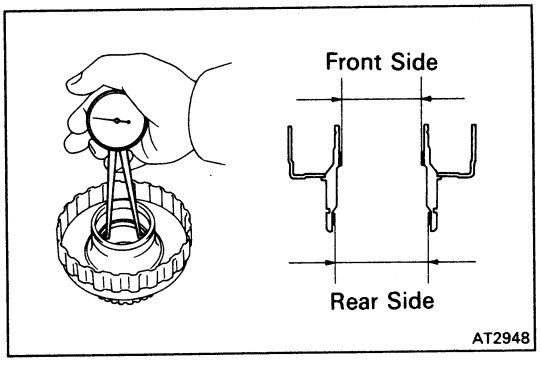

3. INSPECT UNDERDRIVE CLUTCH DRUM

Using a caliper gauge, measure the bushing inside diameter of the underdrive clutch drum as shown.

Standard inside diameter:

Front side	**46.500 – 46.525 mm (1.83071 – 1.83169 in.)**
Rear side	**55.000 – 55.030 mm (2.16535 – 2.16653 in.)**

Maximum inside diameter:

Front side	**46.570 mm (1.83346 in.)**
Rear side	**55.080 mm (2.16850 in.)**

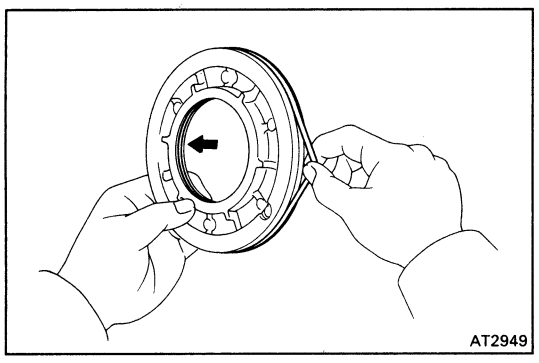
AT2949

ASSEMBLY OF UNDERDRIVE CLUTCH

1. INSTALL UNDERDRIVE CLUTCH PISTON INTO CLUTCH DRUM

(a) Install the two new O-rings to the piston.

HINT: Before installing, coat the O-rings with ATF.

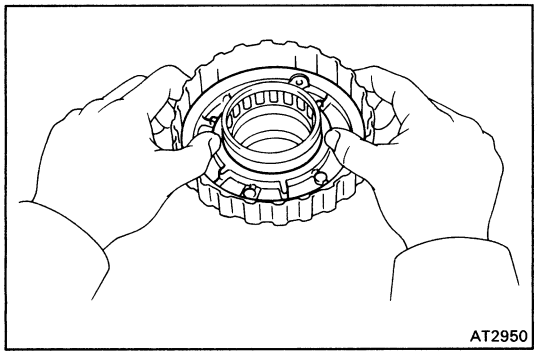
AT2950

(b) Install the underdrive clutch piston into the clutch drum.

HINT: Be careful not to damage the O-rings.

2. INSTALL SPRING SEAT AND RETURN SPRING

(a) Install the spring seat and return spring to the underdrive clutch as shown.

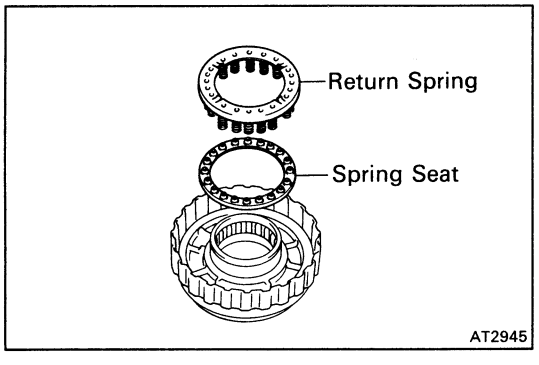

AT2945

(b) Using SST and press, compress the return spring retainer.

SST 09350-32014 (09351-32070)

(c) Using snap ring pliers, install the snap ring.

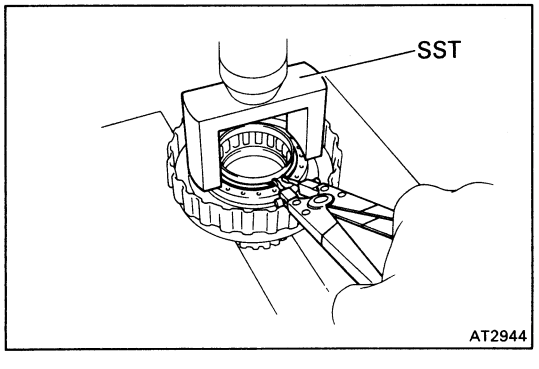

AT2944

HINT: Install the snap ring as shown.

(d) Remove SST.

SST 09350-32014 (09351-32070)

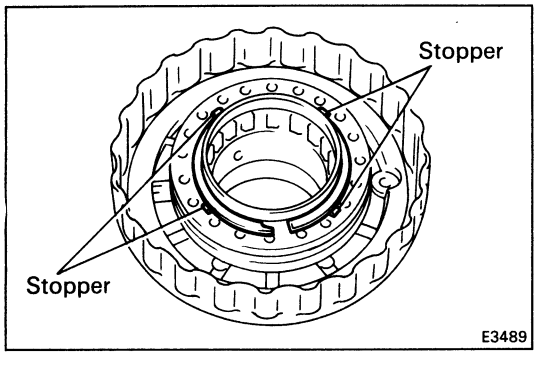

E3489

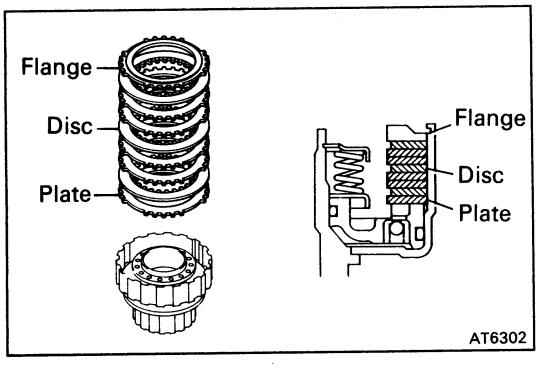

3. INSTALL PLATES, DISCS AND FLANGE

Install in order: D = Disc P = Plate F = Flange
F – D – P – P – D – P – P – D – P

HINT: Install the flange the flat end facing downward.

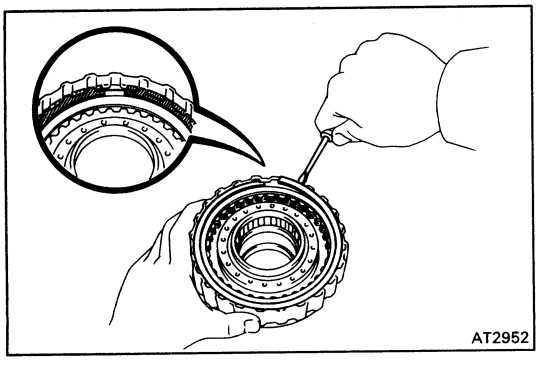

4. INSTALL SNAP RING

Install the snap ring to the underdrive clutch.

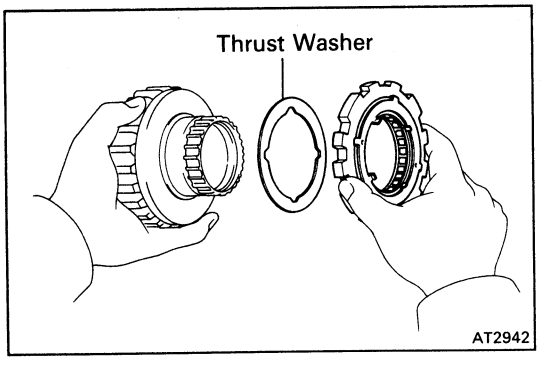

5. INSTALL ONE-WAY CLUTCH TO CLUTCH DRUM

(a) Install the thrust washer to clutch drum.

(b) Install the one-way clutch with the claw of retainer up.

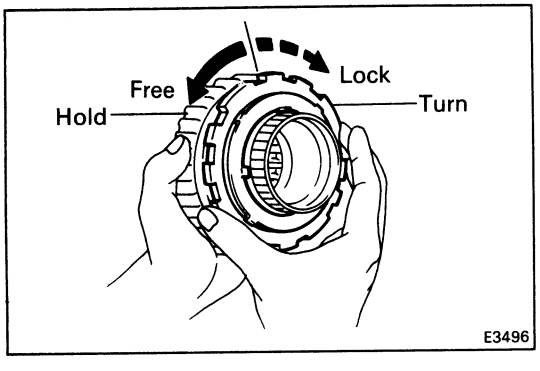

6. CHECK OPERATION OF ONE-WAY CLUTCH

Hold the one-way clutch drum and turn the one-way clutch.

Check that the one-way clutch turns freely counterclockwise and lock clockwise.

Underdrive Brake and B_4 Accumulator Piston

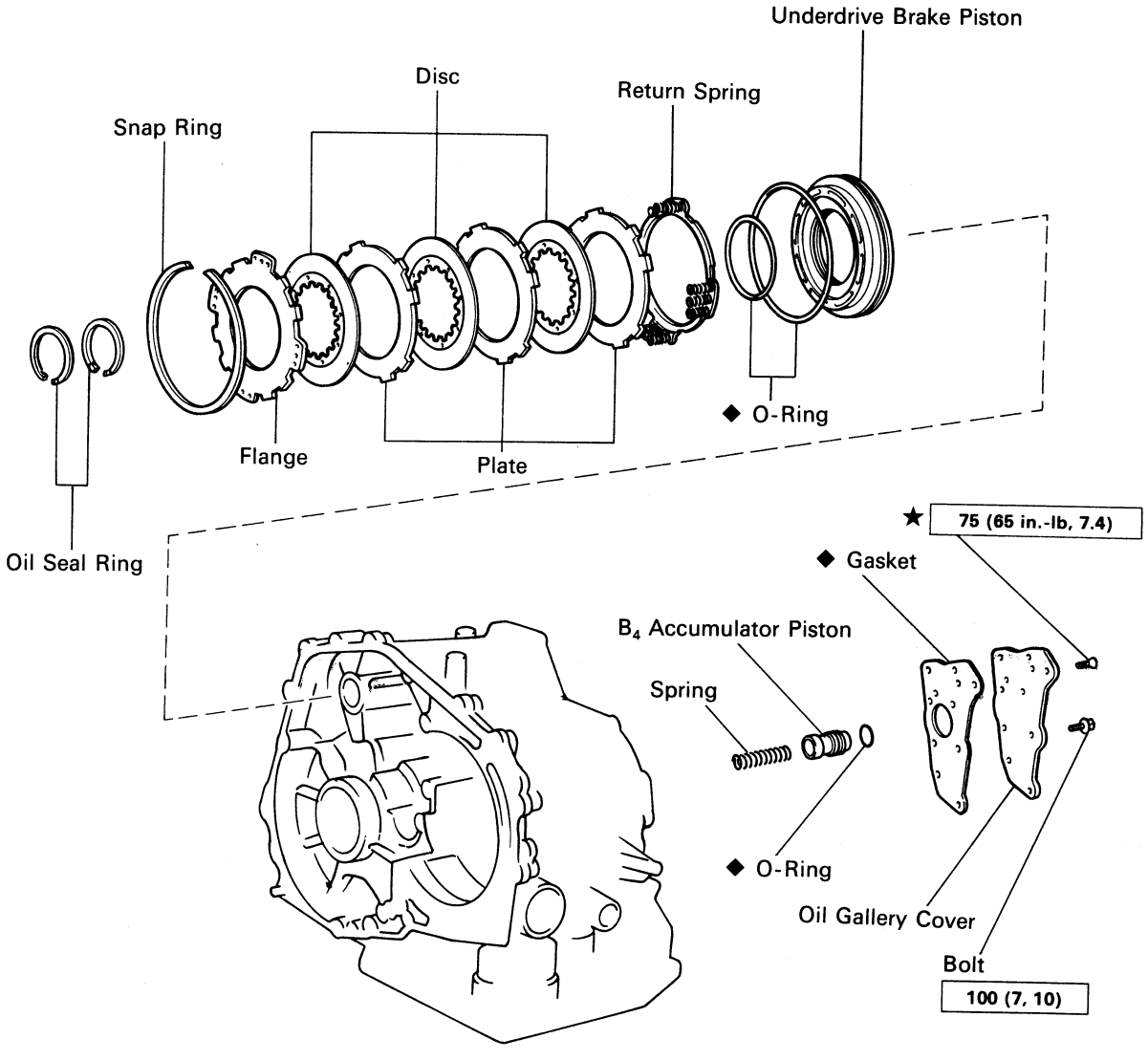

kg-cm (ft-lb, N·m) : Specified torque
◆ Non-reusable part
★ Precoated part

AT2953

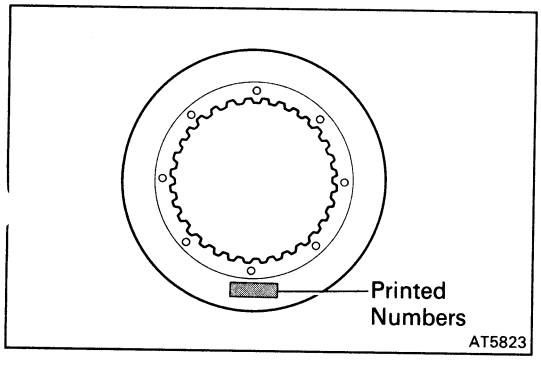

AT5823

INSPECTION OF UNDERDRIVE BRAKE COMPONENTS

INSPECT DISCS, PLATES AND FLANGES

Check if the sliding surface of the discs, plates and flanges are worn or burnt. If necessary, replace them.

HINT:

- If the lining of the disc is exfoliated or discolored, or even a part of the printed numbers are defaced, replace the disc.
- Before assembling new discs, soak them in ATF for at least two hours.

Valve Body

COMPONENTS

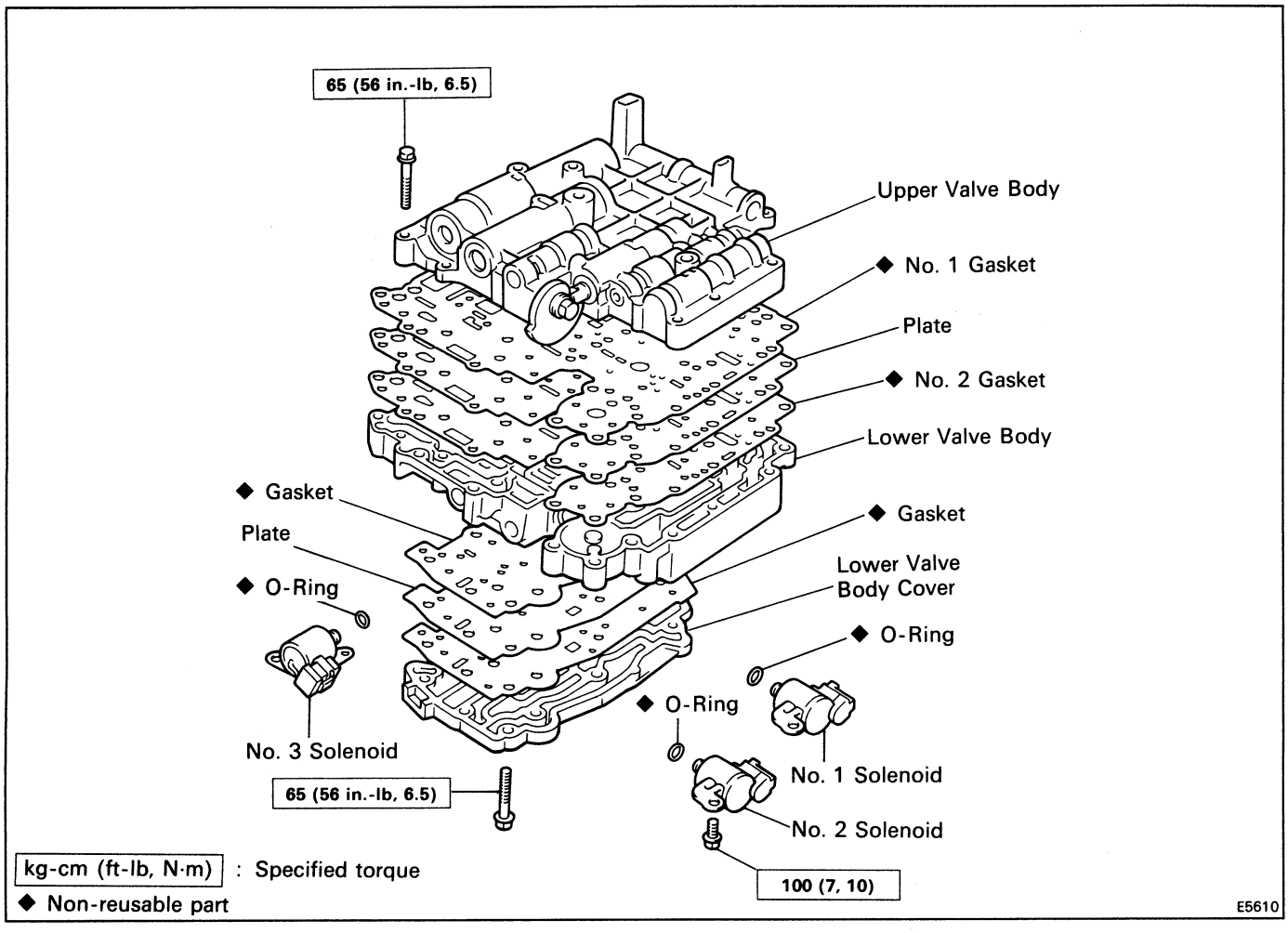

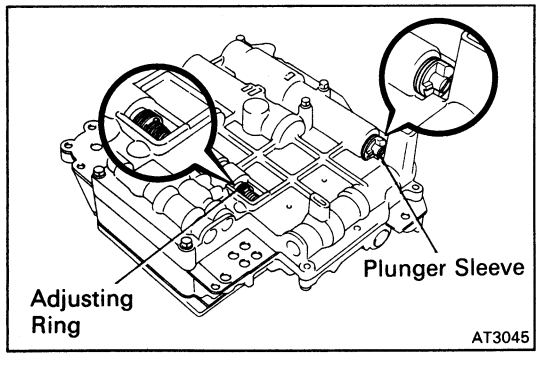

(Disassembly of Valve Body)

1. **NOTE THE NUMBERS OF ADJUSTING RINGS**

   HINT: Count the number of adjusting rings before disassembly of the valve body because the throttle pressure is changed according to the number. (Some of the valve bodies do not have any adjusting rings.)

2. **NOTE THE POSITION OF PLUNGER SLEEVE**

   Note which step at the end of the plunger sleeve is in contact with the valve body.

   HINT: Be certain to check this before disassembly because the line pressure changes according to the part of the plunger sleeve which comes into contact with the valve body.

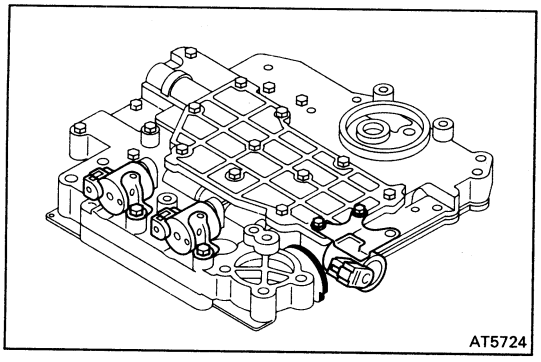

3. REMOVE SOLENOID

(a) Remove the solenoids.

(b) Remove the O-rings from the each solenoids.

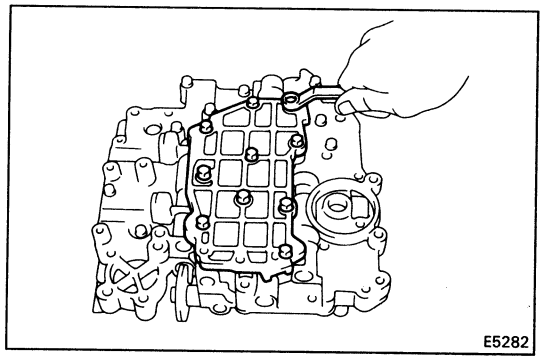

4. REMOVE LOWER VALVE BODY COVER

Remove the ten bolts and the lower valve body cover.

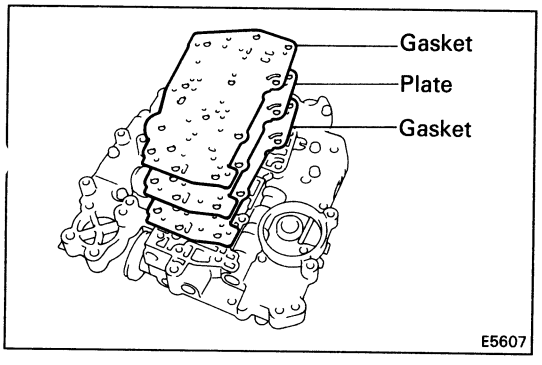

5. REMOVE GASKETS, PLATE AND STRAINER

Remove the two gaskets and plate.

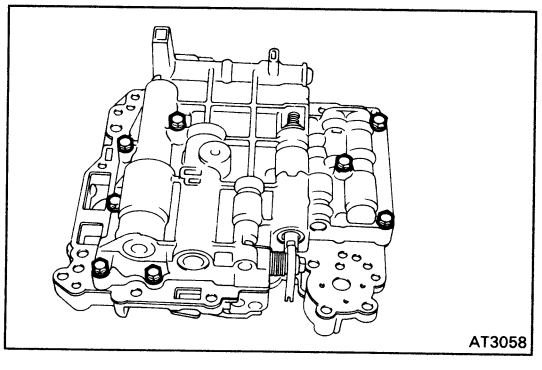

6. REMOVE BOLTS FROM UPPER VALVE BODY

Remove the eight bolts from the upper valve body.

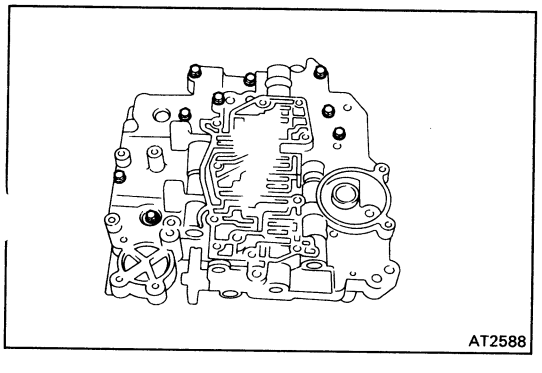

7. REMOVE BOLTS FROM LOWER VALVE BODY

Remove the nine bolts from the lower valve body.

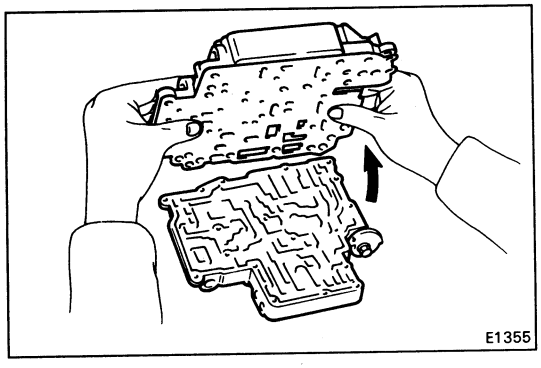

8. **LIFT OFF LOWER VALVE BODY AND PLATE AS SINGLE UNIT**

Hold the plate to the lower valve body and lift off the lower valve body.

HINT: Be careful that the valves, springs and strainer do not fall out.

9. **REMOVE PLATE AND GASKETS FROM LOWER VALVE BODY**

(Upper Valve Body)

COMPONENTS

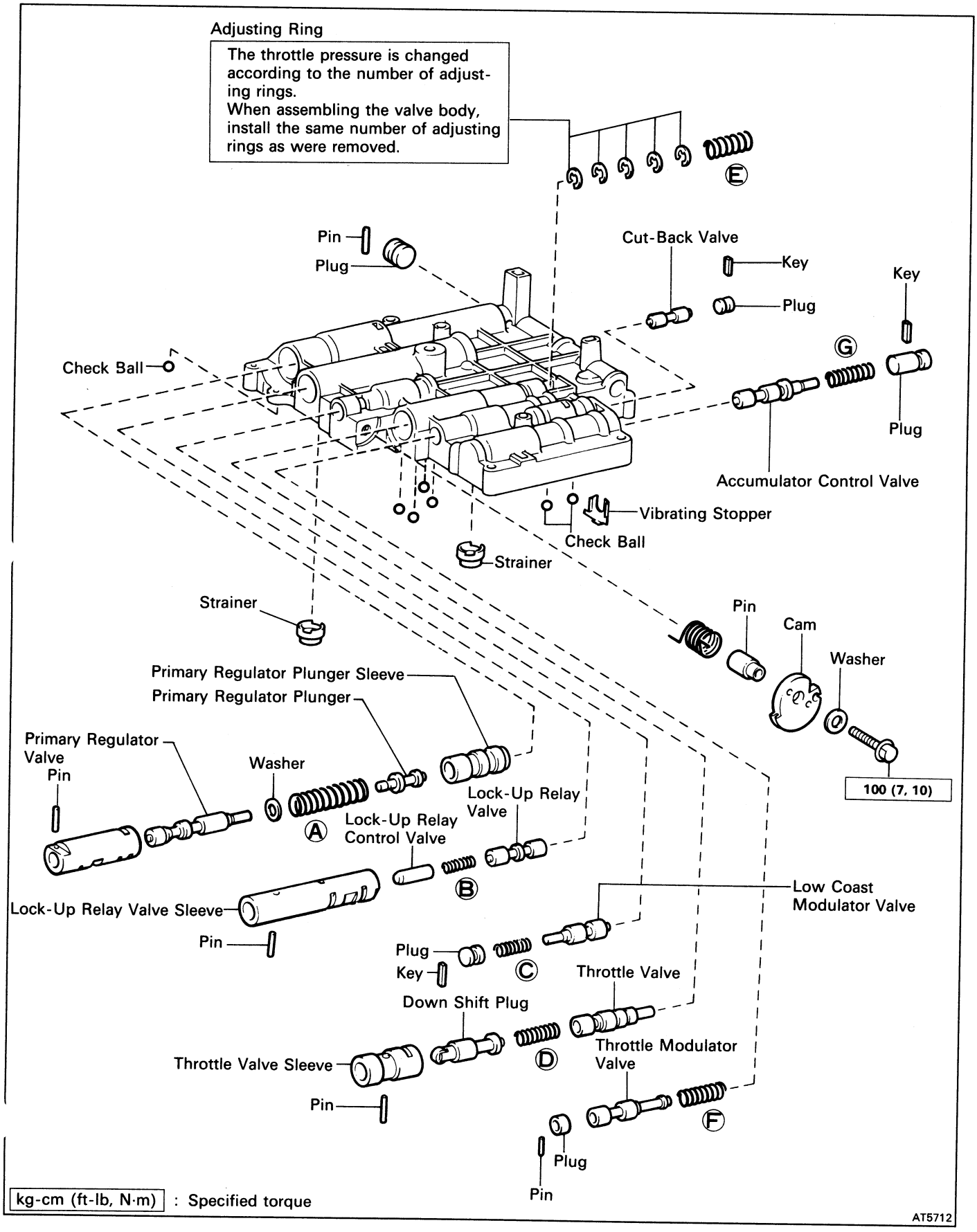

SPECIFICATIONS OF VALVE BODY SPRING

Spring		Free Length mm (in.)	Coil Outer Diameter mm (in.)	Number of Coils	Color
Ⓐ	Primary Regulator Valve Spring	66.7 (2.626)	18.6 (0.732)	12.5	Purple
Ⓑ	Lock-up Relay Valve Spring	18.8 (0.740)	5.1 (0.201)	14.5	None
Ⓒ	Low Coast Modulator Valve Spring	27.5 (1.083)	8.3 (0.327)	12.5	Yellow
Ⓓ	Down Shift Plug Spring	30.0 (1.181)	8.7 (0.343)	12.5	Red
Ⓔ	Throttle Valve Spring	29.2 (1.150)	9.2 (0.362)	9.5	Light Green
Ⓕ	Throttle Modulator Valve Spring	29.9 (1.177)	9.0 (0.354)	15.5	Green
Ⓖ	Accumulator Control Valve Spring	33.2 (1.307)	10.0 (0.394)	11.5	Orange

HINT: During re-assembly please refer to the spring specifications above to help discriminate between the different springs.

SECTIONAL VIEW OF VALVE BODY

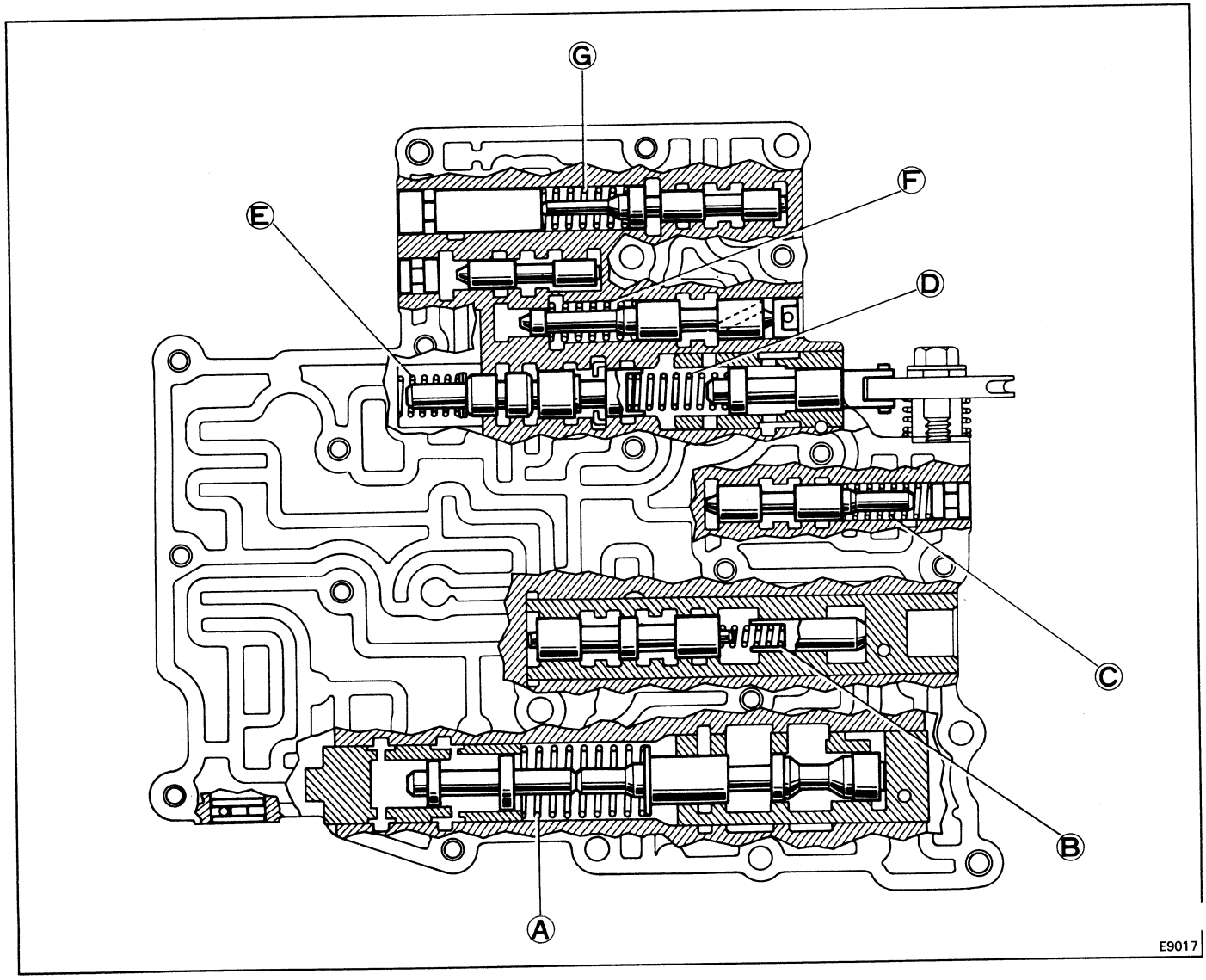

LOCATION OF KEYS, PINS, VIBRATING STOPPER AND CHECK BALLS

1. KEY, STOPPER AND PIN

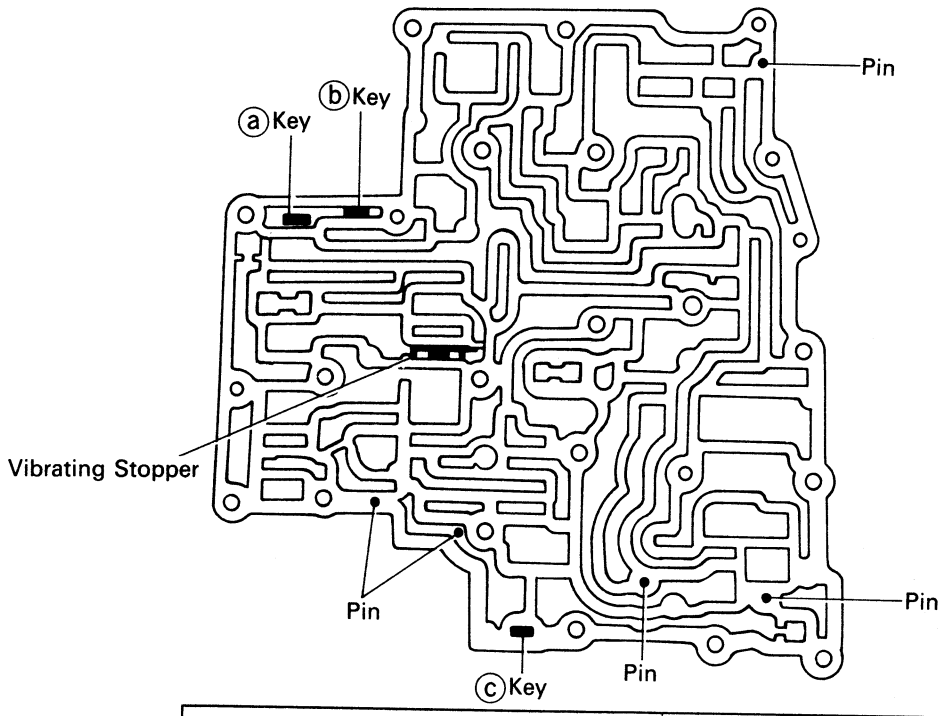

mm (in.)

Key		Height	Width	Thickness
ⓐ	Accumulator Control Valve	15.0 (0.591)	5.0 (0.197)	3.2 (0.126)
ⓑ	Cut-back Valve	16.0 (0.630)	5.0 (0.197)	3.2 (0.126)
ⓒ	Low Coast Modulator Valve	21.2 (0.835)	5.0 (0.197)	3.2 (0.126)

AT5689

2. CHECK BALL

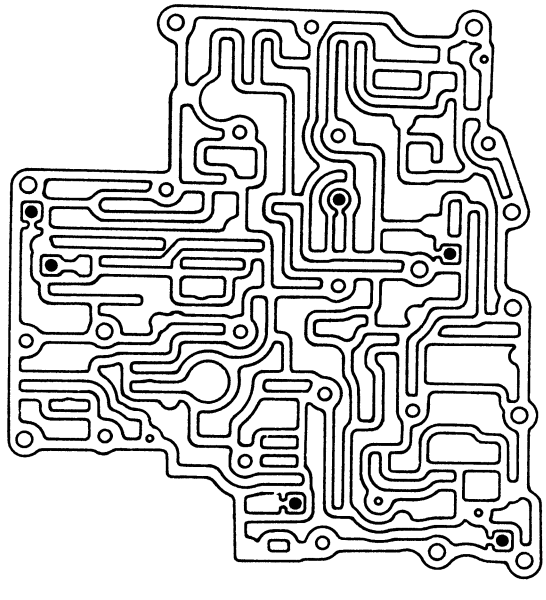

AT5678

(Lower Valve Body)

COMPONENTS

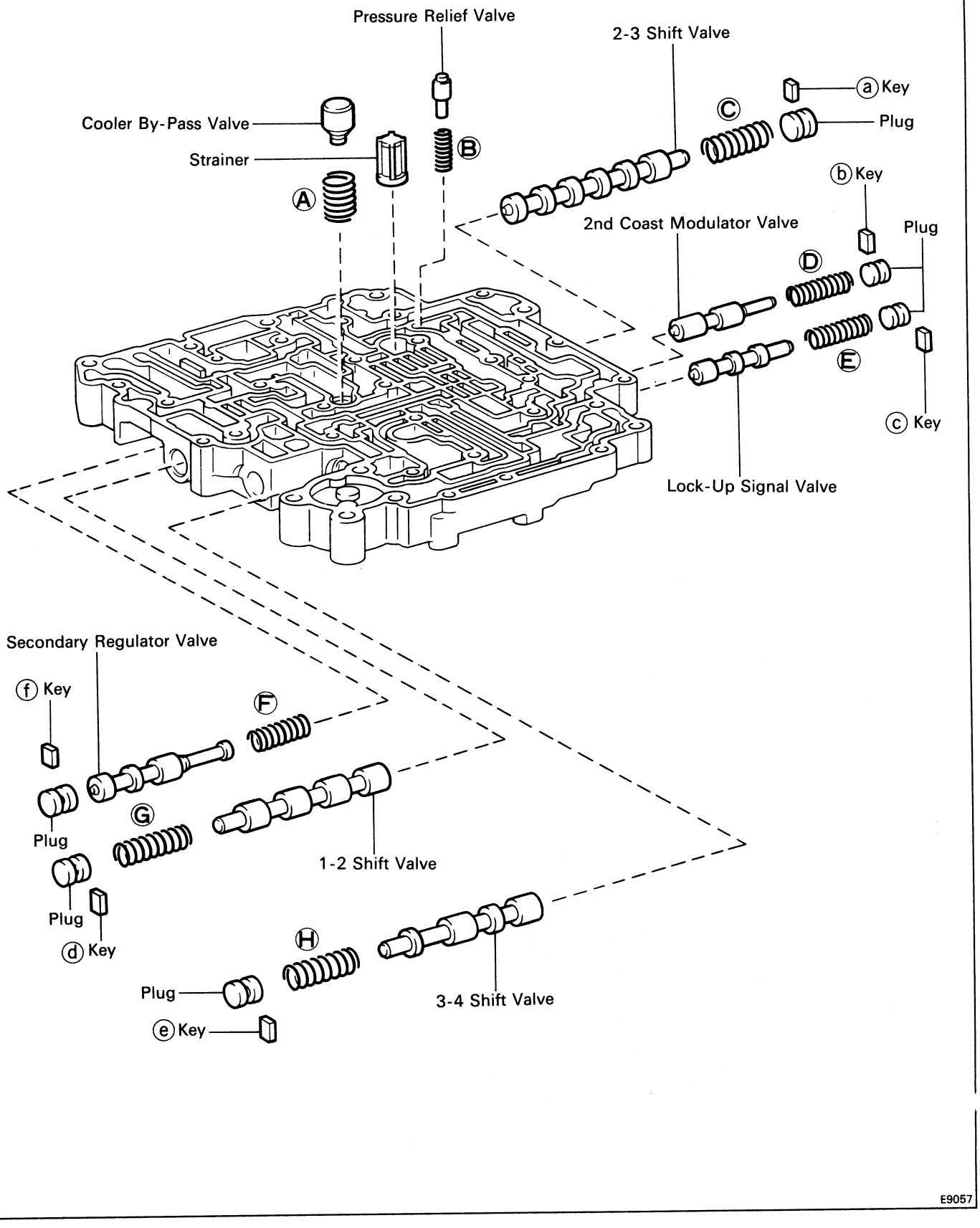

SPECIFICATIONS OF VALVE BODY SPRINGS

Spring		Free Length mm (in.)	Coil Outer Diameter mm (in.)	Number of Coils	Color
Ⓐ	Cooler By-pass Valve Spring	18.3 (0.720)	12.0 (0.472)	6.5	Yellow
Ⓑ	Pressure Relief Valve Spring	11.2 (0.441)	6.4 (0.252)	7.5	None
Ⓒ	2-3 Shift Valve Spring	30.7 (1.209)	9.7 (0.382)	10.5	Purple
Ⓓ	2nd Coast Modulator Valve Spring	29.6 (1.165)	8.3 (0.327)	12.5	Red
Ⓔ	Lock-up Signal Valve Spring	30.0 (1.181)	8.2 (0.323)	11.5	Orange
Ⓕ	Secondary Regulator Valve Spring	27.4 (1.079)	11.0 (0.433)	11.5	Blue
Ⓖ	1-2 Shift Valve Spring	30.8 (1.213)	9.7 (0.382)	10.5	Purple
Ⓗ	3-4 Shift Valve Spring	30.8 (1.213)	9.7 (0.382)	10.5	Purple

HINT: During re-assembly please refer to the spring specifications above to help discriminate between the different springs.

SECTIONAL VIEW OF VALVE BODY

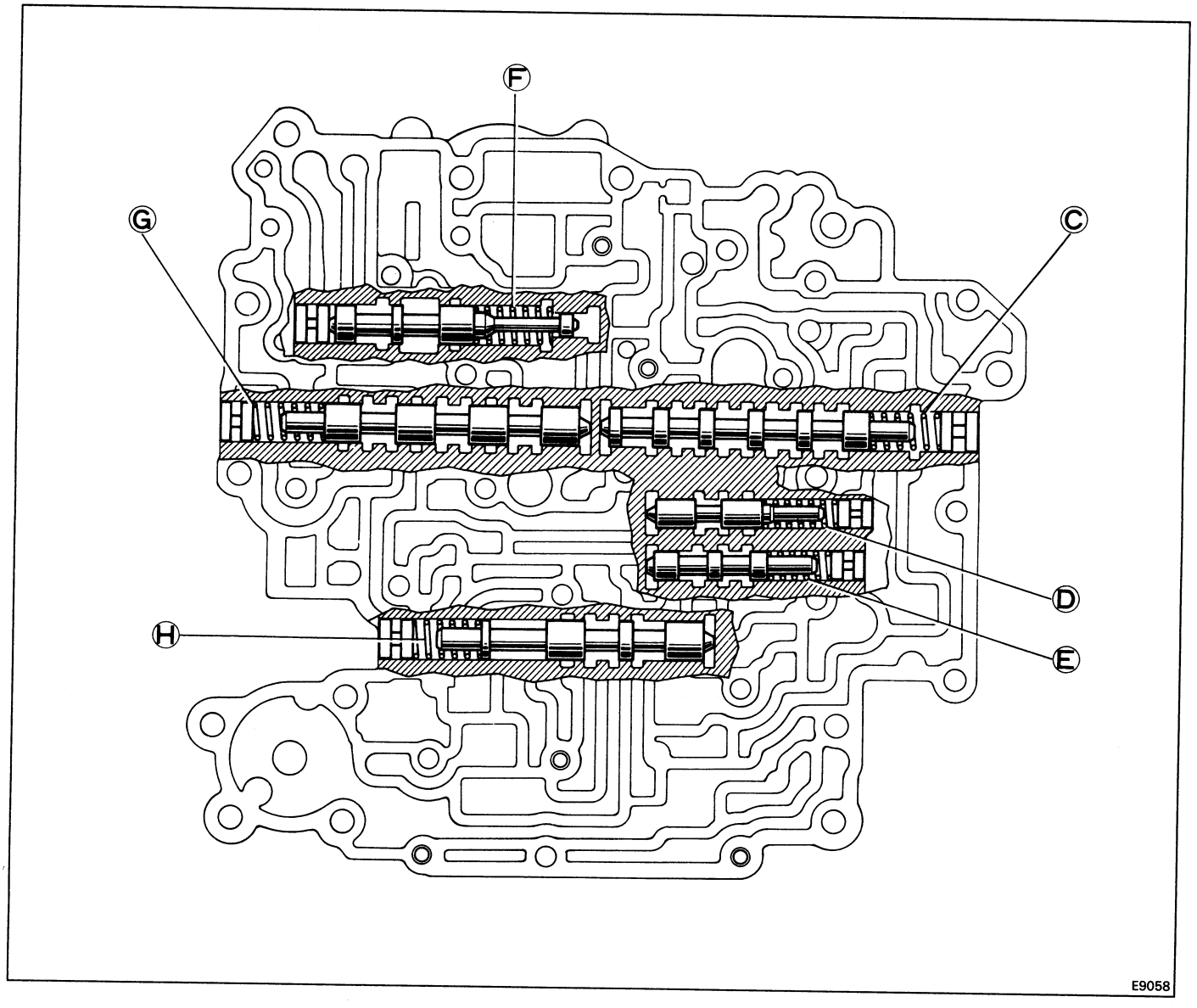

LOCATION OF KEYS AND STRAINER

(Upper Side)

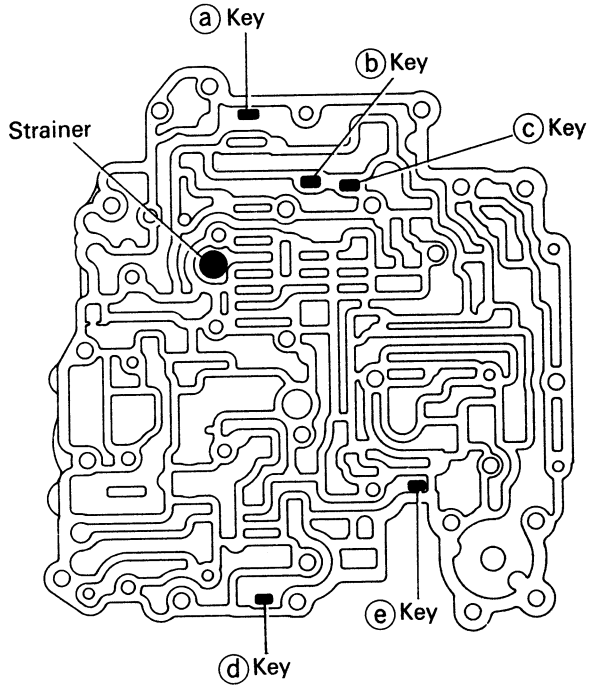

(Lower Side)

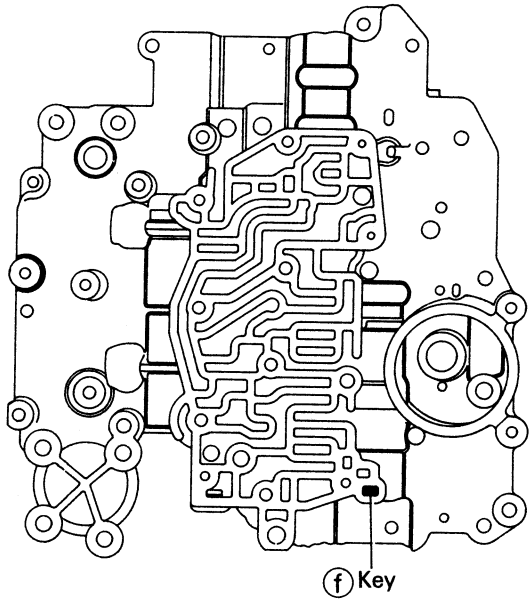

mm (in.)

Key		Height	Width	Thickness
ⓐ	2-3 Switch Valve	11.5 (0.453)	5.0 (0.197)	3.2 (0.126)
ⓑ	2nd Coast Modulator Valve	11.5 (0.453)	5.0 (0.197)	3.2 (0.126)
ⓒ	Lock-up Signal Valve	11.5 (0.453)	5.0 (0.197)	3.2 (0.126)
ⓓ	1-2 Shift Valve	11.5 (0.453)	5.0 (0.197)	3.2 (0.126)
ⓔ	3-4 Shift Valve	11.5 (0.453)	5.0 (0.197)	3.2 (0.126)
ⓕ	Secondary Regulator Valve	9.2 (0.362)	5.0 (0.197)	3.2 (0.126)

AT5726 AT5727

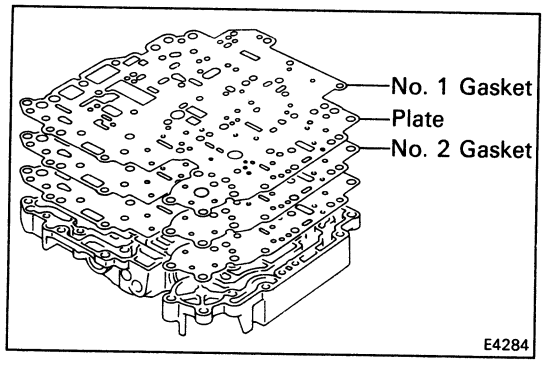

(Assembly of Valve Body)

(See page AT-112)

1. **POSITION PLATE AND NEW GASKETS ON LOWER VALVE BODY**

Position the new No.2 gasket, the plate and then the new No.1 gasket on the lower valve body.

HINT: Since the No.1 gasket and No.2 gasket are similar use the illustration below to discriminate between them.

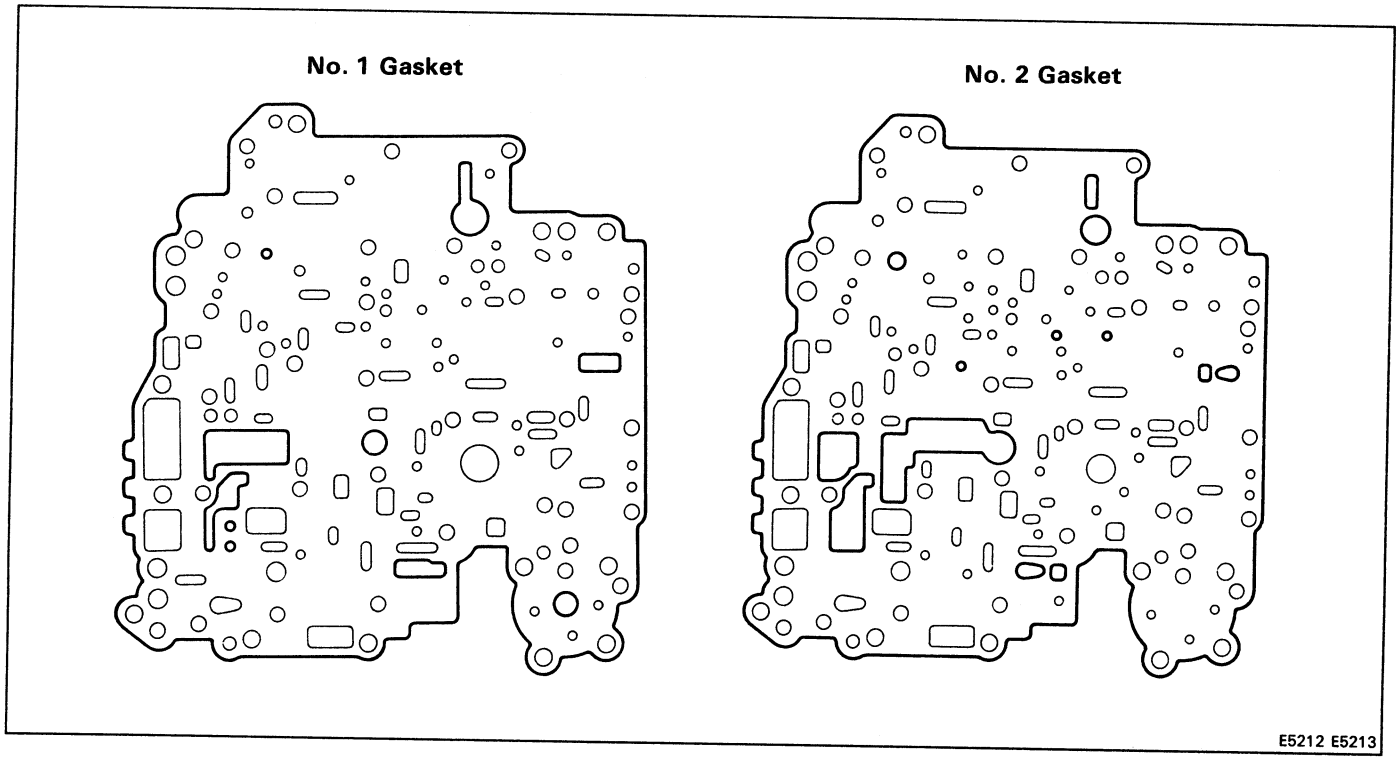

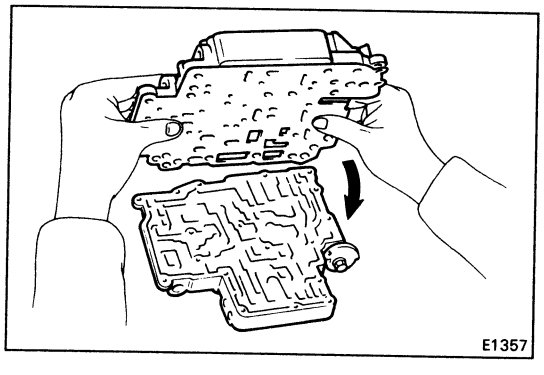

2. **PLACE LOWER VALVE BODY WITH PLATE AND GASKETS ON UPPER VALVE BODY**

HINT: Hold the lower valve body, gaskets and plate securely so they do not separate.

Align each bolt hole in the valve bodies with the gaskets and plate.

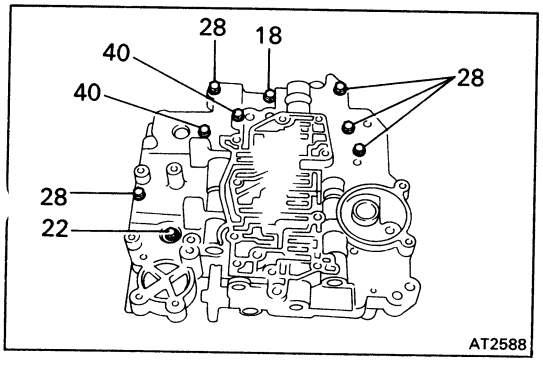

3. **INSTALL AND FINGER TIGHTEN BOLTS IN LOWER VALVE BODY TO SECURE UPPER VALVE BODY**

Install and finger tighten the nine bolts.

HINT: Each bolt length (mm) is indicated in the figure.

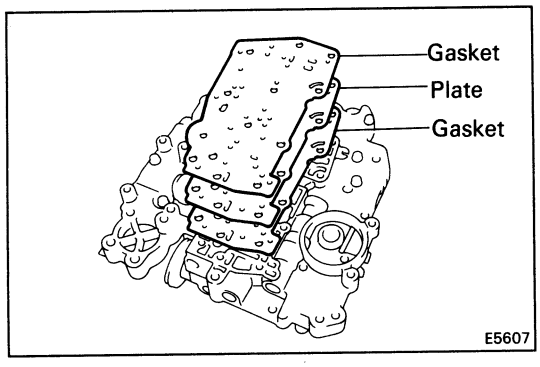

4. INSTALL LOWER VALVE BODY COVER

(a) Position a new gasket and plate and then another new gasket.

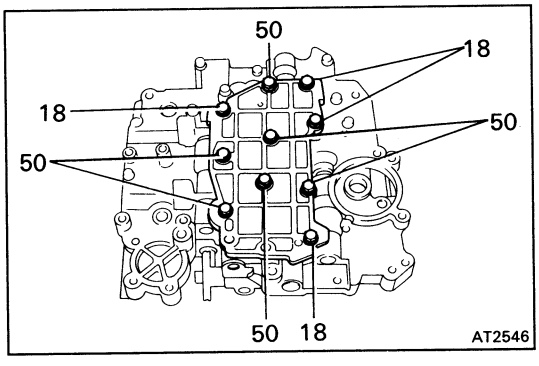

(b) Position the lower valve body cover.

(c) Install and finger tighten the ten bolts.

HINT: Each bolt length (mm) is indicated in the figure.

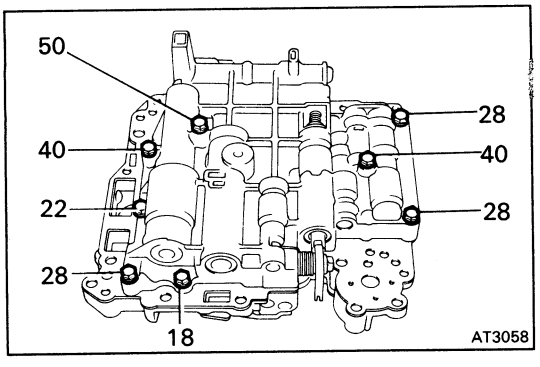

5. INSTALL AND FINGER TIGHTEN BOLTS IN UPPER VALVE BODY

Install and finger tighten the eight bolts.

HINT: Each bolt length (mm) is indicated in the figure.

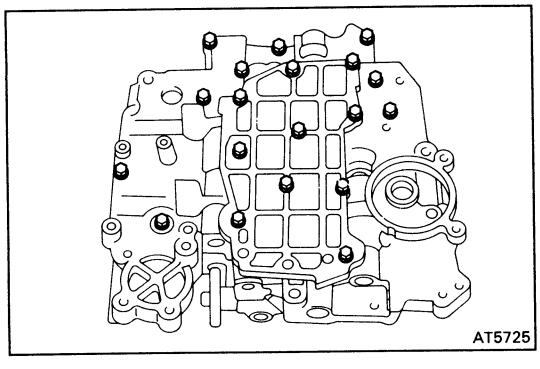

6. TIGHTEN BOLTS OF UPPER AND LOWER VALVE BODIES

(a) Tighten the nineteen bolts in the lower valve body.

Torque: 65 kg-cm (56 in.-lb, 6.4 N·m)

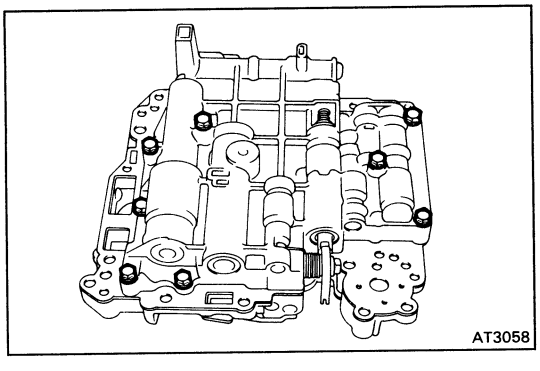

(b) Tighten the eight bolts in the upper valve body.

Torque: 65 kg-cm (56 in.-lb, 6.4 N·m)

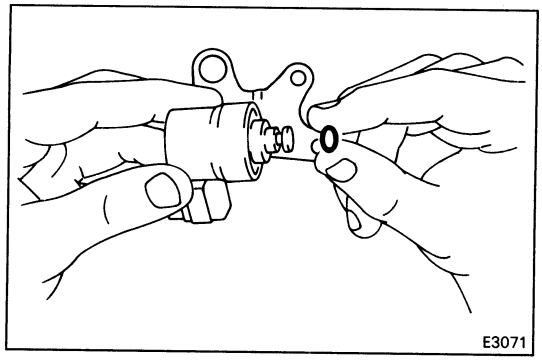

7. INSTALL SOLENOID

(a) Install the new O-rings on the each solenoids.

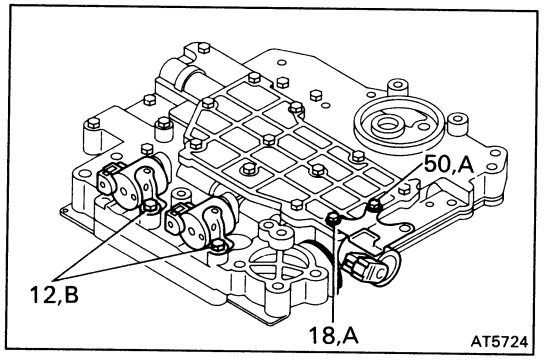

(b) Install the solenoids.

HINT: Each bolt length (mm) is indicated in the figure.

Torque: A 65 kg-cm (56 in.-lb, 6.4 N·m)
B 100 kg-cm (7 ft-lb, 10 N·m)

Differential

COMPONENTS

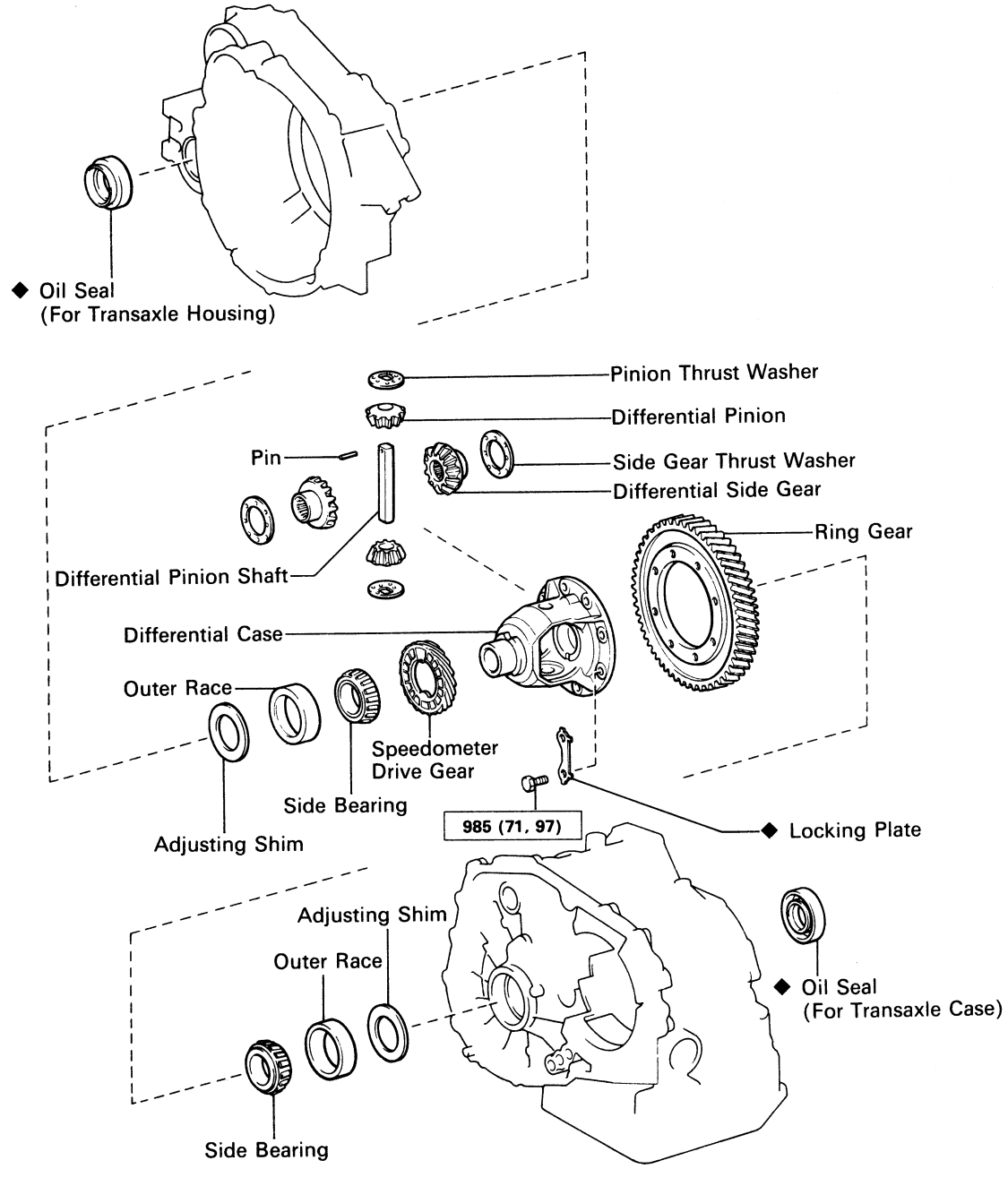

kg-cm (ft-lb, N·m) : Specified torque

◆ Non-reusable part

E9120

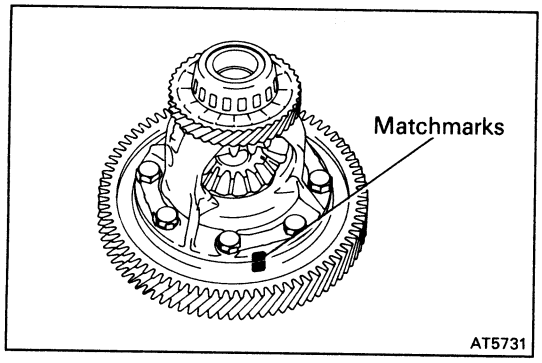

DISASSEMBLY OF DIFFERENTIAL

1. REMOVE RING GEAR

(a) Place the matchmarks on the ring gear and differential case.

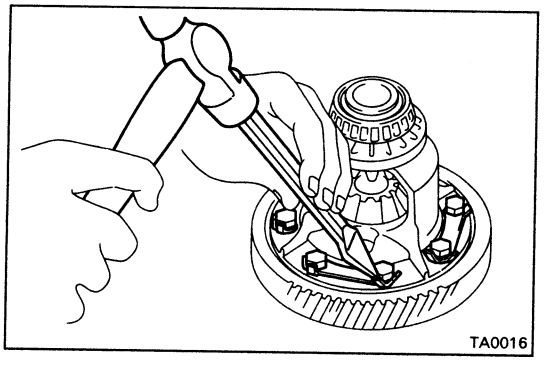

(b) Loosen the staked part of the locking plate.

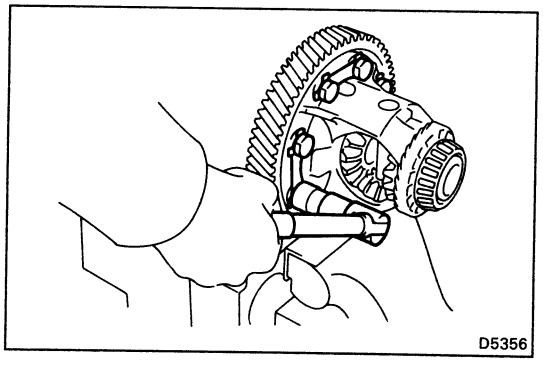

(c) Remove the eight bolts and four locking plates.

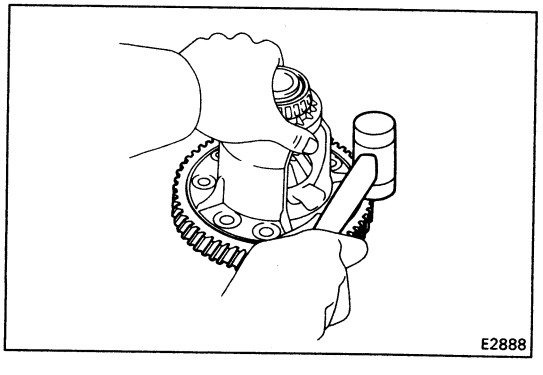

(d) Using a plastic hammer, tap on the ring gear to remove it from the case.

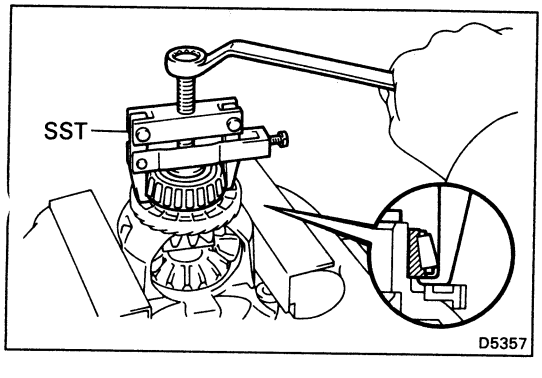

2. REMOVE SIDE BEARINGS FROM DIFFERENTIAL CASE

(a) Setting SST to the cut-out portion on the speedometer drive gear, remove the bearing from the differential case.

SST 09502-10012

(b) Remove the speedometer drive gear.

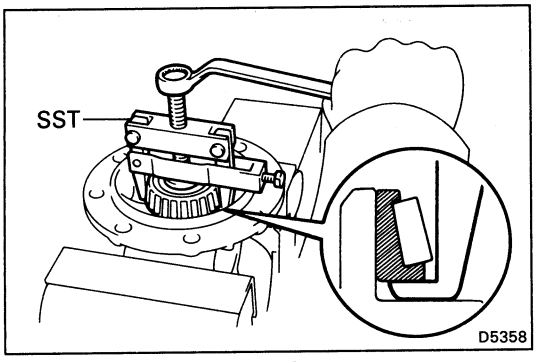

(c) Setting SST to the cut-out portion on the differential case, remove the bearing.

SST 09502-10012

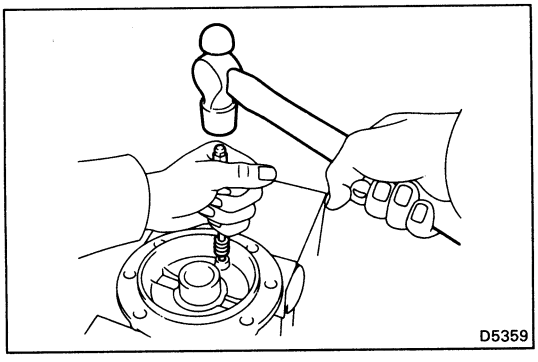

3. DISASSEMBLE DIFFERENTIAL CASE

(a) Drive out the pinion shaft lock pin from the ring gear side.

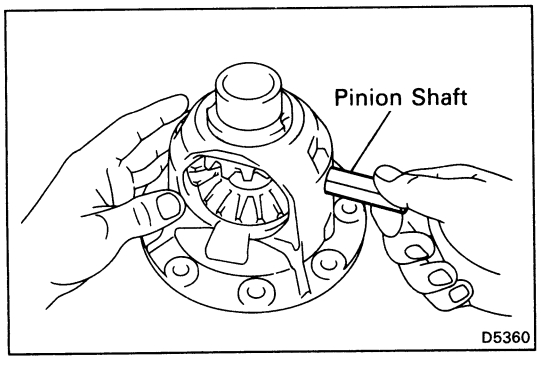

(b) Remove the pinion shaft from the case.

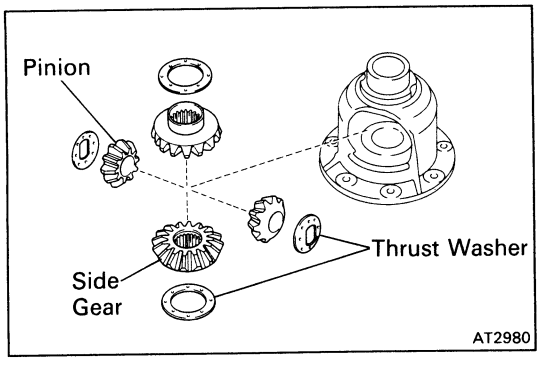

(c) Remove the two pinions, two side gears and four thrust washers.

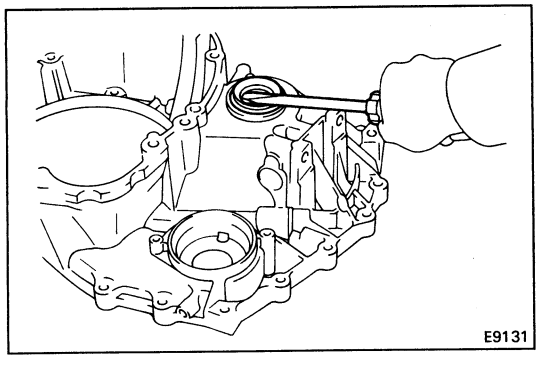

4. REMOVE OIL SEAL OF TRANSAXLE HOUSING

Using a screwdriver, remove the oil seal.

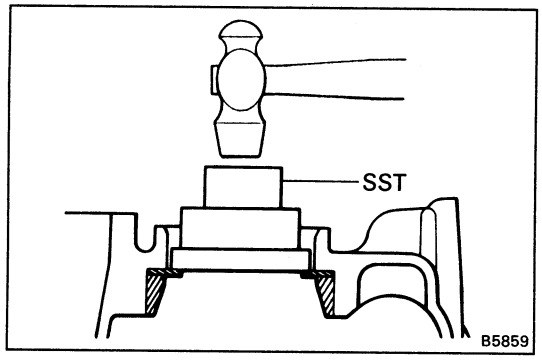

5. REMOVE SIDE BEARING OUTER RACE OF TRANSAXLE HOUSING

Using SST and a hammer, drive out the outer race and shim.

SST 09350-32014 (09351-32090)

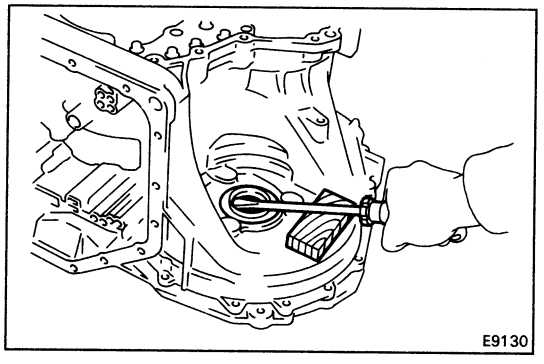

6. REMOVE OIL SEAL OF TRANSAXLE CASE

Using a screwdriver, remove the oil seal.

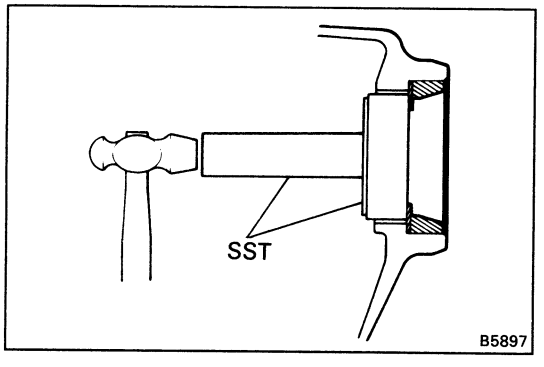

7. REMOVE SIDE BEARING OUTER RACE OF TRANSAXLE CASE

Using SST and a hammer, drive out the outer race and adjusting shim.

SST 09350-32014 (09351-32130, 09351-32150)

ASSEMBLY OF DIFFERENTIAL

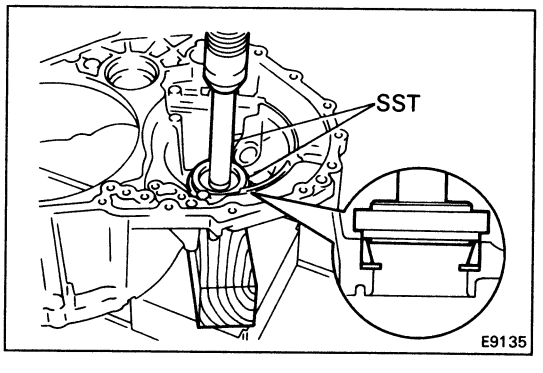

1. INSTALL SIDE BEARING OUTER RACE OF TRANSAXLE HOUSING

(a) Place the shim onto the transaxle housing.

(b) Using SST and press, press a new outer race into the transaxle housing.

SST 09350-32014 (09351-32111, 09351-32130)

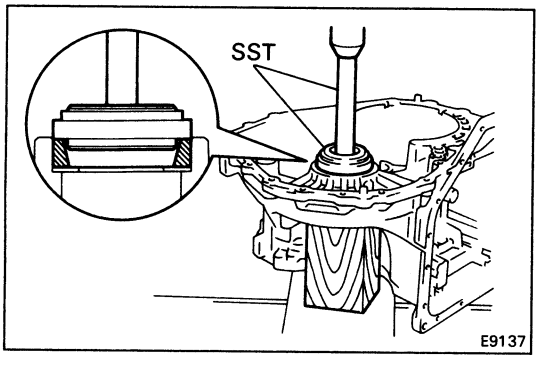

2. INSTALL SIDE BEARING OUTER RACE OF TRANSAXLE CASE

(a) Place the adjusting shim onto the transaxle case.

(b) Using SST and press, press a new outer race into the transaxle case.

SST 09350-32014 (09351-32111, 09351-32130)

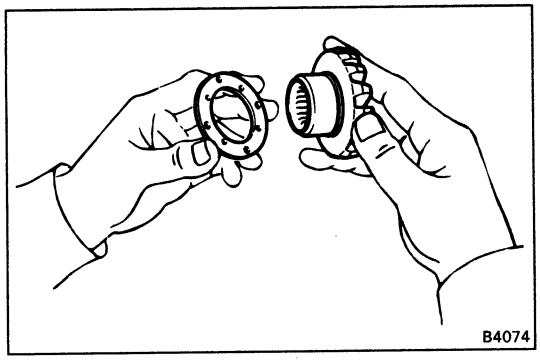

3. ASSEMBLE DIFFERENTIAL CASE

(a) Install the thrust washers to the side gears.

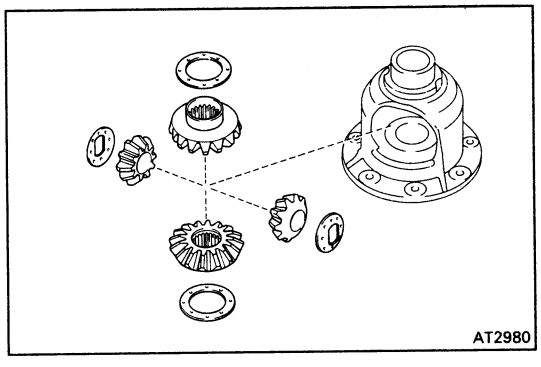

(b) Install the side gears with thrust washers, pinion gears and pinion thrust washers into the differential case.

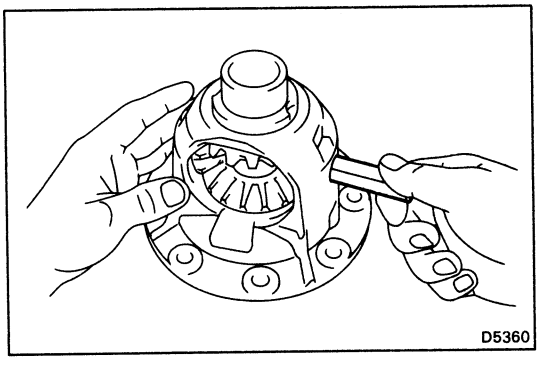

(c) Install the pinion shaft so as to align the lock pin holes on the pinion shaft and differential case.

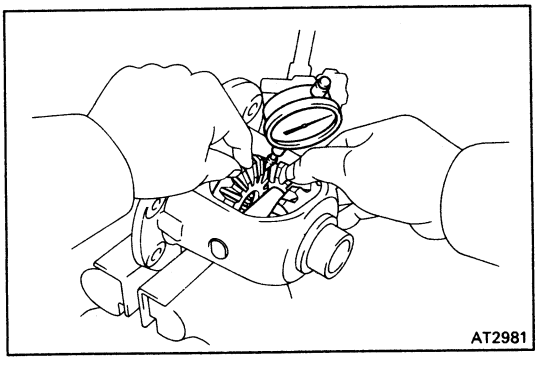

4. CHECK SIDE GEAR BACKLASH

(a) Measure the side gear backlash while holding one pinion gear toward the case.

Standard backlash: 0.05 – 0.20 mm (0.0020 – 0.0079 in.)

If the backlash is out of specification, install the correct thrust washer to the side gear.

(b) Referring to the table below, select thrust washers which will ensure that the backlash is within specification. Try to select washers of the same size of both sides.

Thrust washer thicknesses

Thickness mm (in.)	Thickness mm (in.)
0.95 (0.0374)	1.10 (0.0433)
1.00 (0.0394)	1.15 (0.0453)
1.05 (0.0413)	1.20 (0.0472)

If the backlash is not within specification, install a thrust washer of a different thickness.

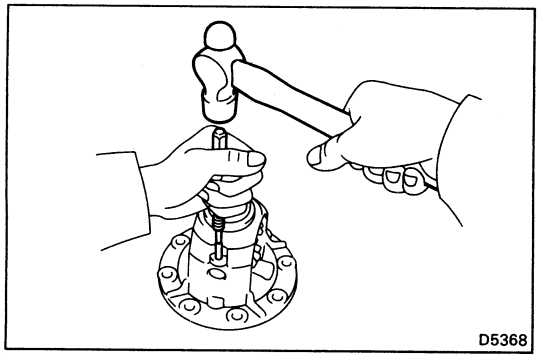

5. INSTALL LOCK PIN

(a) Using a hammer and punch, drive the lock pin through the case and hole in the pinion shaft.

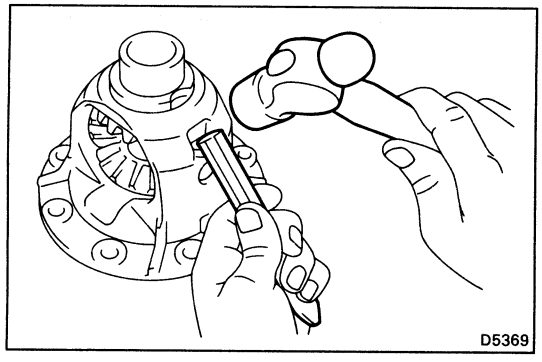

(b) Stake the differential case.

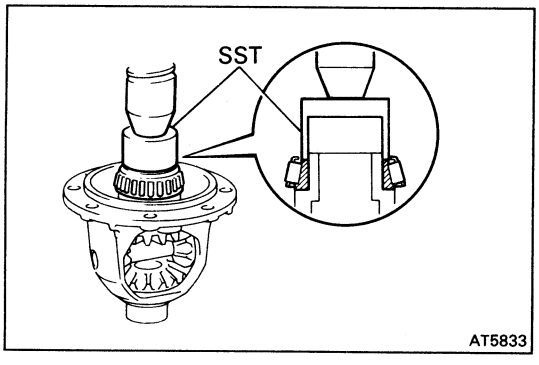

6. INSTALL SIDE BEARINGS TO DIFFERENTIAL CASE

(a) Using SST and press, press the side bearing into the differential case.

SST 09710-30030 (09710-03160)

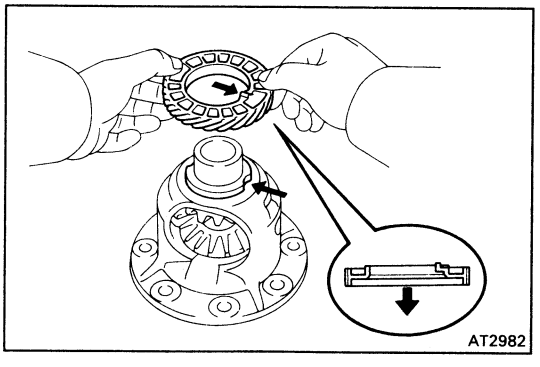

(b) Install the speedometer drive gear to the differential case.

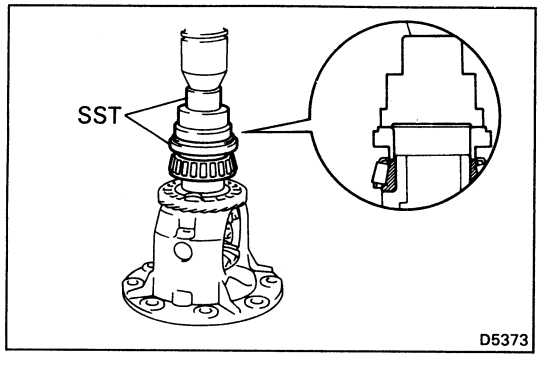

(c) Using SST and press, press the side bearing into the differential case.

SST 09350-32014 (09351-32090, 09351-32120)

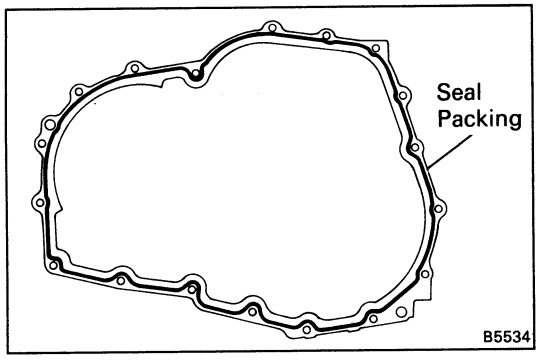

7. ADJUST SIDE BEARING PRELOAD

(a) Remove any packing material and be careful not to get oil on the contacting surfaces of the transaxle housing or transmission case.

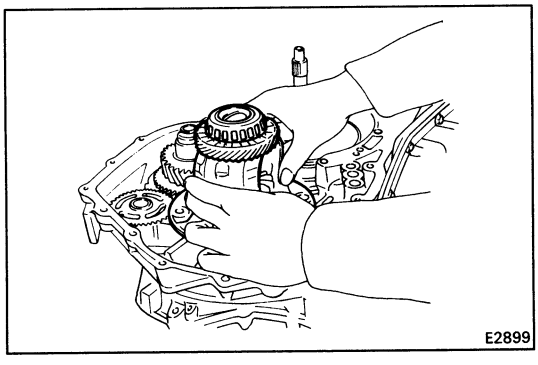

(b) Install the differential to the transaxle case.

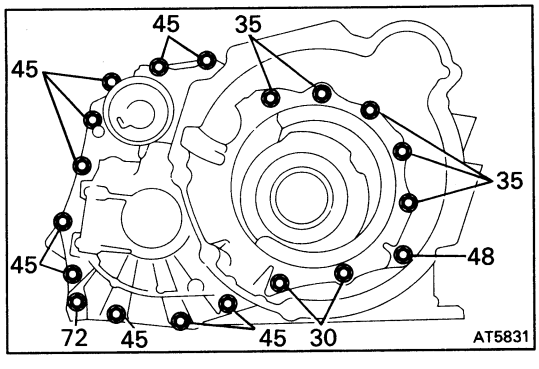

(c) Install the transaxle housing to the transaxle case.

(b) Install and tighten the bolts.

Torque: 300 kg-cm (22 ft-lb, 29 N·m)

HINT: Each bolt length (mm) is indicated in the illustration.

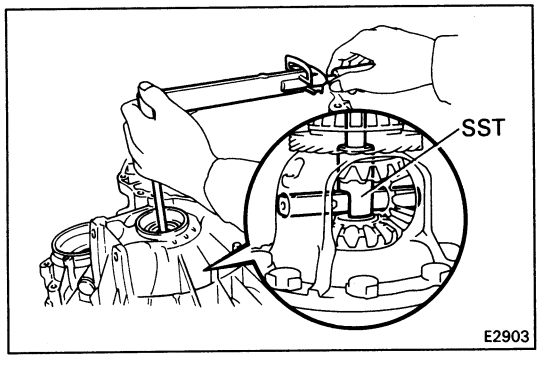

(e) Using SST, rotate the differential in both directions to snug the bearing down.

SST 09564-32011

(f) Using SST and a torque meter, measure the preload of the side bearing.

SST 09564-32011

Preload (at starting):

New bearing 8 – 14 kg-cm (6.9 – 12.2 in.-lb, 0.8 – 1.4 N·m)

Used bearing 4 – 7 kg-cm (3.5 – 6.1 in.-lb, 0.4 – 0.7 N·m)

If the preload is not within specification, remove the differential from the transaxle case. Re-select the transaxle case side adjusting shim.

Thickness				mm (in.)
2.00 (0.0787)	2.20 (0.0866)	2.40 (0.0945)	2.60 (0.1024)	2.80 (0.1102)
2.05 (0.0807)	2.25 (0.0886)	2.45 (0.0965)	2.65 (0.1043)	2.85 (0.1122)
2.10 (0.0827)	2.30 (0.0906)	2.50 (0.0984)	2.70 (0.1063)	2.90 (0.1142)
2.15 (0.0846)	2.35 (0.0925)	2.55 (0.1004)	2.75 (0.1083)	

HINT: The preload will change about 3 – 4 kg-cm (2.6 – 3.5 in.-lb, 0.3 – 0.4 N·m) with each shim thickness.

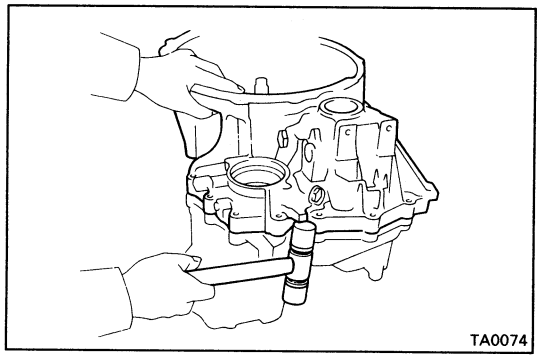

(g) Remove the bolts and transaxle housing.

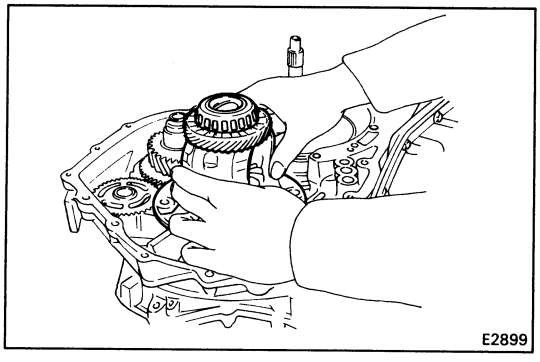

(h) Remove the differential from the transaxle case.

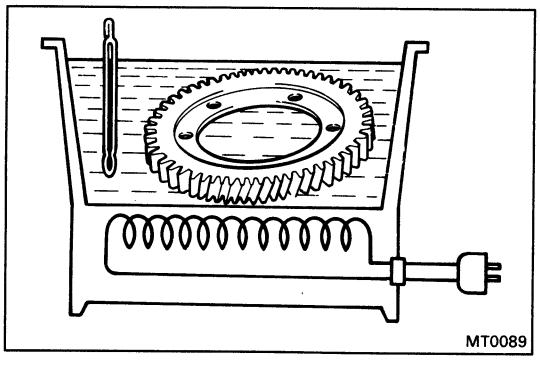

8. INSTALL RING GEAR TO DIFFERENTIAL

(a) Clean the contact surface of the differential case.

(b) Heat the ring gear to about 100°C (212°F) in an oil bath.

NOTICE: Do not heat the ring gear above 110°C (230°F)

(c) Clean the contact surface of the ring gear with cleaning solvent.

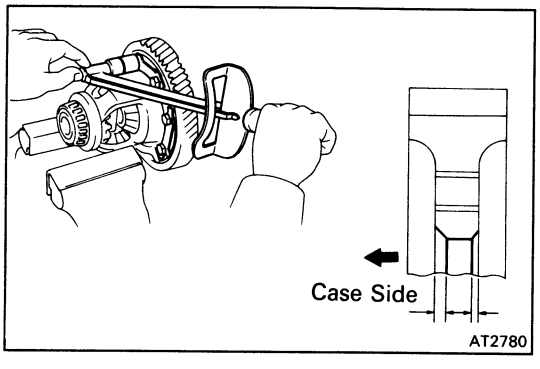

(d) Quickly install the ring gear on the differential case.

(e) Install new locking plates and set bolts.

HINT: Tighten the set bolts uniformly and a little at a time. Torque the bolts.

Torque: 985 kg-cm (71 ft-lb, 97 N·m)

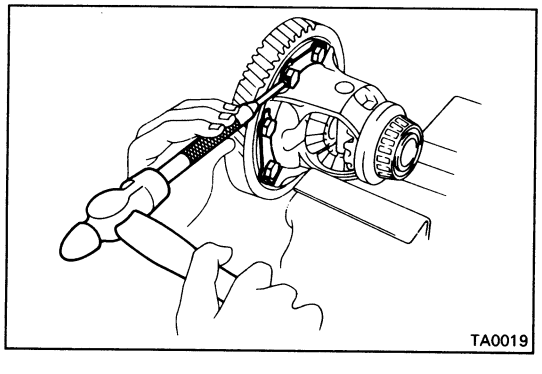

(f) Using a hammer and drift punch, stake the locking plates.

HINT: Stake one claw flush with the flat surface of the nut. For the claw contacting the protruding portion of the nut, stake only the half on the tightened side.

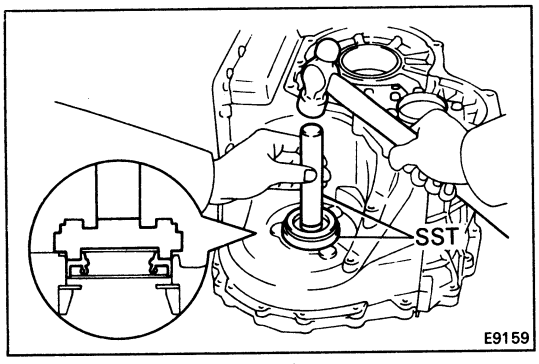

9. INSTALL OIL SEAL OF TRANSAXLE CASE

(a) Using SST and a hammer, drive in a new oil seal.

SST 09350-32014 (09351-32130, 09351-32111)

(b) Coat the lip of oil seal with MP grease.

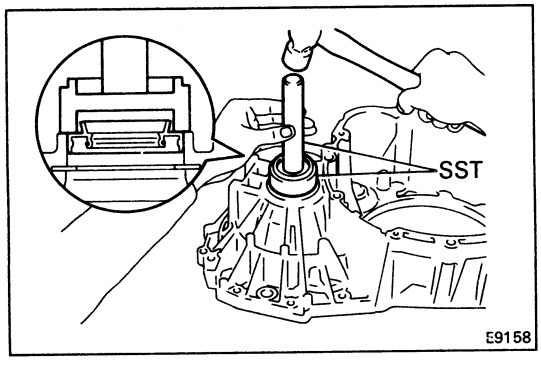

10. INSTALL OIL SEAL OF TRANSAXLE HOUSING

(a) Using SST and a hammer, drive in a new oil seal.

SST 09350-32014 (09351-32130, 09351-32150)

(b) Coat the lip of oil seal with MP grease.

INSTALLATION OF COMPONENT PARTS

(See pages AT-52 to 54)

Disassembly, inspection and assembly of each component group have been indicated in the preceding chapter. Before assembly, make sure again that all component groups are assembled correctly.

If something wrong is found in a certain component group during assembly, inspect and repair this group immediately.

Recommended ATF: DEXRON® II

GENERAL NOTES:

1. The automatic transmission is composed of highly precision-finished parts, necessitating careful inspection before assembly because even a small nick could cause fluid leakage or affect performance.
2. Before assembling new clutch discs, soak them in automatic transmission fluid for at least two hours.
3. Apply automatic transmission fluid on sliding or rotating surfaces of parts before assembly.
4. Use petroleum jelly to keep small parts in their place.
5. Do not use adhesive cements on gaskets and similar parts.
6. When assembling the transmission, sure to use new gaskets and O-rings.
7. Dry all parts with compressed air – never use shop rags.

8. Be sure to install the thrust bearings and races in the correct direction and position.

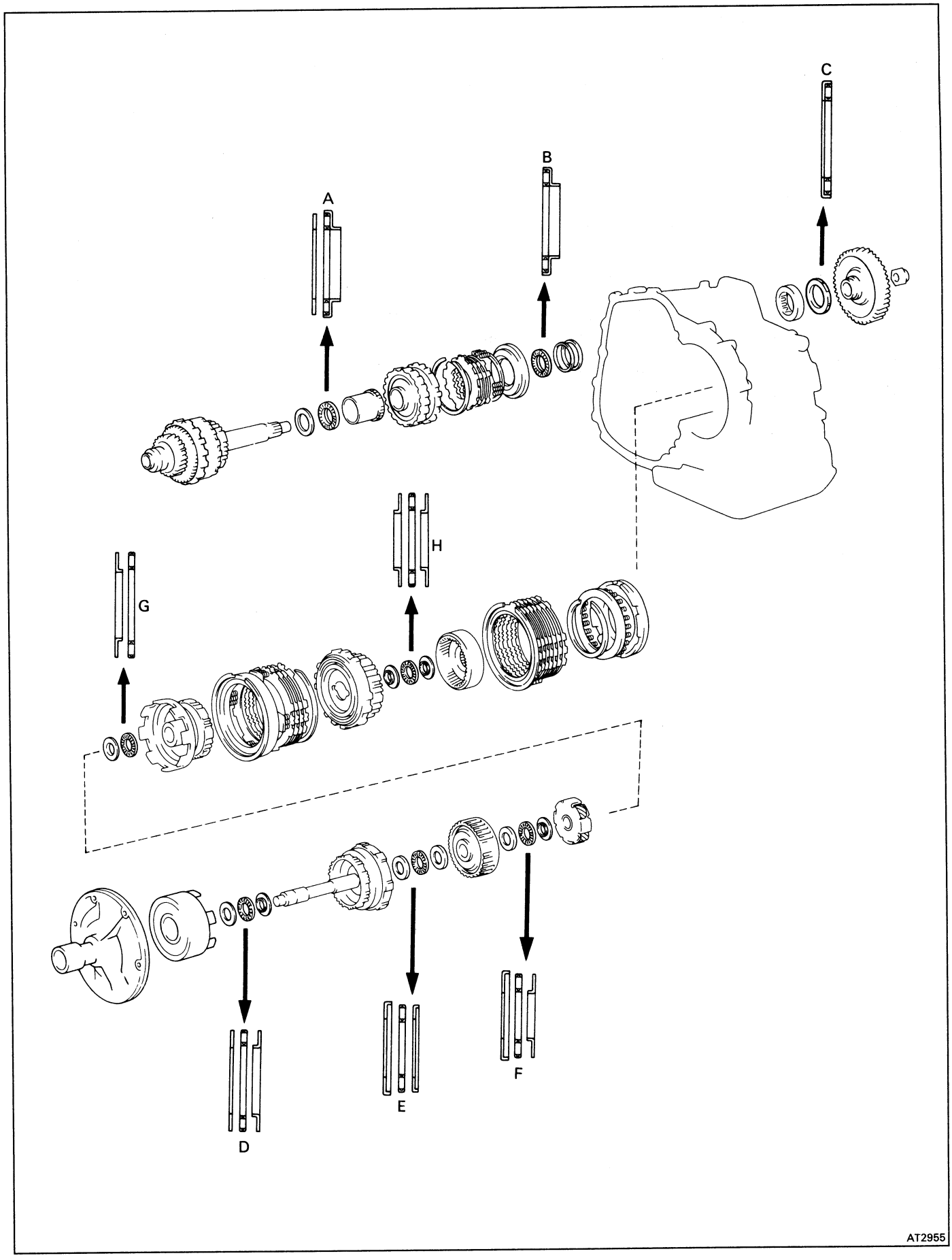

mm (in.)

		A	B	C	D	E	F	G	H
Front Bearing Race	Outer Diameter	41.8 (1.646)	–	–	43.0 (1.693)	37.9 (1.492)	←	45.0 (1.772)	37.3 (1.469)
	Inner Diameter	30.0 (1.181)	–	–	30.5 (1.201)	22.0 (0.866)	←	28.0 (1.102)	24.1 (0.949)
Thrust Bearing	Outer Diameter	43.7 (1.720)	45.2 (1.780)	57.7 (2.272)	42.0 (1.654)	36.1 (1.421)	←	45.0 (1.772)	37.6 (1.480)
	Inner Diameter	31.0 (1.220)	←	41.0 (1.614)	28.9 (1.138)	22.2 (0.874)	←	30.0 (1.181)	24.0 (0.945)
Rear Bearing Race	Outer Diameter	–	–	–	42.0 (1.654)	35.7 (1.406)	35.0 (1.378)	–	37.6 (1.480)
	Inner Diameter	–	–	–	27.1 (1.067)	23.0 (0.906)	19.0 (0.748)	–	22.2 (0.874)

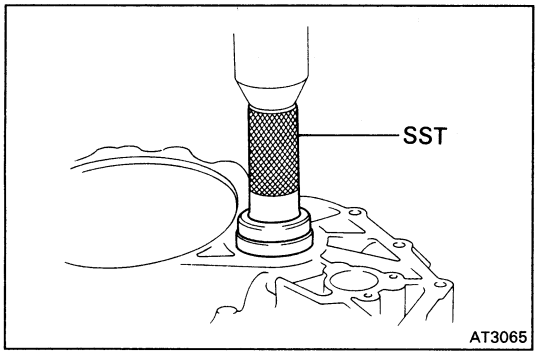

1. INSTALL BEARING TO TRANSAXLE HOUSING

(a) Using SST and a press, press the bearing into the transaxle housing.

SST 09350-32014 (09351-32140)

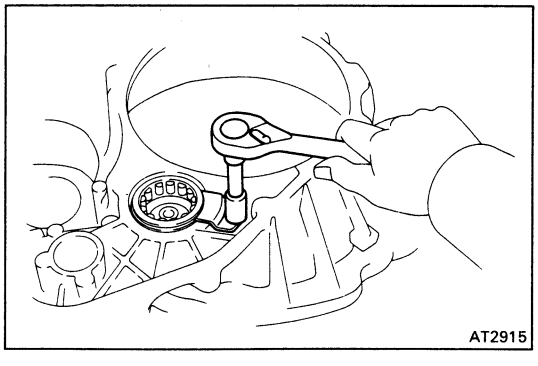

(b) Install the bearing stopper with a bolt.

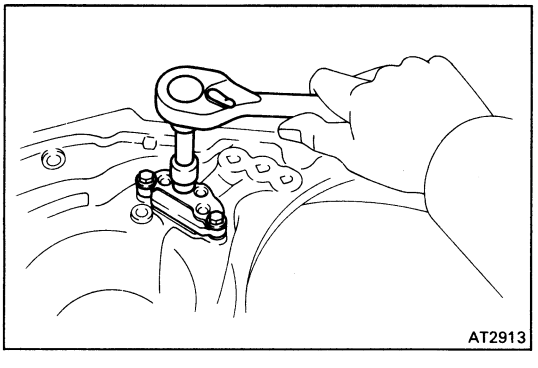

2. INSTALL NEW GASKET AND OIL TUBE APPLY COVER

Install the new gasket and oil tube apply cover, and tighten the three bolts.

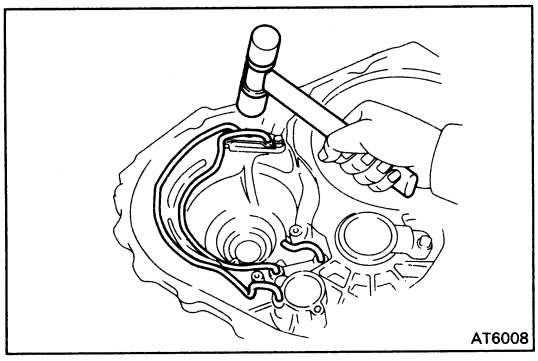

3. INSTALL OIL TUBES

(a) Using a plastic hammer, install the three oil tubes.

NOTICE: Be careful not to bend or damage the tubes.

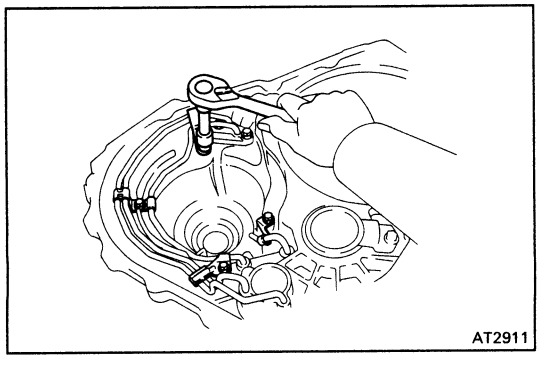

(b) Install the four tube clamps.

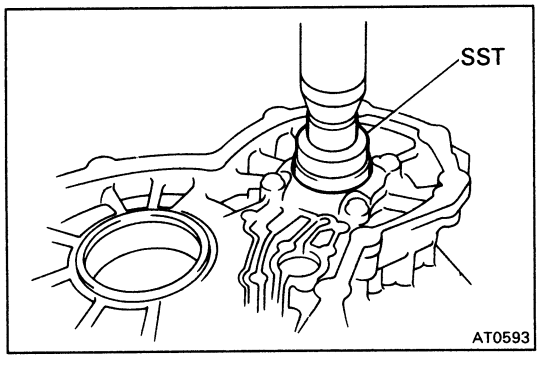

4. INSTALL BEARING TO TRANSMISSION CASE

Using SST and a press, press the bearing into the transmission case.

SST 09350-32014 (09351-32090)

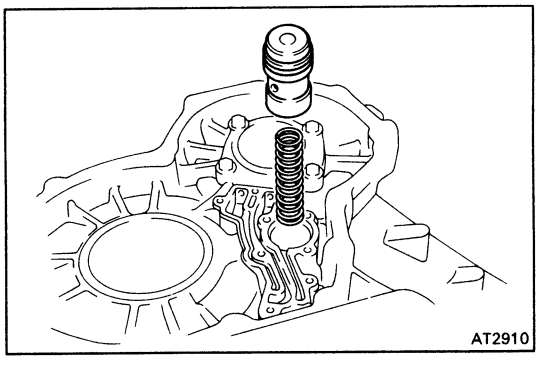

5. INSTALL B_4 ACCUMULATOR PISTON AND SPRING

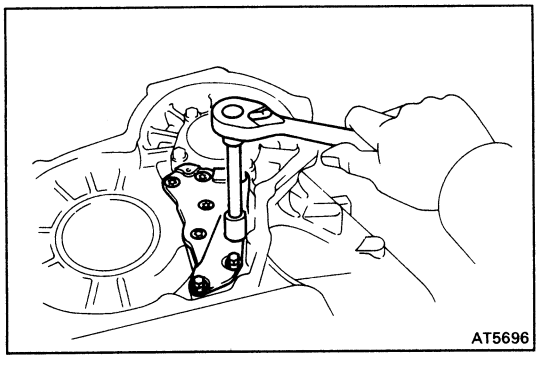

6. INSTALL OIL GALLERY COVER AND GASKET

(a) Clean the threads of the screws and case with white gasoline.

(b) Install the new gasket and oil gallery cover in place.

(c) Install and tighten the three bolts.

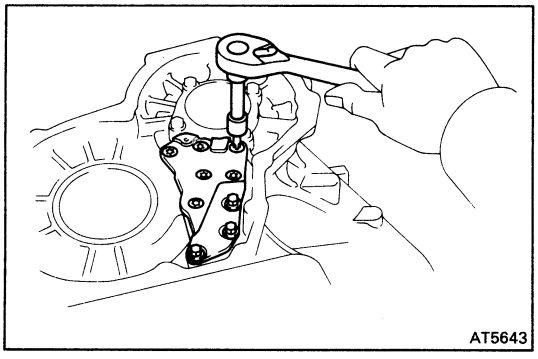

(d) Apply seal packing or equivalent to the six screws.

Seal packing: Part No. 08833-00070, THREE BOND 1324 or equivalent

(e) Using a torx wrench, install and tighten the three screws.

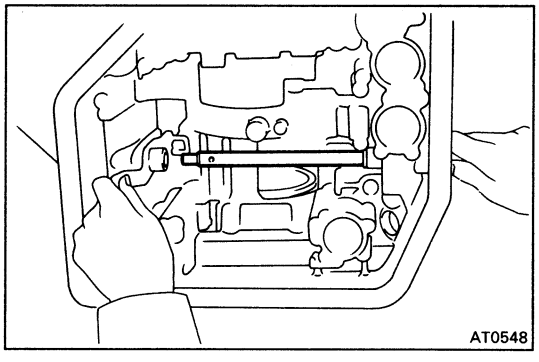

7. INSTALL MANUAL VALVE SHAFT AND LEVER

(a) Install the parking lock rod to the manual valve lever.

(b) Slide in the shaft and install the washer, new spacer and manual lever.

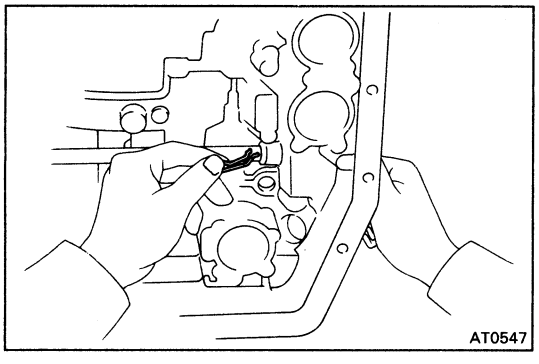

(c) Install the retaining spring.

HINT: Make sure there is a washer between the retaining spring and case.

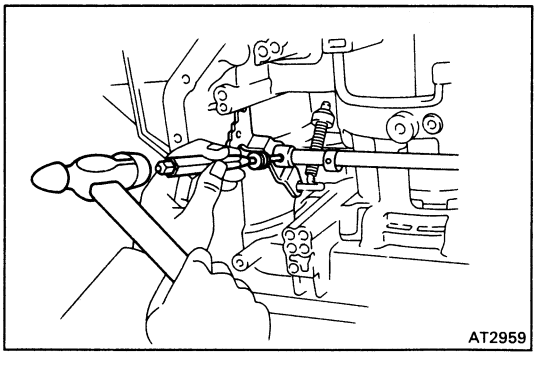

8. INSTALL PIN

(a) Using a punch and hammer, drive in the pin.

(b) Position the spacer and stake it.

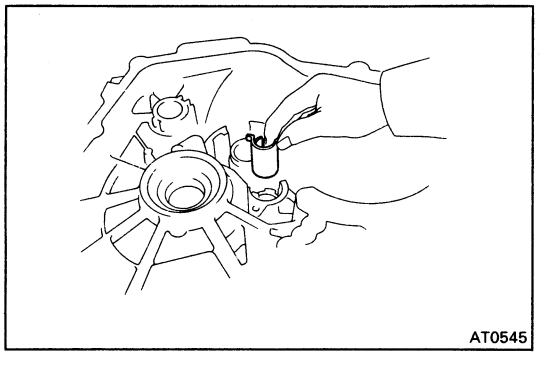

9. INSTALL CAM GUIDE BRACKET

Install the cam guide bracket and then insert the parking lock rod into the guide bracket.

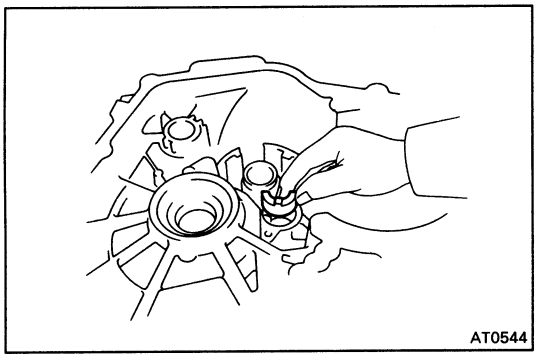
AT0544

10. INSTALL PARKING LOCK SLEEVE

Install the parking lock sleeve protruding portion upward.

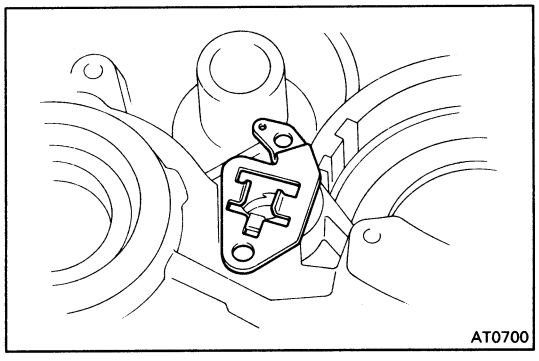
AT0700

11. PLACE STOPPER PLATE

Place the stopper plate on the protruding portion of lock sleeve.

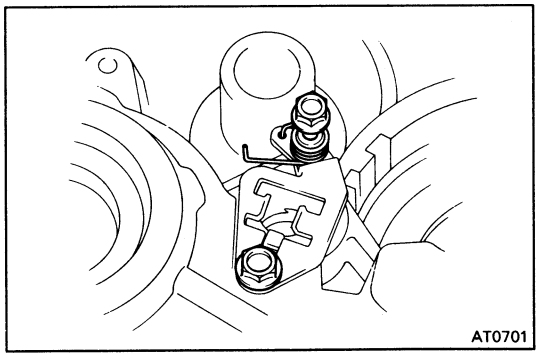
AT0701

12. INSTALL GUIDE SLEEVE AND SPRING

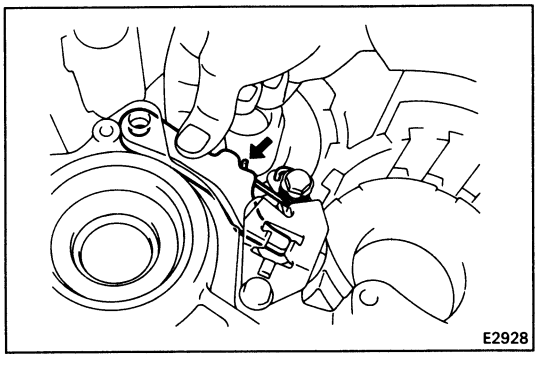
E2928

13. INSTALL PARKING LOCK PAWL, PAWL SHAFT AND SHAFT CLAMP

(a) Install the parking lock pawl.

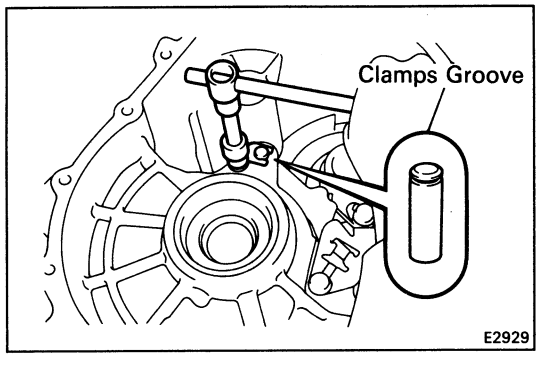

E2929

(b) Insert the parking lock pawl shaft and install the shaft clamp.

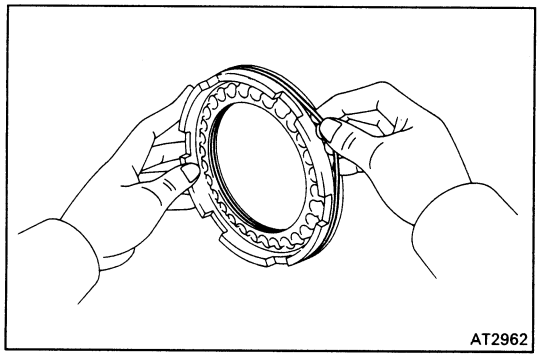

14. INSTALL FIRST AND REVERSE BRAKE PISTON

(a) Install the two new O-rings to the piston.

(b) Coat the O-rings with ATF.

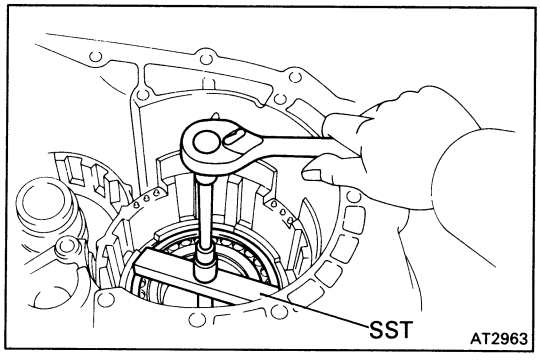

(c) Place the piston into the bore of the case, facing the spring seats upward.

(d) Using SST, press in the piston.

SST 09350-32014 (09351-32040)

HINT: Be careful not to damage the O-rings.

(e) Remove SST.

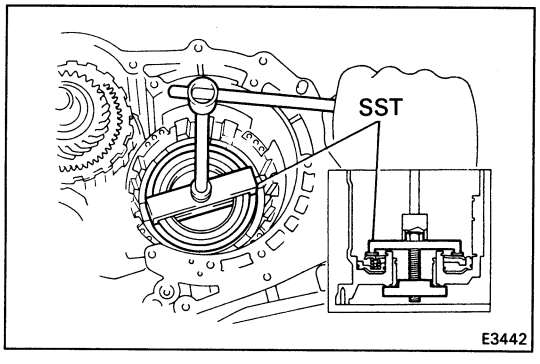

15. INSTALL PISTON RETURN SPRING AND SNAP RING

(a) Install the piston return spring assembly and snap ring in place.

(b) Set SST, and tighten the bolt gradually to compress the springs.

SST 09350-32014 (09351-32040)

NOTICE: Avoid bending the spring retainer by over-tightening the bolt.

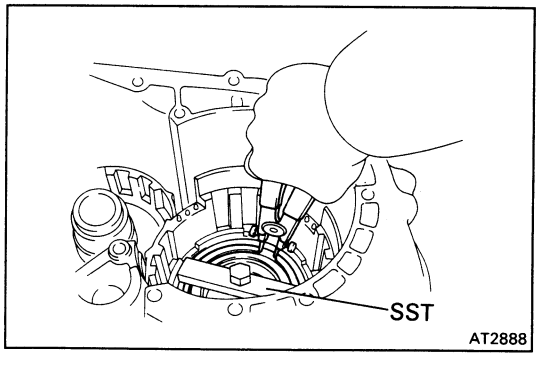

(c) Using snap ring pliers, install the snap ring.

HINT: Visually check to make sure it is fully seated and centered by the three lugs on the spring retainer.

Be sure the end gap of snap ring is not aligned with the spring retainer claw.

(b) Remove SST.

SST 09350-32014 (09351-32040)

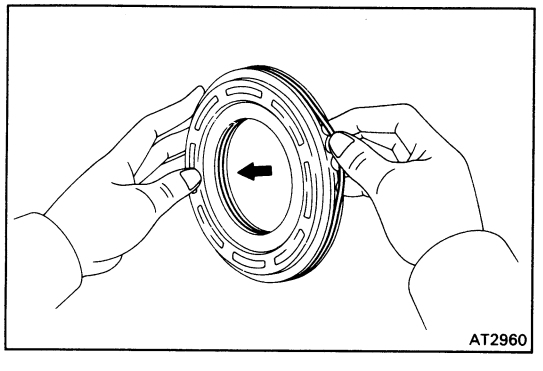

16. INSTALL UNDERDRIVE BRAKE PISTON

(a) Coat the O-rings with ATF.

(b) Install the two new O-rings to the piston.

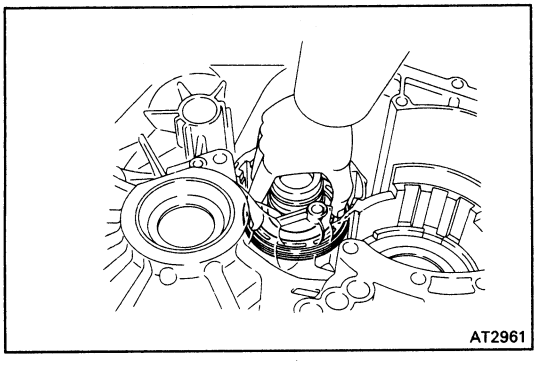

(c) Place the piston into the case with the cup side up, being careful not to damage the O-rings.

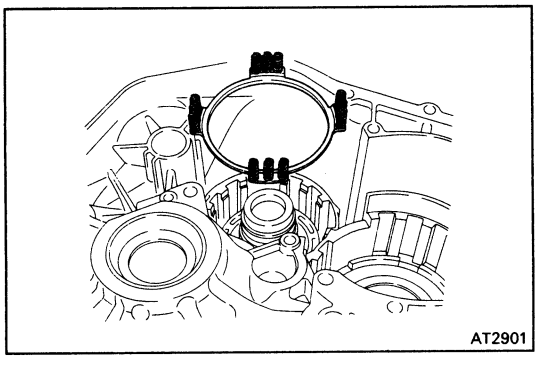

17. INSTALL RETURN SPRING

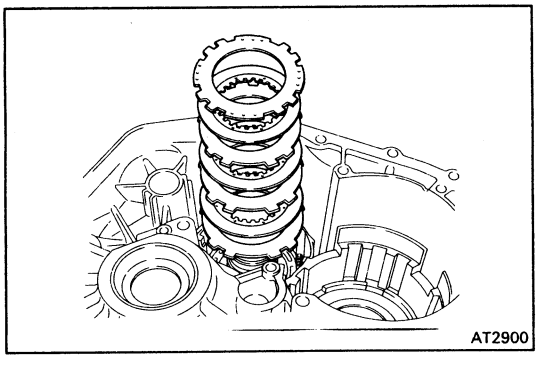

18. INSTALL PLATES, DISCS AND FLANGE

(a) Install in order: D = Disc P = Plate F = Flange
P – D – P – D – P – D – F

HINT: Install the flange with the flat end facing downward.

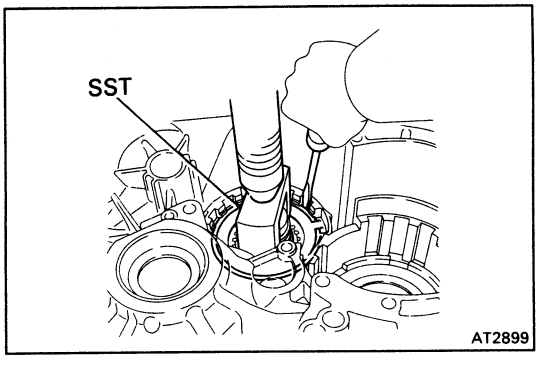

(b) Place SST on the flange, and compress the flange with a press.

SST 09350-32014 (09351-32070)

(c) Install the snap ring.

HINT: Be sure the end gap of the snap ring is not aligned with one of the cutouts.

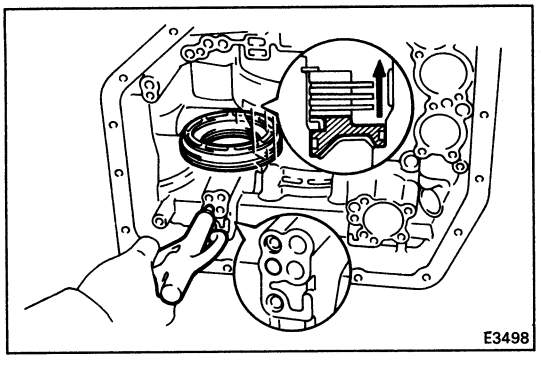

19. CONFIRM THAT UNDERDRIVE BRAKE PISTON MOVES

Using compressed air, confirm that the underdrive brake piston moves smoothly.

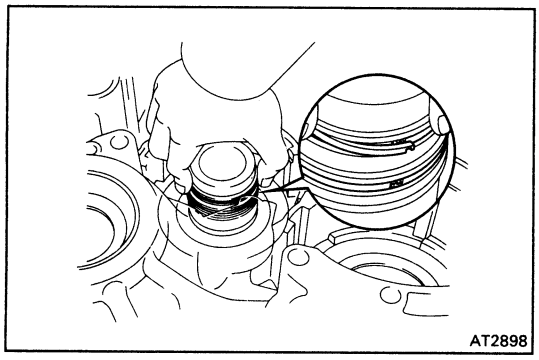

20. INSTALL OIL SEAL RINGS TO TRANSMISSION CASE

Install the two oil seals to the transmission case.

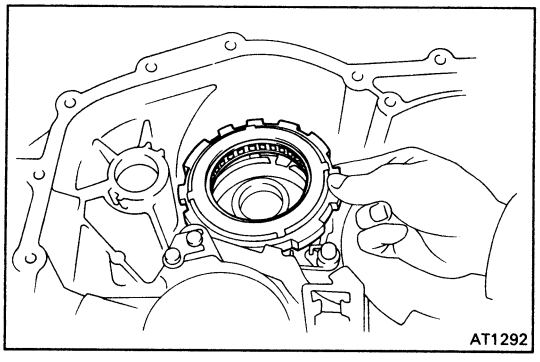

21. INSTALL UNDERDRIVE ONE-WAY CLUTCH

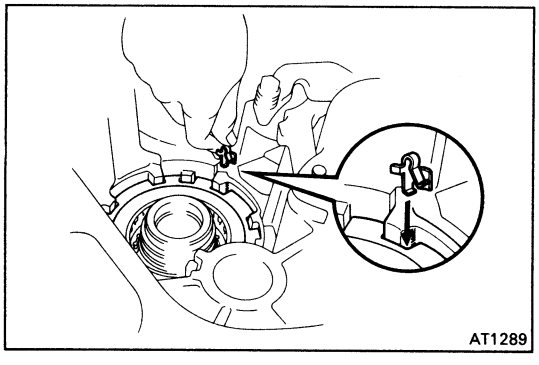

22. INSTALL ANTI-RATTLE CLIP

In the place shown in the figure (the space between the one-way clutch outer race and case), push the anti-rattle clip in until you hear the "click".

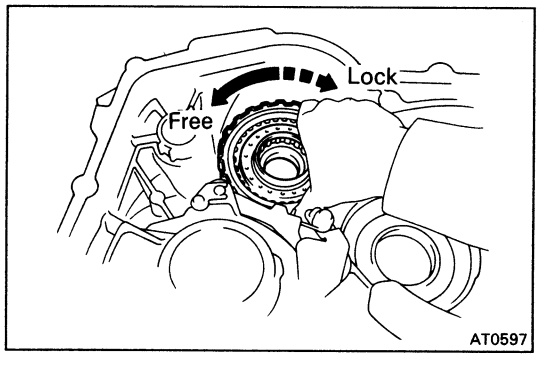

23. INSTALL UNDERDRIVE CLUTCH ASSEMBLY

(a) Align the flukes of discs in the underdrive brake.

(b) Install the clutch assembly.

(c) Turn the clutch assembly. The clutch assembly should turn freely counterclockwise and should lock clockwise.

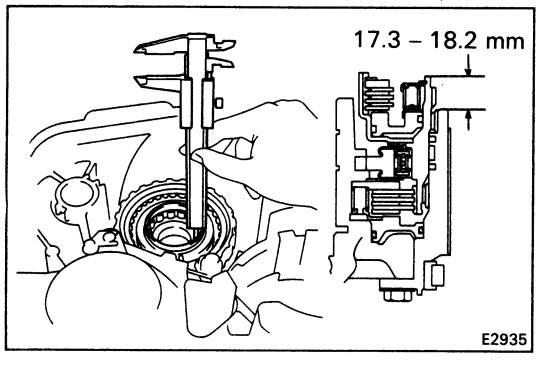

24. CHECK HEIGHT OF CLUTCH ASSEMBLY

Using vernier calipers, check the height from the sleeve to the inner race.

Height: 17.3 – 18.2 mm (0.681 – 0.717 in.)

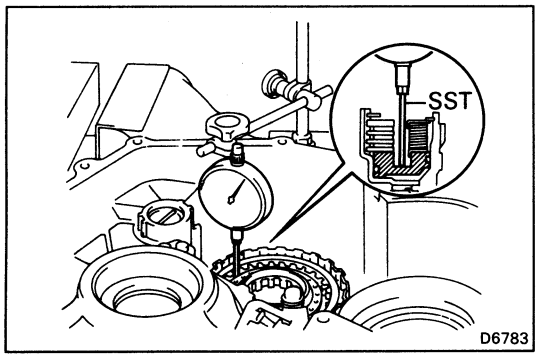

25. CHECK PISTON STROKE OF UNDERDRIVE CLUTCH

(a) Set a dial indicator (long type pick or SST) as shown.

SST 09350-32014 (09351-32190)

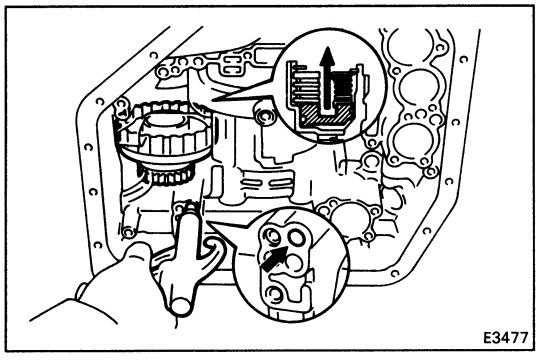

(b) Applying and releasing the compressed air (4 – 8 kg/cm², 57 – 114 psi, 392 – 785 kPa), measure the underdrive clutch piston stroke.

Piston stroke: 1.22 – 1.54 mm (0.0480 – 0.0606 in.)

If the piston stroke is less than limit, parts may have been misassembled. Check them.

If the piston stroke is nonstandard, select another flange.

HINT: There are two different flange thicknesses.

Flange thickness: 2.30 mm (0.0906 in.)
2.50 mm (0.0984 in.)
2.70 mm (0.1063 in.)

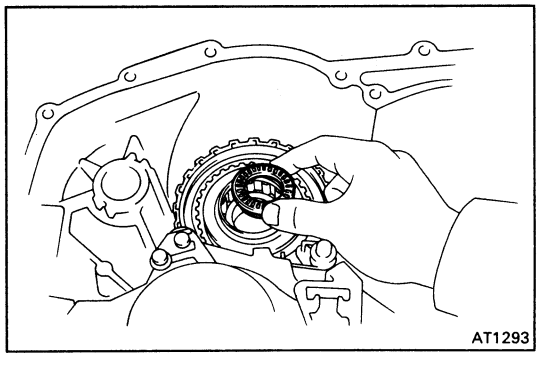

26. INSTALL BEARING WITH RACE

Install the thrust bearing with race, with the bearing facing upward.

Bearing: Outer diameter 45.2 mm (1.780 in.)
Inner diameter 31.0 mm (1.220 in.)

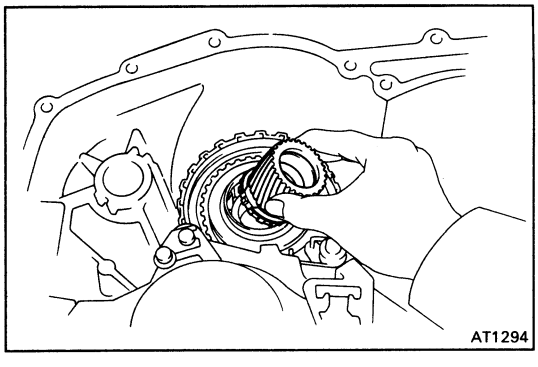

27. INSTALL SUN GEAR TO CASE

Install the sun gear of the counter shaft to the case.

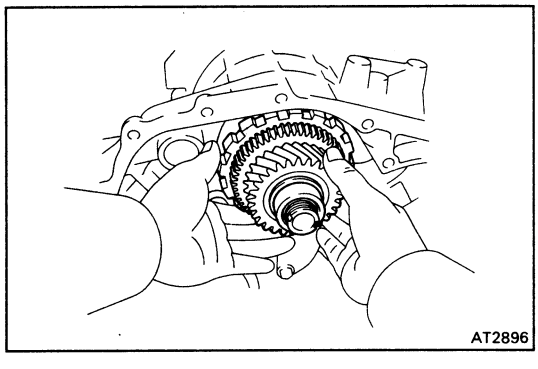

28. INSTALL COUNTER SHAFT ASSEMBLY

(a) Align the flukes of the discs in the underdrive clutch.

(b) Install the counter shaft assembly.

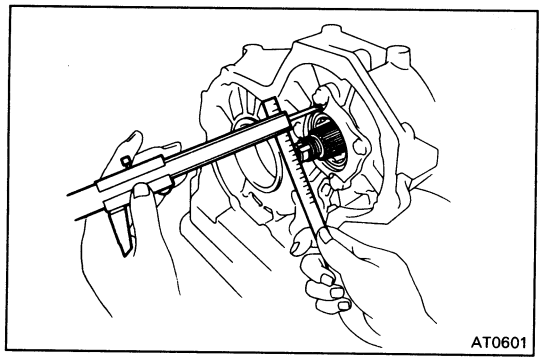

29. CHECK HEIGHT OF COUNTER SHAFT

Using vernier calipers, measure the distance between the tip of the counter shaft and bolt seat of the clutch support.

Height: 33.3 – 35.5 mm (1.311 – 1.398 in.)

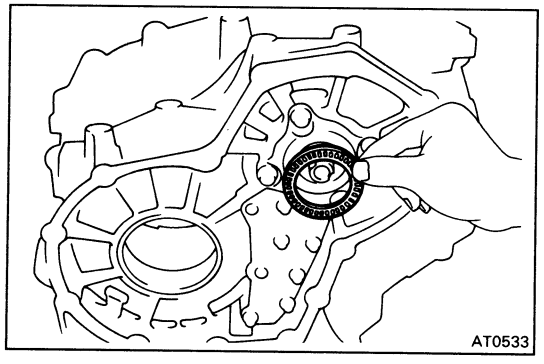

30. INSTALL THRUST NEEDLE BEARING

Bearing: Outer diameter 57.7 mm (2.272 in.)
Inner diameter 41.0 mm (1.614 in.)

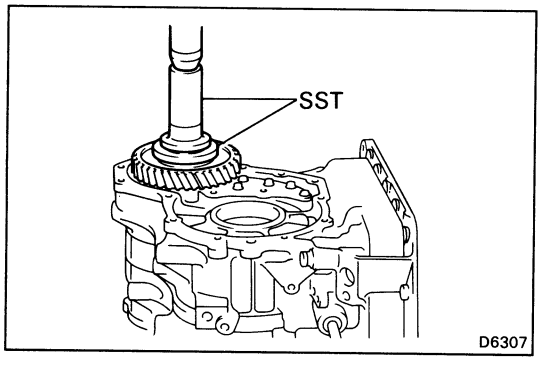

31. INSTALL COUNTER DRIVEN GEAR

Using SST and press, press in the driven gear.

SST 09350-32014 (09351-32100, 09351-32140)

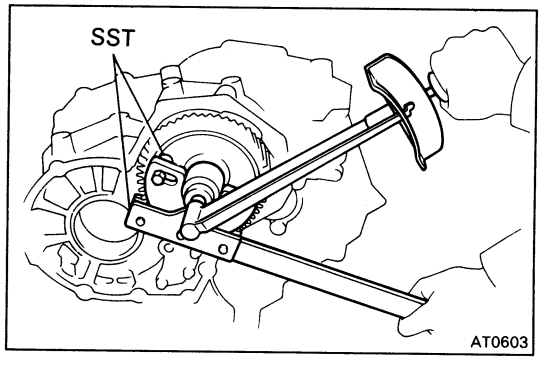

32. TIGHTEN NEW LOCK NUT

(a) Using SST to hold the driven gear, tighten a new lock nut.

SST 09330-00021 and 09350-32014 (09351-32032)

Torque: 1,600 kg-cm (116 ft-lb, 157 N·m)

(b) Remove SST.

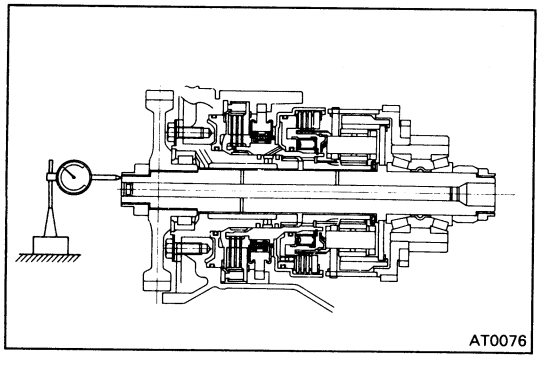

33. CHECK END PLAY OF COUNTER SHAFT

Using a dial indicator, measure the end play of the counter shaft.

End play: 0.23 – 0.89 mm (0.0091 – 0.0350 in.)

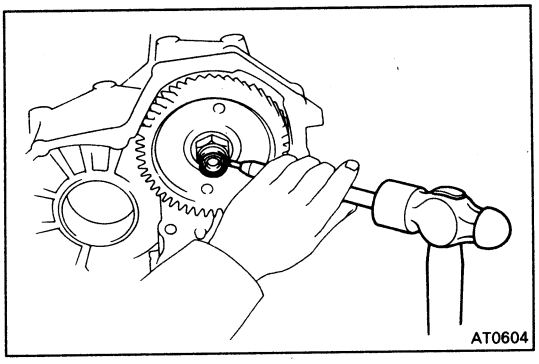

34. STAKE LOCK NUT

Using a punch and hammer, stake the lock nut.

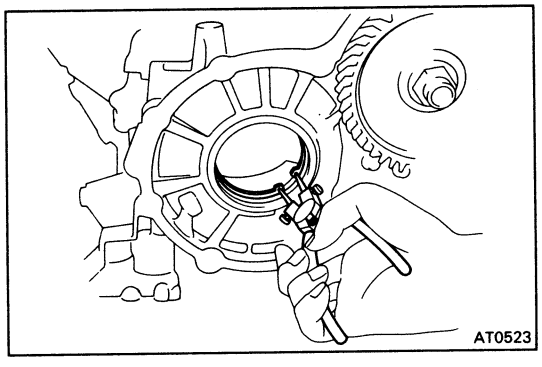

35. INSTALL SNAP RING TO TRANSMISSION CASE

Using snap ring pliers, install the snap ring to the transmission case.

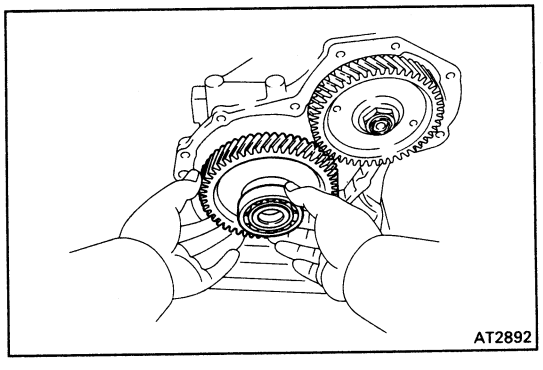

36. INSTALL INTERMEDIATE SHAFT

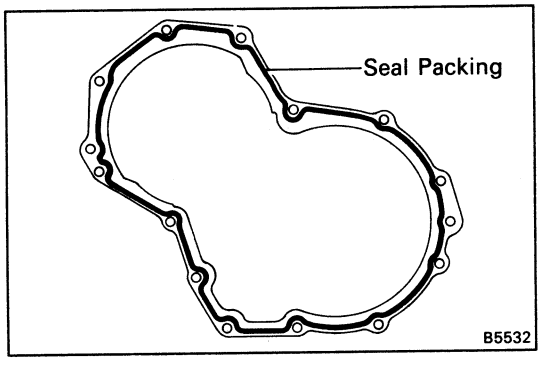

37. INSTALL TRANSAXLE REAR COVER

(a) Remove any packing material and be careful not to get oil on the contacting surfaces of the transaxle rear cover or transmission case.

(b) Apply seal packing to the rear cover as shown.

Seal packing: Part No.08833-00090, THREE BOND 1131, LOCTITE 518 or equivalent

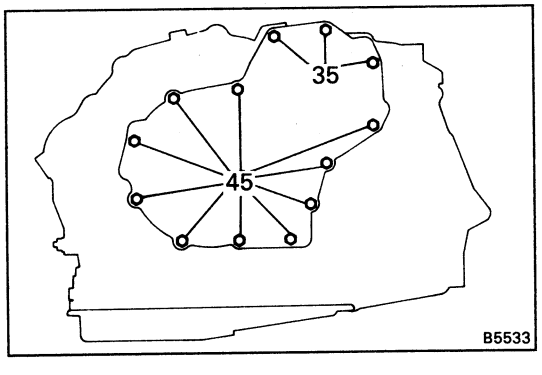

(c) Install and tighten the thirteen bolts.

Torque: 300 kg-cm (22 ft-lb, 29 N·m)

HINT: Each bolt length (mm) is indicated in the figure.

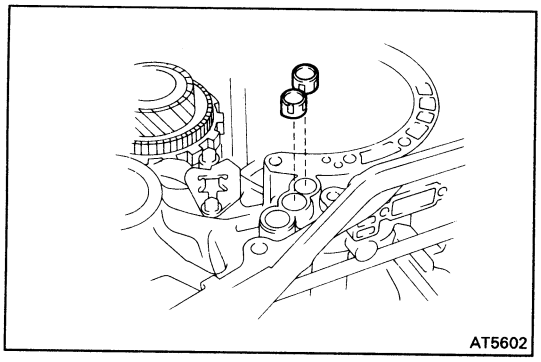

38. INSTALL NEW APPLY GASKETS

Install the two new apply gaskets.

HINT: The oil seal may be inserted with either end up or down.

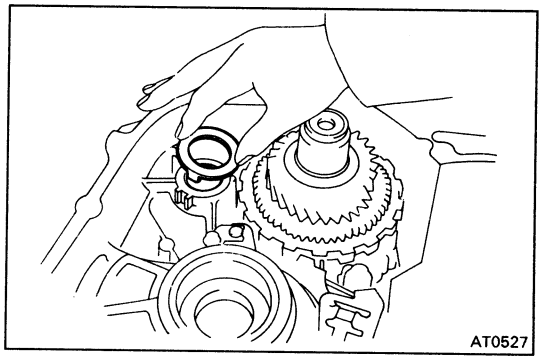

39. INSTALL GOVERNOR DRIVEN GEAR

(a) Install the thrust washer.

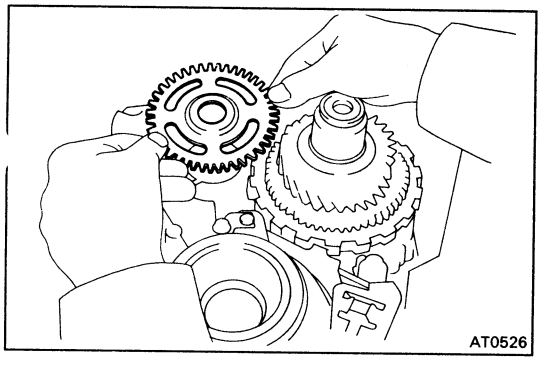

(b) Install the governor driven gear.

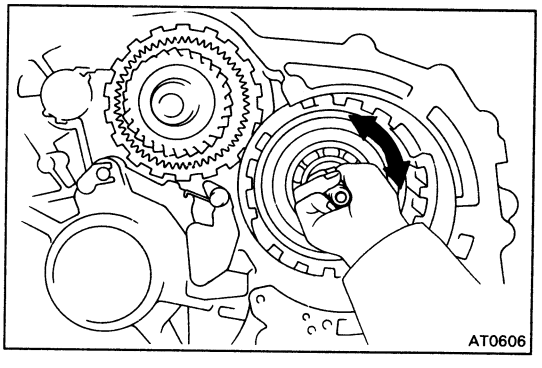

40. CHECK INTERMEDIATE SHAFT

Make sure that the intermediate shaft turns smoothly.

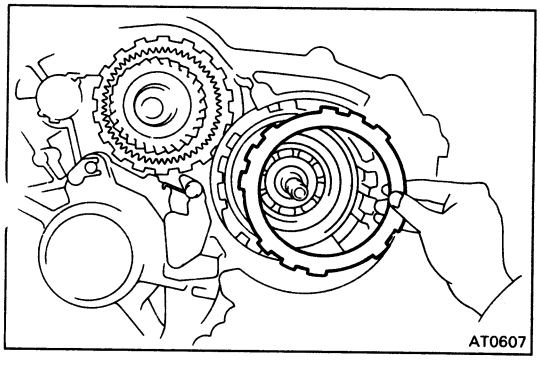

41. INSTALL DISCS, PLATES AND FLANGE

(a) Install the inner flange, facing the flat end upward.

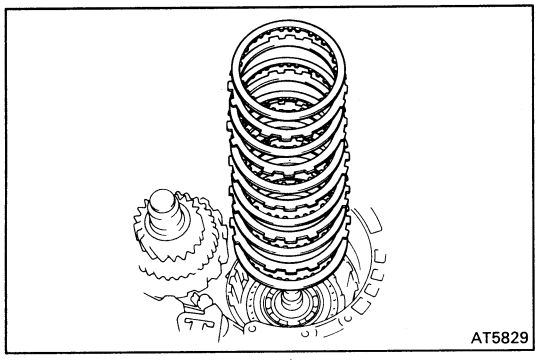

(b) Install in order: D = Disc P = Plate
D – P – D – P – D – P – D – P – D – P – D

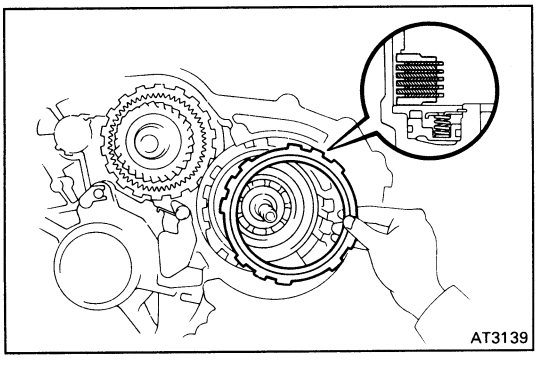

(c) Install the outer flange, the flat end facing downward.

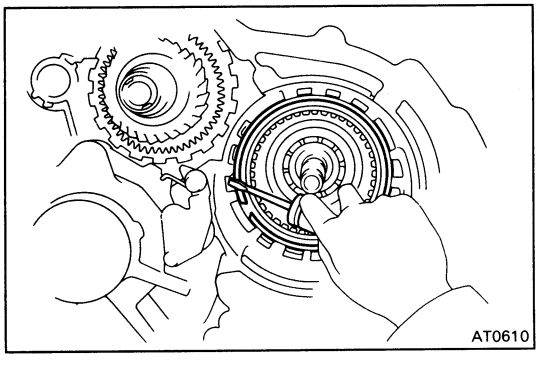

42. INSTALL SNAP RING

HINT: Be sure the snap ring end gap is not aligned with one of the cutouts.

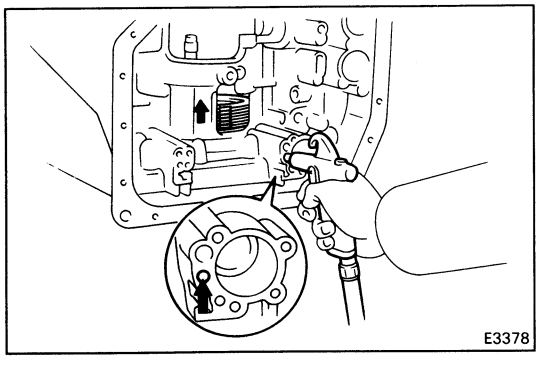

43. CONFIRM THAT FIRST AND REVERSE BRAKE PISTON MOVES

Using compressed air, confirm that the first and reverse brake piston moves smoothly.

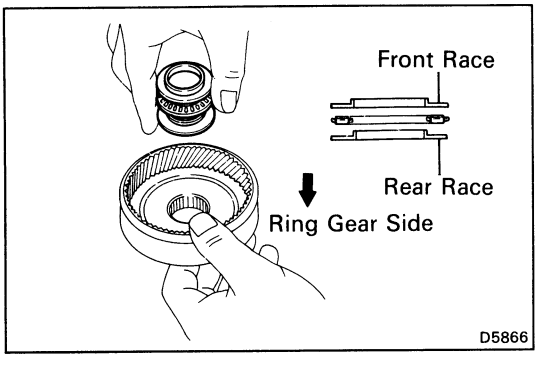

44. INSTALL REAR PLANETARY RING GEAR TO CASE

(a) Coat the races and bearing with petroleum jelly, and install them onto the ring gear as shown.

Bearing and races: mm (in.)

	Outer diameter	Inner diameter
Front Race	37.3 (1.469)	24.1 (0.949)
Bearing	37.6 (1.480)	24.0 (0.945)
Rear Race	37.6 (1.480)	22.2 (0.874)

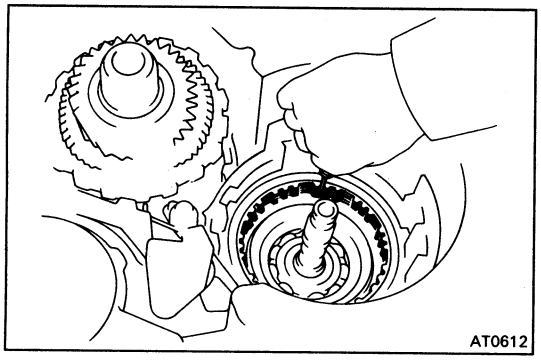

(b) Using a screwdriver, align the flukes of the discs.

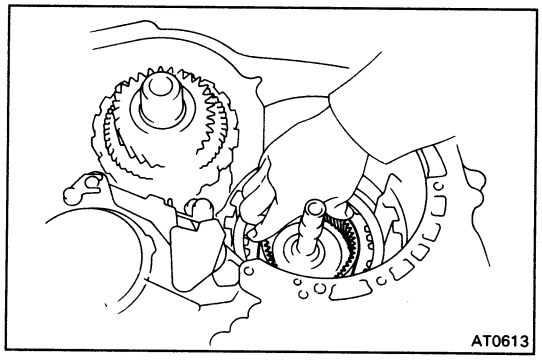

(c) Install the rear planetary ring gear into the case.

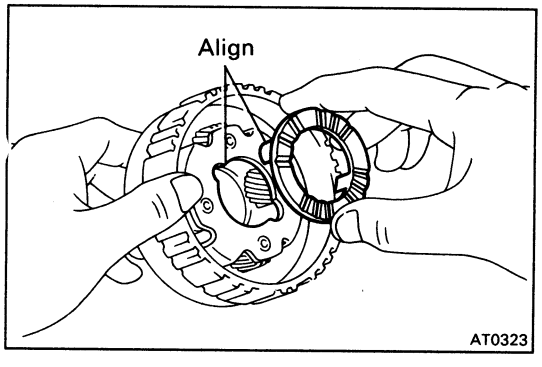

45. INSTALL REAR PLANETARY GEAR

(a) Coat thrust washer with petroleum jelly and install it onto the planetary gear.

HINT: Make sure that the different lug shapes match the openings on the gear.

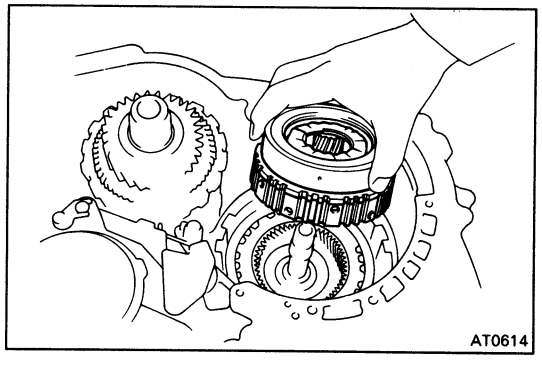

(b) Align the spline of the planetary gear with the flukes of the discs and install the planetary gear into the first and reverse brake discs.

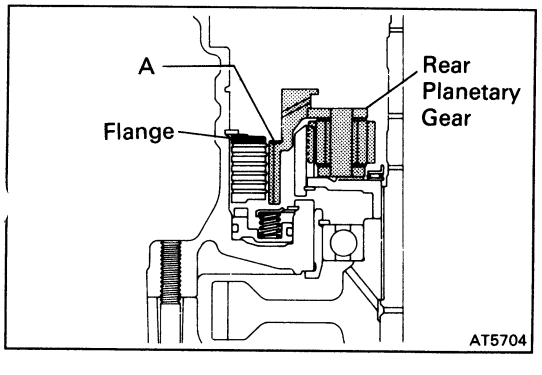

(c) Check that parts A of the rear planetary gear is below the upper surface of the flange.

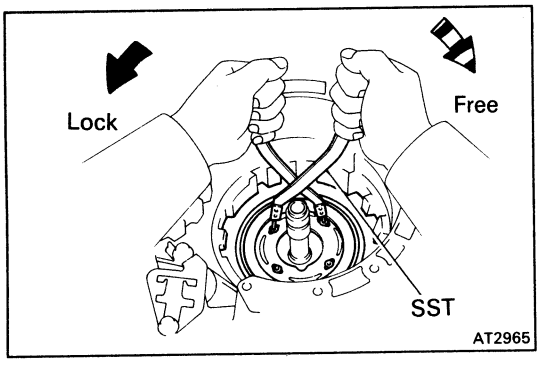

46. INSTALL NO. 2 ONE-WAY CLUTCH

(a) Place the one-way clutch into the case, the shiny side facing upward.

(b) Install the one-way clutch onto the inner race while turning the planetary gear clockwise with SST.

SST 09350-32014 (09351-32050)

(c) Check that the planetary gear turns freely clockwise and locks counterclokwise.

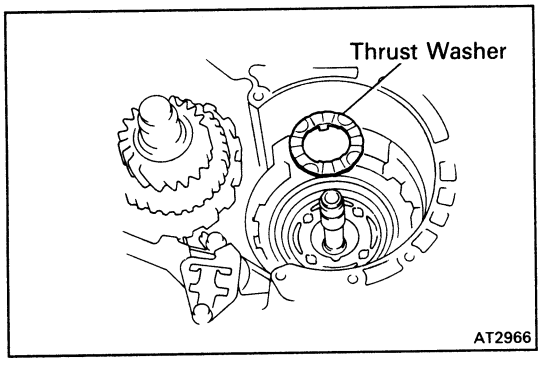

(d) Coat the thrust washer with petroleum jelly and install it onto the planetary gear.

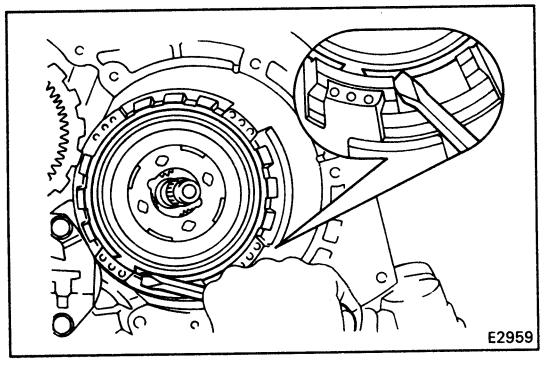

47. INSTALL SNAP RING

Be sure the end gap of the snap ring is not aligned with one of the cutouts.

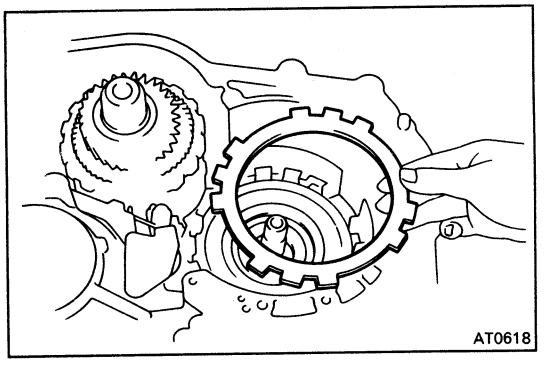

48. INSTALL SECOND BRAKE INTO CASE

(a) Install the flange, the flat side facing upward.

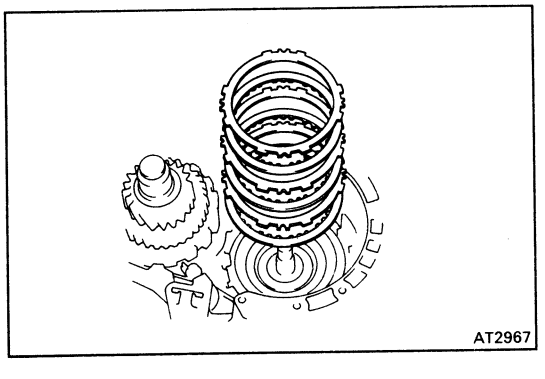

(b) Install the discs and plates in order.
D = Disc P = Plate
D – P – D – P – D – P

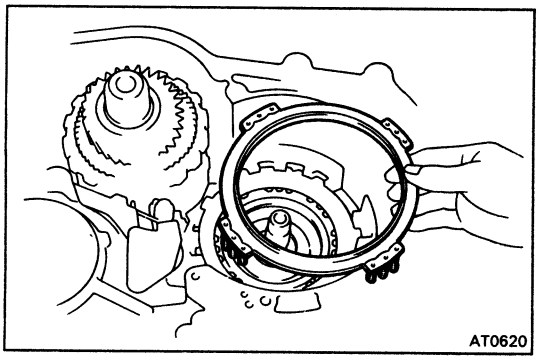

49. INSTALL SECOND BRAKE PISTON RETURN SPRING

Install each of the springs over the protrusions in the case.

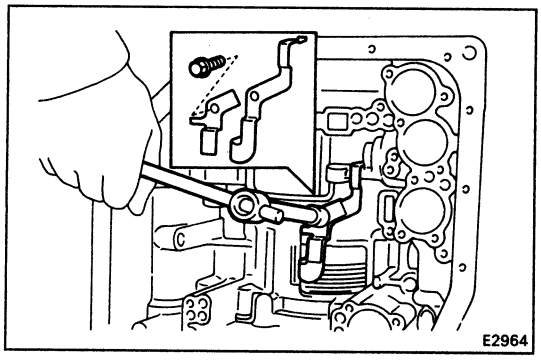

50. INSTALL SECOND COAST BRAKE BAND GUIDE

Install the band guide so that its tip touches the case.

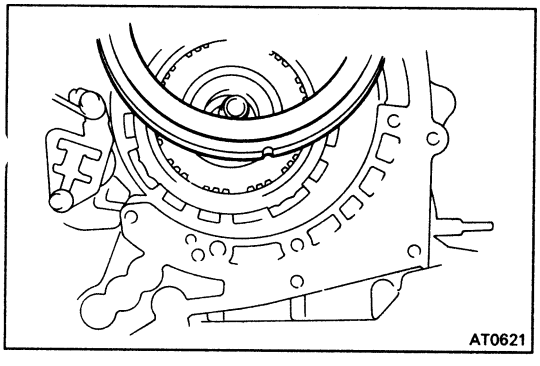

51. INSTALL SECOND BRAKE DRUM INTO CASE

Align the groove of the drum with the bolt and place it into the case.

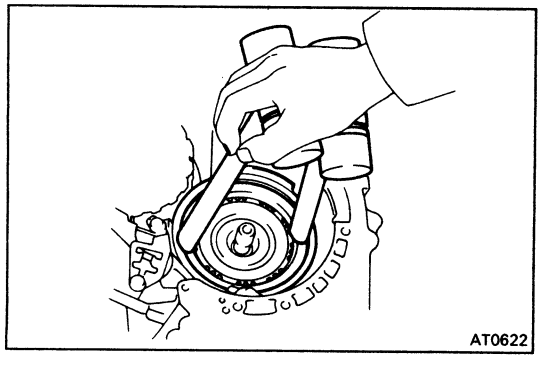

52. INSTALL SNAP RING

(a) Place the snap ring into the case so that the end gap is installed into the groove.

(b) While compressing the piston return springs over the drum with hammer handles, install the snap ring.

HINT: Be sure the end gap of the snap ring is not aligned with one of the cutouts.

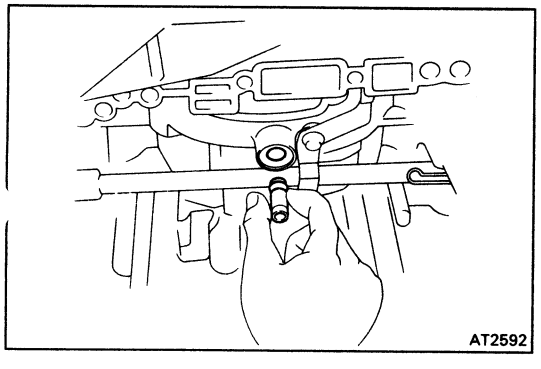

53. INSTALL SECOND BRAKE DRUM GASKET

Drive in a new drum gasket until it makes contact with the second brake drum.

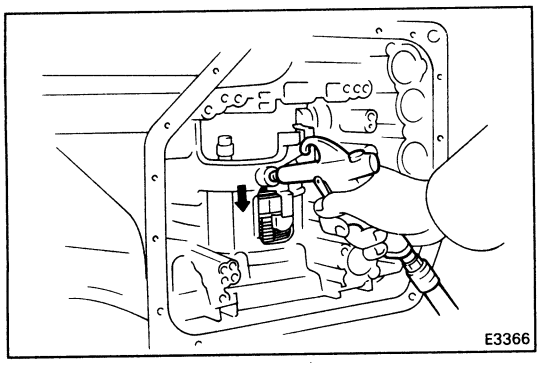
E3366

54. CONFIRM THAT SECOND BRAKE PISTON MOVES

Using compressed air, confirm that the second brake piston moves smoothly.

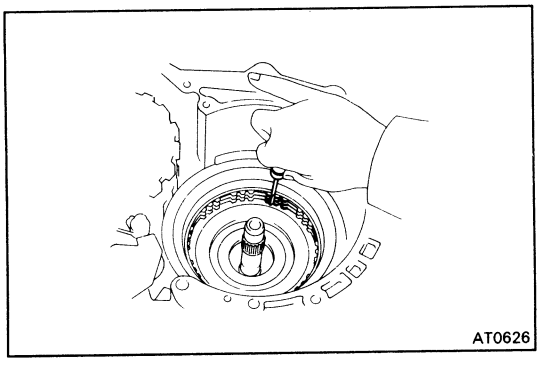
AT0626

55. INSTALL SECOND BRAKE HUB AND NO. 1 ONE-WAY CLUTCH

(a) Using a screwdriver, align the flukes of the discs in the second brake.

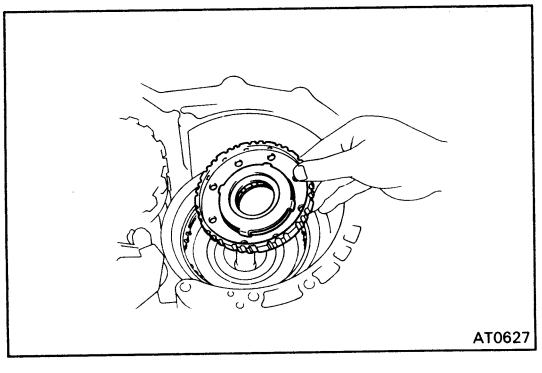
AT0627

(b) Align the spline of the hub with the flukes of the discs and install the hub to the second brake discs.

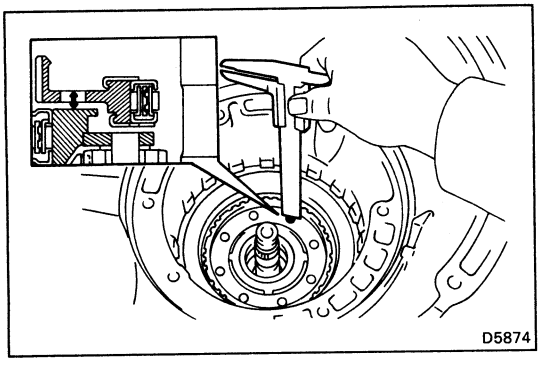
D5874

56. CHECK SECOND BRAKE HUB INSTALLATION DISTANCE

Check the distance between the surface of the second brake hub and rear planetary gear.

Distance: Approx. 5 mm (0.20 in.)

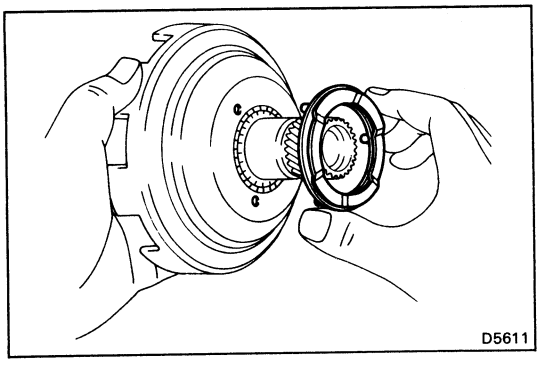
D5611

57. INSTALL SUN GEAR AND SUN GEAR INPUT DRUM

(a) Coat the thrust washer with petroleum jelly and install it on the sun gear input drum.

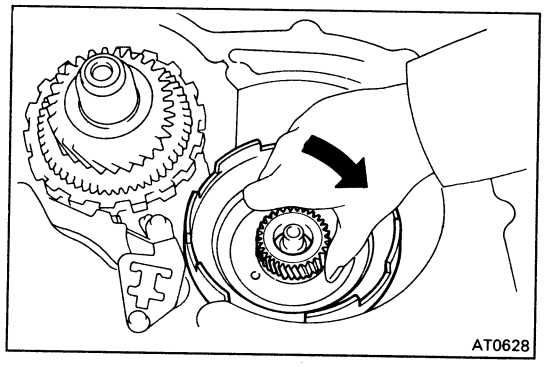

(b) While turning the sun gear clockwise, install it into the No. 1 one-way clutch.

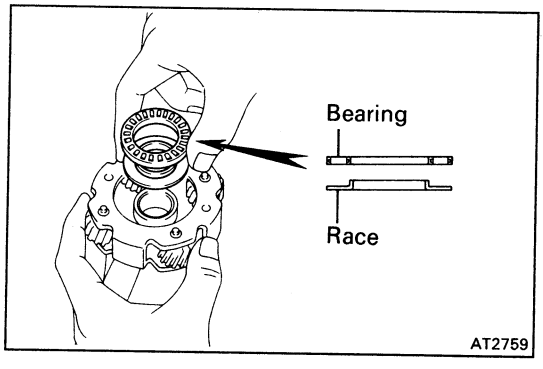

58. INSTALL FRONT PLANETARY GEAR

(a) Coat the race and bearing with petroleum jelly and install them onto the planetary gear.

Bearing and races: mm (in.)

	Outer diameter	Inner diameter
Bearing	45.0 (1.772)	30.0 (1.181)
Race	45.0 (1.772)	28.0 (1.102)

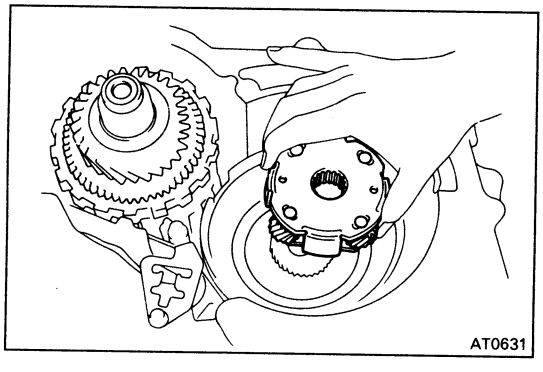

(b) Install the planetary gear.

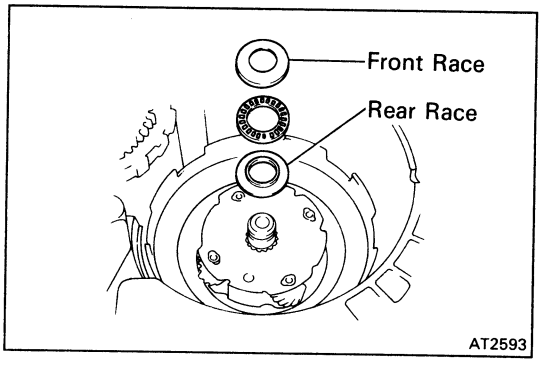

59. INSTALL FRONT PLANETARY RING GEAR

(a) Coat the races and bearing with petroleum jelly and install them onto the planetary ring gear.

Bearing and races: mm (in.)

	Outer diameter	Inner diameter
Front Race	37.9 (1.492)	22.0 (0.866)
Bearing	36.1 (1.421)	22.2 (0.874)
Rear Race	35.0 (1.378)	19.0 (0.748)

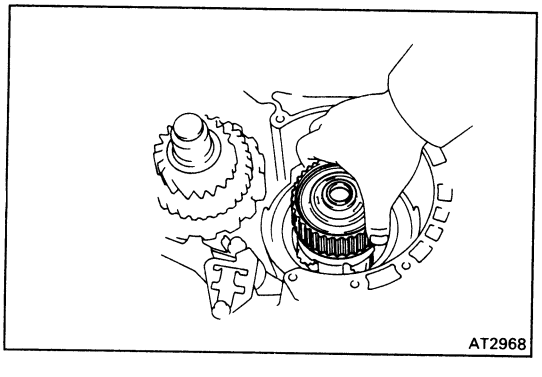

(b) Install the ring gear.

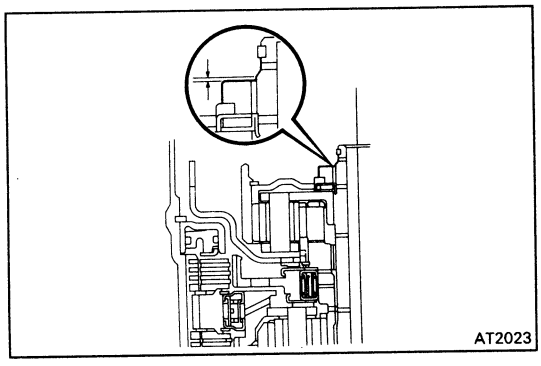

HINT: If the planetary ring gear and the other parts are installed correctly into the case, the end of the bushing with the ring gear flange will be flush with a shoulder of the intermediate shaft or under.

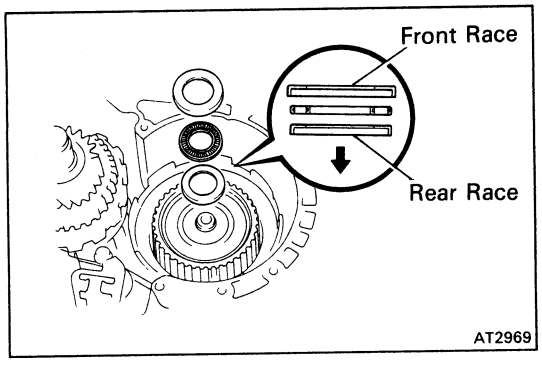

(c) Coat the races and bearing with petroleum jelly and install them onto the tip of ring gear flange as shown.

Bearing and races: mm (in.)

	Outer diameter	Inner diameter
Front Race	37.9 (1.492)	22.0 (0.866)
Bearing	36.1 (1.421)	22.2 (0.874)
Rear Race	35.7 (1.406)	23.0 (0.906)

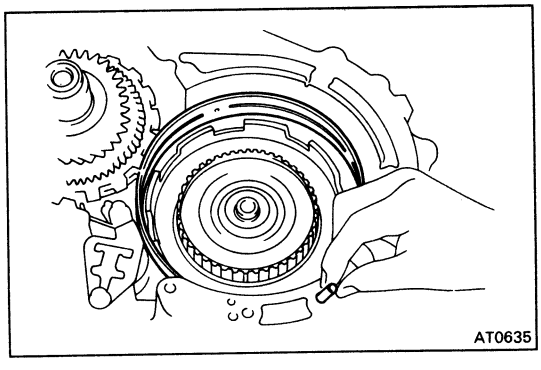

60. INSTALL SECOND COAST BRAKE BAND

(a) Place the band into the case.

(b) Install the pin through the oil pump mounting bolt hole.

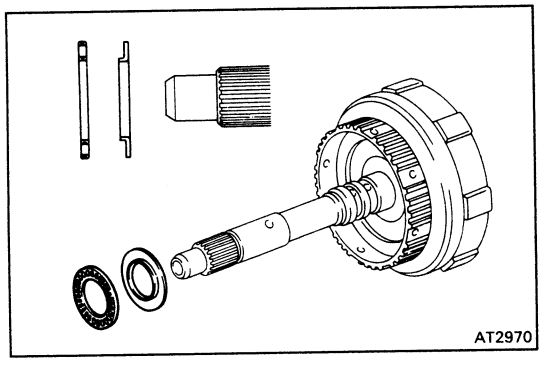

61. INSTALL FORWARD CLUTCH AND DIRECT CLUTCH

(a) Coat the race and bearing with petroleum jelly, and install them onto the forward clutch drum.

Bearing and race: mm (in.)

	Outer diameter	Inner diameter
Bearing	42.0 (1.654)	28.9 (1.138)
Race	42.0 (1.654)	27.1 (1.067)

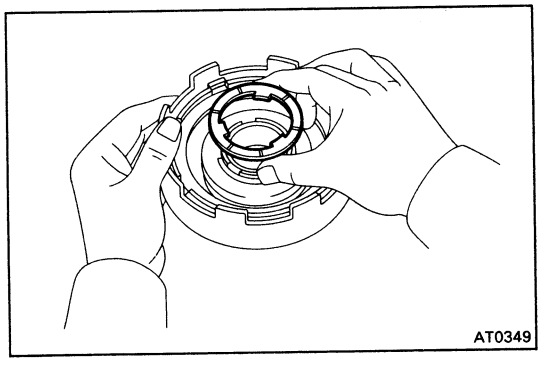

(b) Coat the clutch drum thrust washer with petroleum jelly, and install it onto the direct clutch drum with the oil groove facing upward.

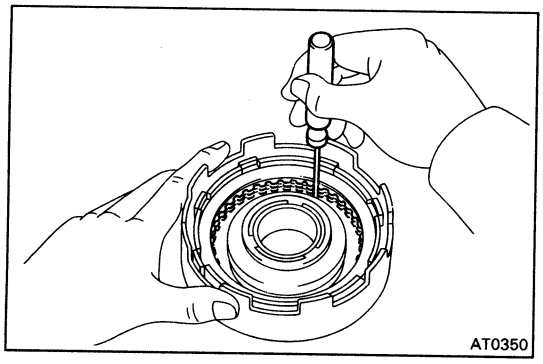

(c) Using a screwdriver, align the flukes of discs in the direct clutch.

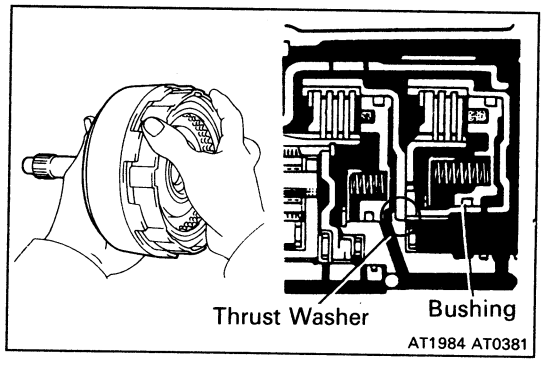

(d) Mesh the hub with the flukes of the direct clutch while turning the clutch drum or forward clutch.

HINT: If the flukes of the discs are meshed with the hub correctly, the end of the bushing with the direct clutch drum will be flush with the surfaces of the forward clutch.

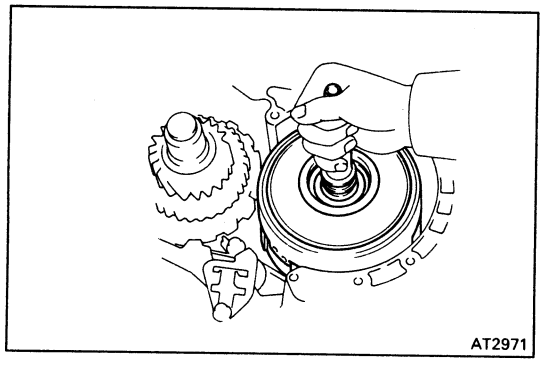

(e) Place the direct clutch and forward clutch into the case.

(f) While rotating the forward clutch to mesh the front planetary ring gear and discs, install them.

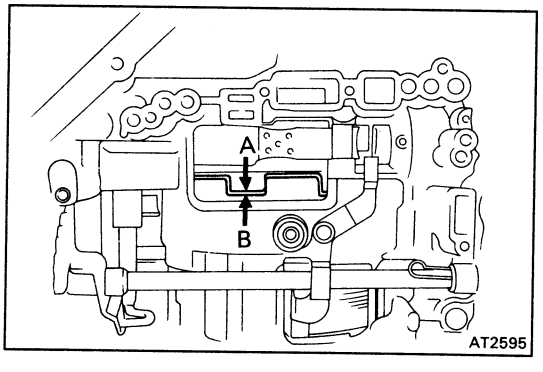

(g) Check the distance between A and B as shown in the illustration.

Distance: Approx. 3 mm (0.118 in.)

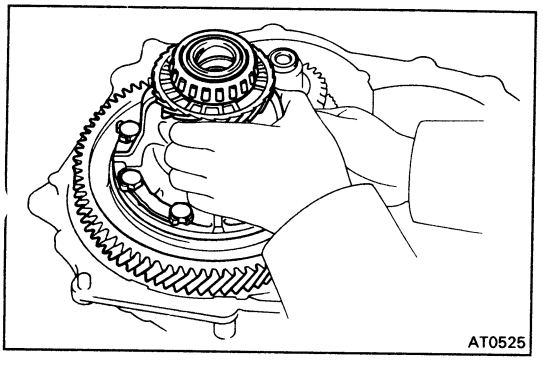

62. INSTALL DIFFERENTIAL

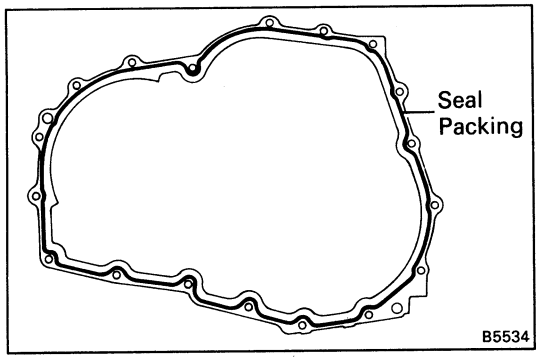

63. INSTALL TRANSAXLE HOUSING

(a) Remove any packing material and be careful not to get oil on the contacting surfaces of the transaxle housing or transmission case.

(b) Apply seal packing to the transaxle housing as shown.

Seal packing: Part No.08833-00090, THREE BOND 1131, LOCTITE 518 or equivalent.

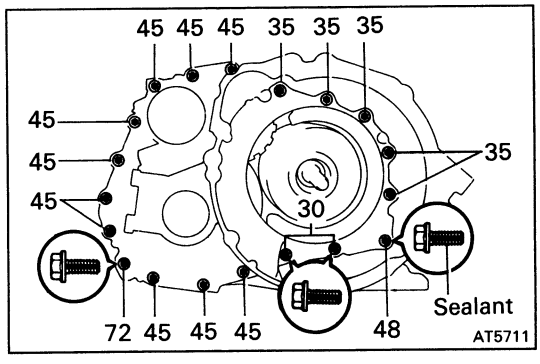

(c) Apply sealant to the bolt threads.

Sealant: Part No.08833-00080, adhesive 1344, THREE BOND 1344, LOCTITE 242 or equivalent

(d) Install and tighten the bolts.

Torque: 300 kg-cm (22 ft-lb, 29 N·m)

HINT: Each bolt length (mm) is indicated in the illustration.

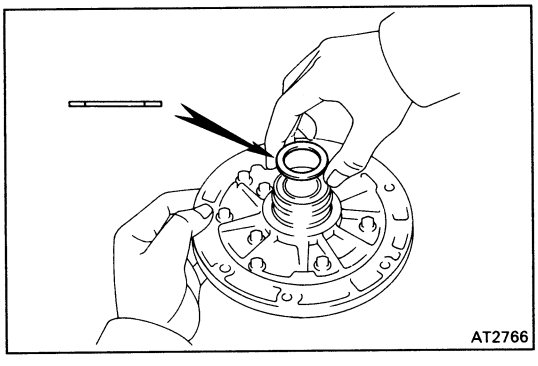

64. CHECK PRELOAD OF DIFFERENTIAL SIDE BEARING (See page AT-130)

65. INSTALL OIL PUMP INTO CASE

(a) Coat the race with petroleum jelly and install it onto the stator shaft.

Race: Outer diameter 43.0 mm (1.693 in.)
Inner diameter 30.5 mm (1.201 in.)

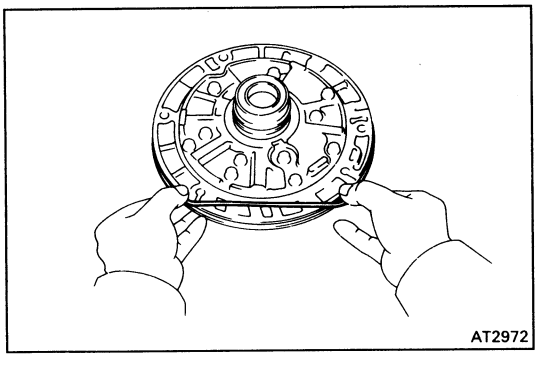

(b) Coat the new O-ring with ATF, and install it to pump body.

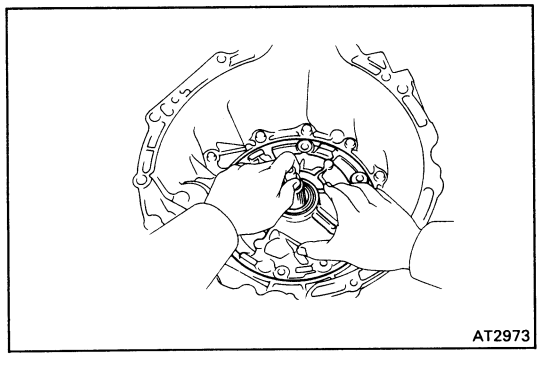

(c) Place the oil pump through the input shaft, and align the bolt holes of the pump body with the transmission case.

(d) Hold the input shaft, and lightly press the oil pump body to slide the oil seal rings on the stator shaft through the direct clutch drum.

NOTICE: Do not push on the oil pump strongly, or the oil seal ring will stick to the direct clutch drum.

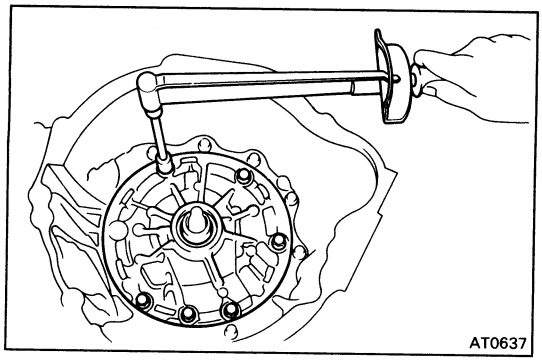

(e) Install and tighten the six bolts.

Torque: 250 kg-cm (18 ft-lb, 25 N·m)

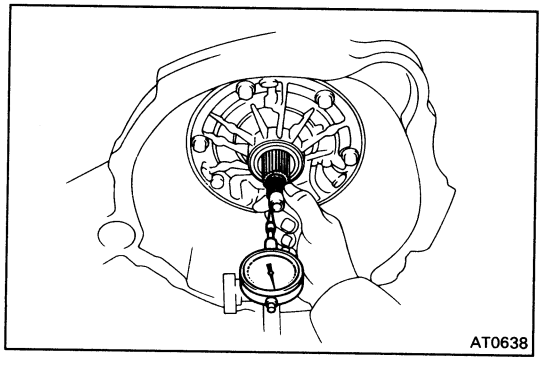

66. MEASURE THRUST PLAY OF INPUT SHAFT

Measure the thrust play in axial direction.

Thrust play: 0.3 – 0.9 mm (0.012 – 0.035 in.)

If the play is not as specified, select and replace the race for the end of the stator shaft.

HINT: There are two different thicknesses of races. If necessary, select one of them.

Race thickness: 0.8 mm (0.031 in.)
1.4 mm (0.055 in.)

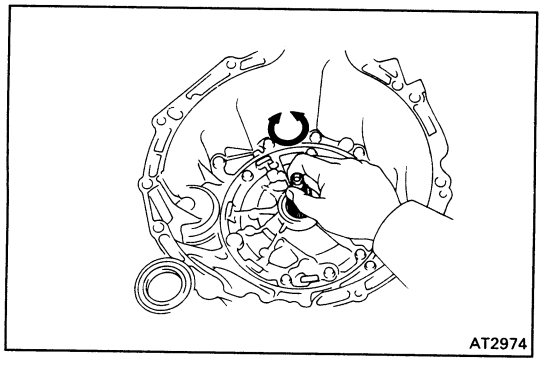

67. CHECK INPUT SHAFT ROTATION

Make sure that the input shaft rotates smoothly.

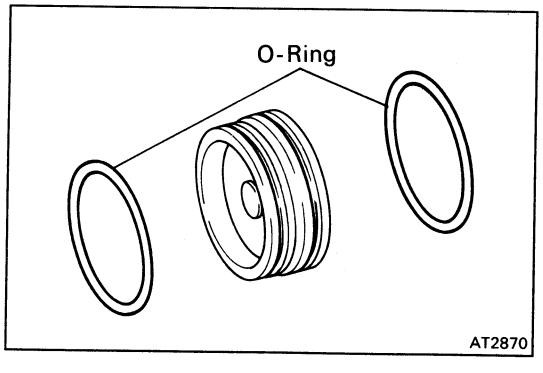

68. INSTALL SECOND COAST BRAKE PISTON

(a) Install the two new O-rings to the cover.

HINT: Coat the O-rings with ATF before installing.

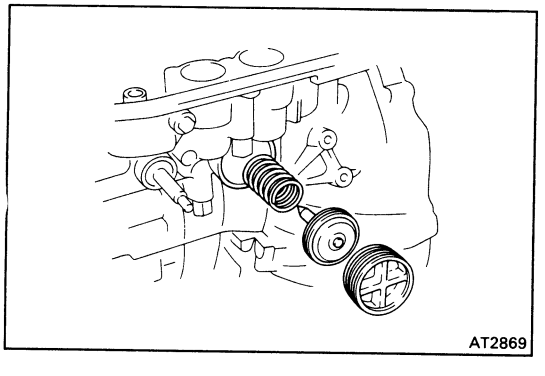

(b) Install the spring, piston and cover into the bore.

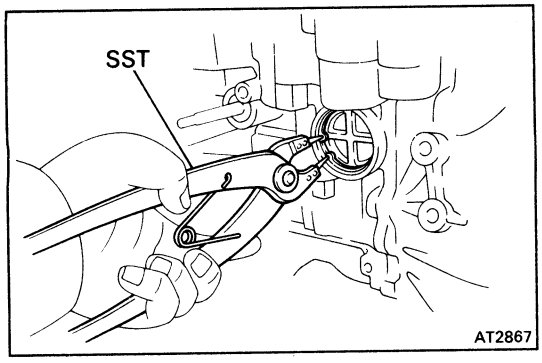

(c) Using SST, install the snap ring while pressing the cover.

SST 09350-32014 (09351-32050)

(d) Check that the front end of the piston rod contacts the center of the second brake band depression.

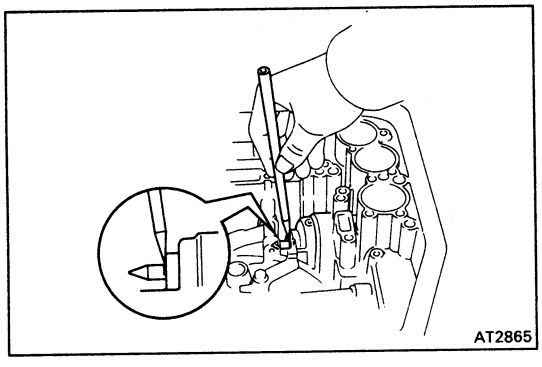

69. MEASURE PISTON STROKE OF SECOND COAST BRAKE

(a) Apply a small amount of paint to the piston rod at the point it meets the case as shown in the illustration.

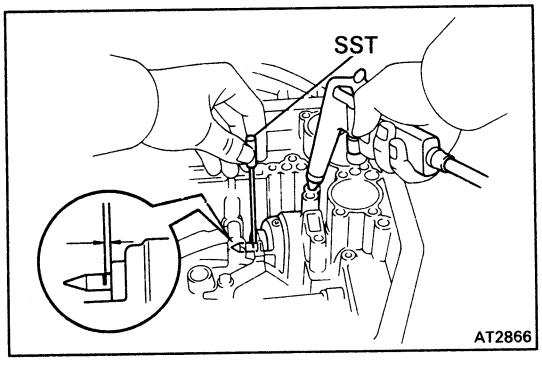

(b) Using SST, measure the piston stroke applying and releasing the compressed air (4 - 8 kg/cm^2, 57 - 114 psi, 392 - 785 kPa) as shown.

SST 09240-00020

Piston stroke: 1.5 – 3.0 mm (0.059 – 0.118 in.)

If it is still more than standard value, replace the brake band with a new one.

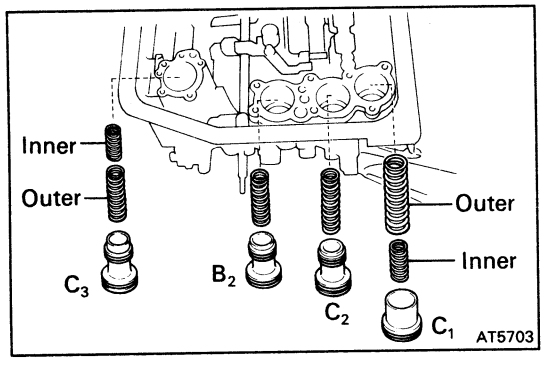

70. INSTALL ACCUMULATOR PISTONS AND SPRINGS

(a) Coat the new O-rings with ATF, and install them to the pistons.

(b) Install the pistons and springs to the case.

Spring		Free length mm (in.)	Color
C_1	Outer	74.1 (2.917)	Pink
	Inner	41.0 (1.614)	Pink
C_2		62.5 (2.461)	Pink
B_2		64.5 (2.539)	Green
C_3	Outer	65.2 (2.570)	Blue
	Inner	48.0 (1.890)	Orange

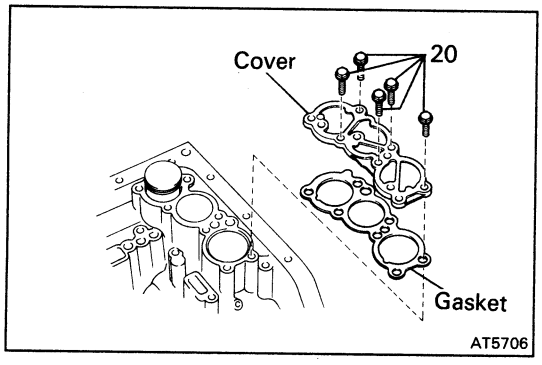

(c) Place the cover with a new gasket and gradually tighten the bolts a little a time in sequence.

HINT: Each bolt length (mm (in.)) is indicated in the figure.

Torque: 100 kg-cm (7 ft-lb, 10 N·m)

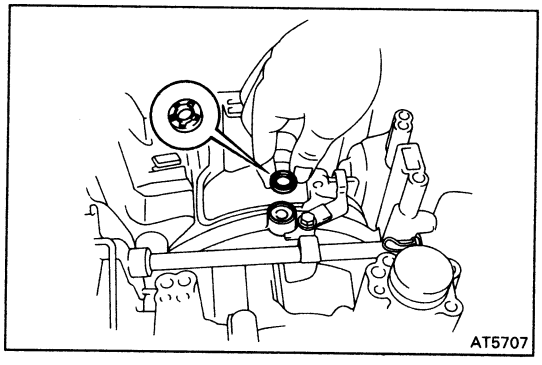

71. INSTALL NEW SECOND BRAKE APPLY GASKET

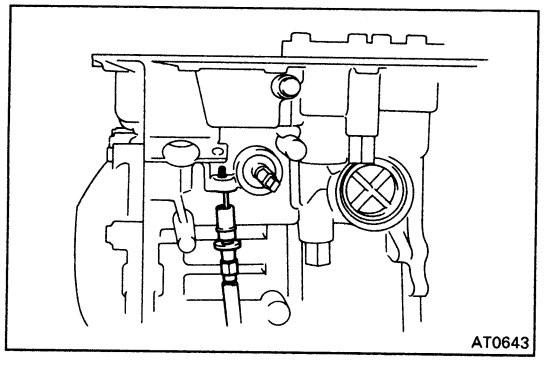

72. INSTALL THROTTLE CABLE IN CASE

Push the cable through the hole on the case, being careful not to damage the O-ring. Check for full seating.

NOTICE: In subsequent work, to avoid breaking the cable fitting do not roll the case over the cable.

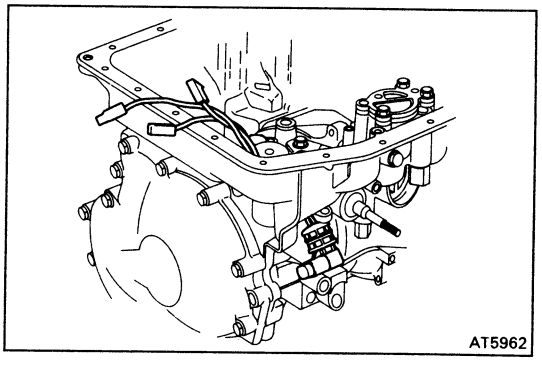

73. INSTALL SOLENOID WIRE

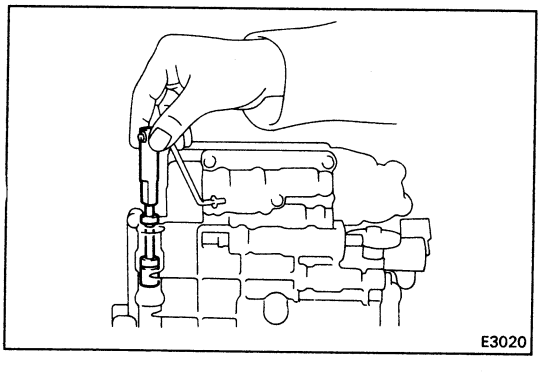

74. INSTALL VALVE BODY

(a) Coat the manual valve with ATF and install it to the valve body.

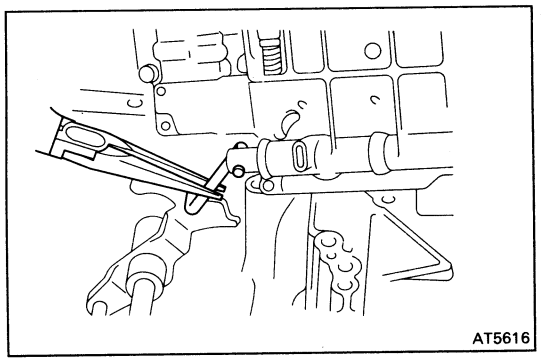

(b) Connect the connecting rod to the manual valve lever.

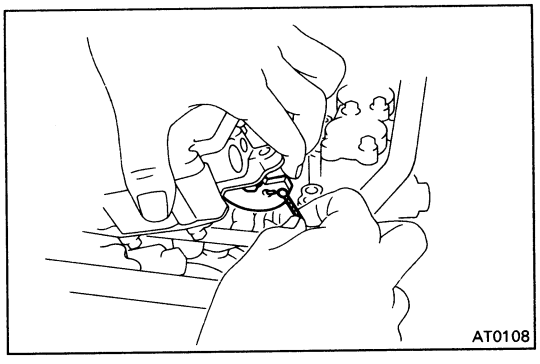

(c) Place the valve body on the transmission.

(d) While holding the cam down with your hand, slip the cable end into the slot.

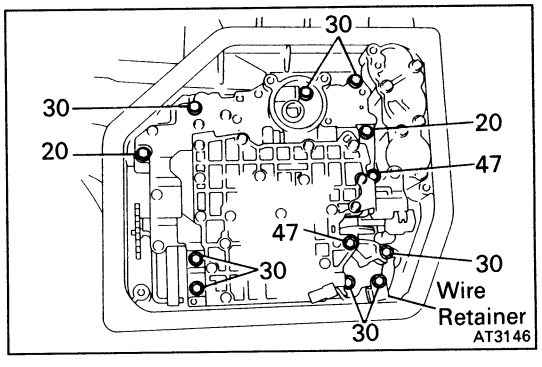

(e) Install the twelve bolts and wire retainer shown in the illustration, and hand tighten all the bolts first. Then tighten them with a torque wrench.

HINT: Each bolt length (mm) is indicated in the illustration.

Torque: 100 kg-cm (7 ft-lb, 10 N·m)

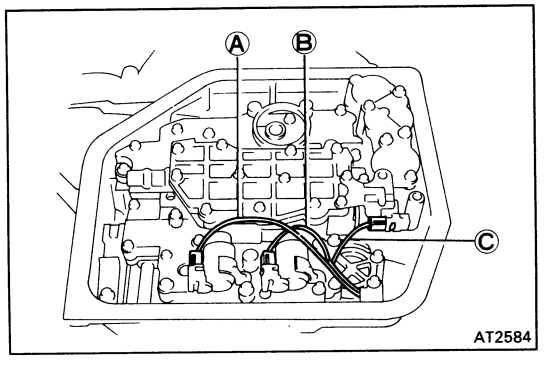

75. CONNECT SOLENOID CONNECTOR

HINT: Wire color

Ⓐ White

Ⓑ Black

Ⓒ Yellow

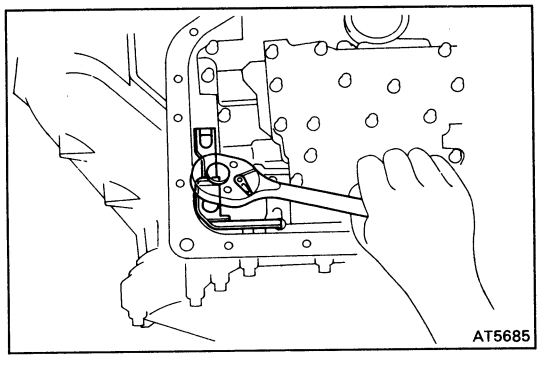

76. INSTALL MANUAL DETENT SPRING

(a) Install the detent spring and cover in place, and install the bolt (length: 16mm).

(b) Hand tighten the bolt first, then tighten the bolt with a torque wrench.

Torque: 100 kg-cm (7 ft-lb, 10 N·m)

(c) Check that the manual valve lever is in contact with the center of the roller at the tip of the detent spring.

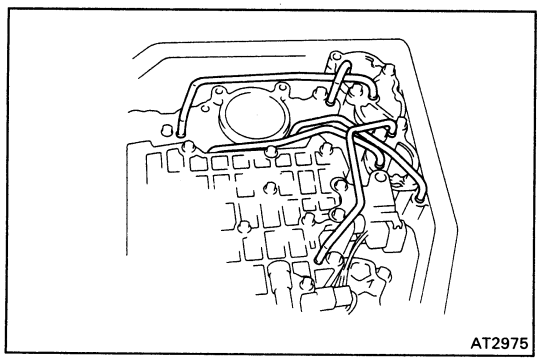

77. INSTALL OIL TUBES

(a) Tap the tubes with a plastic hammer to install them into the positions indicated in the illustration.

NOTICE: Be careful not to bend or damaged the tubes.

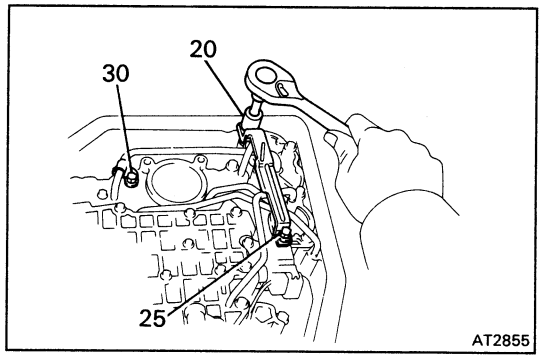

(b) Install the oil tube clamp and bracket.

HINT: Each bolt length (mm) is indicated in the illustration. Hand tighten all bolts first, then tighten them with a torque wrench.

Torque: 100 kg-cm (7 ft-lb, 10 N·m)

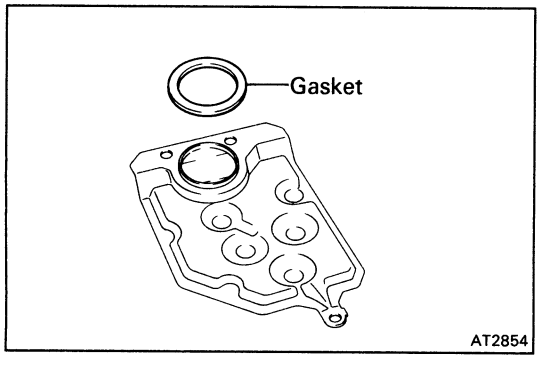

78. INSTALL OIL STRAINER

(a) Install the new gasket to the oil strainer.

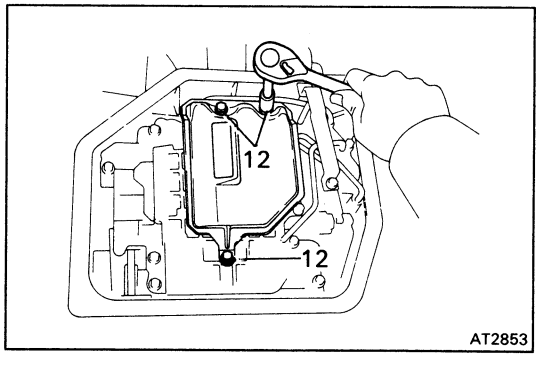

(b) Install the oil strainer with the three bolts.

HINT: Each bolt length (mm) is indicated in the illustration.

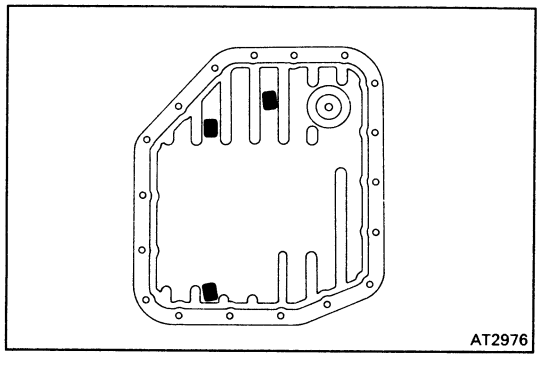

79. INSTALL THREE MAGNETS IN OIL PAN

NOTICE: Make sure that the magnets do not interfere with the oil tubes.

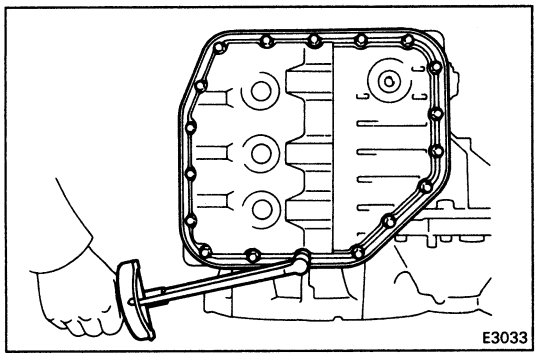

80. INSTALL OIL PAN

(a) Install a new gasket to the oil pan and install them to the transmission.

(b) Tighten the eighteen bolts.

Torque: 50 kg-cm (43 in.-lb, 4.9 N·m)

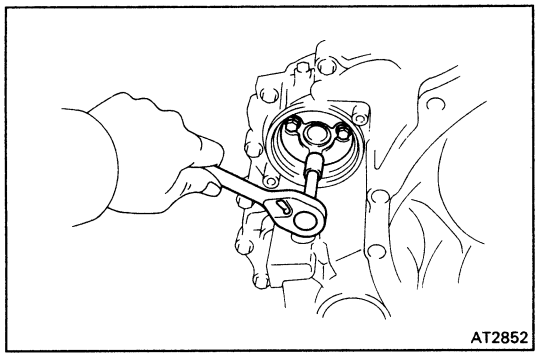

81. INSTALL SPEED SENSOR AND SENSOR ROTOR

(a) Install the sensor adaptor with three bolts.

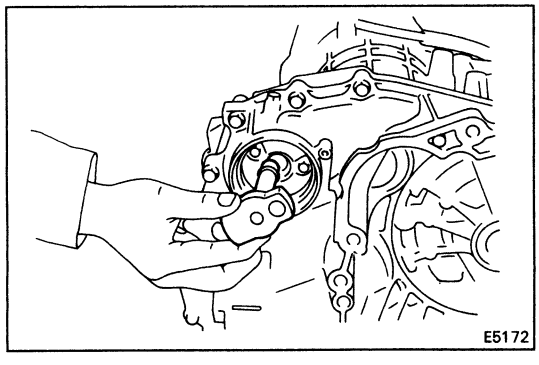

(b) Install the sensor rotor.

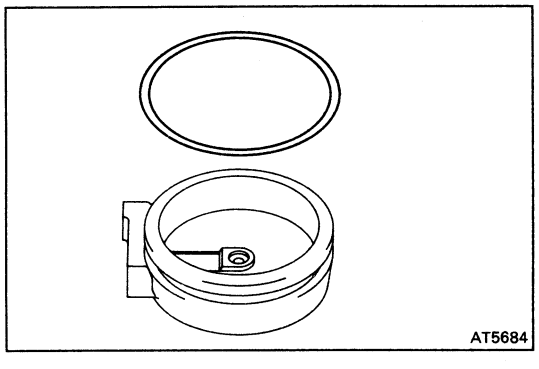

(c) Install a new O-ring to the sensor cover.

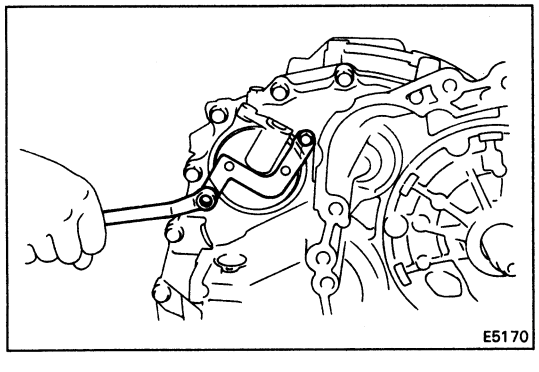

(d) Install the sensor cover to the transmission and then install the sensor cover bracket with the two bolts.

Torque: 130 kg-cm (9 ft-lb, 13 N·m)

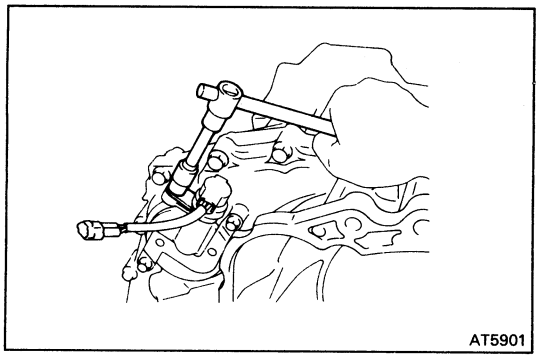

(e) Coat a new O-ring with ATF and install it to the speed sensor.

(f) Install the speed sensor and retaining plate.

Torque: 100 kg-cm (7 ft-lb, 10 N·m)

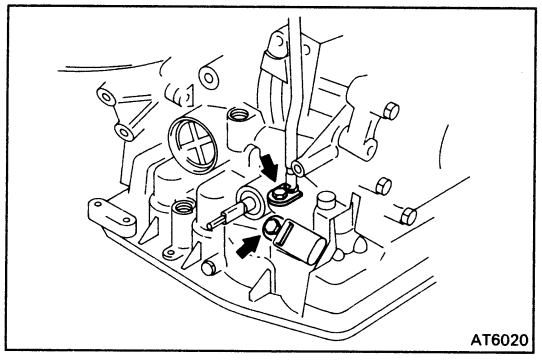

82. INSTALL SOLENOID WIRE RETAINING PLATE

83. INSTALL THROTTLE CABLE RETAINING PLATE

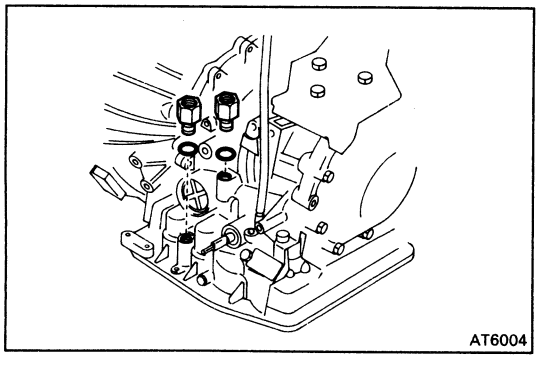

84. INSTALL UNION

(a) Install the new O-rings to the union.

(b) Install the union to the transaxle case.

Torque: 275 kg-cm (20 ft-lb, 27 N·m)

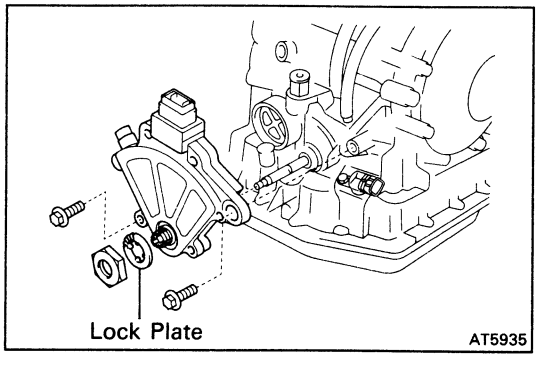

85. INSTALL NEUTRAL START SWITCH

(a) Install the neutral start switch to the manual valve shaft.

(b) Place the new locking plate and tighten the nut.

Torque: 70 kg-cm (61 in.-lb, 6.9 N·m)

(c) Stake the nut with locking plate.

(d) Install the two bolts.

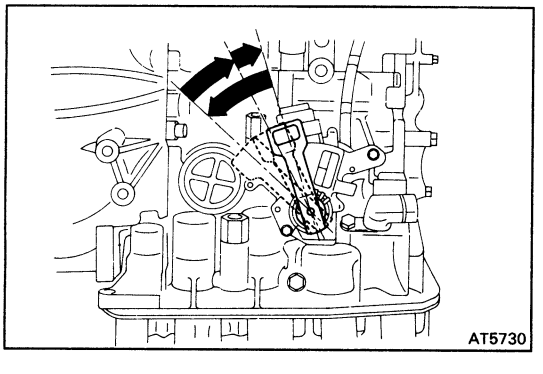

(e) Temporarily install the manual shift lever.

(f) Turn the lever counterclockwise until it stops, then turn it clockwise two notches.

(g) Remove the manual shift lever.

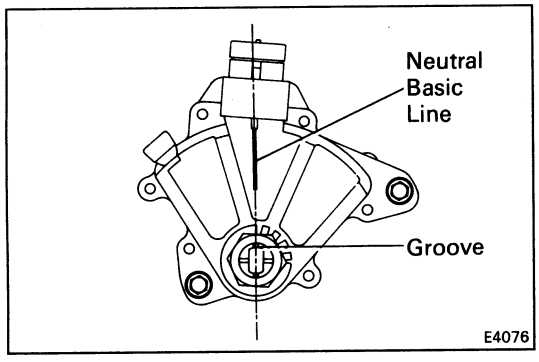

(h) Align the groove and neutral basic line as shown.

(i) Install and tighten the two bolts.

Torque: 55 kg-cm (48 in.-lb, 5.4 N·m)

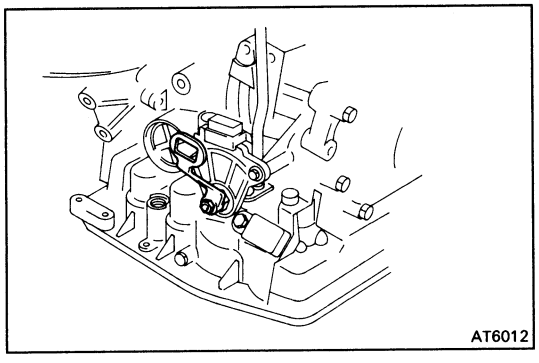

86. INSTALL MANUAL SHIFT LEVER

87. INSTALL FILLER TUBE AND TRANSMISSION DIPSTICK

88. INSTALL TWO OIL COOLER PIPES

SHIFT LOCK SYSTEM

COMPONENT AND CIRCUIT

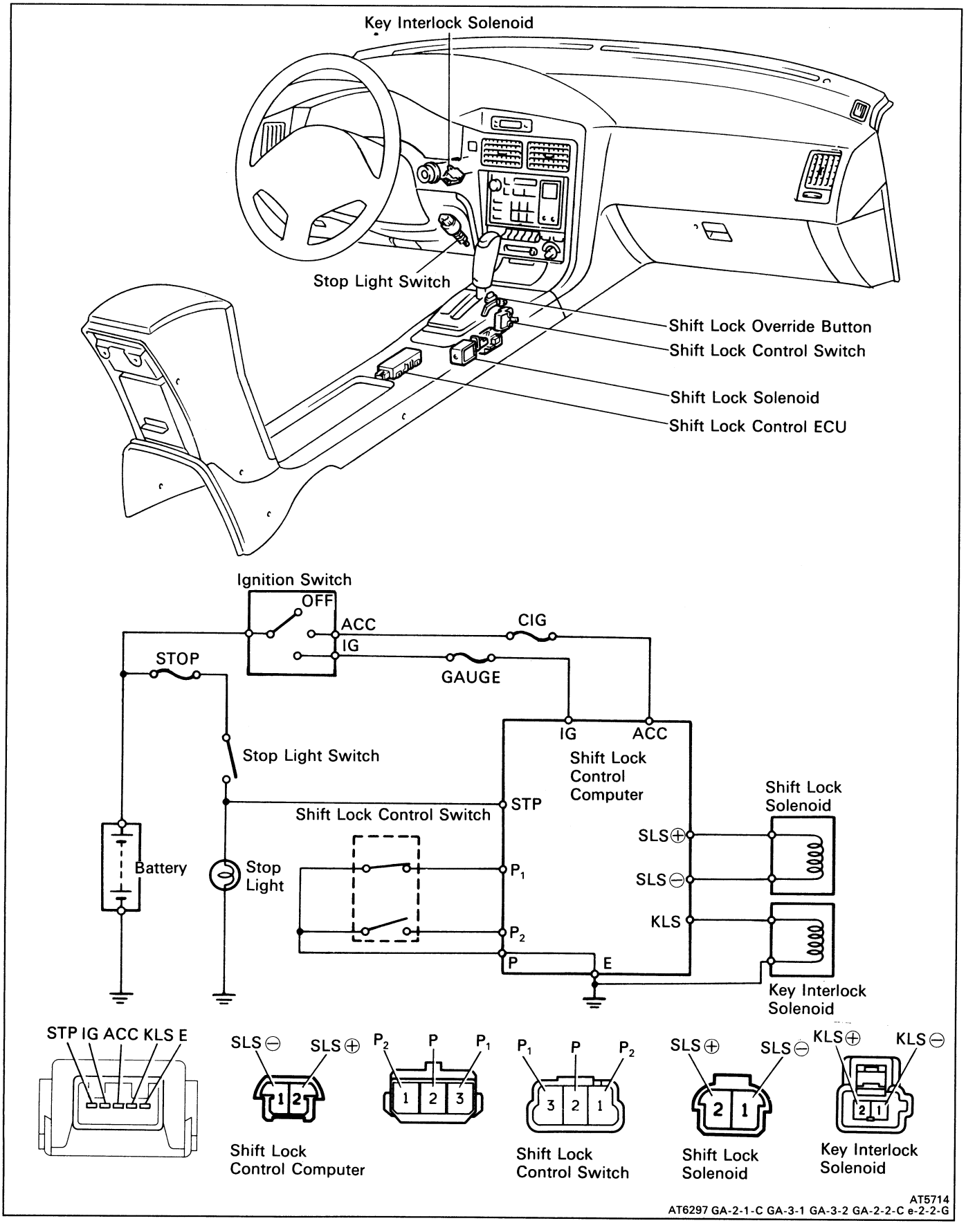

AT5714
AT6297 GA-2-1-C GA-3-1 GA-3-2 GA-2-2-C e-2-2-G

INSPECTION OF ELECTRIC CONTROL COMPONENTS

1. INSPECT SHIFT LOCK CONTROL ECU

Do not disconnect the ECU connector.
Measure the voltage and continuity between terminals.

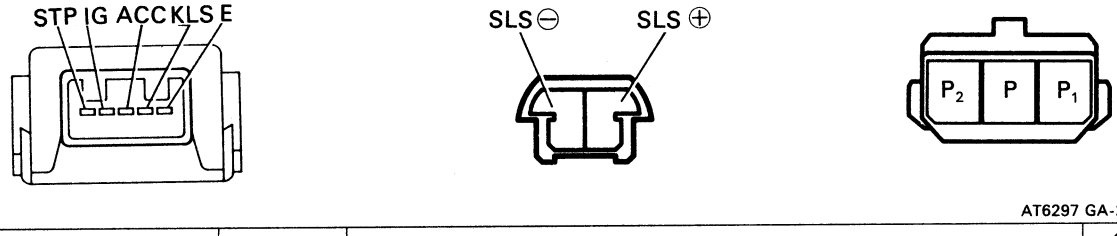

AT6297 GA-2-1-1-C GA-3-1

Connector	Terminal	Measured Item	Measuring Condition	Specified Value
A	ACC – E	Voltage	Ignition switch ACC position	10 – 14 V
	IG – E	Voltage	Ignition switch ON position	10 – 14 V
	KLS – E	Voltage	① Ignition switch ACC position and "P" range	0 V
			② Ignition switch ACC position and other than "P" range	7.5 – 11.5 V
			③ ② and approx-after one second	6 – 9 V
	E – Ground	Continuity	All conditions	Continuity
	STP – E	Voltage	Release brake pedal	0 V
			Depress brake pedal	10 – 14 V
B	SLS⊖ – E	Continuity	All conditions	Continuity
	SLS⊕ – E	Voltage	① Ignition switch ON position and "P" range	0 V
			② ① and depress brake pedal	8.5 – 13.5 V
			③ ② and release brake pedal or ② and shift to range other than "P" range	0 V
C	P_2 – E	Voltage	① Ignition switch ACC position and "P" range	0 – 13.5 V
			② ① and push the shift lever knob, or Ignition switch ACC position and shift to range other than "P" range.	0 V
	P – E	Continuity	All conditions	Continuity
	P_1 – E	Voltage	Ignition switch ON position, "P" range and brake pedal depressed.	0 V
			Ignition switch ON position brake pedal depressed and shift to range other than "P" range	9 – 13.5 V

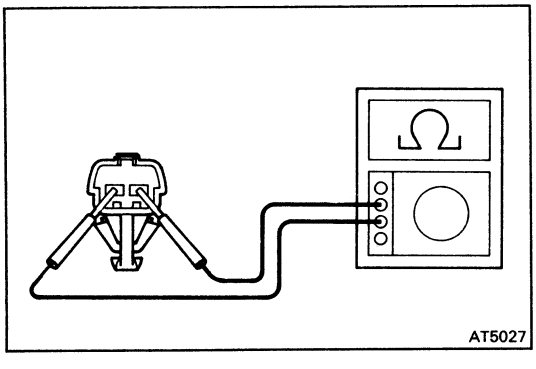

2. INSPECT SHIFT LOCK SOLENOID

(a) Disconnect the solenoid connector.

(b) Using an ohmmeter, measure the resistance between terminals.

Standard resistance: 21 – 27 Ω

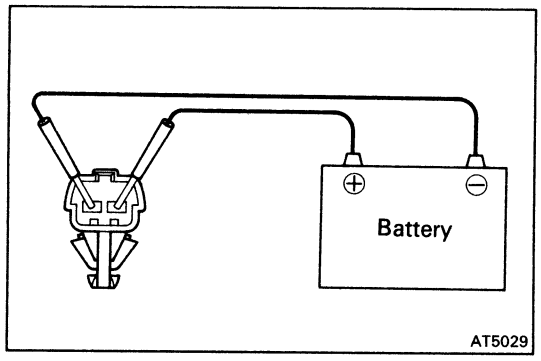

(c) Apply battery voltage between terminals. Check that an operation noise can be heard from the solenoid.

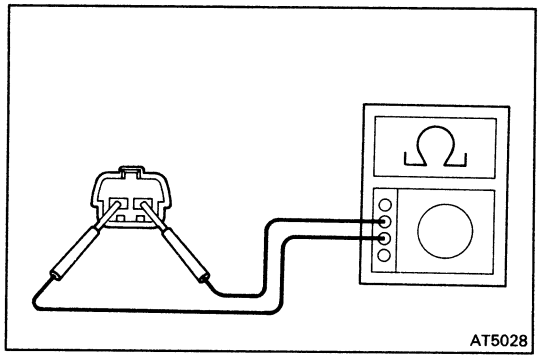

3. INSPECT KEY INTERLOCK SOLENOID

(a) Disconnect the solenoid connector.

(b) Using an ohmmeter, measure the resistance between terminals.

Standard resistance: 12.5 – 16.5 Ω

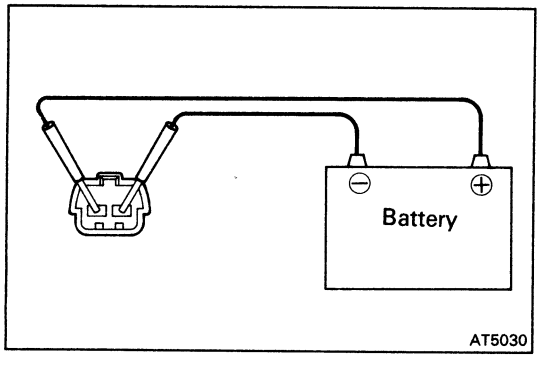

(c) Apply the battery voltage between terminals. Check that an operation noise can be heard from the solenoid.

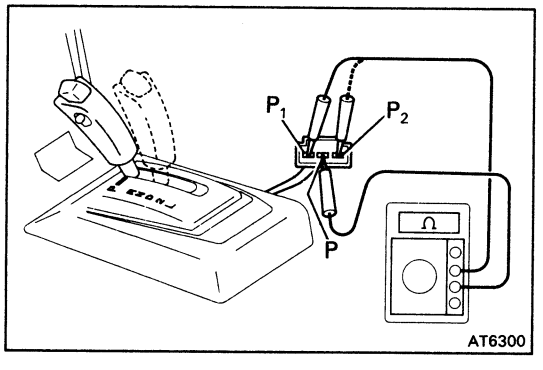

4. INSPECT SHIFT LOCK CONTROL SWITCH

Check whether there is continuity between each terminals.

O—O : Continuity

Shift Position \ Terminal	P	P_1	P_2
P range (Release button is not pushed)	O—O		
P Range (Release button is pushed)	O—O O		O
R, N, D, 2, L range	O		O

SUSPENSION AND AXLE

	Page
TROUBLESHOOTING	SA-2
WHEEL ALIGNMENT	SA-3
Front Wheel Alignment	SA-4
Rear Wheel Alignment	SA-6
FRONT AXLE HUB	SA-9
FRONT SUSPENSION	
Front Shock Absorber	SA-18
Ball Joints, Lower Arm and Stabilizer Bar	SA-24
REAR AXLE SHAFT AND CARRIER	SA-31
REAR DRIVE SHAFT (5S-FE ENGINE)	SA-39
REAR DRIVE SHAFT (3S-GTE ENGINE)	SA-52
REAR SUSPENSION	
Rear Shock Absorber	SA-69
Ball Joint, Lower Arm and Stabilizer Bar	SA-75
Engine Lateral Control Rod	SA-86

TROUBLESHOOTING

Problem	Possible cause	Remedy	Page	
			Front	Rear
Wanders/pulls	Tires worn or improperly inflated	Replace tire or inflate tires to proper pressure	SA-3	SA-3
	Wheel alignment incorrect	Check wheel alignment	SA-4	SA-6
	Hub bearing worn	Replace hub bearing	SA-9	SA-31
	Front of rear suspension parts loose or broken	Tighten or replace suspension parts	SA-18	SA-69
	Steering gear out of adjustment or broken	Adjust or repair steering gear	SR-22	–
Bottoming	Vehicle overloaded	Check loading		
	Shock absorber worn out	Replace shock absorber	SA-18	SA-69
	Spring weak	Replace spring	SA-18	SA-69
Sways/pitches	Tires improperly inflated	Inflate tires to proper pressure	SA-3	SA-3
	Stabilizer bar bent or broken	Inspect stabilizer bar	SA-24	SA-69
	Shock absorber worn out	Replace shock absorber	SA-18	SA-69
Front wheel shimmy	Tires worn or improperly inflated	Replace tire or inflate tires to proper pressure	SA-3	–
	Wheels out of balance	Balance wheels		
	Shock absorber worn out	Replace shock absorber	SA-18	–
	Wheel alignment incorrect	Check front wheel alignment	SA-4	–
	Hub bearings worn	Replace hub bearings	SA-9	–
	Ball joints or bushings worn	Inspect ball joints and bushings	SA-24	–
	Steering gear out of adjustment or broken	Adjust or repair steering gear	SR-22	–
Abnormal tire wear	Tires improperly inflated	Inflate tires to proper pressure	SA-3	SA-3
	Shock absorber worn out	Replace shock absorber	SA-18	SA-69
	Wheel alignment incorrect	Check wheel alignment	SA-4	SA-6
	Suspension parts worn	Replace suspension parts	SA-18	SA-69

WHEEL ALIGNMENT

1. MAKE FOLLOWING CHECKS AND CORRECT ANY PROBLEMS

(a) Check the tires for wear, size and proper inflation pressure.

Cold tire inflation pressure:

kg/cm² (psi, kPa)

Engine type	Tire size	Tire pressure
5S-FE Engine	195/60HR14(Front)	2.0 (29, 200)
	205/60HR14(Rear)	2.3 (33, 225)
3S-GTE Engine	195/60VR14(Front)	2.0 (29, 200)
	205/60VR14(Rear)	2.3 (33, 225)

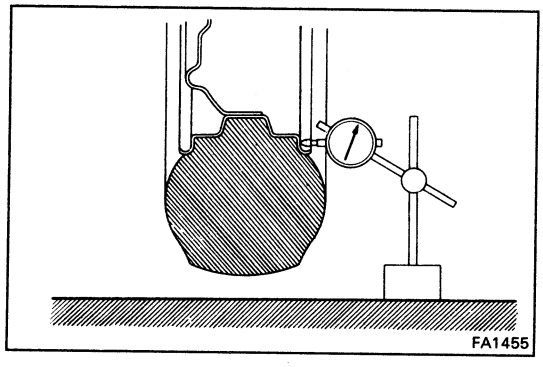
FA1455

(b) Check the wheel runout.

Lateral runout: Less than 1.0 mm (0.039 in.)

(c) Check the front wheel bearings for looseness.

(d) Check the front suspension for looseness.

(e) Check the steering linkage for looseness.

(f) Check the ball joint for excessive looseness.

(g) Check that the front shock absorber work properly by using the standard bounce test.

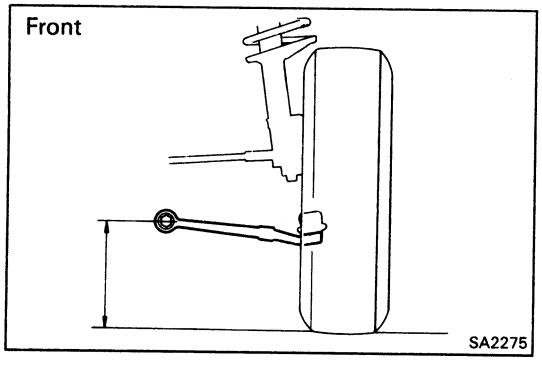

SA2275

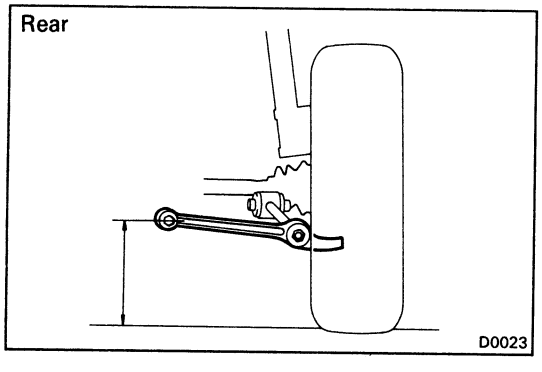

D0023

2. MEASURE VEHICLE HEIGHT

Vehicle height:

Front 224 mm (8.82 in.)
Rear 203 mm (7.99 in.)

HINT:

- Measuring point

  Front – Measure from the ground to the center of the lower suspension arm mounting bolt.

  Rear – Measure from the ground to the center of the body side Rear suspension No.1 mounting bolt.

- Before inspecting the wheel alignment, adjust the chassis ground clearance to specification.

If the clearance of the vehicle is not standard, try to adjust it by pushing down in the body or by lifting the body. If still not correct, check for bad springs or suspension parts.

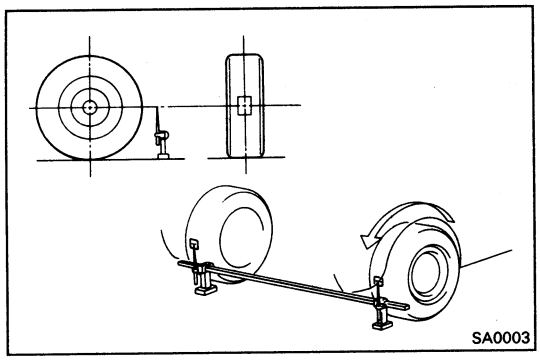
SA0003

Front Wheel Alignment

1. INSPECT TOE-IN

Measure toe-in with a toe-in gauge in the following procedure.

(a) Bounce the vehicle up and down to stabilize the suspension.

(b) Move the vehicle forward about 5 m (16.4 ft) with the front wheel in the straight-ahead position on a level place.

(c) Mark the center of each rear tread and measure the distance between the marks of the right and left tires.

(d) Advance the vehicle until the marks on the rear sides of the tires come to the measuring heights of the gauge on the front side.

HINT: If the tire rolls too far, repeat from step (b).

(e) Measure the distance between the marks on the front of the tires.

Inspection standard: 1 ± 2 mm (0.04 ± 0.08 in.)

If toe-in is not within specification, adjust by the tie rod end.

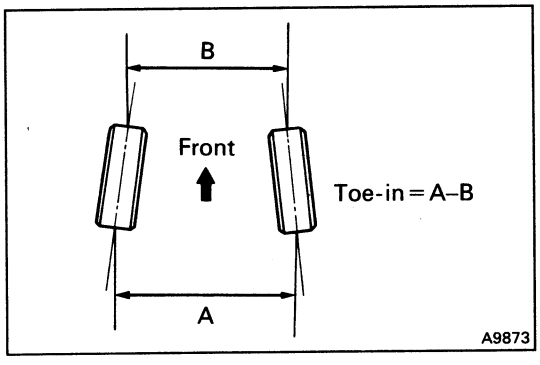

A9873

2. ADJUST TOE-IN

(a) Remove the boot clips.

(b) Loosen tie rod end lock nut.

(c) Turn the left and right tie rod ends an equal amount to adjust the toe-in.

Adjustment standard: 1 ± 1 mm (0.04 ± 0.04 in.)

HINT: Insure that the lengths of the left and right tie rod ends are the same.

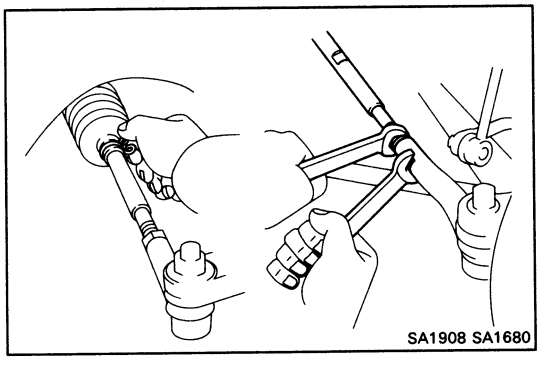
SA1908 SA1680

Tie rod end length left-right error:
1.0 mm (0.039 in.) or less

(d) Torque the tie rod end lock nuts.

Torque: 480 kg-cm (35 ft-lb, 47 N·m)

(e) Place the boot on the seat and clamp it.

HINT: Insure that the boots are not twisted.

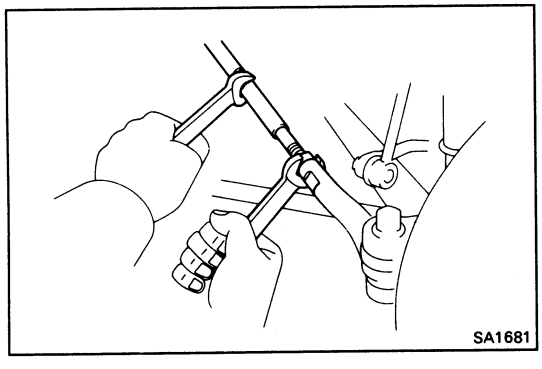
SA1681

3. CHECK WHEEL ANGLE

Wheel Angle (Maximum):

Inside wheel	**37°30′ ± 1°30′**
Outside wheel	**32°**

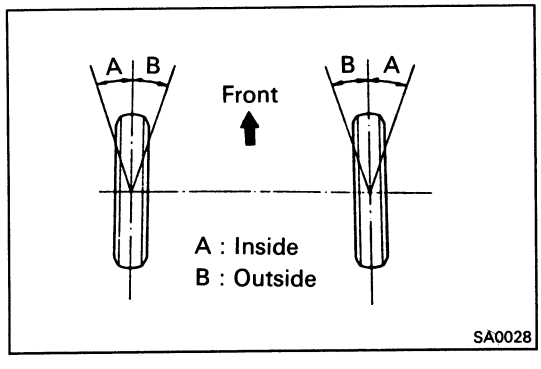

SA0028

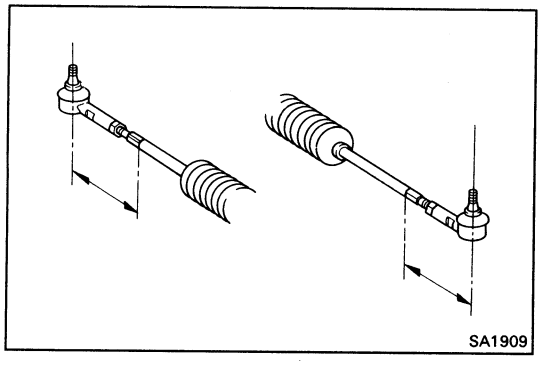

If wheel angles differ from the standard specifications, check to see of the lengths of the left and right tie rods are the same.

HINT: If the rod lengths are not equal, the wheel angle cannot be adjusted properly.

If the tie rod lengths were changed to adjust the wheel angle, inspect the toe-in.

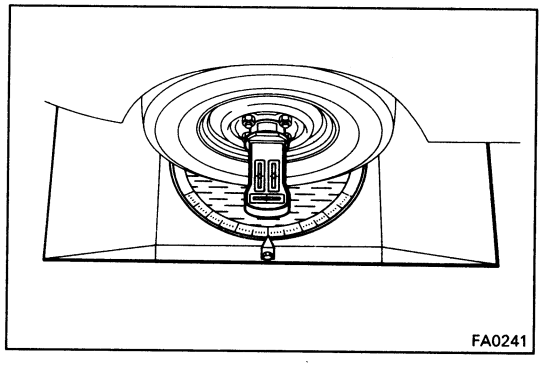

4. INSTALL WHEEL ALIGNMENT EQUIPMENT

Follow the specific instructions of the equipment manufacturer.

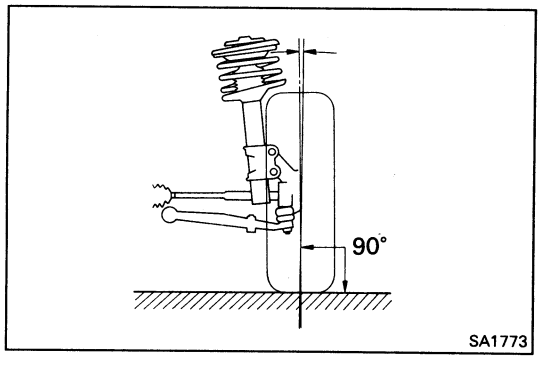

5. CHECK CAMBER

Camber:

Inspection standard	**–0°55′ ± 30′**
Left-right error	**30° or less**

HINT: Camber is not adjustable, of measurement is not within specification, inspect and replace the suspension parts as necessary.

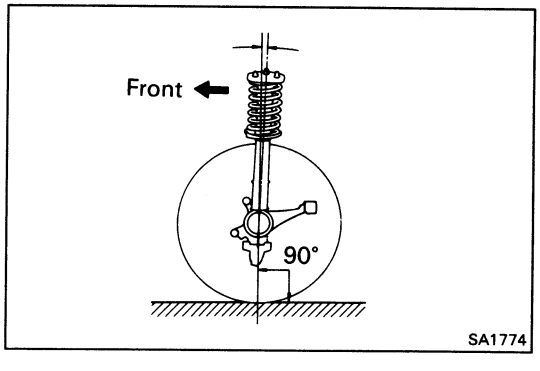

6. CHECK CASTER

Caster:

Inspection standard	**2°45′ ± 45′**
Adjustment standard	**2°45′ ± 30′**
Left-right error	**30′ or less**

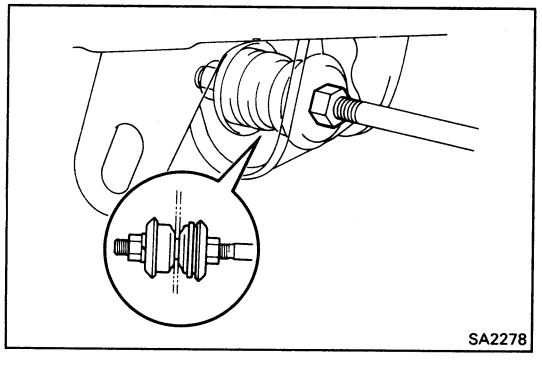

If caster is not within specification, adjust by turning the nut.

(a) Loosen the strut bar front nut.

(b) Turn the camber adjusting nut to adjust.

HINT: Each revolution of the nut alters the caster angle by 14′.

(c) Tighten the strut bar front nut.

Torque: 1,150 kg-cm (83 ft-lb, 113 N·m)

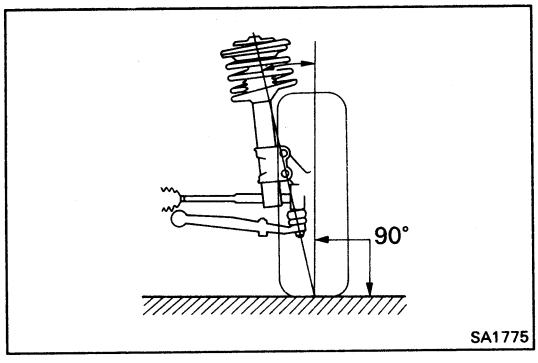

7. CHECK STEERING AXIS INCLINATION

Steering axis inclination:

Inspection standard	**13°30′ ± 30′**
Left-right error	**30′ or less**

HINT: Steering axis inclination is not adjustable, if measurement is not within specification, inspect and replace the suspension parts as necessary.

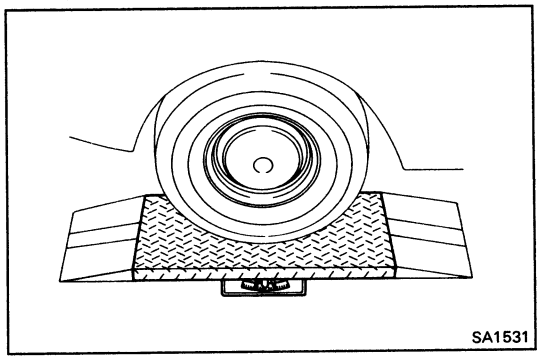

8. CHECK SIDE SLIP (REFERENCE ONLY)

Side slip: 3.0 mm/m (0.118 in./3.3 ft) or less

Rear Wheel Alignment

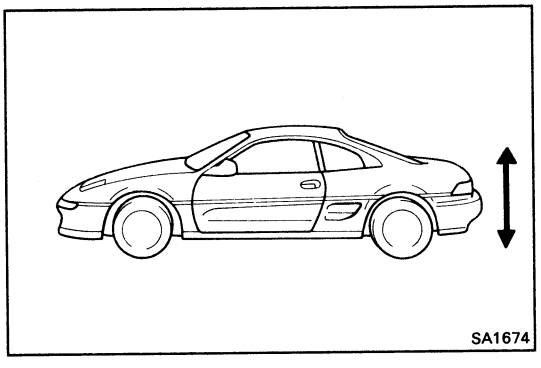

1. INSPECT TOE-IN

Adjust toe-in with a toe-in gauge in the following procedure.

(a) Bounce the vehicle up and down to stabilize the suspension.

(b) Move the vehicle forward about 5 m (16.4 ft) with the front wheels in the straight-ahead position on a level place.

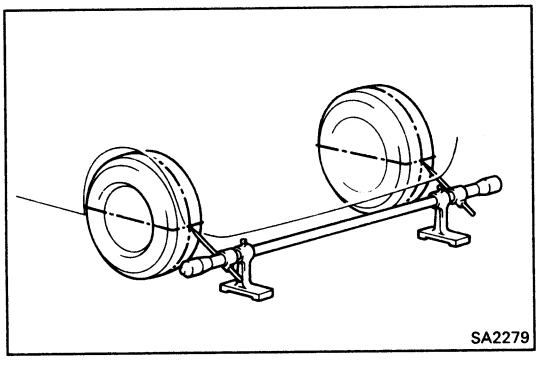

(c) Mark the center of each rear tread and measure the distance between the marks of the right and left tires.

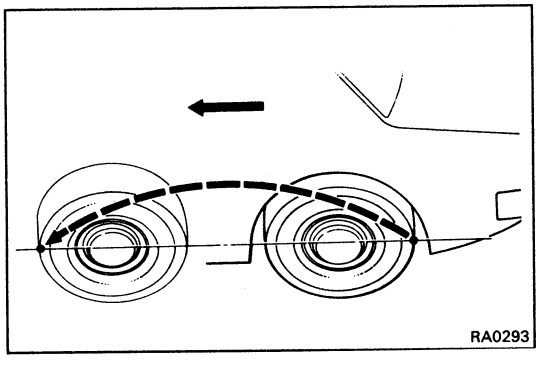

(d) Advance the vehicle until the marks on the rear sides of the tires come to the measuring heights of the gauge on the front side.

HINT: If the tire rolls too far, repeat from step (b).

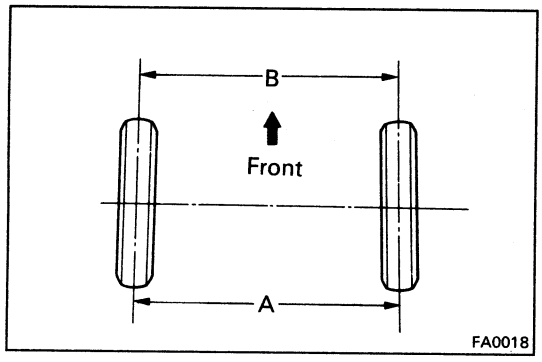

(e) Measure the distance between the marks on the front side of the tires.

Toe-in:

Inspection STD 5 ± 1 mm (0.20 ± 0.04 in.)

If not within specification, inspect and replace any damaged or worn rear suspension parts.

HINT: After replacing damaged or worn suspension parts, measure the toe-in following (b), (c), (d) and (e) above. If toe-in is still not within standard, adjust the toe-in.

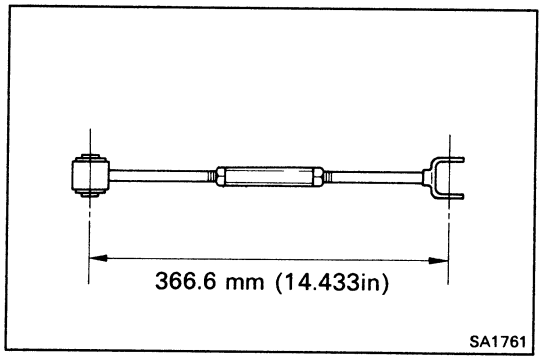

2. ADJUST TOE-IN

(a) Measure the lengths of the left and right suspension arms to see of the length are equal.

If not equal, adjust following the procedures below.

- If the toe-in is less than standard, adjust the length of the shorter arm by the tie rod tube.
- If the toe-in is greater than standard, adjust the length of the longer arm by the tie rod tube.

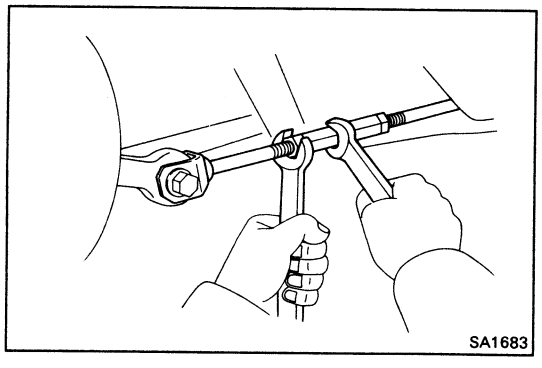

(b) Loosen the nuts.

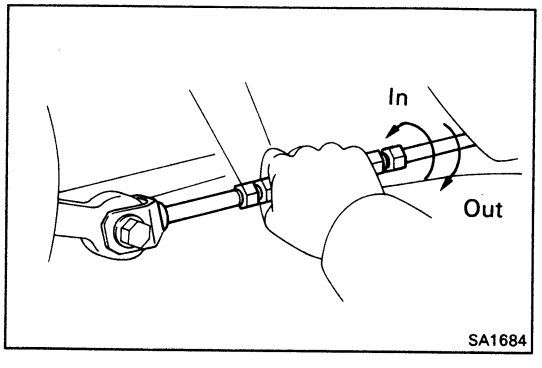

(c) Turn the left and right tie rod tubes and equal amount.

Toe-in:

Adjustment STD 5 ± 1 mm (0.20 ± 0.04 in.)

(d) Tighten the nuts.

(e) After toe-in adjustment.

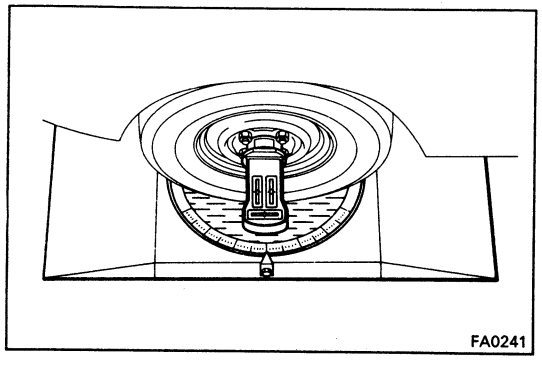

3. INSTALL WHEEL ALIGNMENT EQUIPMENT

Follow the specific instructions of the equipment manufacturer.

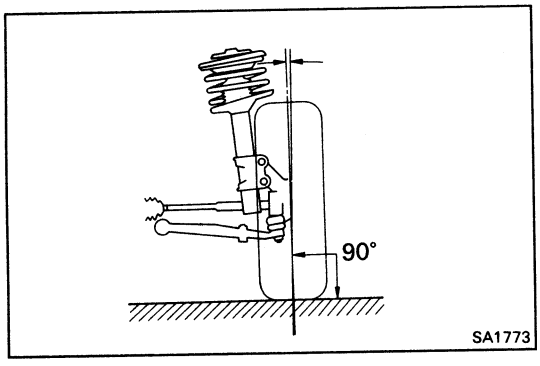

4. CHECK CAMBER

Camber:

Inspection standard	**–1°20′ ± 30′**
Left-right error	**30′ or less**

HINT: Camber is not adjustable, if measurement is not within specification, inspect and replace the suspension parts as necessary.

FRONT AXLE HUB

COMPONENTS

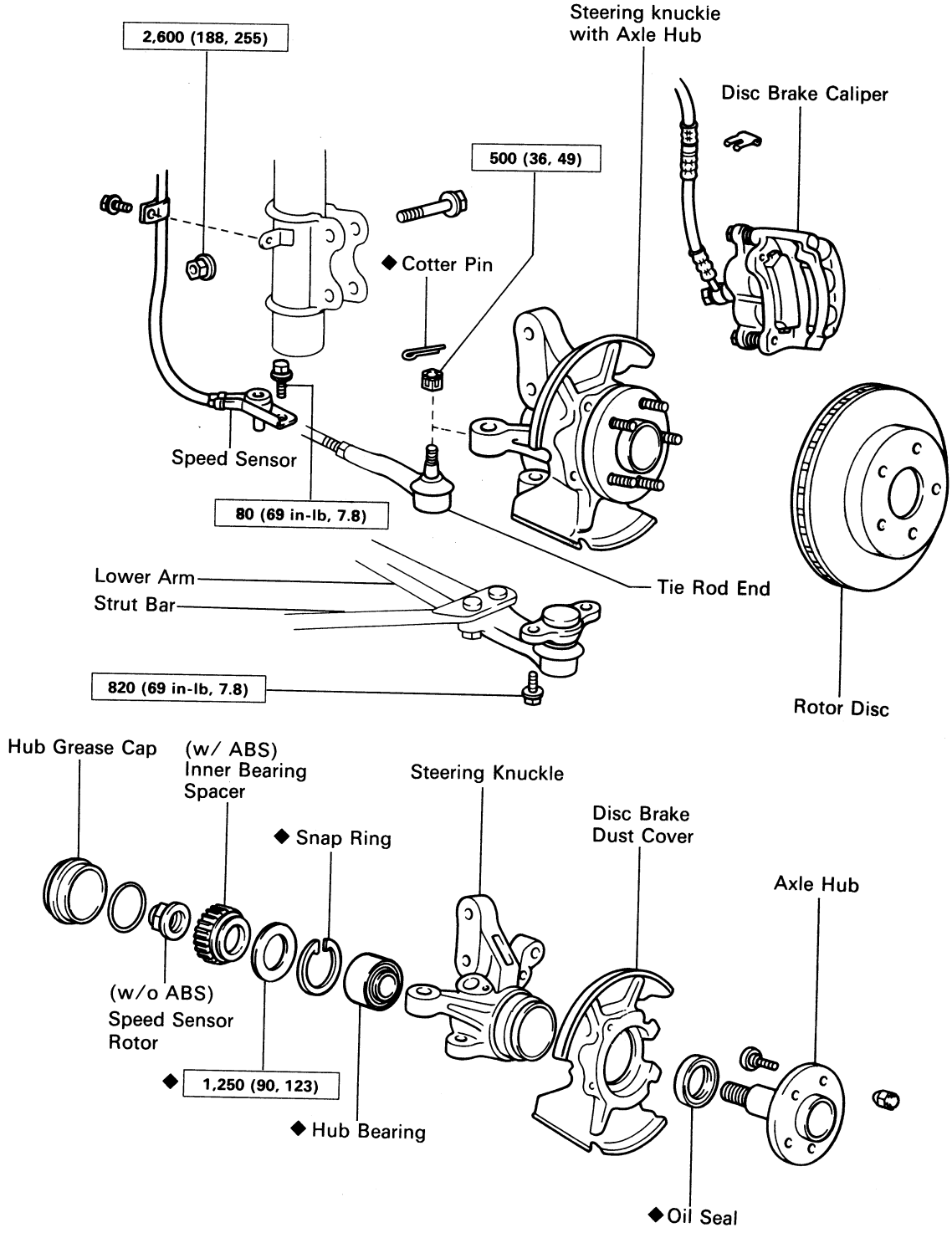

kg-cm (ft-lb, N·m) : Specified torque

◆ Non-reusable part

SA1930

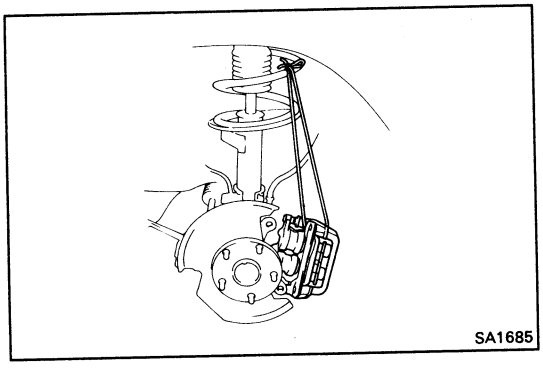
SA1685

REMOVAL OF FRONT AXLE HUB

(See page SA-9)

1. REMOVE BRAKE CALIPER AND ROTOR DISC

(a) Remove the brake caliper from the steering knuckle and suspend it with wire.

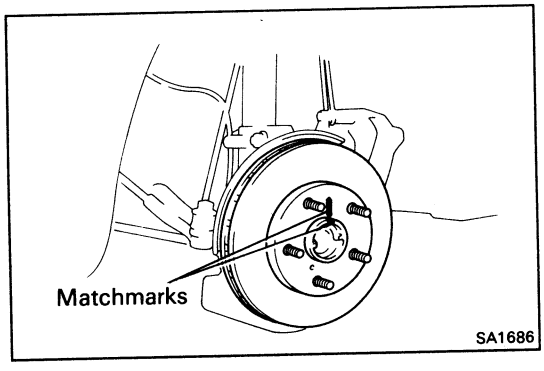

SA1686

(b) Remove the rotor disc.

HINT: Before removing the rotor disc, place the matchmarks on the axle hub and rotor disc.

2. CHECK BEARING PLAY IN AXIAL DIRECTION

Bearing play: 0.05 mm (0.0020 in.) or less

If the bearing play is greater than the maximum, replace the bearing.

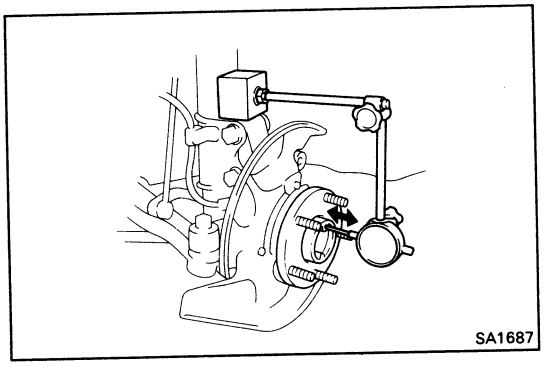
SA1687

3. (w/ ABS) REMOVE SPEED SENSOR

Remove the bolt and pull out the speed sensor.

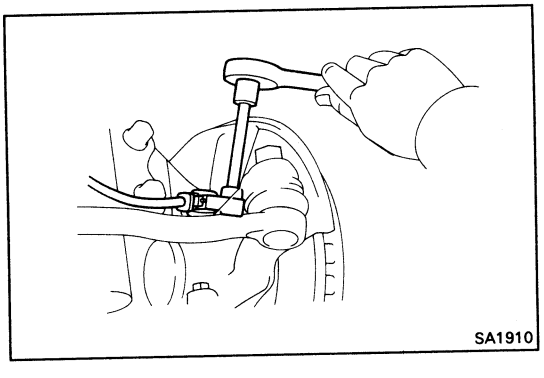
SA1910

4. LOOSEN BOLTS AND NUTS OF SHOCK ABSORBER LOWER BRACKET

Loosen the bolts and nuts, and remove the nuts.

HINT: Leave the bolts not to drop the steering knuckle assembly.

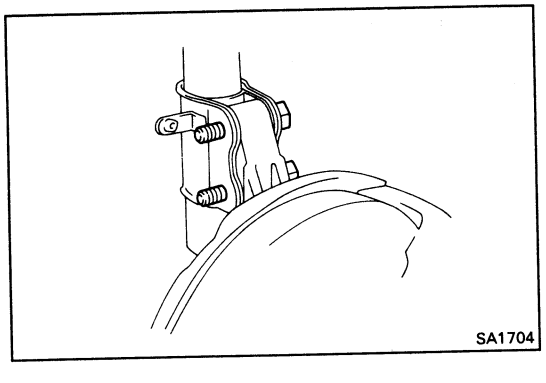
SA1704

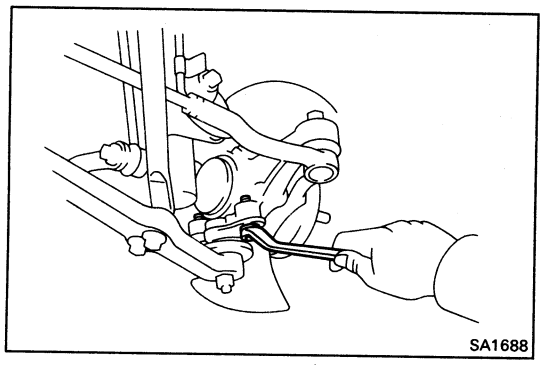

5. DISCONNECT LOWER BALL JOINT AND TIE ROD END

(a) Loosen the two ball joint set bolts.

(b) Remove the cotter pin and nut from the tie rod end.

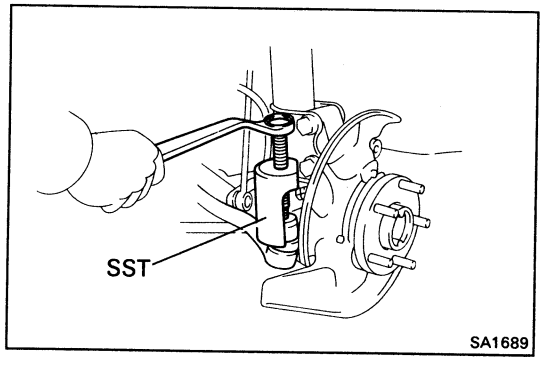

(c) Using SST, disconnect the tie rod end from the steering knuckle.

SST 09610-20012

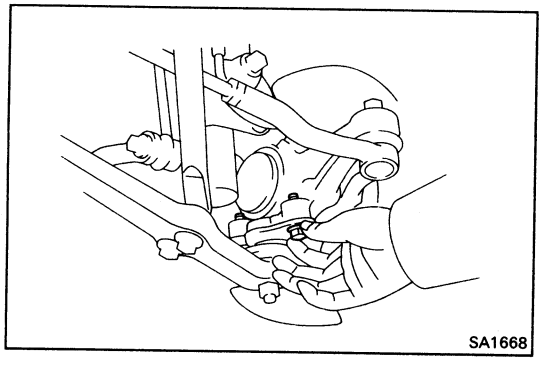

(d) Remove the two bolts and ball joint from the steering knuckle.

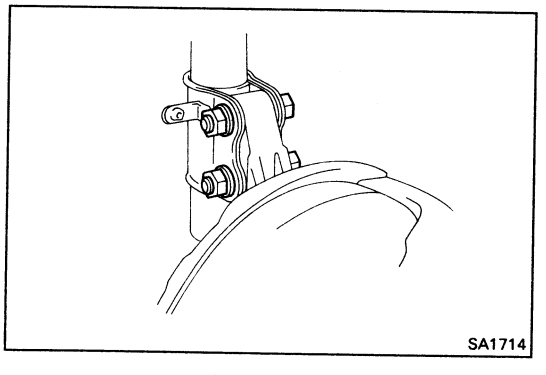

6. REMOVE STEERING KNUCKLE WITH AXLE HUB

Remove the two upper axle hub bolts and remove the steering knuckle.

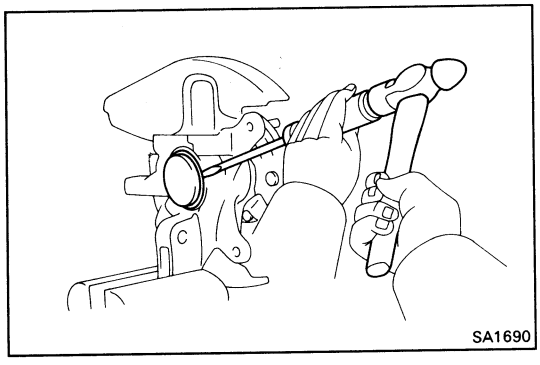

DISASSEMBLY OF FRONT AXLE HUB

(See page SA-9)

1. **REMOVE HUB BEARING CAP**
   (a) Clamp the steering knuckle in a soft jaw vice.
   (b) Using a screwdriver and hammer, remove the hub bearing cap.

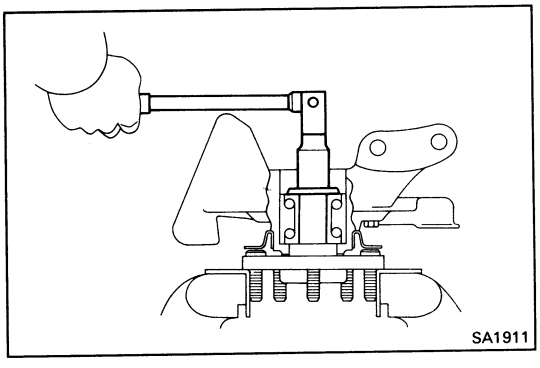

2. **REMOVE FRONT AXLE HUB LOCK NUT**
   (a) Clamp the axle hub in soft jaw vice.

   HINT: Close vice until it holds hub bolt. Do not tighten further.

   (b) Using a hammer and chisel, loosen the staked part of the nut and remove the lock nut.

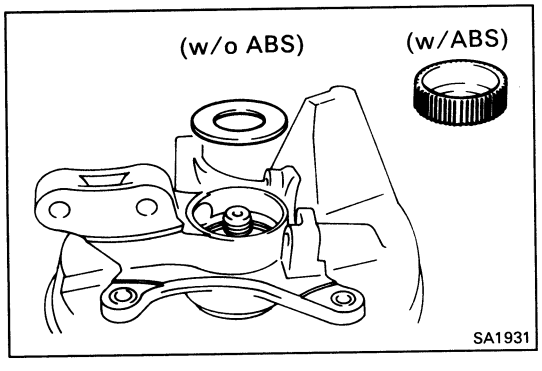

3. **(w/ ABS)**
   REMOVE SPEED SENSOR ROTOR

   NOTICE: Take care to not scratch the serrations of speed sensor rotor.

4. **(w/o ABS)**
   REMOVE BEARING INNER SPACER

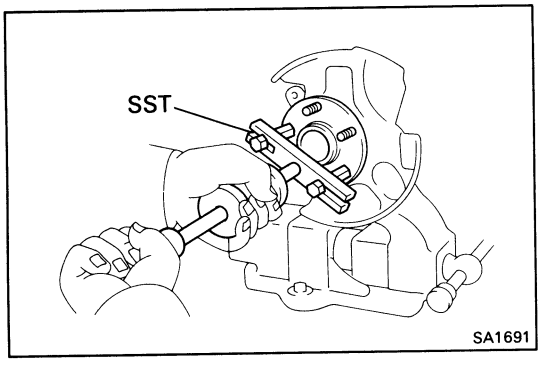

5. **REMOVE AXLE HUB**
   (a) Remove the disc brake dust cover.
   (b) Using SST, remove the axle hub from the steering knuckle.

   SST 09520-00031

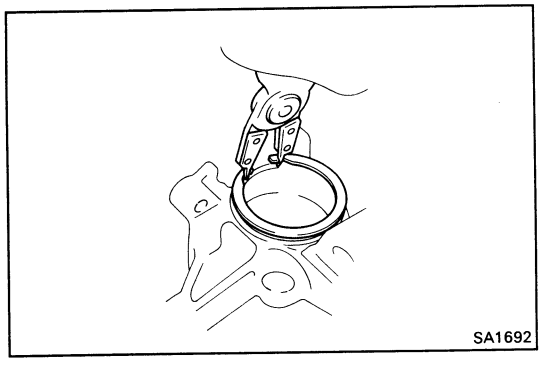

6. **REMOVE HUB BEARING**
   (a) Using snap ring pliers, remove the hole snap ring.

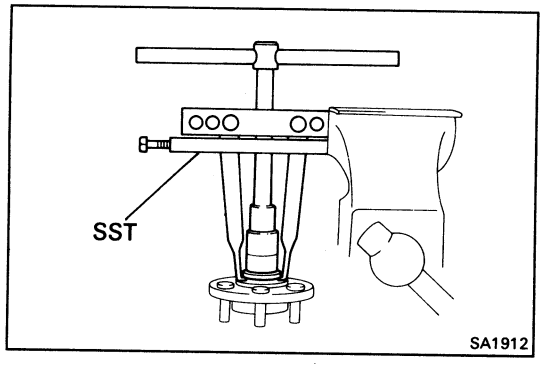

(b) Using SST, remove the hub bearing inner race (outside) from the axle hub.

SST 09950-20017

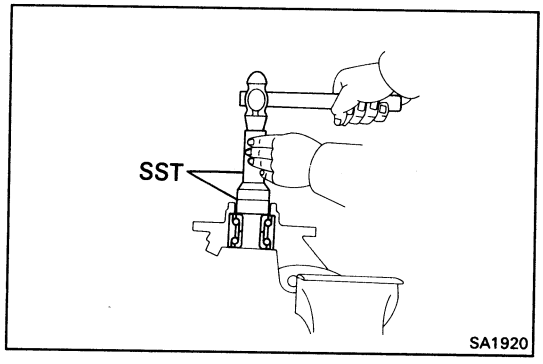

(c) First place the removed inner race (outside) in the bearing.

(d) Using SST, drive out the hub bearing from the steering knuckle.

SST 09608-30012 (09608-04020), 09649-17010

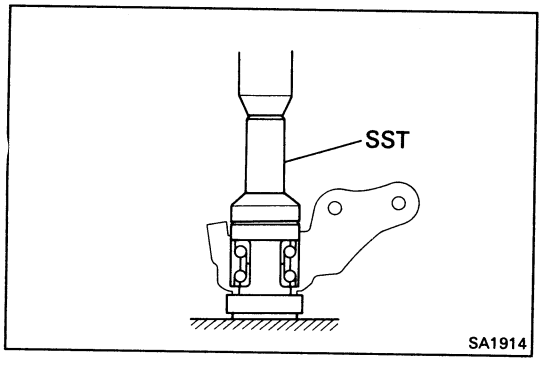

ASSEMBLY OF FRONT AXLE HUB

(See page SA-9)

1. INSTALL HUB BEARING

(a) Using SST, install the hub bearing.

SST 09608-30012 (09608-04020)

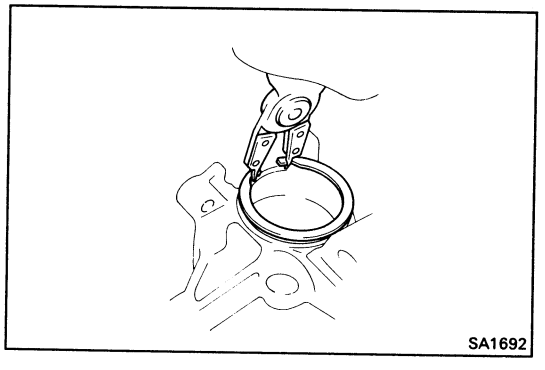

(b) Using snap ring pliers, install the hole snap ring.

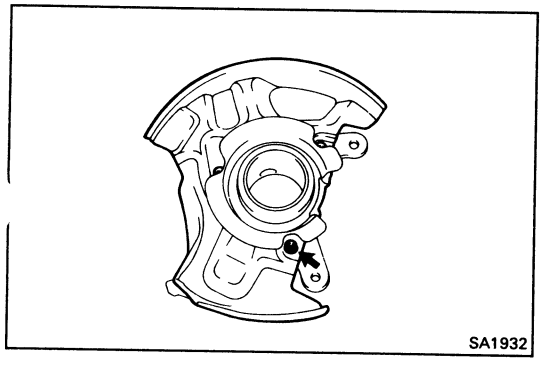

2. INSTALL DISC BRAKE DUST COVER

HINT: Apply liquid sealer or sealant the dust cover and steering knuckle connection before assemble.

(a) Install the dust cover in place.

(b) Using a torx driver, install and torque the four bolts.

Torque: 85 kg-cm (74 in.-lb, 8.3 N·m)

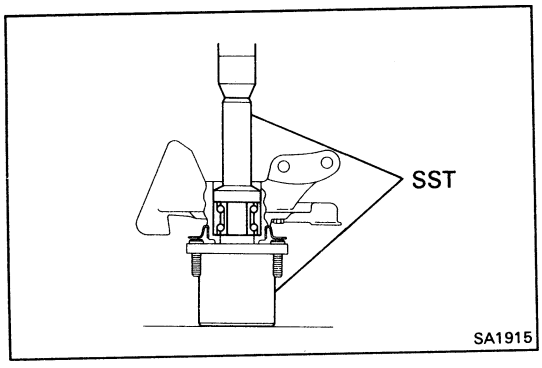

3. **INSTALL AXLE HUB**

(a) Coat the MP grease to the oil seal lip.

(b) Install the bearing outer and inner race into the hub bearing.

(c) Using SST, install the axle hub to the steering knuckle.

SST 09608-30012 (09608-04020)

(d) (w/ ABS)
Install the speed sensor rotor.

NOTICE: Take care to not scratch the serrations of speed sensor rotor.

(w/o ABS)
Install the bearing inner spacer.

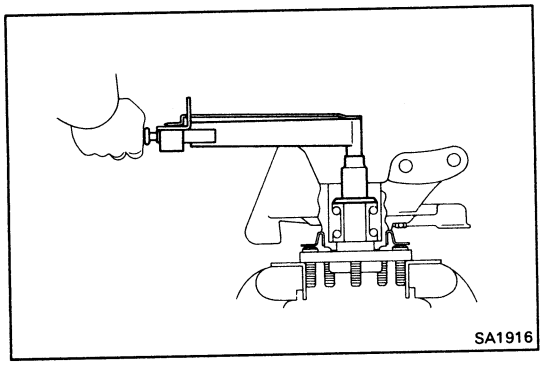

(e) Install and torque the axle hub lock nut.

Torque: 1,250 kg-cm (90 ft-lb, 123 N·m)

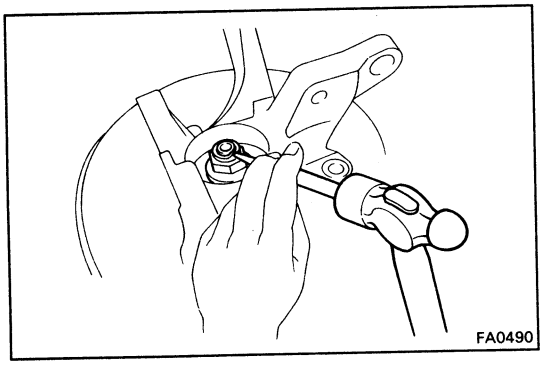

(f) Using a hammer and punch, stake the nut.

4. **INSTALL HUB GREASE CAP**

Using SST, install hub grease cap.

SST 09608-30012(09608-04020), 09649-17010

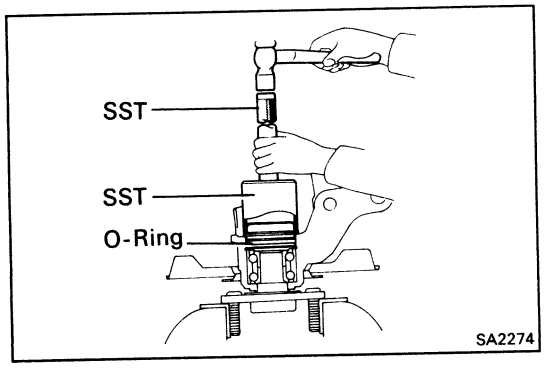

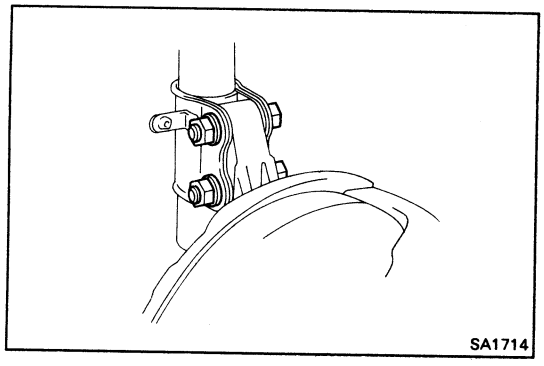
SA1714

INSTALLATION OF FRONT AXLE HUB

(See page SA-9)

1. **INSTALL STEERING KNUCKLE TO SHOCK ABSORBER**
   (a) Connect the steering knuckle to the shock absorber lower bracket with two bolts.
   (b) Install and finger tighten the two nuts.

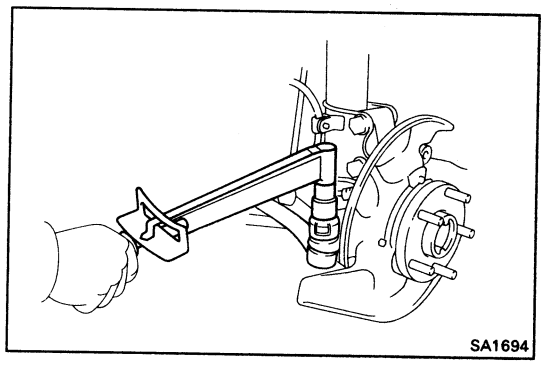
SA1694

2. **CONNECT TIE ROD END TO STEERING KNUCKLE**
   Torque the castle nut and secure it with a new cotter pin.
   Torque: 500 kg-cm (36 ft-lb, 49 N·m)

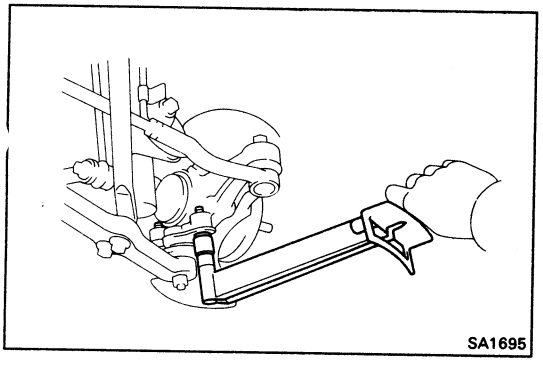
SA1695

3. **TORQUE STEERING KNUCKLE TO BALL JOINT**
   Install and torque the two bolts.
   Torque: 820 kg-cm (59 ft-lb, 80 N·m)

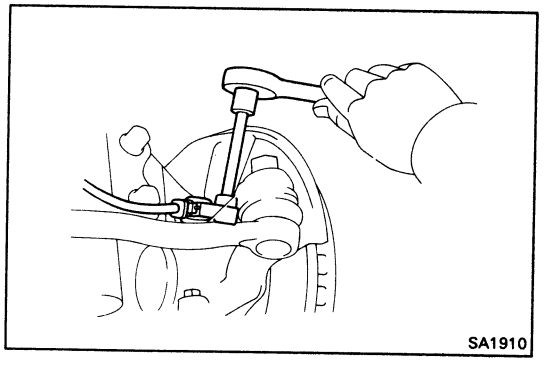
SA1910

4. **(w/ ABS)**
   INSTALL SPEED SENSOR
   Install the speed sensor in place, then install and torque the bolt.
   HINT: Before installing, check that there is no ferric chip or foreign material on the sensor tip.
   Torque: 80 kg-cm (69 in.-lb, 7.8 N·m)

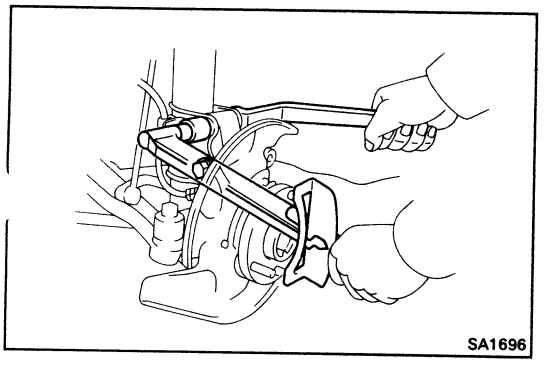
SA1696

5. **TORQUE STEERING KNUCKLE TO SHOCK ABSORBER**
   Torque: 2,600 kg-cm (188 ft-lb, 255 N·m)

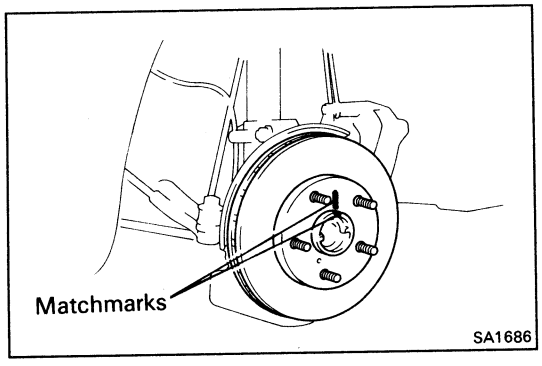

6. INSTALL ROTOR DISC TO AXLE HUB

HINT: Before removing the rotor disc, place the matchmarks on the axle hub and rotor disc.

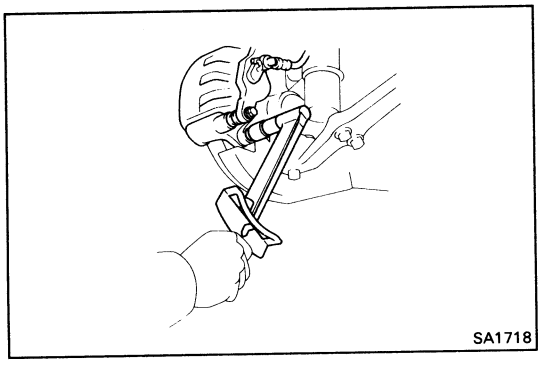

7. INSTALL DISC BRAKE CALIPER TO STEERING KNUCKLE

Install and torque the two bolts.

Torque: 600 kg-cm (43 ft-lb, 59 N·m)

REPLACEMENT OF FRONT AXLE HUB BOLT

1. REMOVE BRAKE CALIPER

Remove the brake caliper from the steering knuckle and suspend it with a wire.

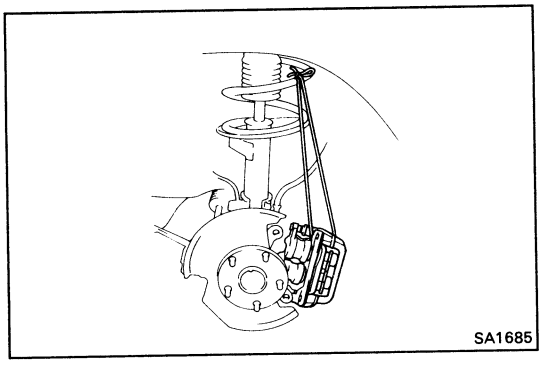

2. REMOVE ROTOR DISC

Align the matchmarks, and install the rotor disc to the axle hub.

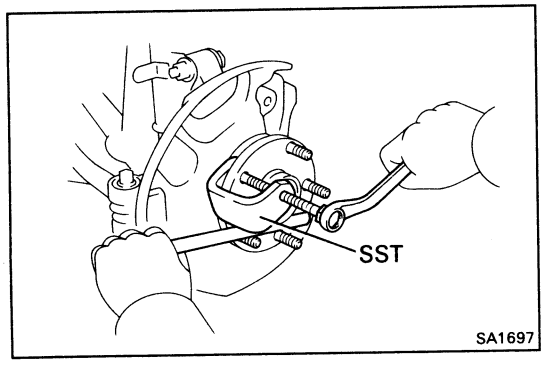

3. REMOVE FRONT AXLE HUB BOLT

(a) Align the disc brake dust cover cutting portion and axle hub bolt.

(b) Using SST, remove the axle hub bolt.

SST 09628-10011

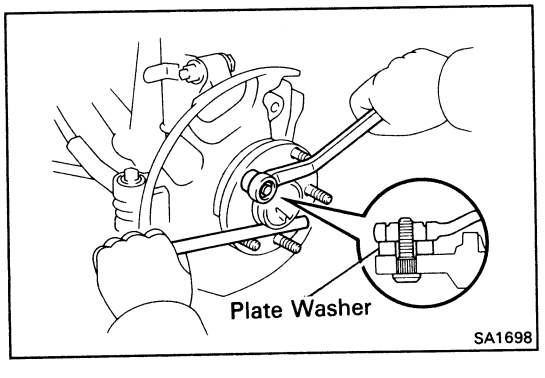

4. INSTALL FRONT AXLE HUB BOLT

(a) Install a new hub bolt from the backing plate side.

(b) Install the suitable plate washer and nut.

(c) Tighten the nut, while holding the axle hub.

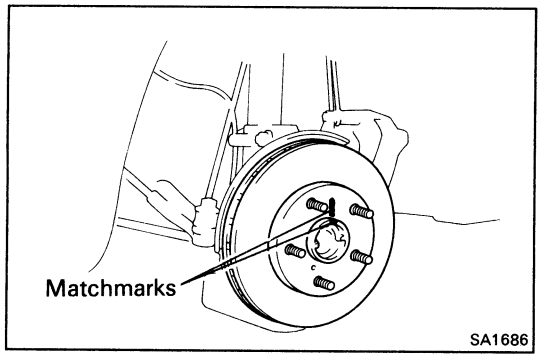

5. INSTALL ROTOR DISC

Align the matchmarks and install the rotor disc to the axle hub.

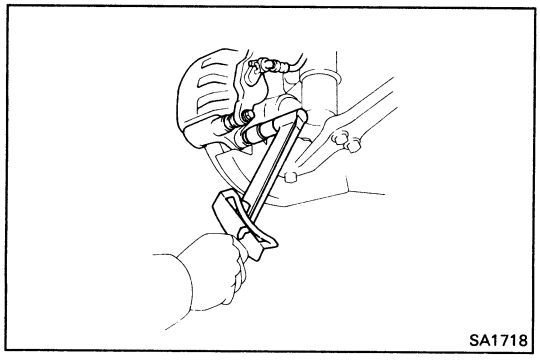

6. INSTALL DISC BRAKE CALIPER TO STEERING KNUCKLE

Install and torque the two bolts.

Torque: 600 kg-cm (43 ft-lb, 59 N·m)

FRONT SUSPENSION

Front Shock Absorber

COMPONENTS

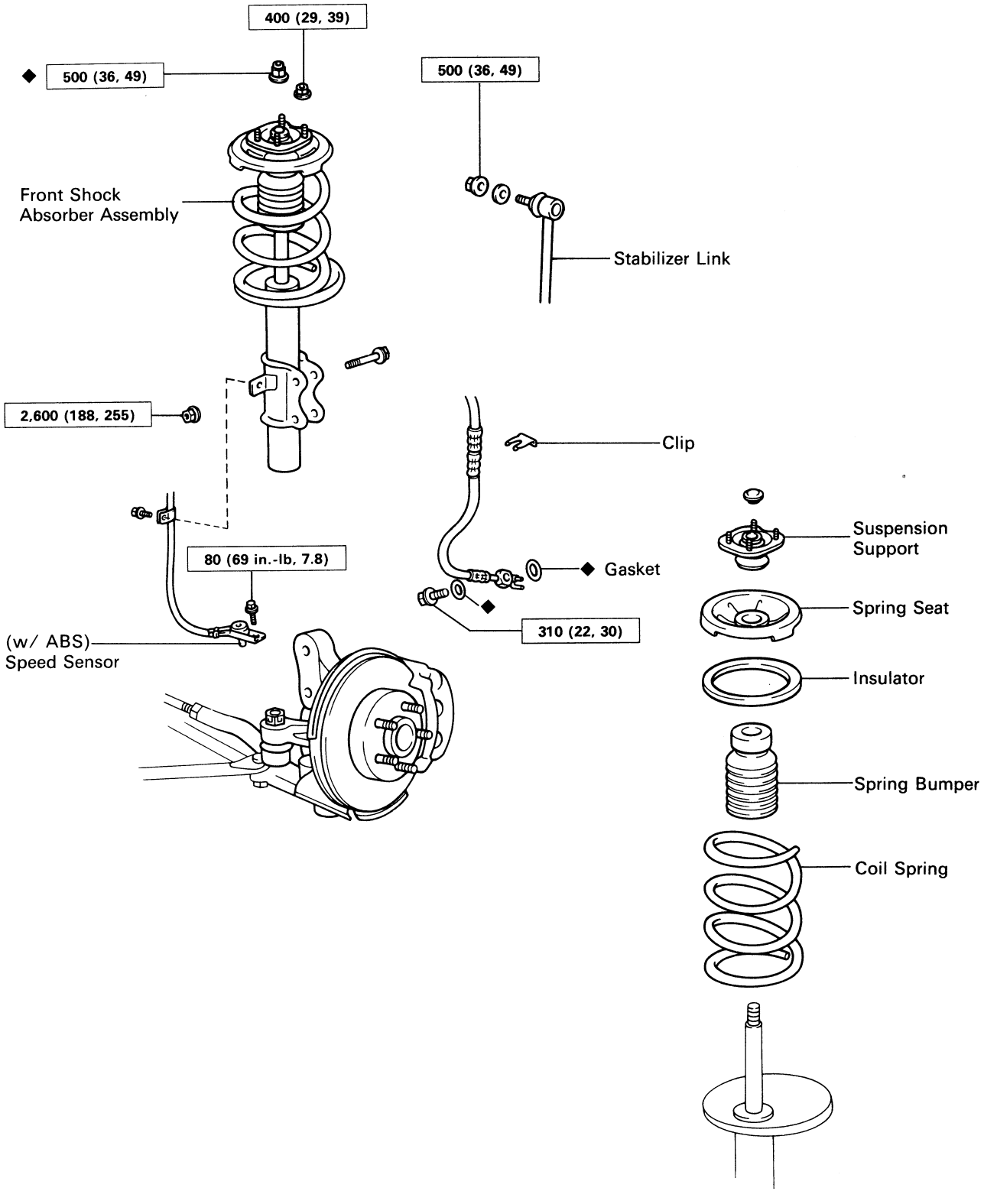

kg-cm (ft-lb, N·m) : Specified torque

◆ Non-reusable part

SA1933

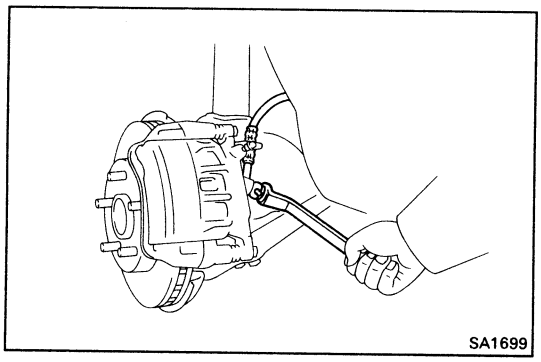
SA1699

REMOVAL OF SHOCK ABSORBER ASSEMBLY

(See page SA-18)

1. DISCONNECT BRAKE HOSE

(a) Remove the union bolt and two gaskets, and disconnect the brake hose from the disc brake caliper.

HINT: Drain the brake fluid into a container.

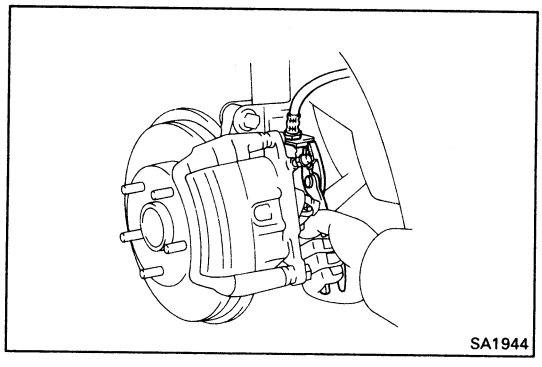
SA1944

(b) Remove the clip from the brake hose.

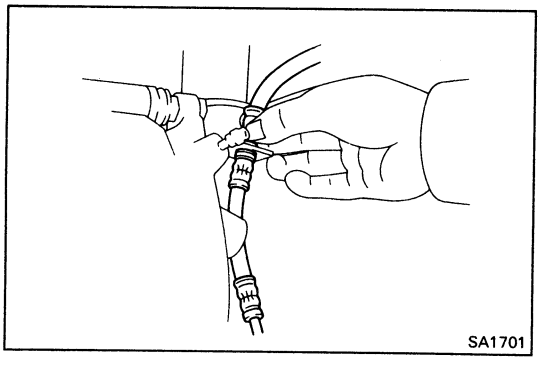
SA1701

(c) Pull off the brake hose from the brake hose bracket.

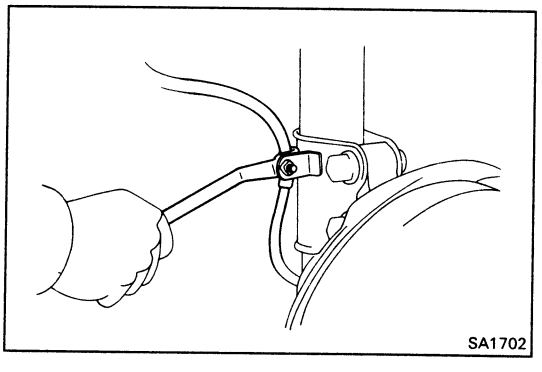
SA1702

(d) (w/ ABS)
Remove the speed sensor wire harness clamp bracket bolt.

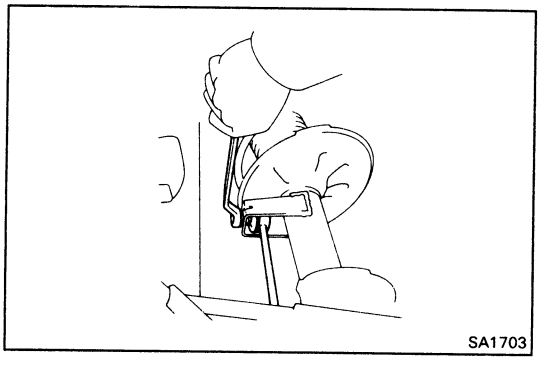
SA1703

2. DISCONNECT STABILIZER LINK

Disconnect the stabilizer link from the shock absorber.

HINT: If the ball joint stud turns together with the nut, use a hexagon wrench 5 mm (0.197 in.) to hold the stud.

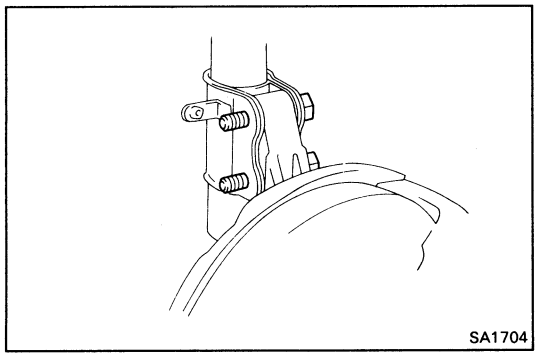
SA1704

3. DISCONNECT SHOCK ABSORBER FROM STEERING KNUCKLE

Remove the bolts and nuts, disconnect the shock absorber from the steering knuckle.

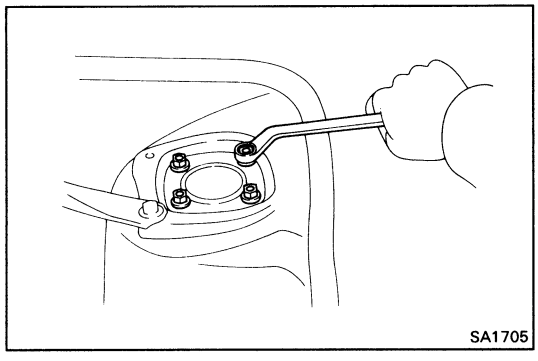
SA1705

4. REMOVE SHOCK ABSORBER FROM BODY

(a) Remove the four nuts holding the top of the suspension support.

(b) Remove the shock absorber from the body.

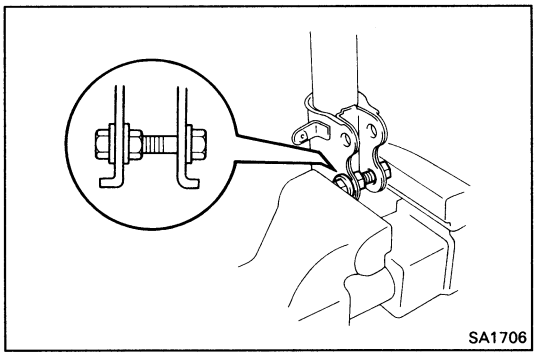
SA1706

5. CLAMP SHOCK ABSORBER IN VISE

Install a bolt and two nuts to the bracket at the lower portion of the shock absorber shell and secure it in a vise.

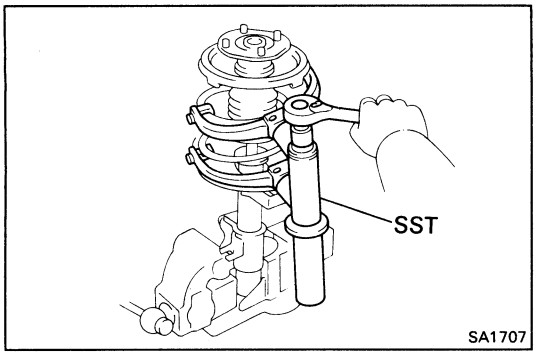

SA1707

6. REMOVE COIL SPRING

(a) Using SST, compress the coil spring.

SST 09727-00045, 09727-30020

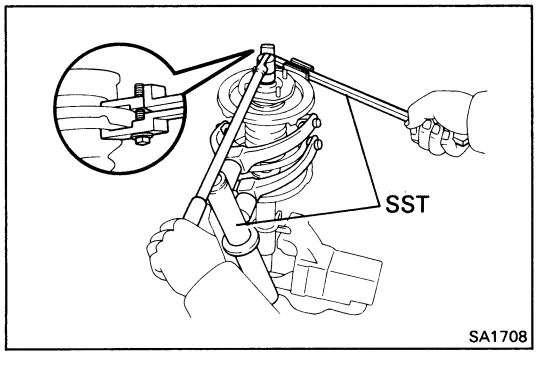

SA1708

(b) Using SST, hold the spring seat so that it will not turn, and remove the nut.

SST 09729-22031

(c) Remove the suspension support, dust seal, spring seat, spring, insulators and bumper.

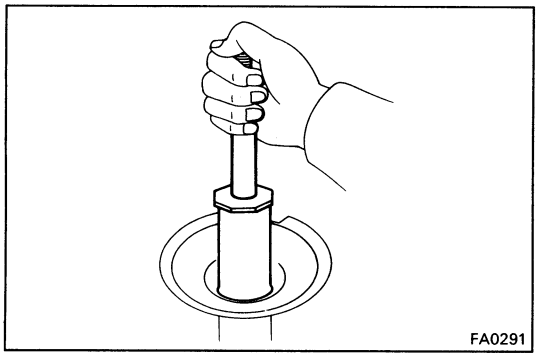
FA0291

INSPECTION OF FRONT SHOCK ABSORBER ASSEMBLY

INSPECT OPERATION OF SHOCK ABSORBER

(a) While pushing rod, check that the pull throughout the stroke is even, and there is no abnormal resistance or noise.

(b) Push the piston rod in fully and release it. Check that it returns at a constant speed throughout.

If the absorber operation is defective, replace the absorber, as and assembly.

NOTICE: Before discarding the shock absorber, first loosen the ring nut 2 or 3 turns with SST to release the gas completely.

SST 09720-00012 (09721-00071)

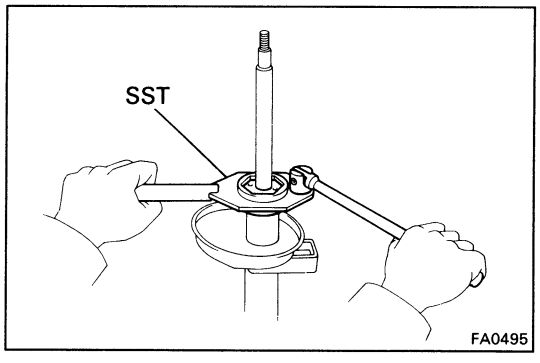

FA0495

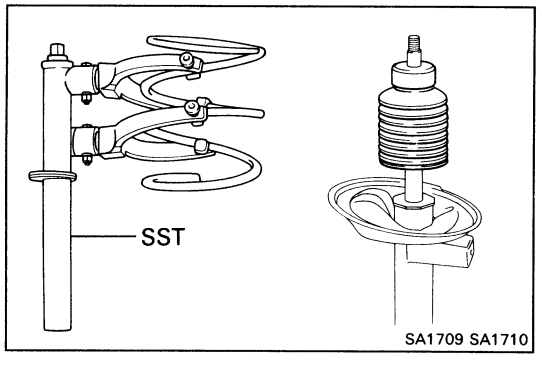

SA1709 SA1710

INSTALLATION OF FRONT SHOCK ABSORBER ASSEMBLY

(See page SA-18)

1. **INSTALL BUMPER COIL SPRING, SPRING SEAT AND DUST SEAL**

(a) Using SST, compress the coil spring.

(b) Install the bumper to the piston rod.

SST 09727-00045, 09727-30020

(c) Align the coil spring end with the lower seat hollow and install.

(d) Face the " OUT " mark of the spring seat toward the outside of the vehicle, and install it.

(e) Install the dust seal on the spring seat.

(f) Install the suspension support.

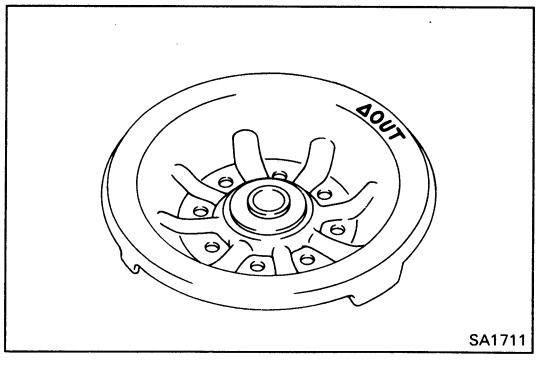

SA1711

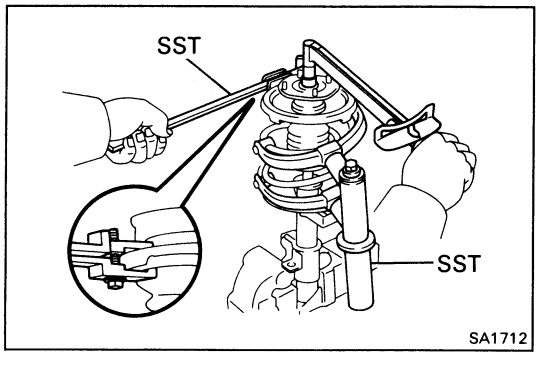

SA1712

(g) Using SST, install and torque a new suspension support nut.

SST 09729-22031

Torque: 500 kg-cm (36 ft-lb, 49 N·m)

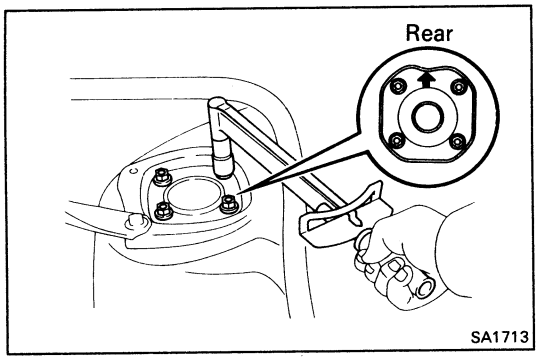

2. INSTALL SHOCK ABSORBER ASSEMBLY TO BODY

Install the four bolts holding the shock absorber to the body. Torque the nut.

HINT: Install the shock absorber with the hollow part to the rearward.

Torque: 400 kg-cm (29 ft-lb, 39 N·m)

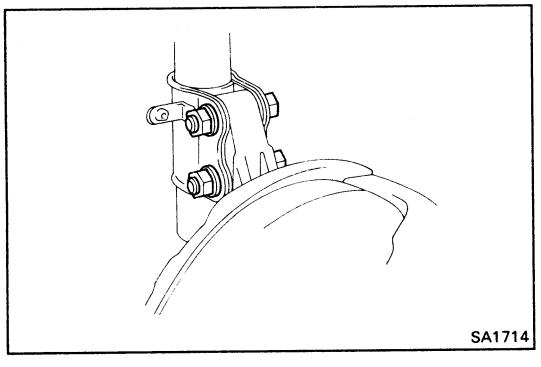

3. CONNECT SHOCK ABSORBER TO STEERING KNUCKLE

(a) Connect the steering knuckle to the shock absorber lower bracket.

(b) Insert the two bolts from the rear side.

(c) Install and torque the two nuts.

Torque: 2,600 kg-cm (188 ft-lb, 255 N·m)

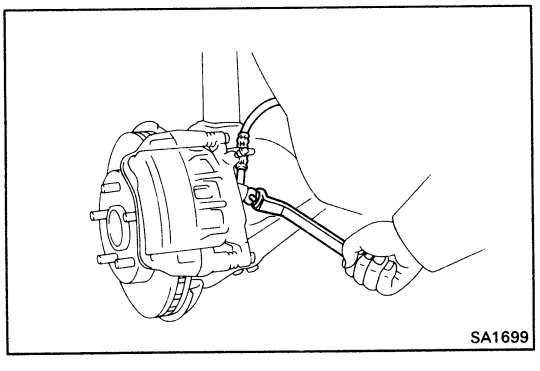

4. CONNECT BRAKE HOSE

(a) Run the brake hose through the brake hose bracket.

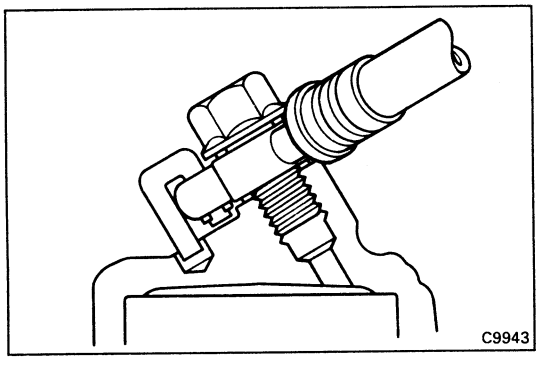

(b) Connect the brake hose through the disc brake caliper with the union and new gaskets.

Torque: 310 kg-cm (22 ft-lb, 30 N·m)

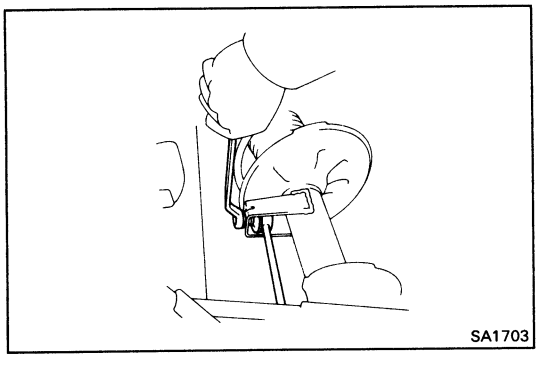

5. CONNECT STABILIZER LINK

Install and torque the nut.

HINT: If the ball joint stud turns together with the nut, use a hexagon wrench 5 mm (0.197 in.) to hold the stud.

Torque: 650 kg-cm (47 ft-lb, 64 N·m)

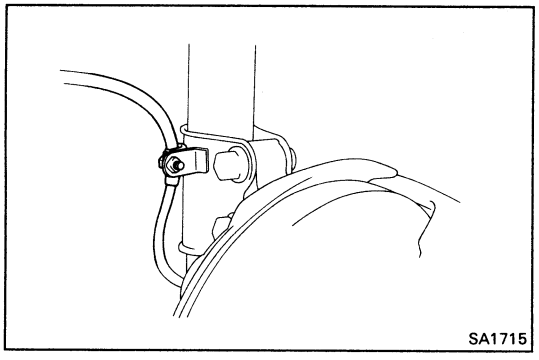
SA1715

6. **(w/ ABS)**
CONNECT SPEED SENSOR WIRE HARNESS TO SHOCK ABSORBER

Clamp the speed sensor to the steering knuckle and install the wire harness clamp bracket to the shock absorber with a bolt.

7. **BLEED BRAKE SYSTEM**
(See page BR-7)

8. **INSPECT FRONT WHEEL ALIGNMENT**
(See page SA-4)

Ball Joints, Lower Arm, Stabilizer Bar and Strut Bar

COMPONENTS

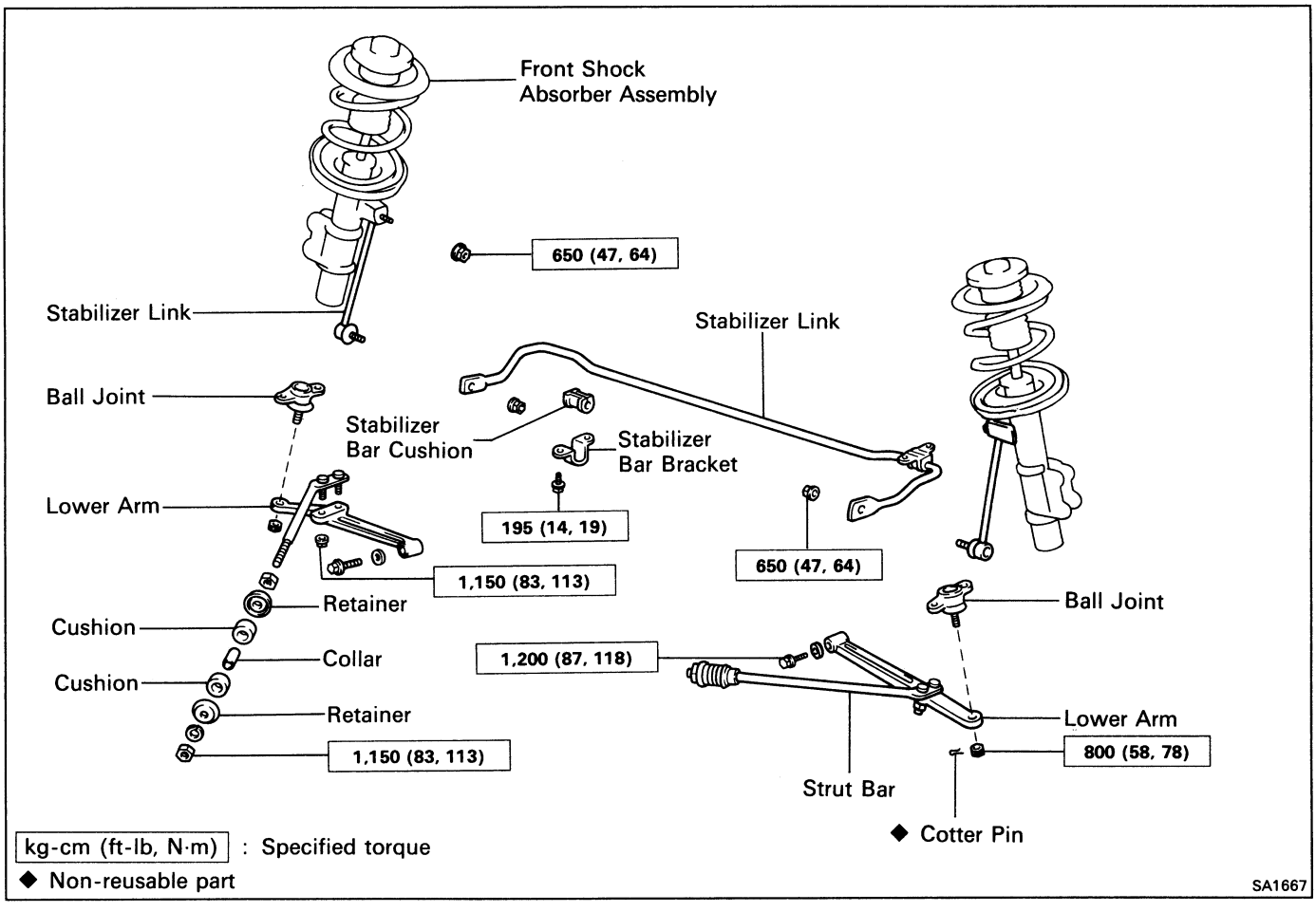

Ball Joints

INSPECTION OF BALL JOINTS

1. INSPECT BALL JOINTS FOR EXCESSIVE LOOSENESS

(a) Jack up the front of the vehicle and place a wooden block with a height of 180 - 200 mm (7.09 - 7.87 in.) under one front tire.

(b) Lower the jack until there is about half a load on the front coil spring. Place stands under the vehicle for safety.

(c) Make sure the front wheels are in a straight forward position and block the wheel with chocks.

(d) Move the lower arm up and down and check that the ball joint has no excessive play.

Ball joint vertical play: 0 mm (0 in.)

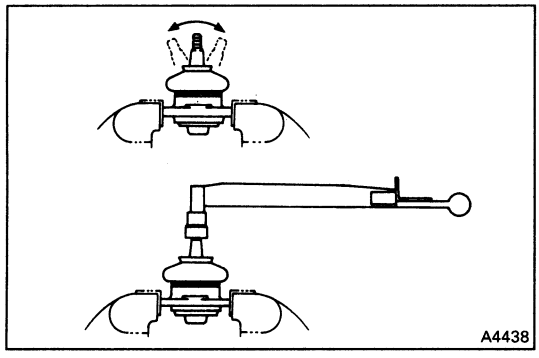

2. INSPECT BALL JOINT FOR ROTATION

(a) Remove the ball joint.

(b) Flip the ball joint stud back and forth 5 times as shown in the figure, before installing the nut.

(c) Using a torque gauge, turn the nut continuously one turn each 2 - 4 seconds and take the torque reading on the fifth turn.

Torque (turning): 8 – 25 kg-cm (7 – 22 in.-lb, 0.8 – 2.5 N·m)

If not within specification, replace the ball joint.

(d) Install the ball joint.

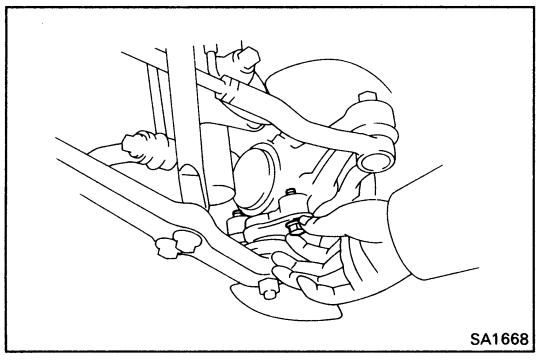

Lower Arm

REMOVAL OF LOWER ARM

(See page SA-24)

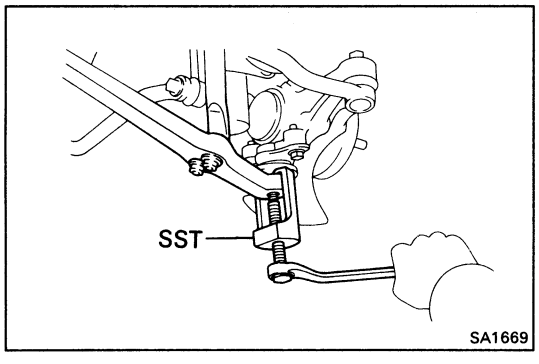

1. DISCONNECT LOWER ARM FROM BALL JOINT

(a) Remove the cotter pin and castle nut.

(b) Using SST, disconnect the lower arm from the ball joint.

SST 09610-20012

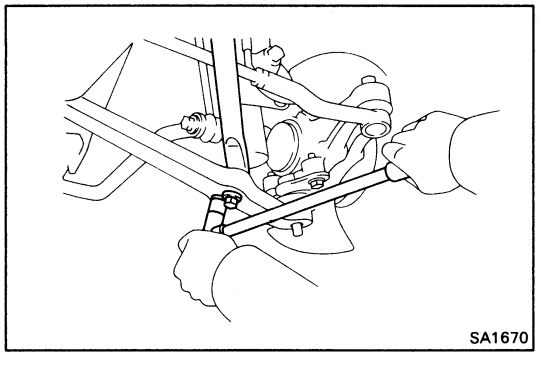

2. DISCONNECT STRUT BAR FROM LOWER ARM

Remove the two nuts and disconnect the strut bar from the lower arm.

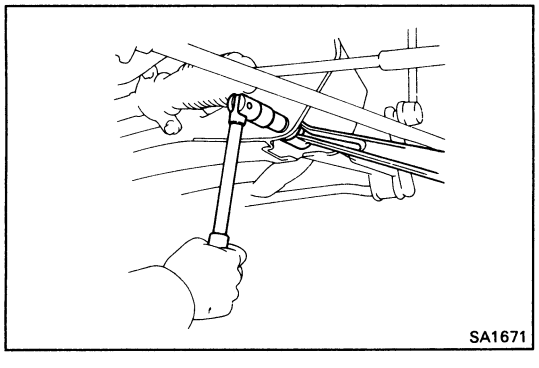

3. REMOVE LOWER ARM

Remove the bolt and lower arm from the body.

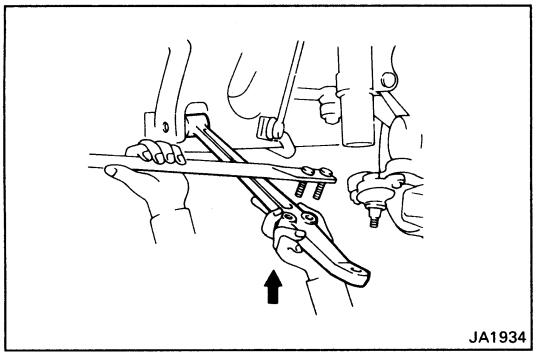
JA1934

INSTALLATION OF LOWER ARM

(See page SA-24)

1. INSTALL LOWER ARM

(a) Temporarily install the strut bar to the lower arm with the nuts.

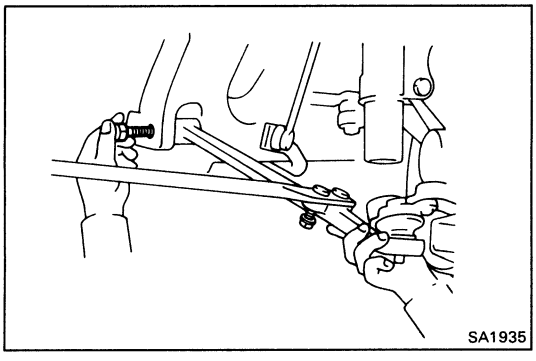
SA1935

(b) Temporarily install the lower arm to the body with the bolt.

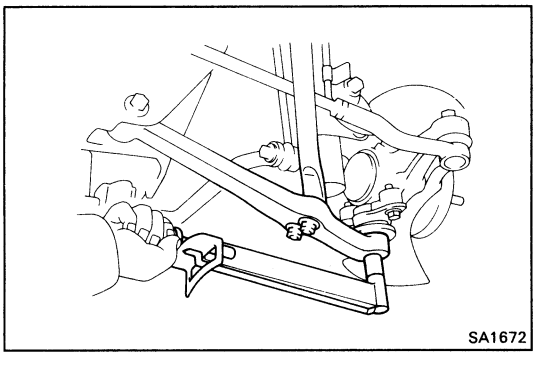
SA1672

2. CONNECT LOWER ARM TO BALL JOINT

(a) Connect the lower arm to the ball joint and torque the castle nut.

Torque: 800 kg-cm (58 ft-lb, 78 N·m)

(b) Install a new cotter pin.

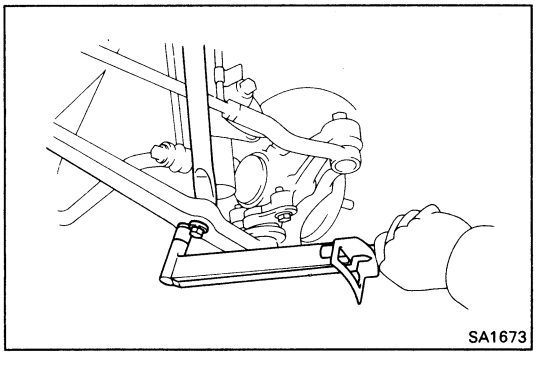
SA1673

3. TORQUE STRUT BAR TO LOWER ARM

Torque: 1,150 kg-cm (83 ft-lb, 113 N·m)

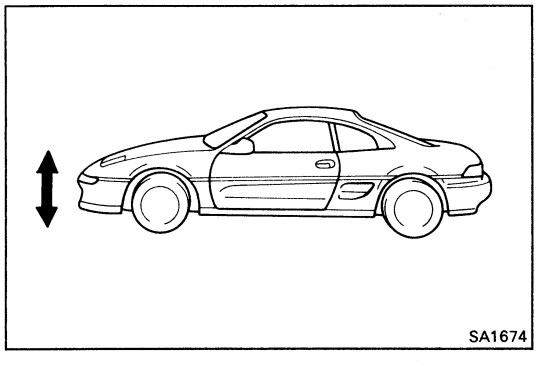
SA1674

4. TORQUE LOWER ARM TO BODY

(a) Install the tires and lower the vehicle. Then rock the vehicle up and down to stabilize suspension.

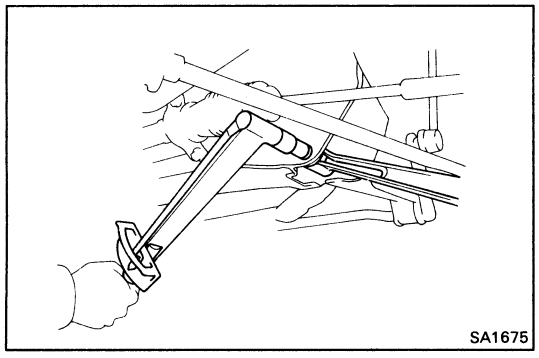
SA1675

(b) Torque the nut.

Torque: 1,200 kg-cm (87 ft-lb, 118 N·m)

(See page SA-24)

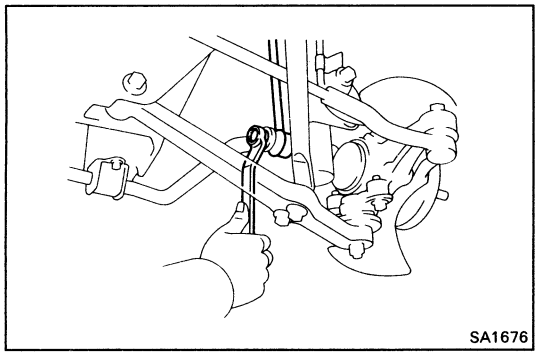
SA1676

Stabilizer Bar and Link

(See page SA-24)

REMOVAL OF STABILIZER BAR AND LINK

1. DISCONNECT STABILIZER LINK FROM STABILIZER BAR

Remove the nut and disconnect the stabilizer link from stabilizer bar.

HINT: If the ball joint stud turns together with the nut, use a hexagon wrench 5 mm (0.197 in.) to hold the stud.

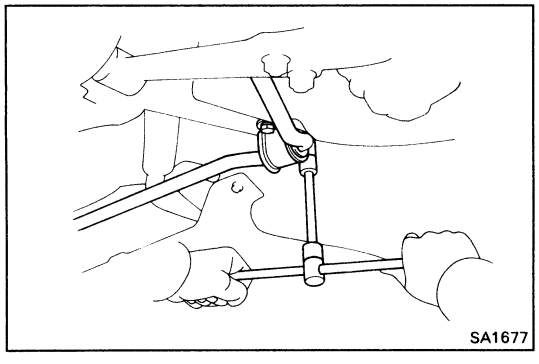
SA1677

2. REMOVE STABILIZER BAR FROM BODY

Remove the bolts and stabilizer bar with brackets.

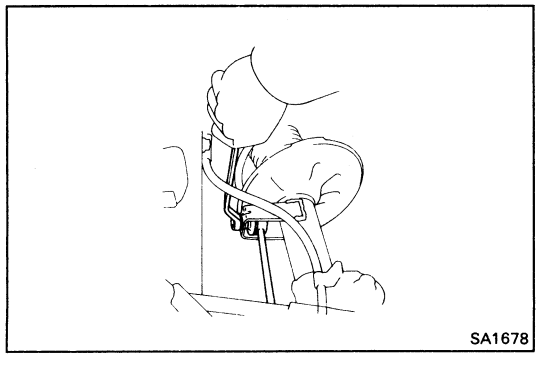
SA1678

3. REMOVE STABILIZER LINK FROM FRONT SHOCK ABSORBER

Remove the nut and stabilizer link.

HINT: If the ball joint stud turns together with the nut, use a hexagon wrench 5 mm (0.197 in.) to hold the stud.

4. REMOVE STABILIZER BAR BRACKETS AND STABILIZER BAR CUSHIONS FROM STABILIZER BAR

INSPECTION OF STABILIZER LINK

INSPECT STABILIZER LINK

Rotate ball joint arm in all directions. If movement is not smooth and free, replace stabilizer link.

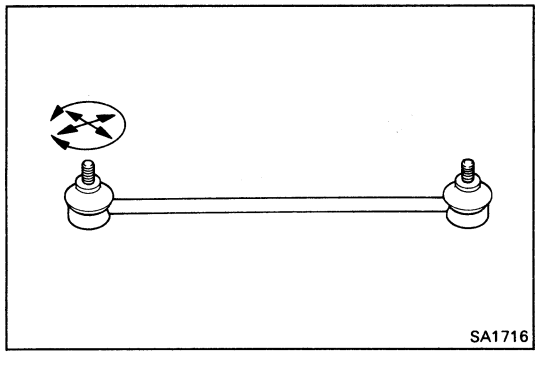
SA1716

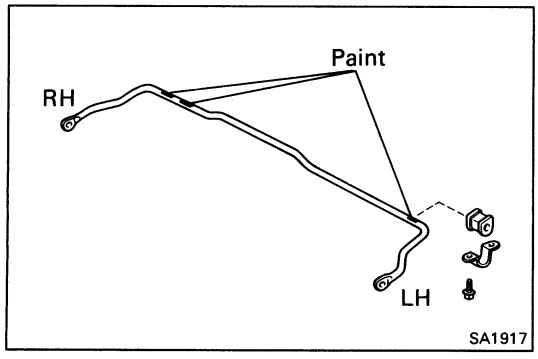

INSTALLATION OF STABILIZER BAR AND LINK

(See page SA-24)

1. INSTALL STABILIZER BAR

(a) Install the stabilizer cushions on the painted portions of the stabilizer.

(b) Install the stabilizer bar in place, then install the both stabilizer brackets with the bolts and nuts.

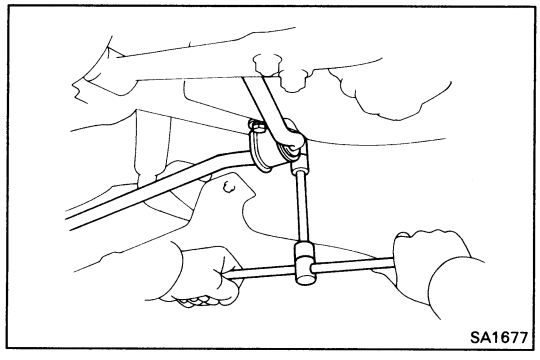

2. INSTALL STABILIZER BAR TO BODY

Install the stabilizer bar to the body.

Torque: 195 kg-cm (14 ft-lb, 19 N·m)

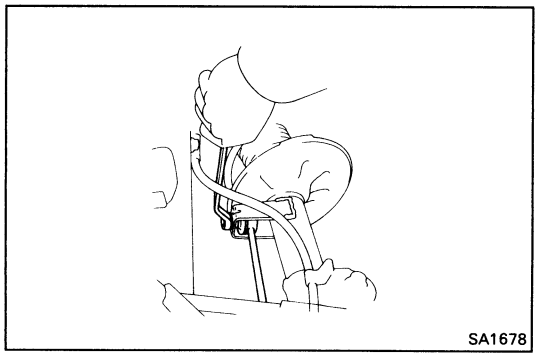

3. INSTALL STABILIZER LINK TO FRONT SHOCK ABSORBER ASSEMBLY

Install the stabilizer link to the front shock absorber and torque the nut.

HINT: If the ball joint stud turns together with the nut, use a hexagon wrench 5 mm (0.197 in.) to hold the stud.

Torque: 650 kg-cm (47 ft-lb, 64 N·m)

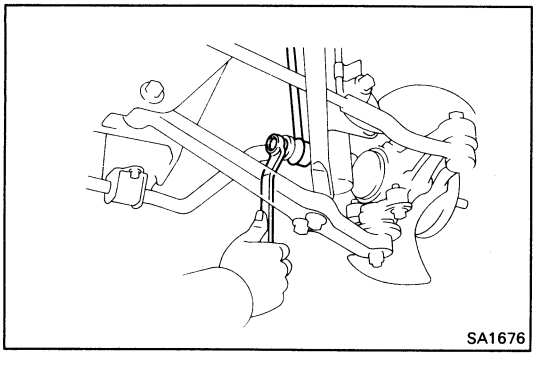

4. CONNECT STABILIZER LINK TO STABILIZER BAR

Connect the stabilizer link to the stabilizer bar and torque the nut.

HINT: If the ball joint stud turns together with the nut, use a hexagon wrench 5 mm (0.197 in.) to hold the stud.

Torque: 650 kg-cm (47 ft-lb, 64 N·m)

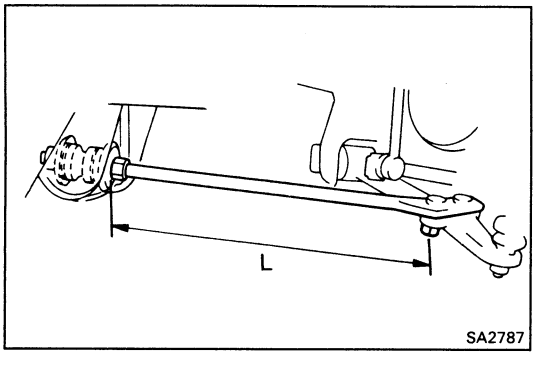

Strut Bar

(See page SA-24)

REMOVAL OF STRUT BAR

1. MEASURE LENGTH "L" BEFORE REMOVE

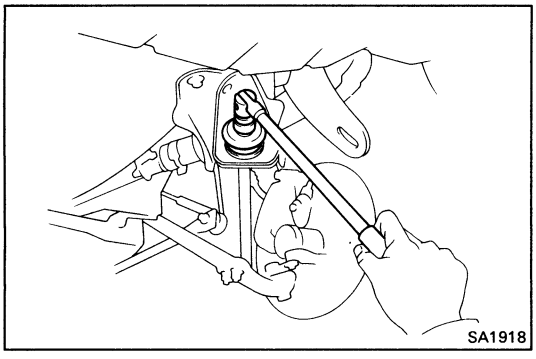
SA1918

2. REMOVE STRUT BAR

(a) Remove the nut, front retainer and cushion.

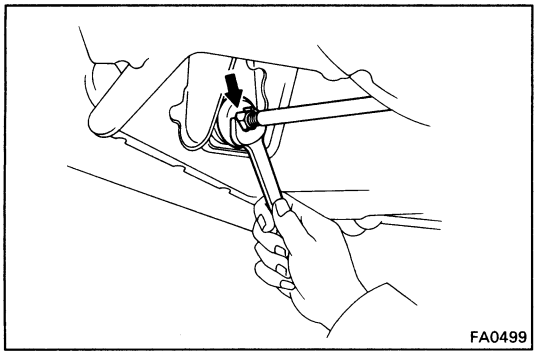
FA0499

(b) Loosen the nuts.

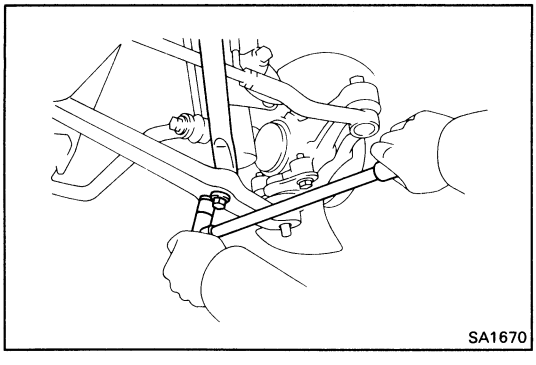
SA1670

(c) Disconnect the strut bar from the lower arm, and remove the strut bar from the body.

(d) Remove the collar, cushion, retainer and nut from the strut bar.

INSTALLATION OF STRUT BAR

(See page SA-24)

1. INSTALL STRUT BAR

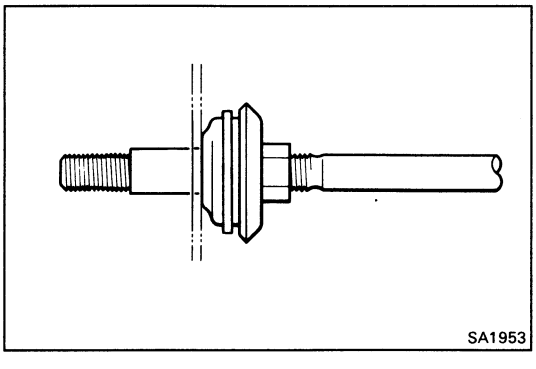
SA1953

(a) Install the nut, retainer, cushion and collar to the strut bar.

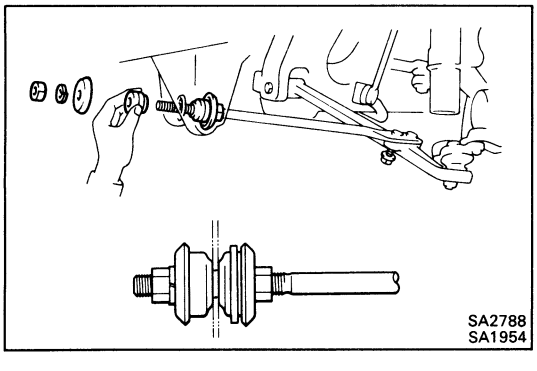
SA2788
SA1954

(b) Install the strut bar to the body, and connect to the lower arm.

(c) Install the cushion, retainer spring washer and nut.

NOTICE: Do not misinstall the front and rear cushions.

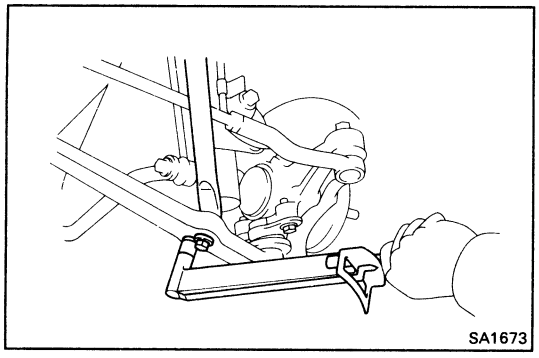
SA1673

2. **TORQUE LOWER ARM TO STRUT BAR**

Torque: 1,150 kg-cm (83 ft-lb, 113 N·m)

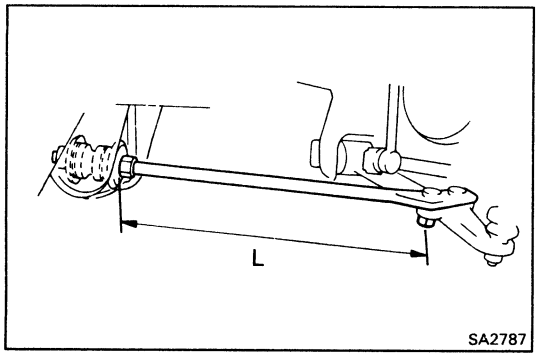

SA2787

3. **ADJUST STRUT BAR LENGTH**
(See page SA-24)

Turn the nut and adjust to precious length.

HINT: The length of "L" in figure should be approximately 362.0 mm (14.25 in.).

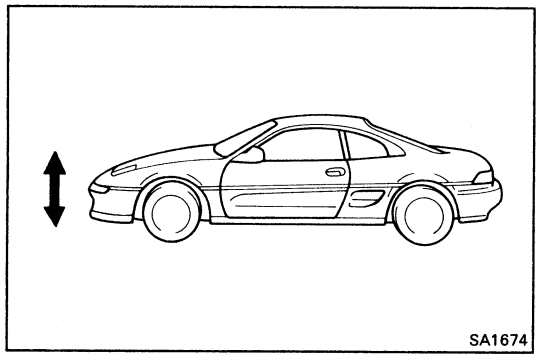
SA1674

4. **TORQUE STRUT BAR TO BODY**

(a) Install the wheel and lower the vehicle.

(b) Bounce the vehicle up and down to stabilize the suspension.

(c) Torque the nut.

Torque: 1,150 kg-cm (83 ft-lb, 113 N·m)

5. **INSPECT FRONT WHEEL ALIGNMENT**
(See page SA-4)

REAR AXLE SHAFT AND CARRIER

COMPONENTS

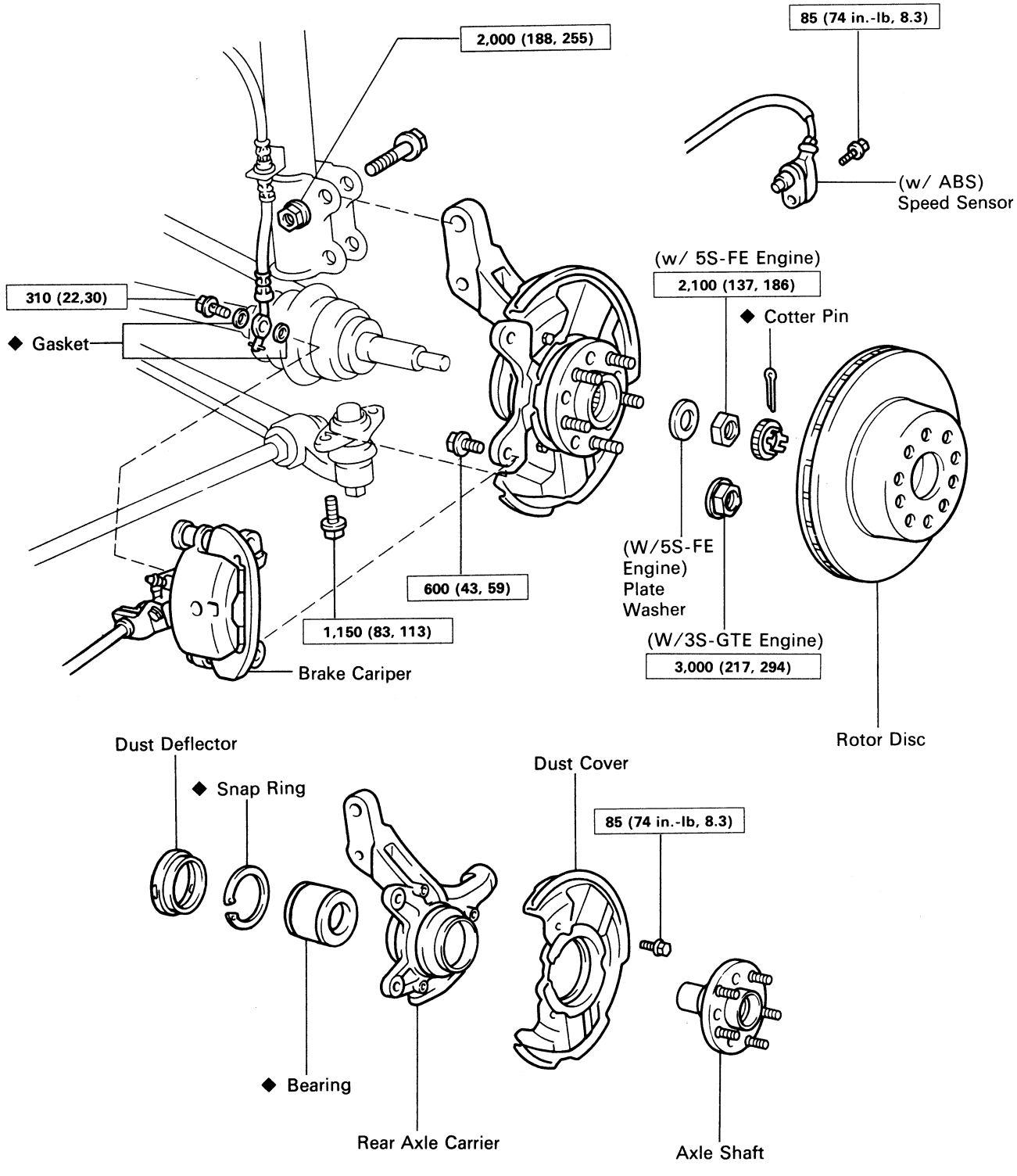

kg-cm (ft-lb, N·m) : Specified torque

◆ Non-reusable part

SA2832

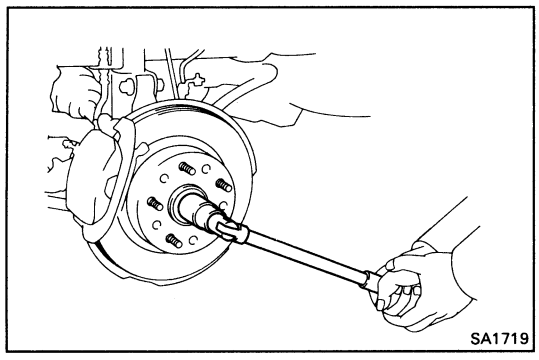
SA1719

REMOVAL OF REAR AXLE SHAFT AND CARRIER

(See page SA-31)

1. REMOVE COTTER PIN, BEARING LOCK NUT CAP AND BEARING LOCK NUT

(a) Remove the cotter pin and bearing lock nut cap.

(b) With the parking brake lever pulled, remove the bearing lock nut and plate washer.

(c) Release the parking brake lever.

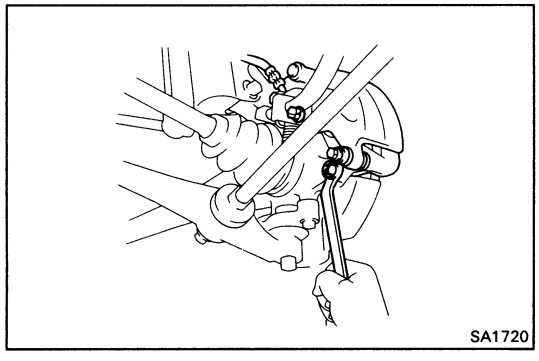
SA1720

2. REMOVE BRAKE CALIPER

Remove the brake caliper from the rear axle carrier and suspend it with wire.

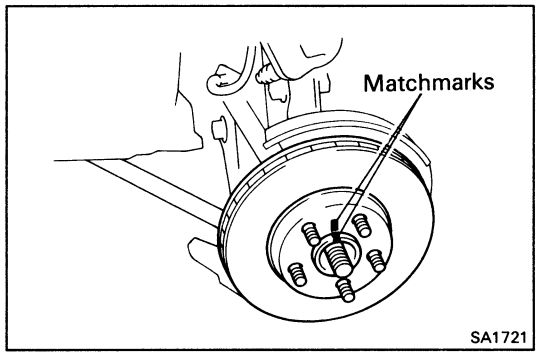

SA1721

3. REMOVE ROTOR DISC

HINT: Before removing the rotor disc, place the matchmarks on the axle shaft and rotor disc.

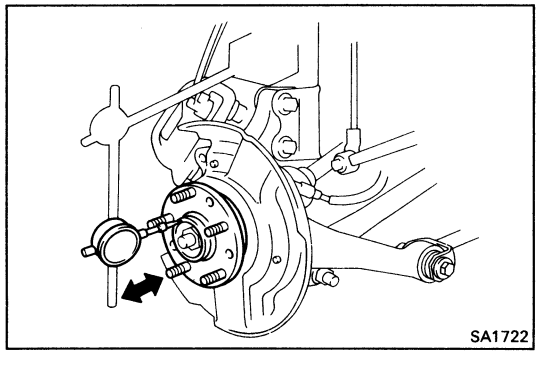
SA1722

4. CHECK BEARING PLAY IN AXIAL DIRECTION

Bearing play: 0.05 mm (0.0020 in.) or less

HINT: Measure the bearing play when install the Lock nut to the drive shaft.

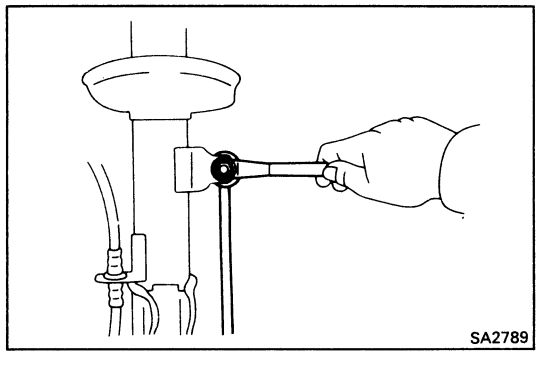
SA2789

5. DISCONNECT STABILIZER LINK

When disconnecting the stabilizer link.

HINT: If the ball joint stud turns together with the nut, use a hexagon wrench to hold the stud.

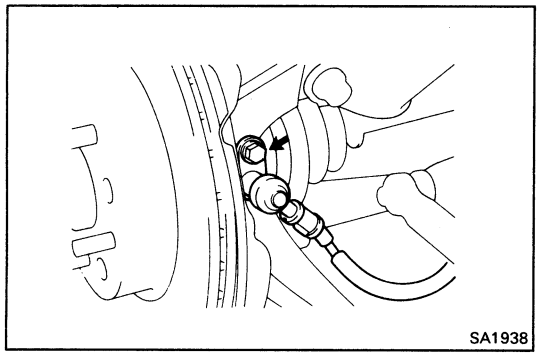

6. (w/ ABS)
REMOVE SPEED SENSOR FROM AXLE CARRIER

Remove the bolt and pull out the speed sensor.

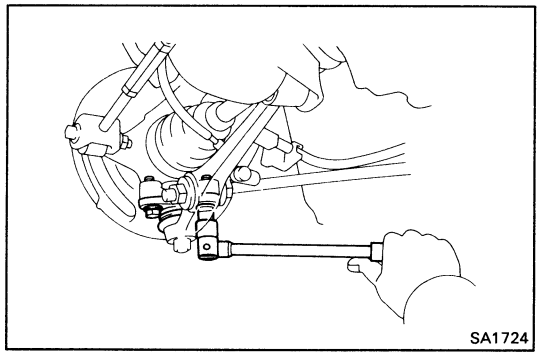

7. DISCONNECT BALL JOINT AND LOWER ARM

Remove the two bolts holding the ball joint to the rear axle carrier.

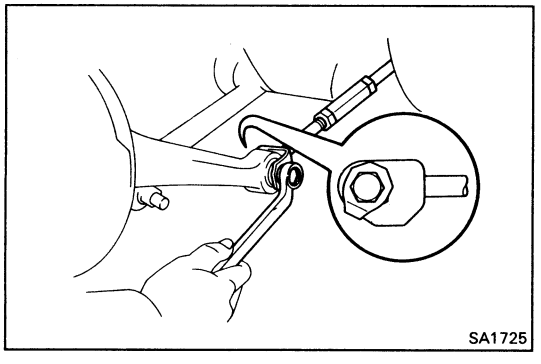

8. DISCONNECT SUSPENSION ARM

Remove the bolt and nut, then disconnect the suspension arm.

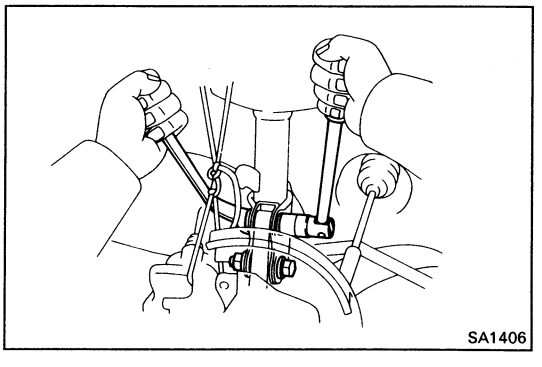

9. REMOVE REAR AXLE CARRIER WITH AXLE SHAFT

(a) Remove the two axle carrier set nuts and two bolts.

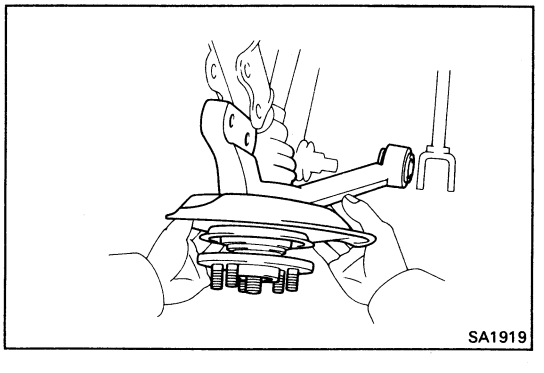

(b) Remove the rear axle carrier with axle shaft.

NOTICE: Cover the drive shaft boot with cloth to protect it from damage.

(w/ ABS)

NOTICE: Be careful not to damage the speed sensor rotor of the drive shaft.

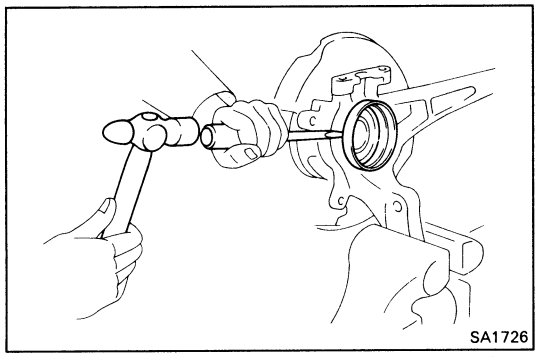
SA1726

DISASSEMBLY OF REAR AXLE SHAFT

(See page SA-31)

1. **REMOVE DUST DEFLECTOR**
   (a) Clamp the rear axle shaft and carrier in a soft jaw vise.
   (b) Using a screwdriver, remove the dust deflector.

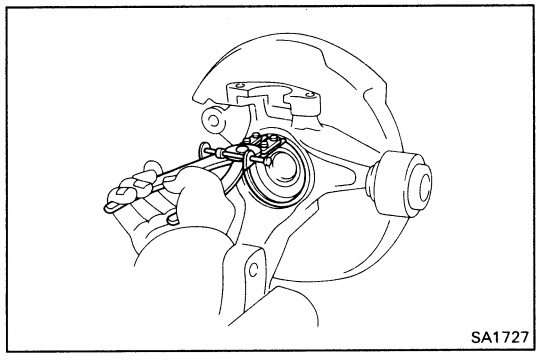
SA1727

2. **REMOVE HOLE SNAP RING**
   Using snap ring pliers, remove the hole snap ring.

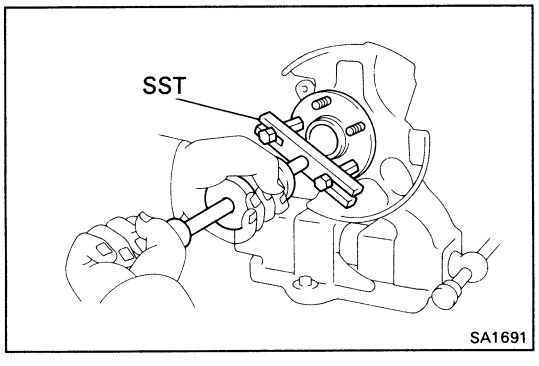

SA1691

3. **REMOVE AXLE SHAFT**
   (a) Remove the three bolts holding the disc brake dust cover to the rear axle carrier.
   (b) Using SST, remove the axle shaft from the rear axle carrier.
   SST 09520-00031
   (c) Remove the disc brake dust cover.

4. **REMOVE BEARING INNER RACE (INSIDE)**

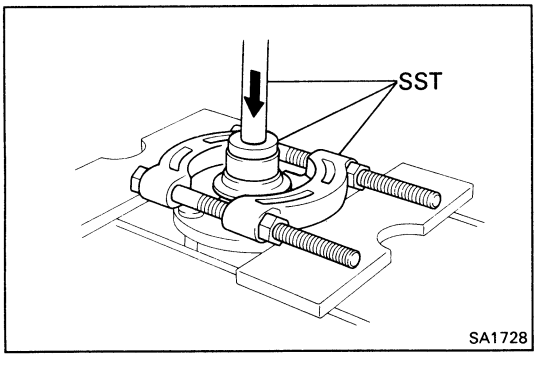

SA1728

5. **REMOVE BEARING INNER RACE (OUTSIDE)**
   Using SST, remove the inner race (outside) from the rear axle shaft.
   SST 09608-20012 (09608-00040, 09608-03020), 09950-00020

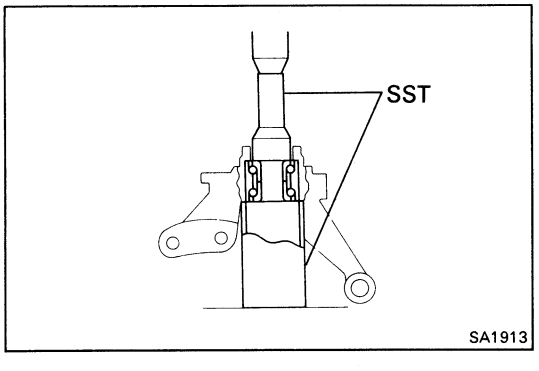

SA1913

6. **REMOVE AXLE BEARING**
   (a) First place the removed inner race (outside) in the bearing.
   (b) Using SST and a press, press out the bearing.
   SST 09310-35010, 09527-17010
   NOTICE: Always replace the bearing as an assembly.

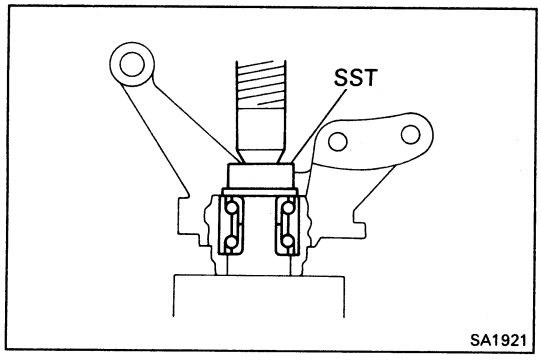

ASSEMBLY OF REAR AXLE SHAFT AND CARRIER

(See page SA-31)

1. INSTALL AXLE BEARING

Using SST and a press, press a new bearing into the rear axle carrier.

SST 09710-22041 (09710-02050)

HINT: Be careful not to damage the bearing.

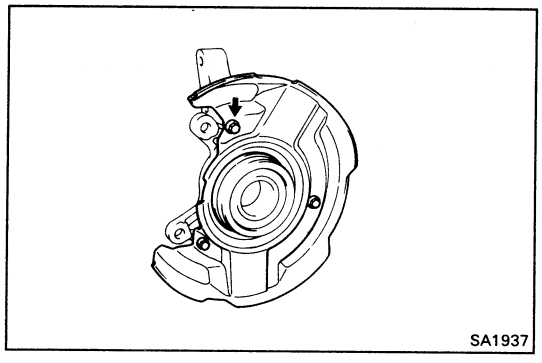

2. INSTALL DISC BRAKE DUST COVER

Install the disc brake dust cover with the three bolts.

Torque: 85 kg-cm (73 in.-lb, 8.3 N·m)

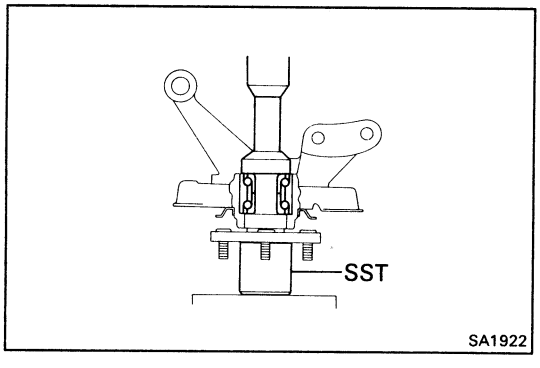

3. INSTALL AXLE SHAFT

Using SST and a press, press the shaft into the rear axle carrier.

SST 09310-35010, 09315-00021

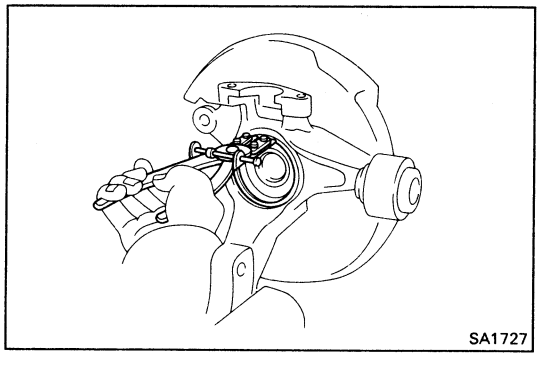

4. INSTALL HOLE SNAP RING

Using snap ring pliers, install a hole snap ring into the rear axle carrier.

HINT: Be careful not to damage the bearing.

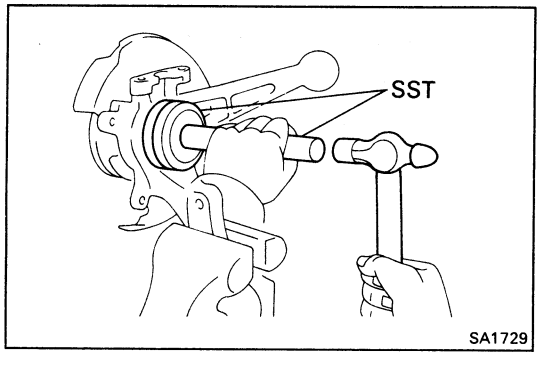

5. INSTALL DUST DEFLECTOR

Using SST, drive a new dust deflector to the rear axle carrier.

SST 09316-60010 (09316-00010, 09316-00040)

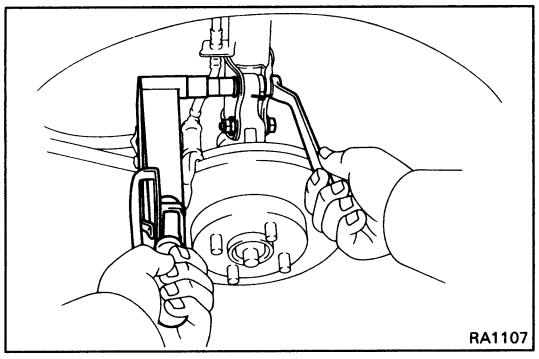
RA1107

INSTALLATION OF REAR AXLE SHAFT AND CARRIER

(See page SA-31)

1. **INSTALL REAR AXLE CARRIER WITH AXLE SHAFT**
   (a) Place the rear axle carrier to the shock absorber lower bracket.
   (b) Install the two set bolts and two nuts.
   (c) Torque the nuts.
   Torque: 2,600 kg-cm (188 ft-lb, 255 N·m)

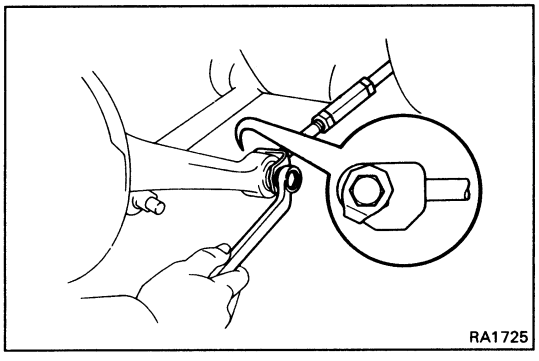
RA1725

2. **CONNECT SUSPENSION ARM**
   Install the suspension arm in place, then install and torque the bolt and nut.
   Torque: 1,050 kg-cm (76 ft-lb, 103 N·m)

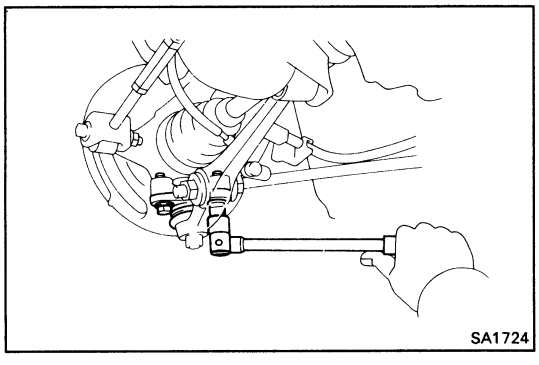
SA1724

3. **CONNECT REAR AXLE CARRIER TO LOWER ARM**
   Torque: 1,150 kg-cm (83 ft-lb, 113 N·m)

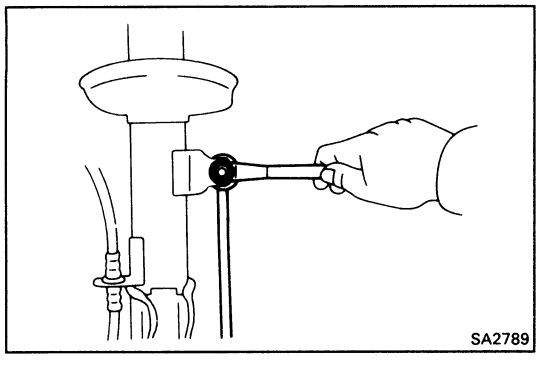
SA2789

4. **CONNECT STABILIZER LINK**
   Install and torque the nut.
   Torque: 500 kg-cm (36 ft-lb, 49 N·m)
   HINT: If the ball joint stud turns together with the nut, use a hexagon wrench to hold the stud.

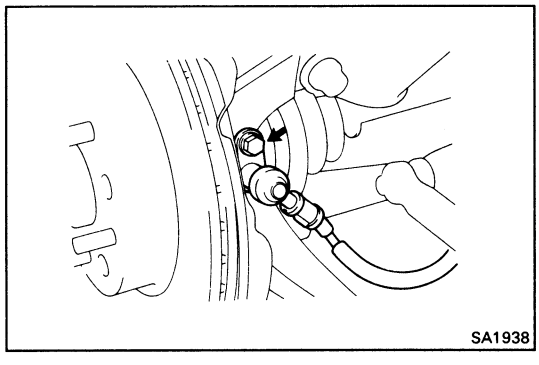
SA1938

5. **(w/ ABS)**
   INSTALL SPEED SENSOR TO AXLE CARRIER
   HINT: Before installing, check that there is no ferric chip or foreign material on the sensor tip.
   Torque: 80 kg-cm (69 in.-lb, 7.8 N·m)

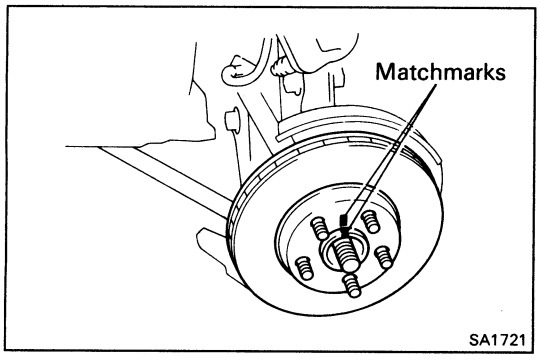

6. INSTALL ROTOR DISC

Align the matchmarks and install the rotor disc to the axle hub.

7. INSTALL BRAKE CALIPER

Torque: 600 kg-cm (43 ft-lb, 59 N·m)

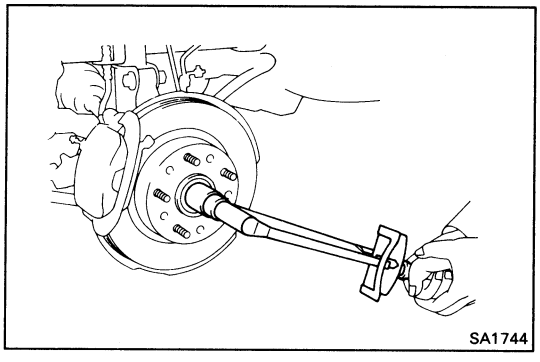

8. INSTALL PLATE WASHER, BEARING LOCK NUT, BEARING LOCK NUT CAP AND NEW COTTER PIN

(a) Install the plate washer and lock nut.

(b) With the parking brake engaged, and tighten the nut.

Torque:

5S-FE 2,100 kg-cm (152 ft-lb, 206 N·m)
3S-GTE 3,000 kg-cm (217 ft-lb, 294 N·m)

(c) Install the lock nut cap and a new cotter pin.

9. INSPECT REAR WHEEL ALIGNMENT
(See page SA-31)

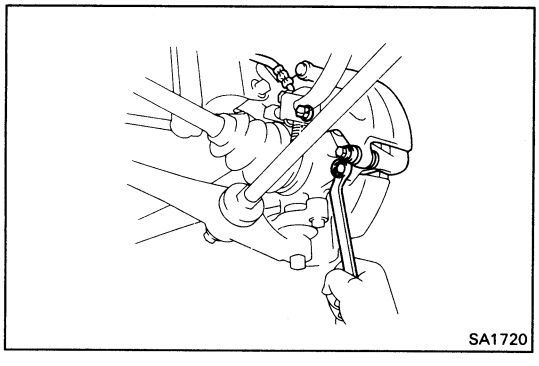

REPLACEMENT OF REAR AXLE SHAFT BOLT

(See page SA-31)

1. DISCONNECT BRAKE CALIPER FROM AXLE CARRIER

Disconnect the brake caliper from the axle carrier and suspend it with wire.

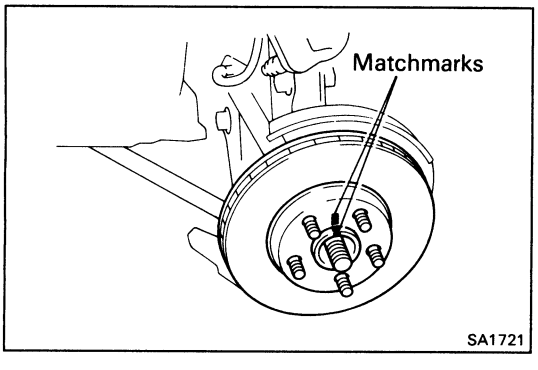

2. REMOVE ROTOR DISC

HINT: Before removing the rotor disc, place the matchmarks on the axle shaft and rotor disc.

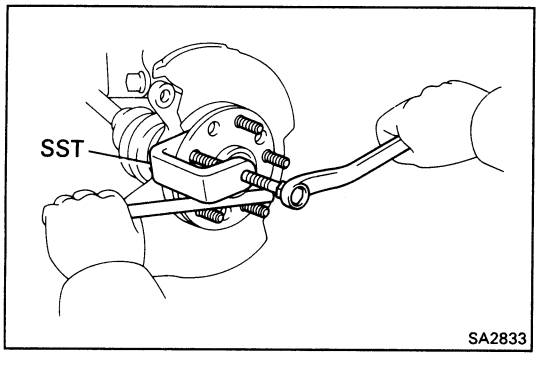

3. REMOVE REAR AXLE SHAFT BOLT

(a) Align the brake dust cover cut portion and axle shaft bolt.

(b) Using SST, remove the axle shaft bolt.

SST 09628-10011

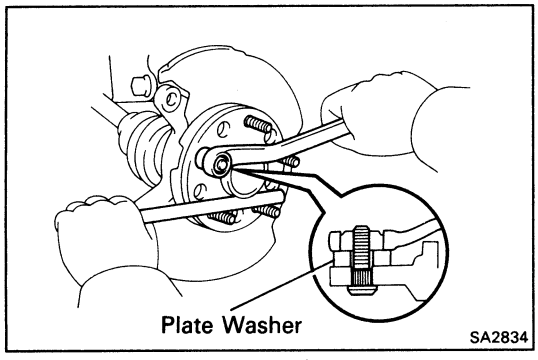

4. INSTALL REAR AXLE SHAFT BOLT

(a) Install a new bolt from the backing plate side.

(b) Install the suitable plate washer and nut.

(c) Tighten the nut, while holding the axle shaft.

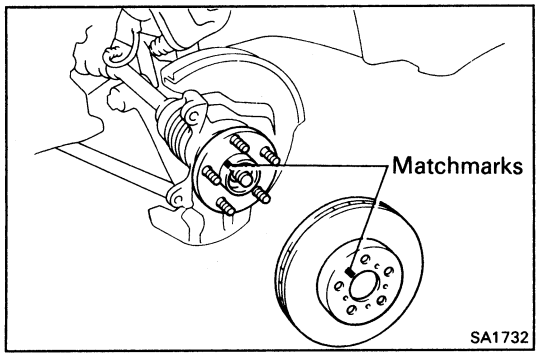

5. INSTALL ROTOR DISC

Align the matchmarks and install the rotor disc to the axle shaft.

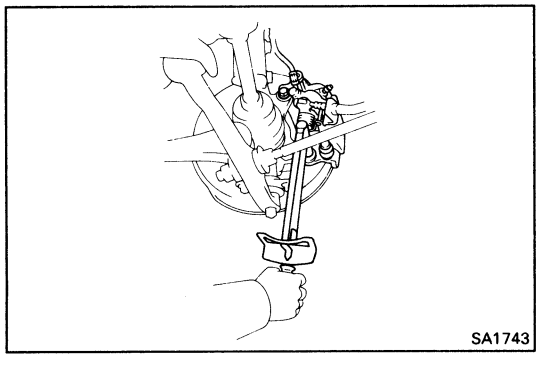

6. INSTALL DISC BRAKE CALIPER TO REAR AXLE CARRIER

Install and torque the two bolts.

Torque: 600 kg-cm (43 ft-lb, 59 N·m)

REAR DRIVE SHAFT (5S-FE ENGINE)

COMPONENTS

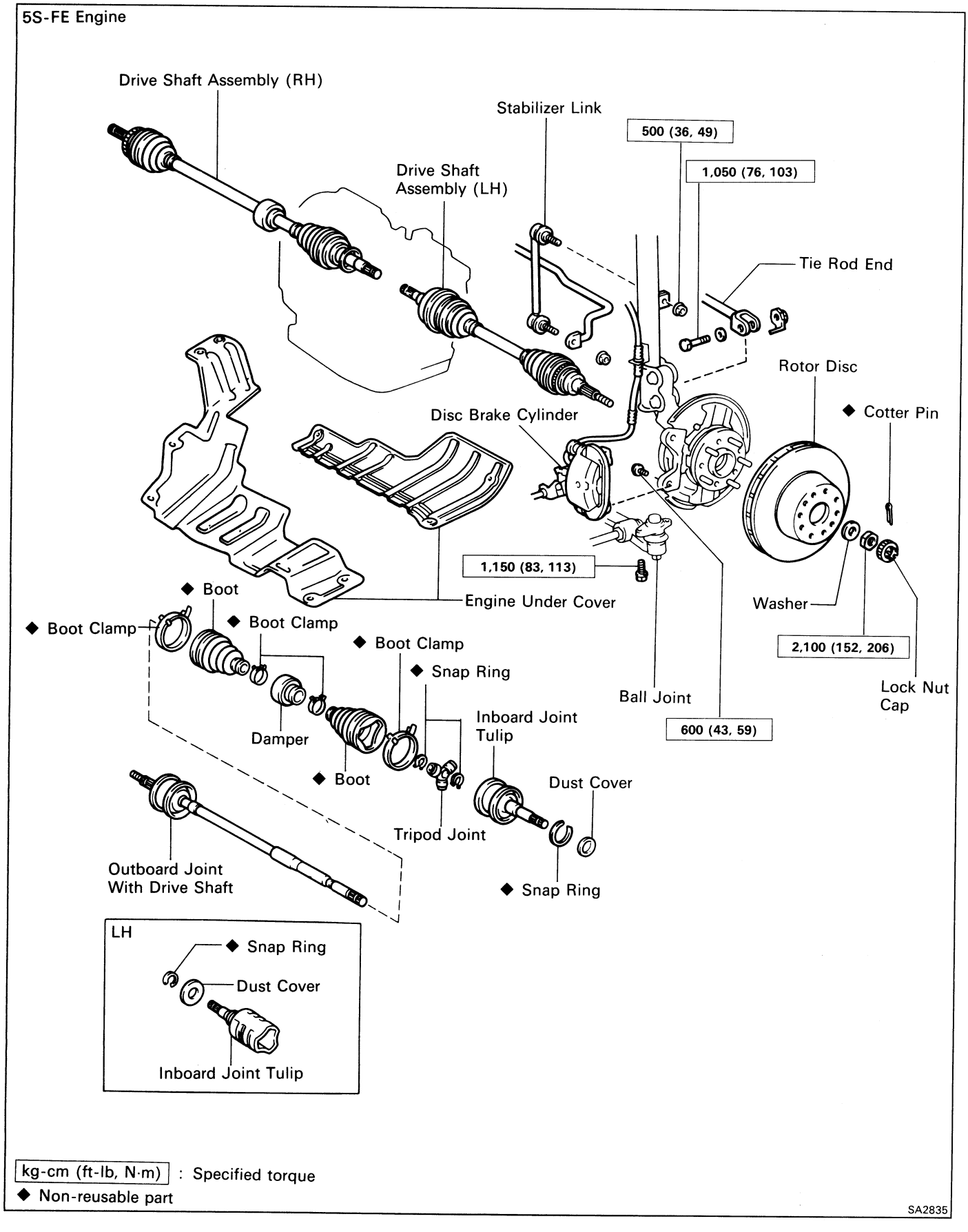

kg-cm (ft-lb, N·m) : Specified torque

◆ Non-reusable part

SA2835

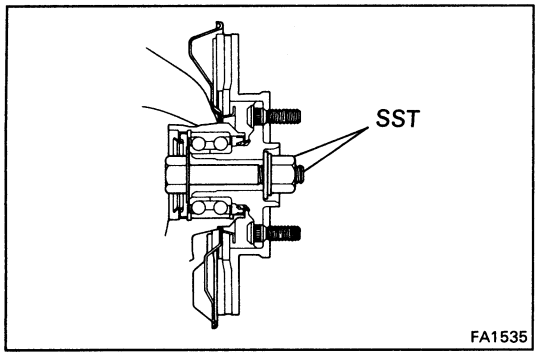

NOTICE:

- **The axle bearing could be damaged if it is subjected to the vehicle weight, such as when moving the vehicle with the drive shaft removed. Therefore, if it is absolutely necessary to place the vehicle weight on the axle bearing, first support it with SST.**

  SST 09608-16041 (09608-02020, 09608-02040)

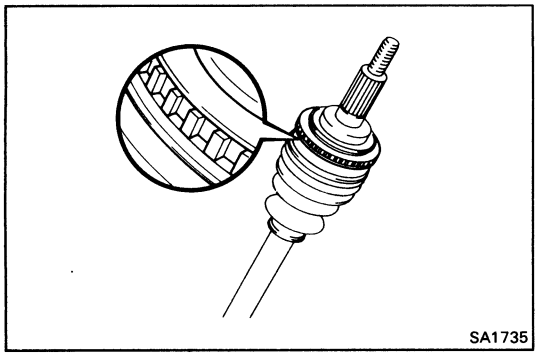

- **(w/ ABS)**
  After disconnecting the drive shaft from the axle hub, work carefully so as not to damage the sensor rotor serrations on the drive shaft.

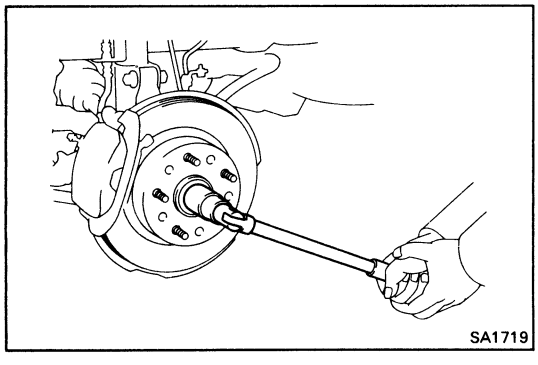

REMOVAL OF REAR DRIVE SHAFT

(See page SA-39)

1. **REMOVE ENGINE UNDER COVER**

2. **DRAIN TRANSAXLE OIL**

3. **REMOVE COTTER PIN, LOCK NUT CAP AND BEARING LOCK NUT**

   (a) Remove the cotter pin and lock nut cap.

   (b) With the parking brake engaged, remove the bearing lock nut.

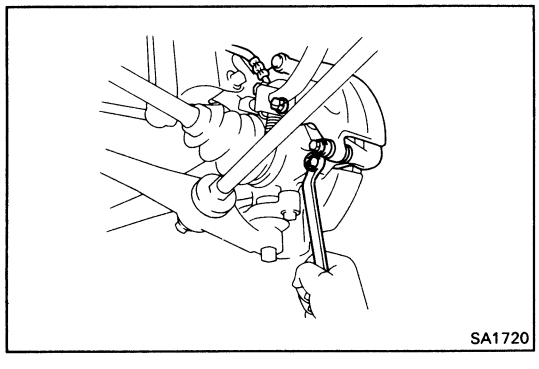

4. **REMOVE BRAKE CALIPER**

   Remove the brake caliper from the axle carrier and suspend it with wire.

5. **REMOVE ROTOR DISC**

   HINT: Before removing the rotor disc, place the matchmarks on the axle shaft and rotor disc.

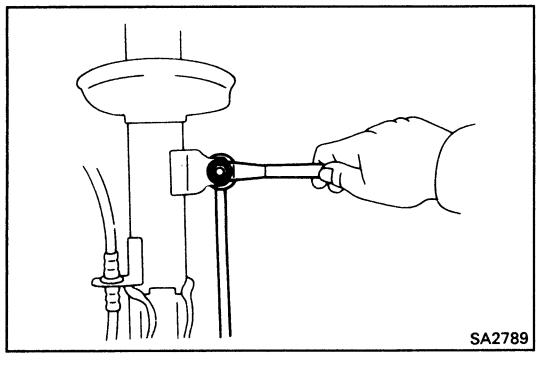

6. **DISCONNECT STABILIZER LINK**

   Remove the upper side nut from the stabilizer link.

   HINT: If the ball joint stud turns together with the nut, use a hexagon wrench 5 mm (0.197 in.) to hold the stud.

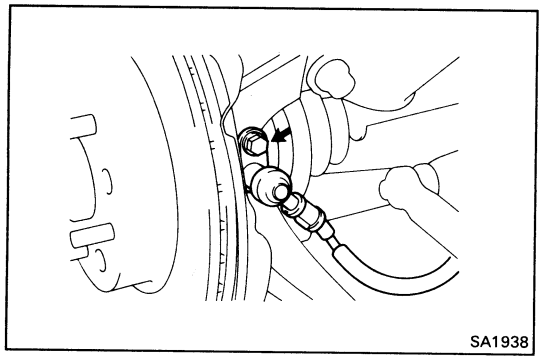

7. **(w/ ABS)**
REMOVE SPEED SENSOR FROM AXLE CARRIER

Remove the bolt and pull out the speed sensor.

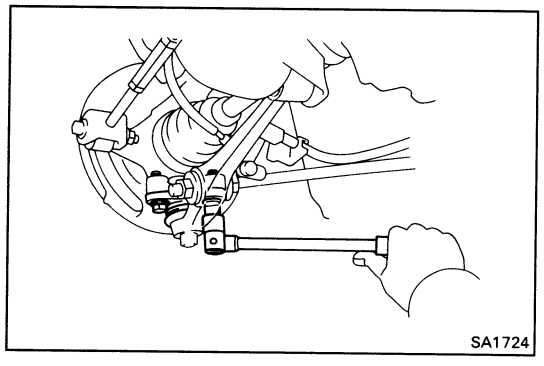

8. **DISCONNECT LOWER ARM FROM REAR AXLE CARRIER**

(a) Remove the two bolts holding the ball joint to the lower arm.

(b) Disconnect the lower arm.

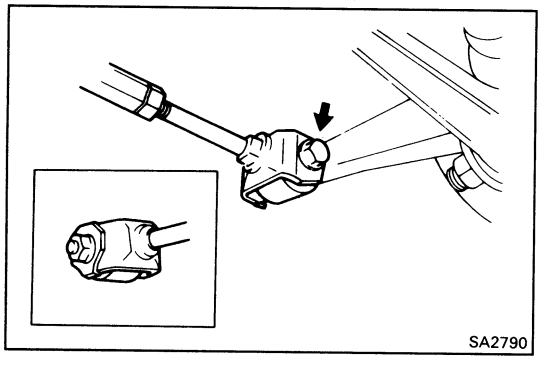

9. **DISCONNECT TIE ROD END**

(a) Remove the tie rod end mounting bolt and nut, disconnect the tie rod end from the rear axle carrier.

(b) Similarly disconnect the other side.

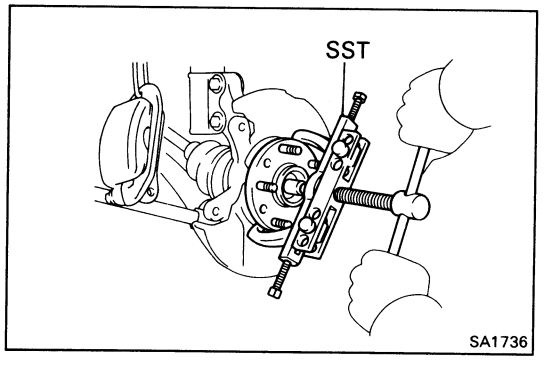

10. **DISCONNECT DRIVE SHAFT FROM AXLE CARRIER**

Using SST, disconnect the drive shaft from the axle carrier.

SST 09950-20017

NOTICE:

- **Cover the drive shaft boot with cloth to protect it from damage.**
- **(w/ ABS)**
  Be careful not to damage the sensor rotor of the drive shaft

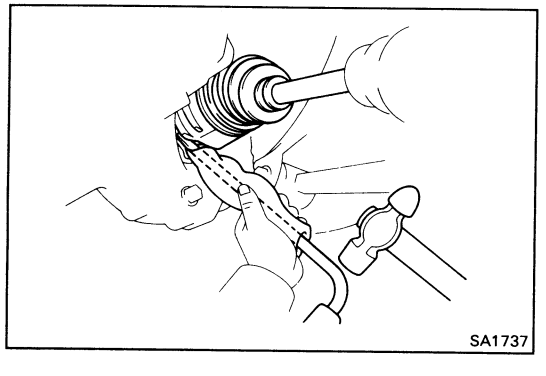

11. **REMOVE LH DRIVE SHAFT**

Using a hammer and hub nut wrench or an equivalent, remove the LH drive shaft.

NOTICE:

- **Be careful not to damage the dust cover.**
- **Cover the hub nut wrench or an equivalent with cloth so as not to damage the transaxle body.**

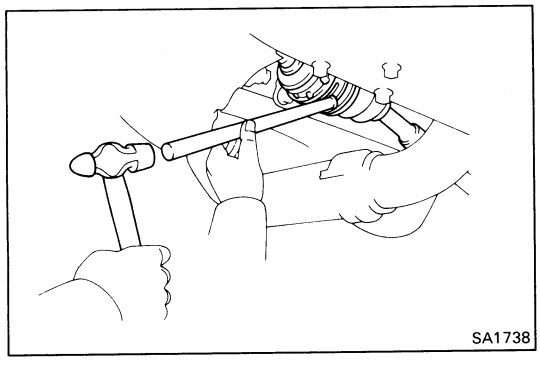

12. REMOVE RH DRIVE SHAFT

Using a hammer and brass bar, drive out the RH drive shaft.

REPLACEMENT OF OIL SEAL

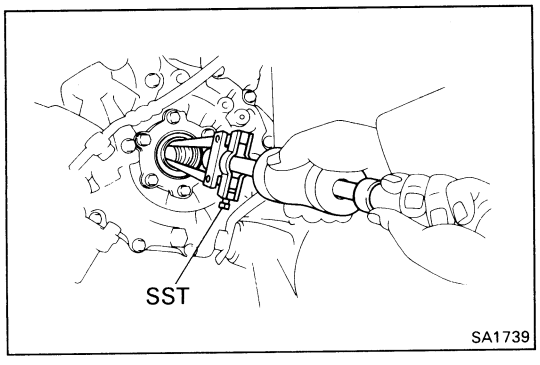

1. REMOVE OIL SEAL

Using SST, drive out the oil seal.

SST 09308-00010

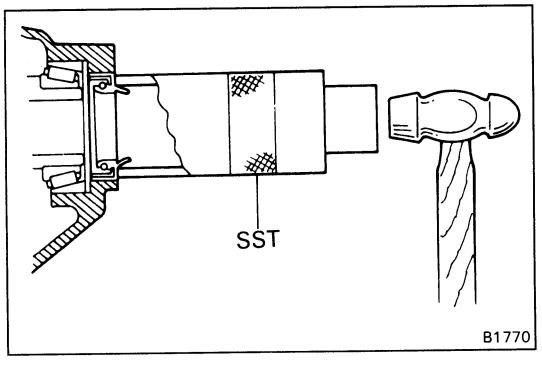

2. INSTALL NEW OIL SEAL

(a) (M/T)
Using SST and hammer, tap in a new oil seal.

SST 09316-60010 (09316-00010)

HINT: Coat the oil seal lip with MP grease.

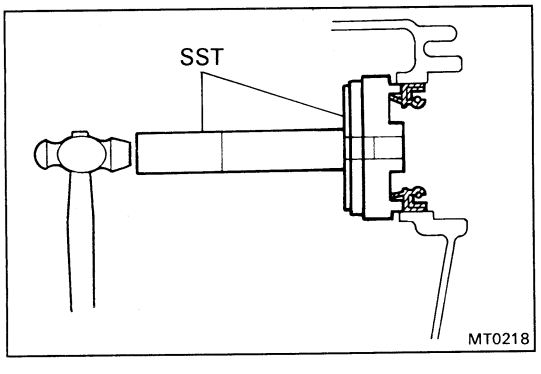

(b) (A/T LH)
Using SST and hammer, tap in a new LH oil seal.

SST 09350-32014 (09351-32111, 09351-32150)

HINT: Coat the oil seal lip with MP grease.

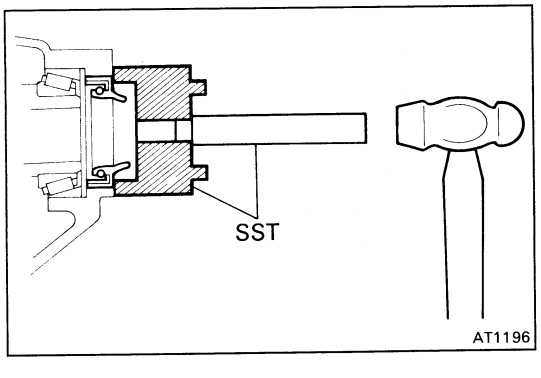

(c) (A/T RH)
Using SST and hammer, tap in a new RH oil seal.

SST 09350-32014 (09351-32130, 09351-32150)

HINT: Coat the oil seal lip with MP grease.

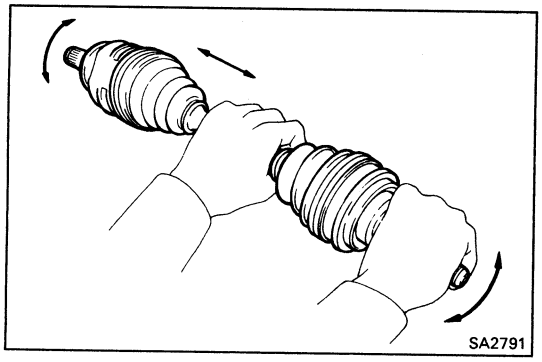
SA2791

DISASSEMBLY OF REAR DRIVE SHAFT

(See page SA-39)

1. CHECK DRIVE SHAFT
   (a) Check to see that there is no play in the outboard joint.
   (b) Check to see that the inboard joint slides smoothly in the thrust direction.
   (c) Check to see that there is no remarkable play in the radial direction of the inboard joint.
   (d) Check for damage to boots.

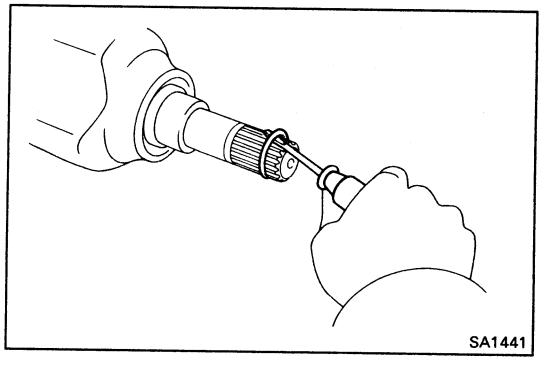
SA1441

2. REMOVE SNAP RING FROM INBOARD JOINT SHAFT
   Using a screwdriver, pry out the snap ring.

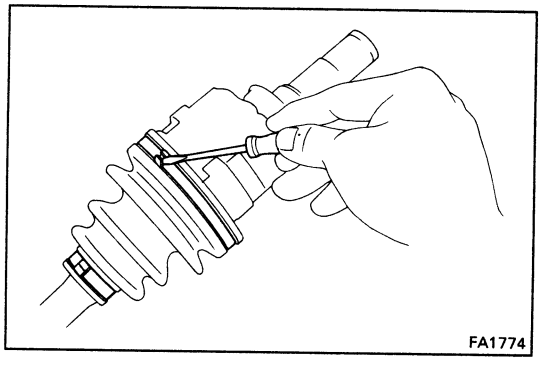
FA1774

3. REMOVE INBOARD JOINT BOOT CLAMPS
   (a) Using a screwdriver, remove the two boot clamps.
   (b) Slide the inboard joint boot toward the outboard joint.

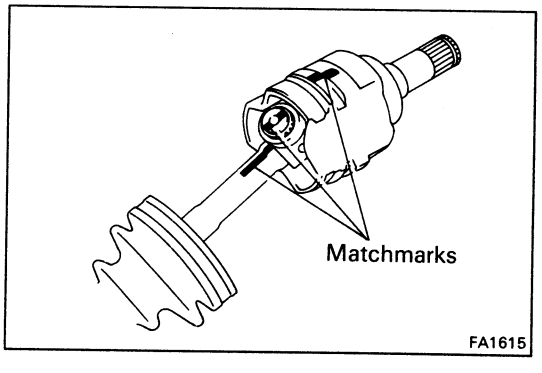

FA1615

4. DISASSEMBLE INBOARD JOINT
   (a) Place matchmarks on the inboard joint tulip and tripod.

   NOTICE: Do not punch the marks.

   (b) Remove the inboard joint tulip from the drive shaft.

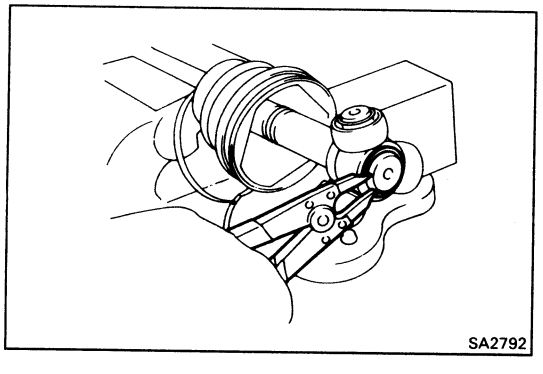
SA2792

5. DISASSEMBLE TRIPOD JOINT
   (a) Using snap ring pliers, remove the snap ring.

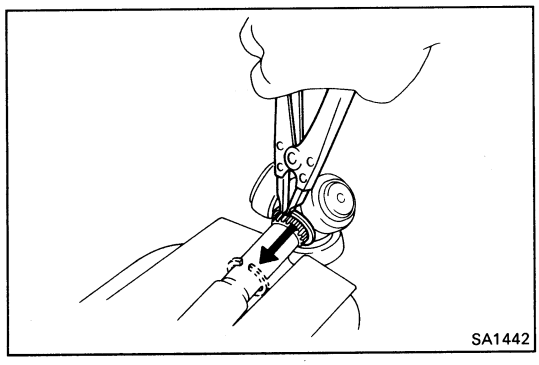

(b) Using snap ring pliers, temporarily slide the snap ring toward the outboard joint side.

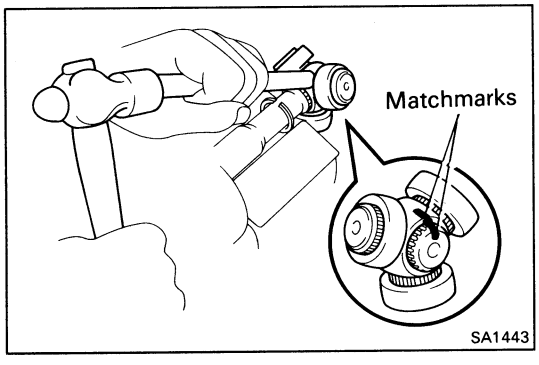

(c) Place the matchmarks on the drive shaft and tripod.

NOTICE: Do not punch the marks.

(d) Using a brass bar and a hammer, remove the tripod joint from the drive shaft.

NOTICE: Do not tap the roller.

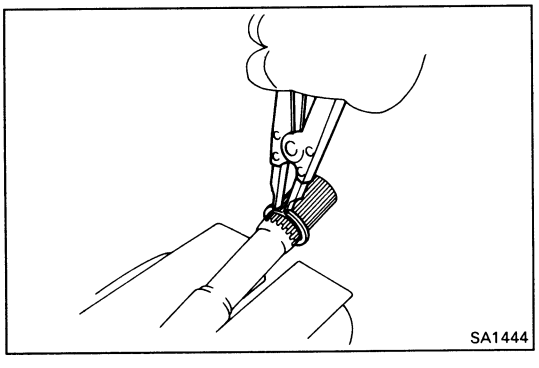

(e) Using snap ring pliers, remove the snap ring.

6. REMOVE INBOARD JOINT BOOT

Slide out the inboard joint boot.

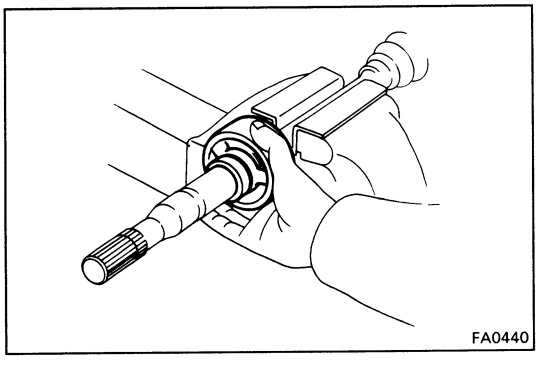

7. REMOVE DAMPER

(a) Using a screwdriver, remove the damper clamp.

(b) Slide out the damper.

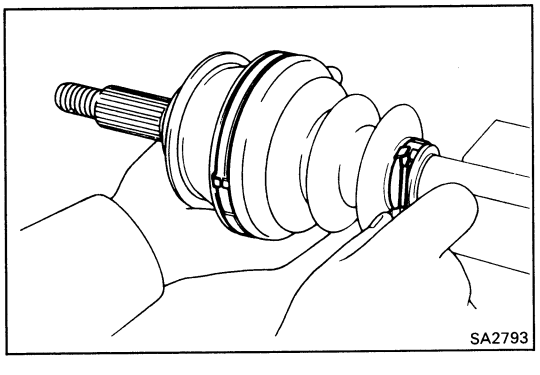

8. REMOVE OUTBOARD JOINT BOOT CLAMPS AND BOOT

(a) Using a screwdriver, remove the two boot clamps of the outboard joint boot.

(b) Slide out the boot from the outboard joint.

NOTICE: Do not disassemble the outboard joint.

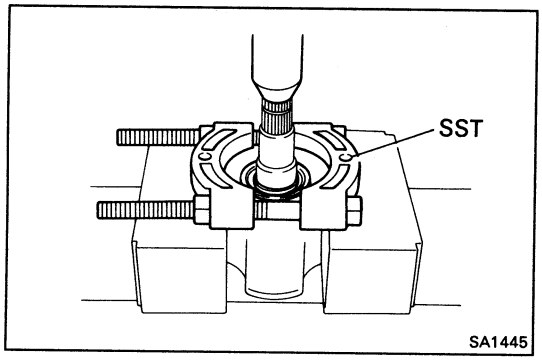

9. REMOVE DUST COVER

(a) (LH Drive Shaft)
Using SST and press, press out the dust cover from the inboard joint tulip.

SST 09950-00020

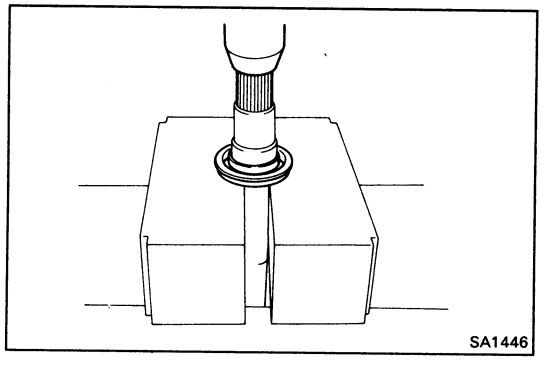

(b) (RH Drive Shaft)
Using a press, press out the dust cover.

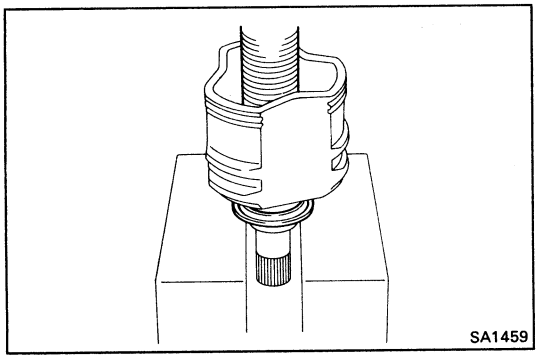

ASSEMBLY OF REAR DRIVE SHAFT

(See page SA-39)

1. INSTALL DUST COVER

Using a press, press into the dust cover.

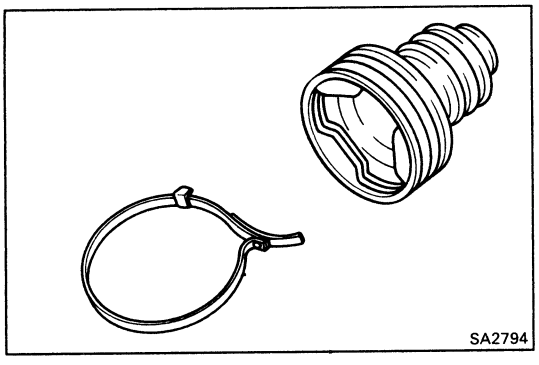

2. TEMPORARILY INSTALL OUTBOARD JOINT BOOT AND NEW BOOT CLAMPS

Temporarily install the boot and two new boot clamps for the outboard joint to the drive shaft.

HINT: Before installing the boot, wrap vinyl tape around the spline of the drive shaft to prevent damaging the boot.

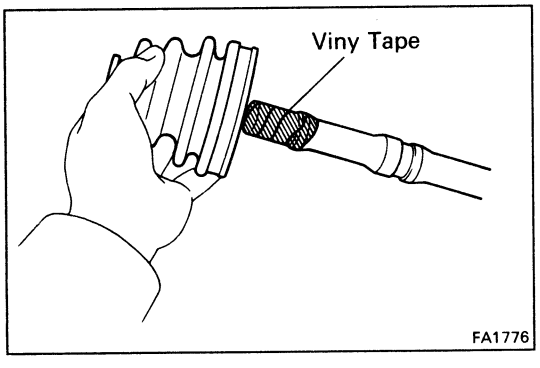

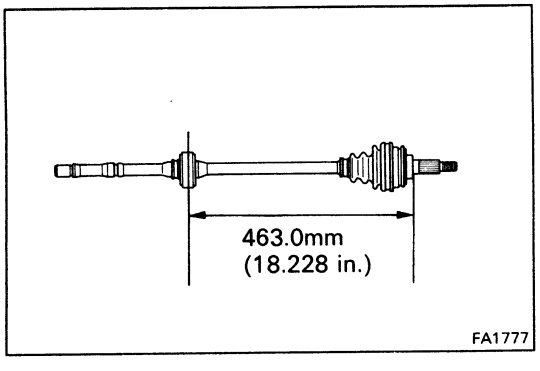

3. TEMPORARILY INSTALL DAMPER AND NEW DAMPER CLAMP

HINT: Fix the clamp position in line with the groove of the drive shaft.

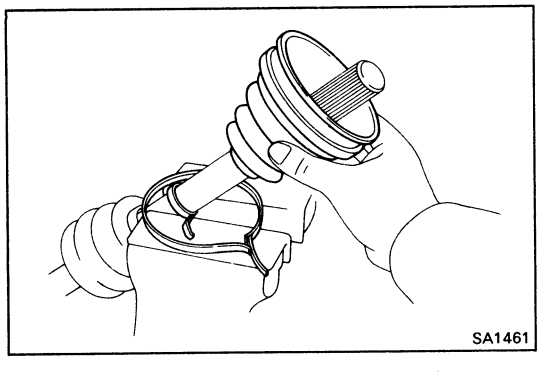

4. TEMPORARILY INSTALL INBOARD JOINT BOOT AND NEW BOOT CLAMPS

Temporarily install the boot and two new boot clamps for the inboard joint to the drive shaft.

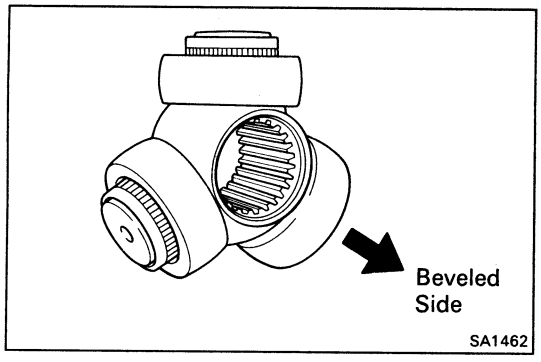

5. ASSEMBLE TRIPOD JOINT

(a) Place the beveled side of the tripod axial spline toward outboard joint.

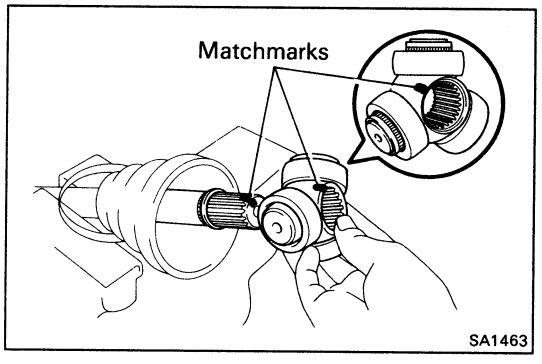

(b) Align the matchmarks placed before disassembly.

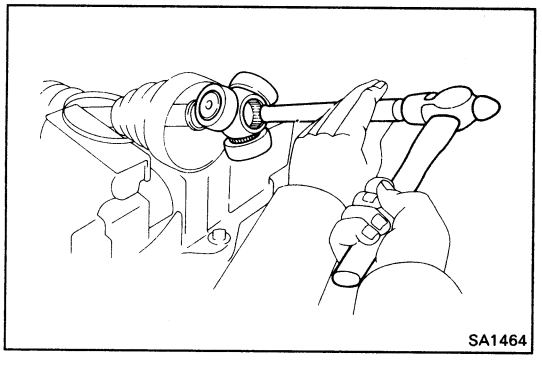

(c) Using a brass bar and hammer, tap in the tripod joint to the drive shaft.

NOTICE: Do not tap the roller.

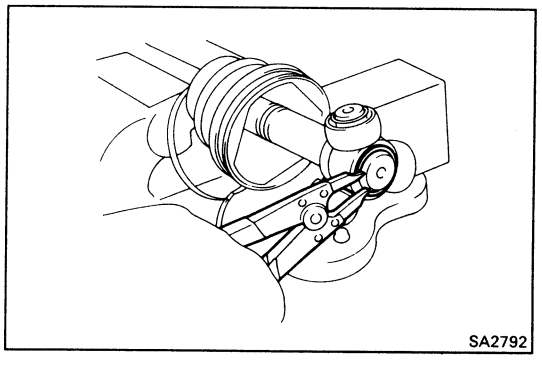

(d) Using snap ring pliers, install a new snap ring.

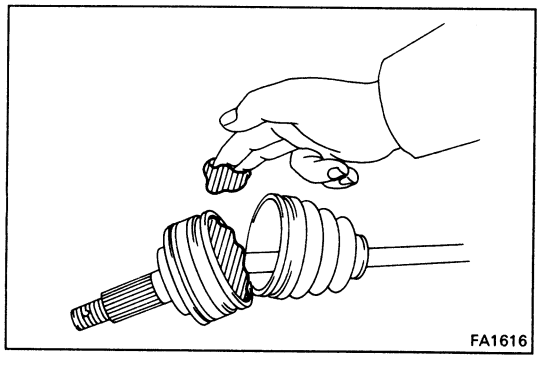

6. INSTALL BOOT TO OUTBOARD JOINT

Before assembling the boot, fill grease into the outboard joint and boot.

HINT: Use the grease supplier in the boot kit.

Grease capacity: 120 – 130 g (0.26 – 0.29 lb)
Grease color: Black

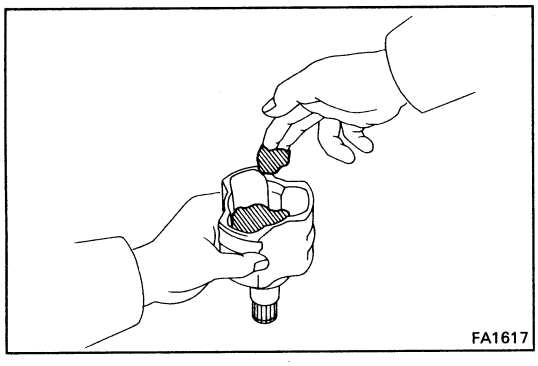
FA1617

7. INSTALL INBOARD JOINT TULIP TO REAR DRIVE SHAFT

(a) Pack in the grease to the boot and inboard joint tulip.

HINT: Use the grease supplied in the boot kit.

Grease capacity: 232 – 242 g (0.51 – 0.53 lb)
Grease color: Yellow ocher

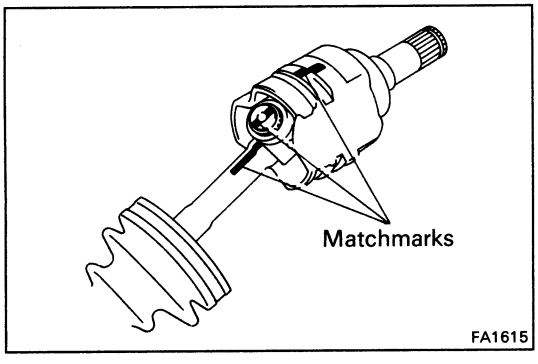

FA1615

(b) Align the matchmarks placed before remove, and install the inboard joint tulip to the drive shaft.

(c) Install the boot to the inboard joint tulip.

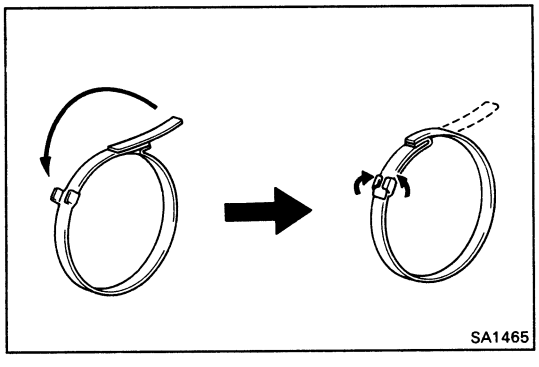
SA1465

8. ASSEMBLE BOOT CLAMPS AND DAMPER CLAMP

(a) Be sure the boot is on the shaft groove.

(b) Using a screwdriver, bend the clamp and lock it as shown.

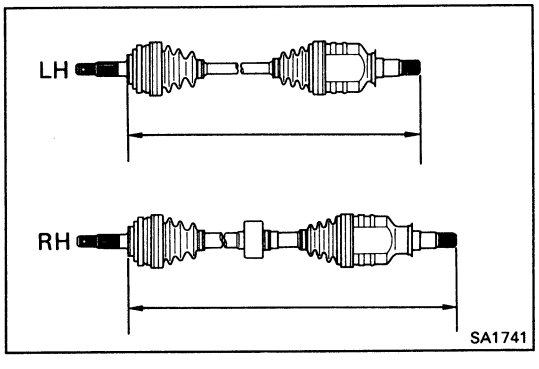

SA1741

(c) Insure that the boot is not stretched or contracted when the drive shaft is at standard length.

Drive shaft standard length:
LH 540.3 ± 5.0 mm (21.272 ± 0.197 in.)
RH 831.4 ± 5.0 mm (32.732 ± 0.197 in.)

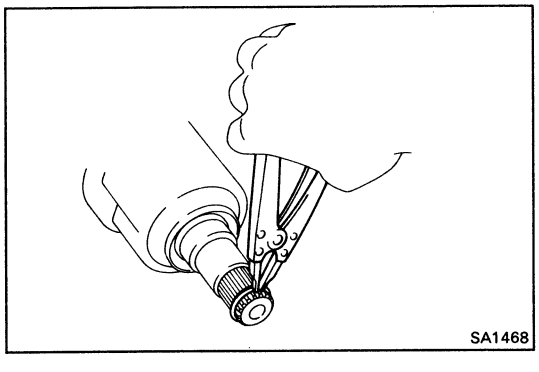
SA1468

(d) Using snap ring pliers, install a new snap ring.

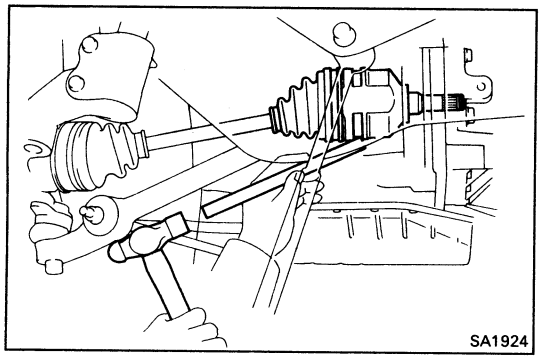
SA1924

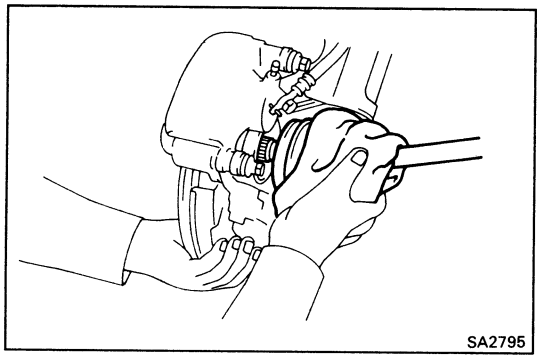
SA2795

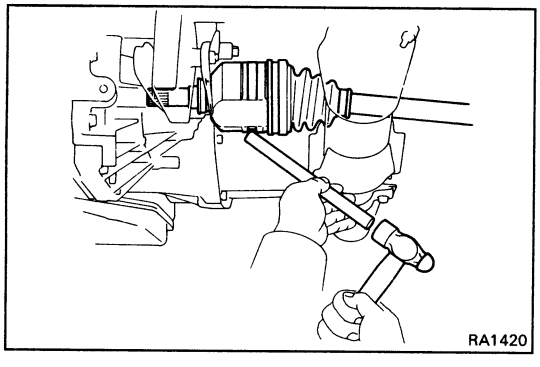
RA1420

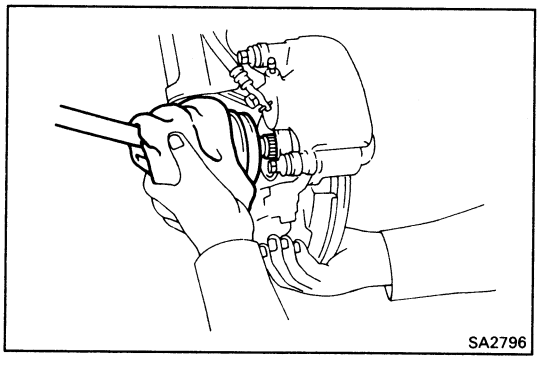
SA2796

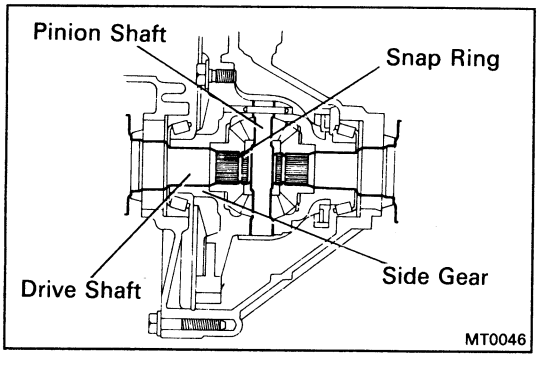

INSTALL OF REAR DRIVE SHAFT

(See page SA-39)

1. INSTALL LH DRIVE SHAFT

(a) Coat the oil seal lip with MP grease.

(b) Using a brass bar and hammer, drive in the drive shaft until it makes contact with the pinion shaft.

NOTICE: Be careful not to damage the boots.

HINT:

- Before installing the drive shaft, set the snap ring opening side facing downward.
- Whether or not the drive shaft is making contact with the pinion shaft can be known by sound or feeling when driving it in.

(c) Install the outboard joint side of the drive shaft to the axle shaft.

NOTICE:

- **Be careful not to damage the boots.**
- **(w/ ABS)**
  Be careful not to damage the speed sensor rotor of the drive shaft.

2. INSTALL RH DRIVE SHAFT

(a) Coat the oil seal lip with MP grease.

(b) Using a brass bar and hammer, drive in the drive shaft until it makes contact with the pinion shaft.

NOTICE: Be careful not to damage the boots.

HINT:

- Before installing the drive shaft, set the snap ring opening side facing downward.
- Whether or not the drive shaft is making contact with the pinion shaft can be known by sound or feeling when driving it in.

(c) Install the outboard joint side of the drive shaft to the axle shaft.

NOTICE:

- **Be careful not to damage the boots.**
- **(w/ ABS)**
  Be careful not to damage the speed sensor rotor of the drive shaft.

3. CHECK INSTALLATION OF REAR DRIVE SHAFT

(a) Check that there is 2 – 3 mm (0.08 – 0.12 in.) of play in axial direction.

(b) Check that the drive shaft will not come out by trying to pull it completely out by hand.

HINT: When checking pull the inboard joint so as not to damage the boots.

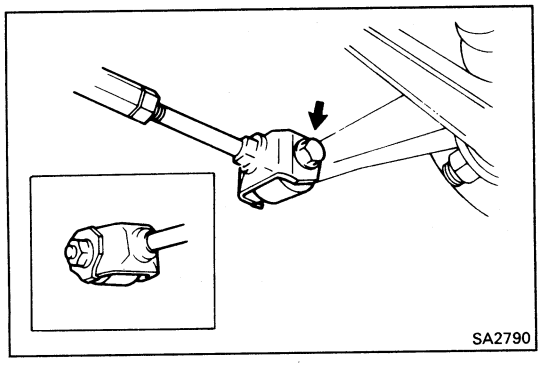

4. CONNECT TIE ROD END

Temporarily connect the tie rod end to rear axle carrier with the bolt and nut.

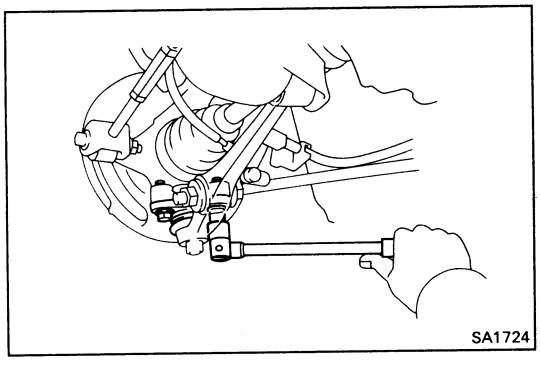

5. CONNECT BALL JOINT TO AXLE CARRIER

(a) Connect the ball joint to the axle shaft.

(b) Install and torque the two bolts.

Torque: 1,150 kg-cm (83 ft-lb, 113 N·m)

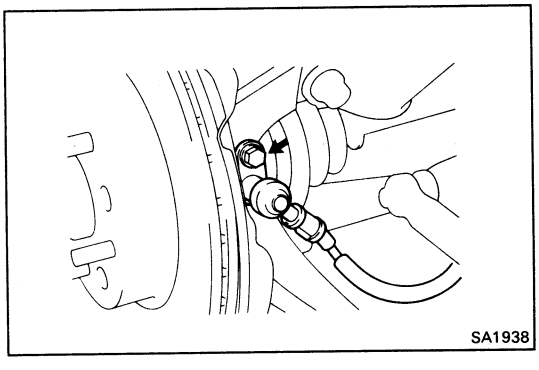

6. (w/ ABS)
INSTALL SPEED SENSOR TO AXLE CARRIER

Torque: 80 kg-cm (69 in.-lb, 7.4 N·m)

HINT: Before installing, check that there is no ferric clip or foreign material on the sensor tip.

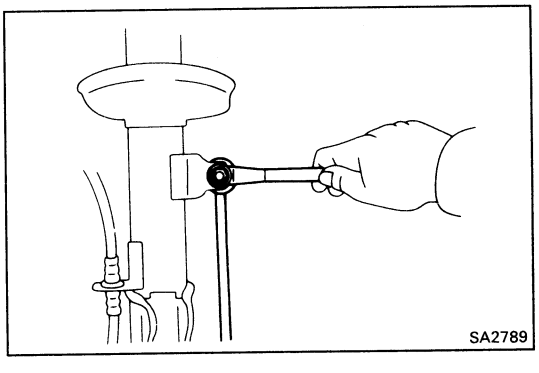

7. CONNECT STABILIZER LINK

Connect the upper side nut to the stabilizer link.

Torque: 500 kg-cm (36 ft-lb, 49 N·m)

HINT: If the ball joint stud turns together with the nut, use a hexagon wrench 5 mm (0.197 in.) to hold the stud.

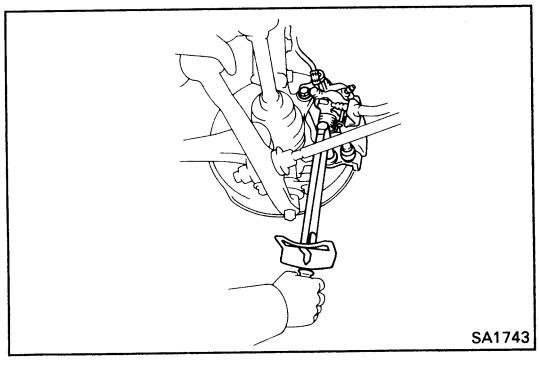

8. INSTALL ROTOR DISC TO AXLE CARRIER

HINT: Before removing the rotor disc, place the match-marks on the axle shaft and rotor disc.

9. INSTALL BRAKE CALIPER AXLE CARRIER

Torque the two bolts.

Torque: 600 kg-cm (43 ft-lb, 59 N·m)

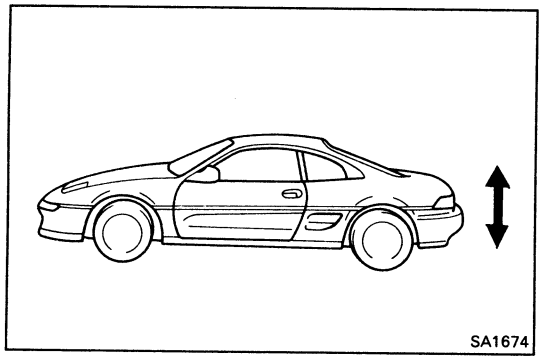
SA1674

10. INSTALL WHEEL AND LOWER VEHICLE

Rock the vehicle up and down to stabilize the suspension.

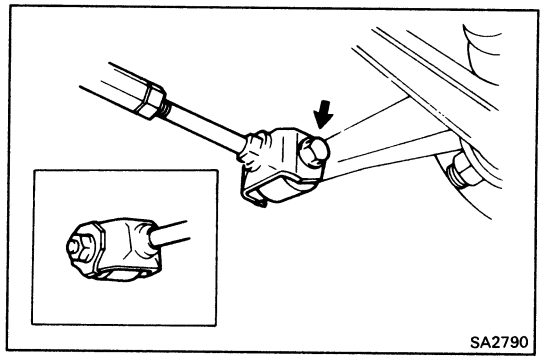
SA2790

11. TORQUE BOLT AND NUT

Torque the tie rod end mount bolt and nut.

Torque: 1,050 kg-cm (76 ft-lb, 103 N·m)

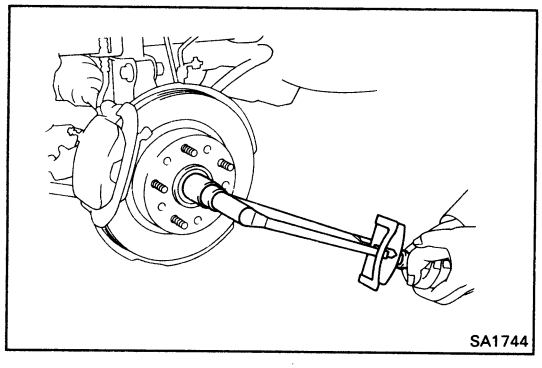
SA1744

12. INSTALL BEARING LOCK NUT, LOCK NUT CAP AND COTTER PIN

(a) Install the washer and lock nut.

(b) With the parking brake engaged, and tighten the nut.

Torque: 2,100 kg-cm (152 ft-lb, 206 N·m)

(c) Install the lock cap, and using pliers, install a new cotter pin.

13. FILL TRANSAXLE WITH GEAR OIL

Fluid type: ATF DEXRON II

14. INSTALL ENGINE UNDER COVER

REAR DRIVE SHAFT (3S-GTE ENGINE)

COMPONENTS

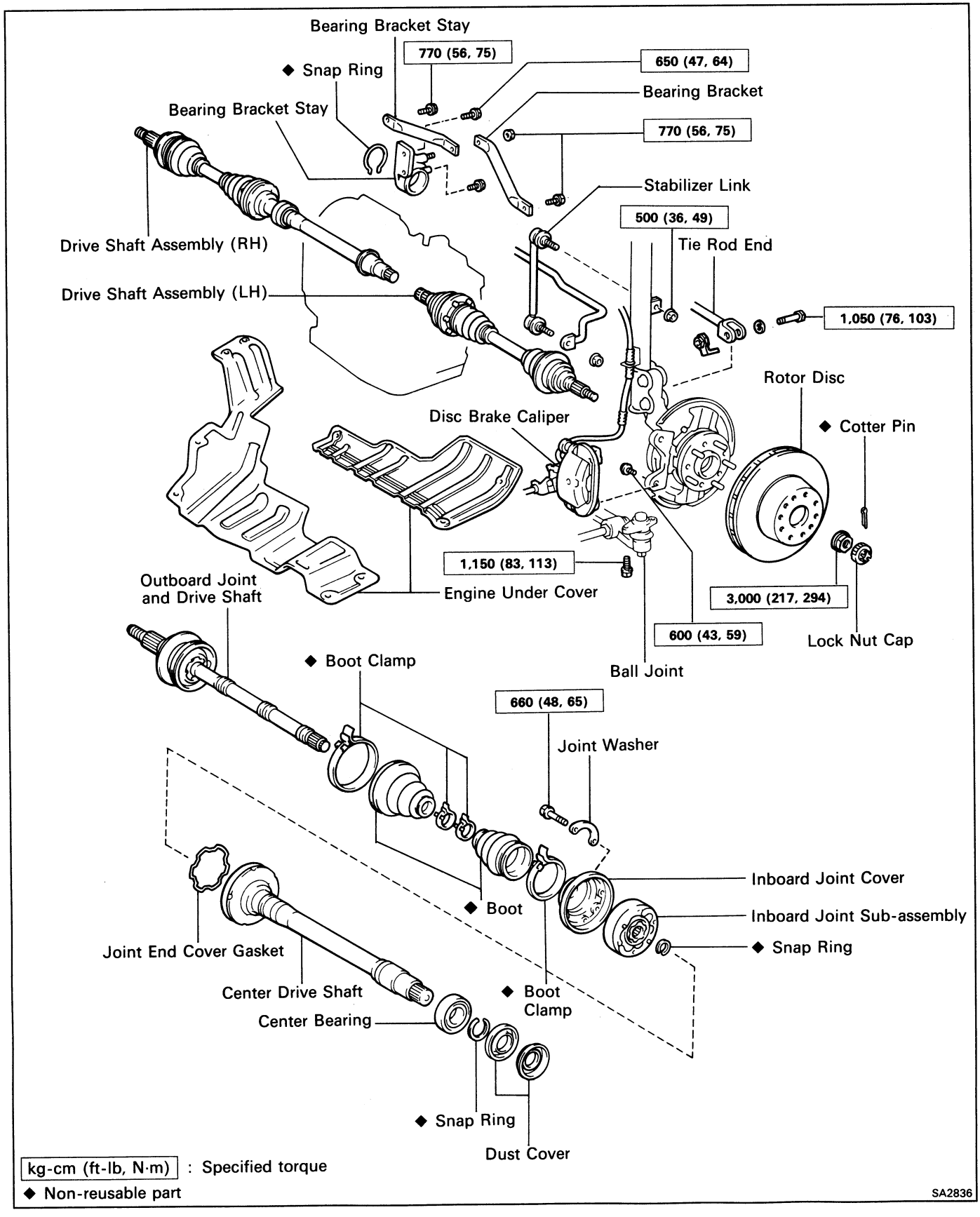

kg-cm (ft-lb, N·m) : Specified torque

◆ Non-reusable part

SA2836

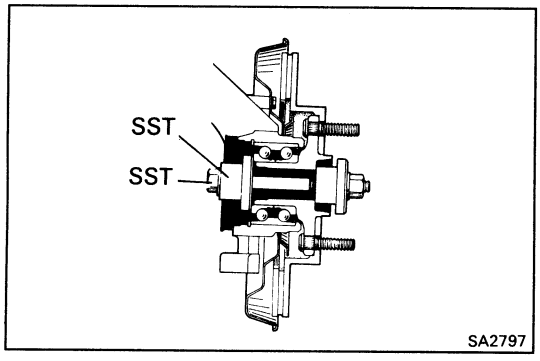

NOTICE:

- **The axle bearing could be damaged if it is subjected to the vehicle weight, such as when moving the vehicle with the drive shaft removed. Therefore, if it is absolutely necessary to place the vehicle weight on the axle bearing, first support it with SST.**

SST 09570-22010, 09608-16041 (09608-02010)

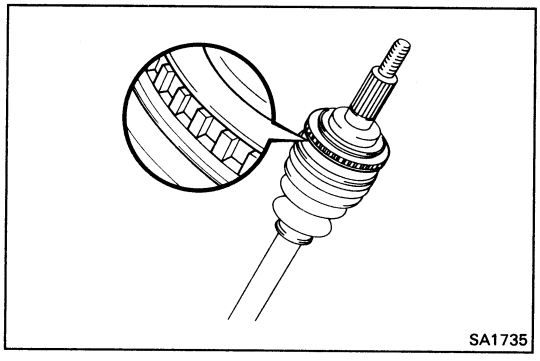

- **(w/ ABS)**
  After disconnecting the drive shaft from the axle hub, work carefully so as not to damage the sensor rotor serrations on the drive shaft.

REMOVAL OF REAR DRIVE SHAFT

(See page SA-52)

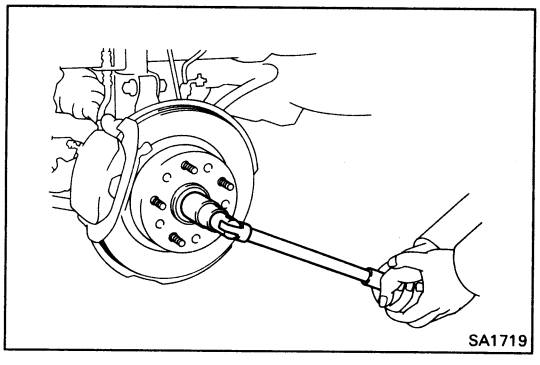

1. **REMOVE ENGINE UNDER COVER**

2. **DRAIN TRANSAXLE OIL**

3. **REMOVE COTTER PIN, LOCK NUT CAP AND BEARING LOCK NUT**
   (a) Remove the cotter pin and lock nut cap.
   (b) With the parking brake engaged, remove the bearing lock nut.

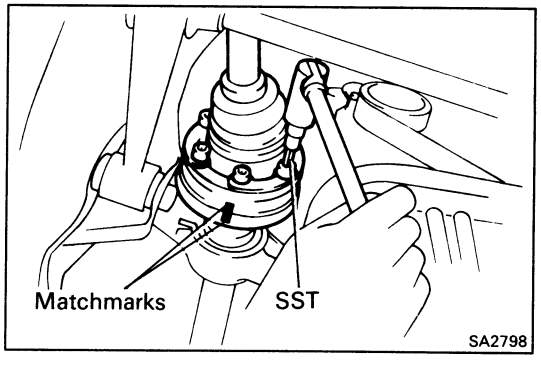

4. **LOOSEN SIX BOLTS HOLDING DRIVE SHAFT TO DIFFERENTIAL SIDE GEAR SHAFT OR CENTER DRIVE SHAFT**
   (a) Place matchmarks on the drive shaft and side gear shaft.

   NOTICE: Do not punch the marks.

   Use paint, etc.

   (b) With the parking brake engaged, using SST, loosen the six hexagon bolts.

   SST 09043-88010

   HINT: Do not remove the bolts, finger tighten them not to drop down the drive shaft.

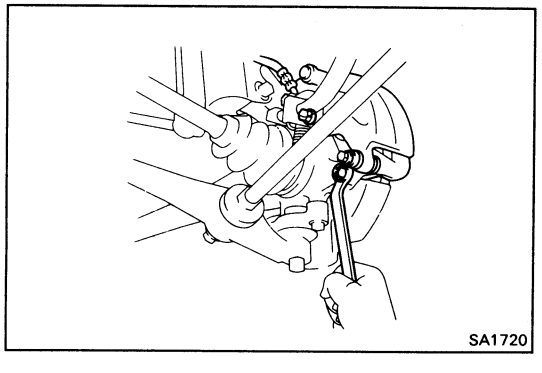

5. **REMOVE BRAKE CALIPER**
   Remove the brake caliper from the axle carrier and suspend it with wire.

6. **REMOVE ROTOR DISC**
   HINT: Before removing the rotor disc, place matchmarks on the axle shaft and rotor disc.

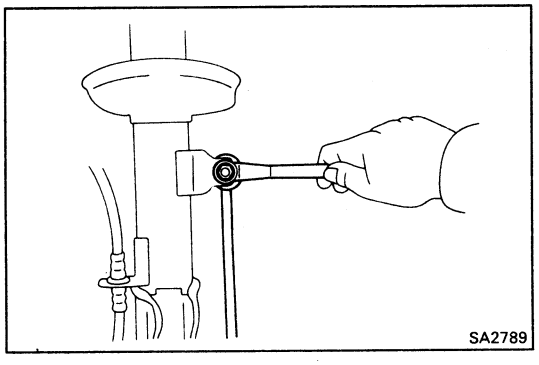

7. DISCONNECT STABILIZER LINK

Remove the upper side nut from the stabilizer link.

HINT: If the ball joint stud turns together with the nut, use a hexagon wrench 5 mm (0.197 in.) to hold the stud.

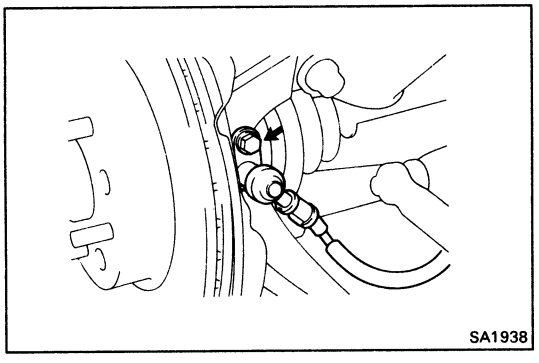

8. (w/ ABS)
REMOVE SPEED SENSOR FROM AXLE CARRIER

Remove the bolt and pull out the speed sensor.

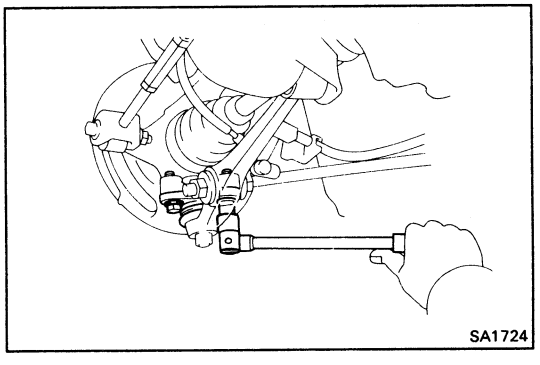

9. DISCONNECT LOWER ARM FROM REAR AXLE CARRIER

(a) Remove the two bolts holding the ball joint to the lower arm.

(b) Disconnect the lower arm.

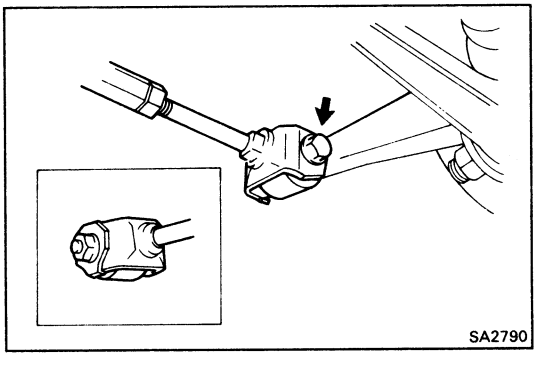

10. DISCONNECT TIE ROD END

(a) Remove the tie rod end mounting bolt and nut, disconnect the tie rod end from the rear axle carrier.

(b) Similarly disconnect the other side.

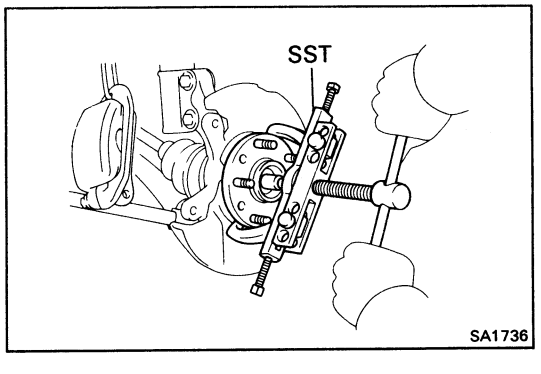

11. DISCONNECT DRIVE SHAFT FROM AXLE CARRIER

Using SST, disconnect the drive shaft from the axle carrier.

SST 09950-20017

NOTICE:

- **Cover the drive shaft boot with cloth to protect it from damage.**
- **(w/ ABS)**
  Be careful not to damage the sensor rotor of the drive shaft.

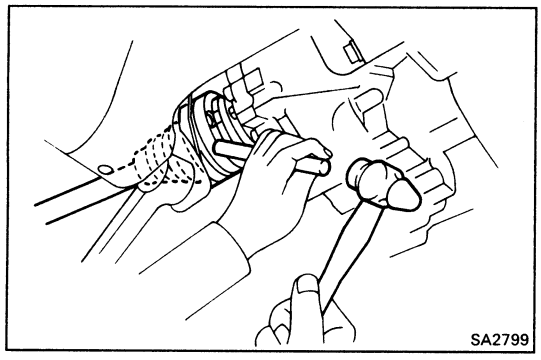

12. REMOVE LH DRIVE SHAFT

Using a hammer and brass bar, drive out the drive shaft from the transaxle.

NOTICE:

- **Be careful not to damage the side gear shaft.**
- **Be careful not to damage the differential side oil seal.**

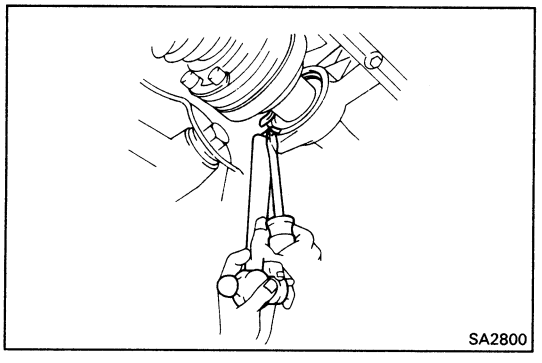

13. REMOVE RH DRIVE SHAFT

(a) Using a hammer and screwdriver, remove the snap ring from the bearing bracket.

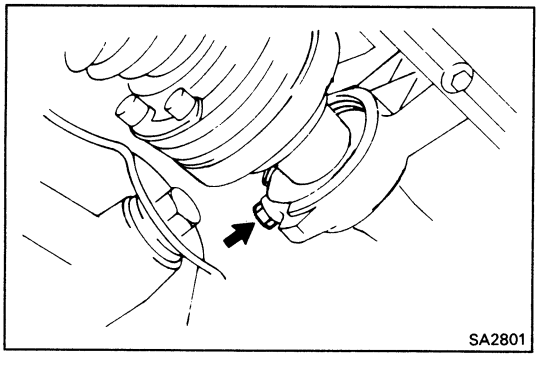

(b) Remove the bolt from the bearing bracket.

(c) Remove the RH drive shaft with center drive shaft.

NOTICE: Be careful not to damage the differential side oil seal.

HINT: If it is hard to remove the bearing, use a brass bar and hammer and the drive flange end of the drive shaft.

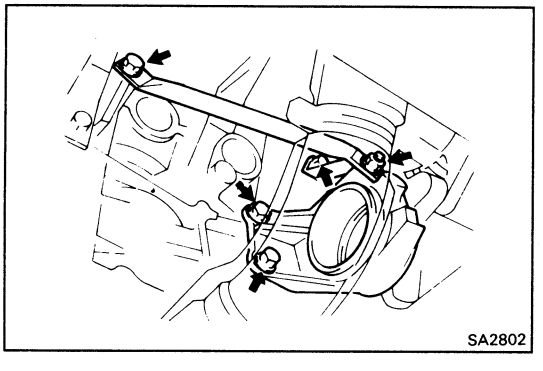

14. REMOVE DRIVE SHAFT BEARING BRACKET AND BEARING BRACKET STAY

(a) Remove the two bolts, nut and the two bearing bracket stays from the bearing bracket and engine.

(b) Remove the two bolts and the bearing bracket from the engine.

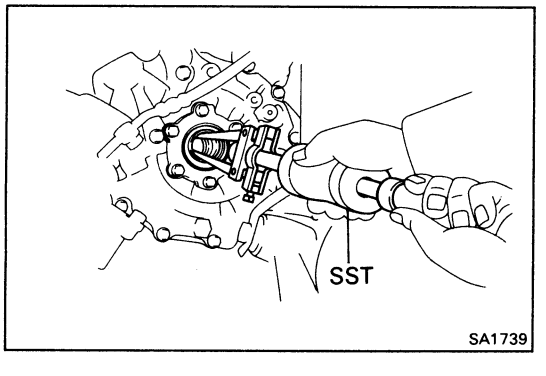

REPLACEMENT OF OIL SEAL

1. REMOVE OIL SEAL

Using SST, drive out the oil seal.

SST 09308-00010

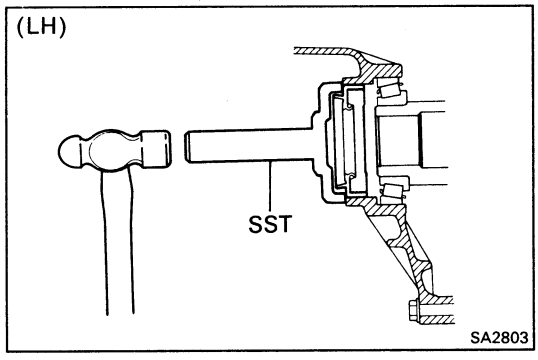

2. INSTALL NEW OIL SEAL

(a) (LH)
Using SST and hammer, tap in a new LH oil seal.

SST 09223-15010

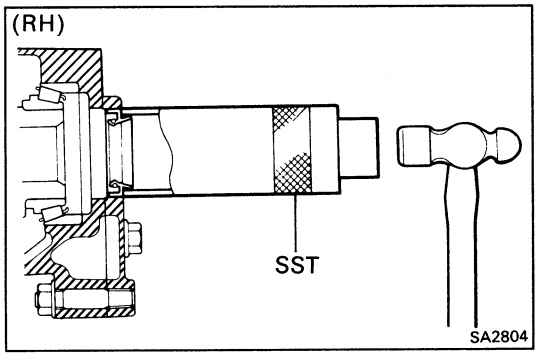

(b) (RH)
Using SST and hammer, tap in a new RH oil seal.

SST 09316-60010 (09316-00010)

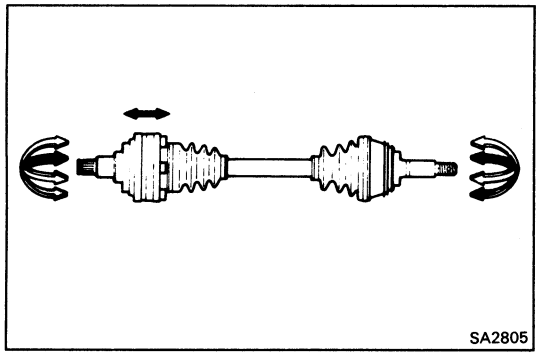
SA2805

DISASSEMBLY OF REAR DRIVE SHAFT

(See page SA-52)

1. CHECK DRIVE SHAFT

(a) Check to see that there is no play in the outboard joint.

(b) Check to see that the inboard joint slides smoothly in the thrust direction.

(c) Check to see that there is no remarkable play in the radial direction of the inboard joint.

(d) Check for damage to boots.

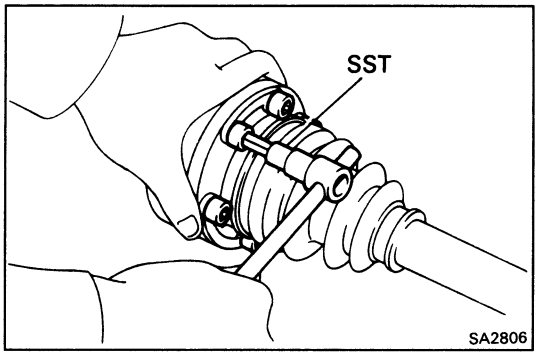

SA2806

2. DISCONNECT SIDE GEAR SHAFT

(a) Using SST, remove the six hexagon bolts and the three washers.

SST 09043-88010

(b) Disconnect the side gear shaft from the drive shaft.

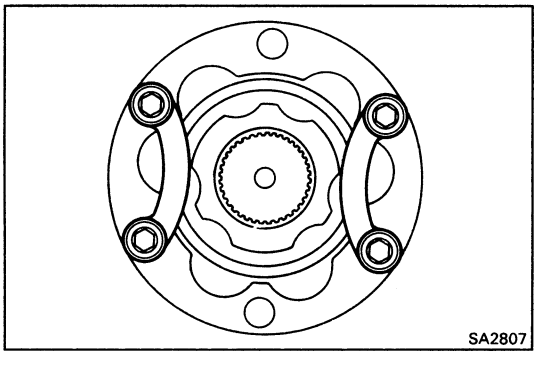
SA2807

(c) Use bolts, nuts and washers to keep the inboard joint together.

NOTICE: Tighten the bolts by hand to avoid scratching the flange surface.

3. REMOVE INBOARD JOINT AND BOOT CLAMPS

(a) Mount the inboard joint sub-assembly in a vise.

HINT:

- Use a set of soft jaws in the vise to protect the inboard joint sub-assembly.
- Cover the outboard joint side dust cover with cloth to protect it from damage.

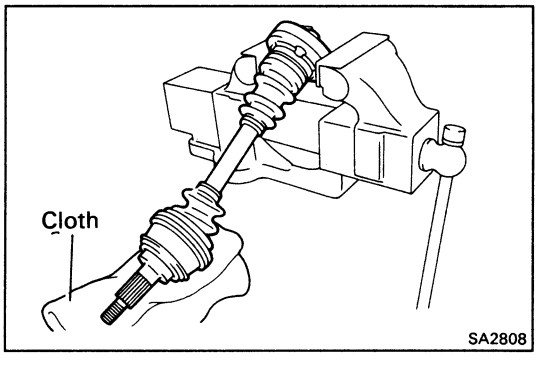

SA2808

(b) Using a screwdriver, remove the two inboard joint boot clamps.

(c) Remove the inboard joint boot from the inboard joint cover.

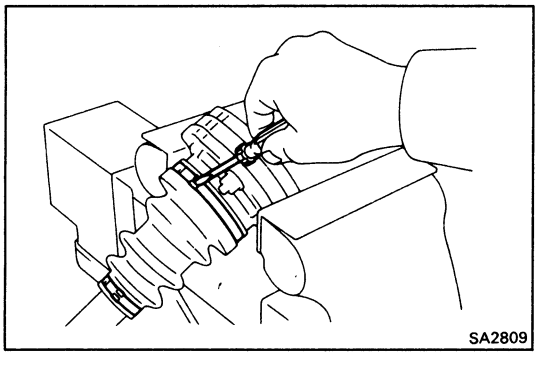
SA2809

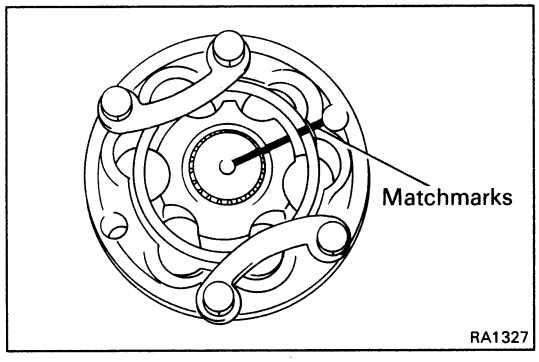

4. DISASSEMBLE INBOARD JOINT

(a) Place matchmarks on the inboard joint and drive shaft.

NOTICE: Do not punch marks.

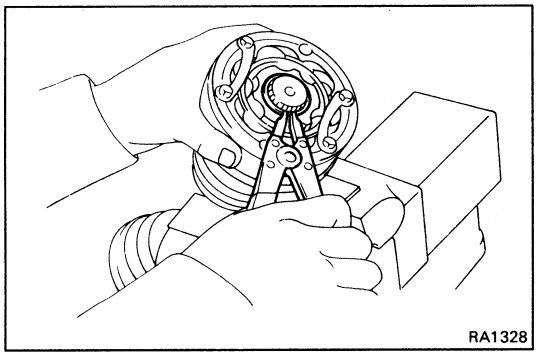

(b) Using snap ring pliers, remove the snap ring.

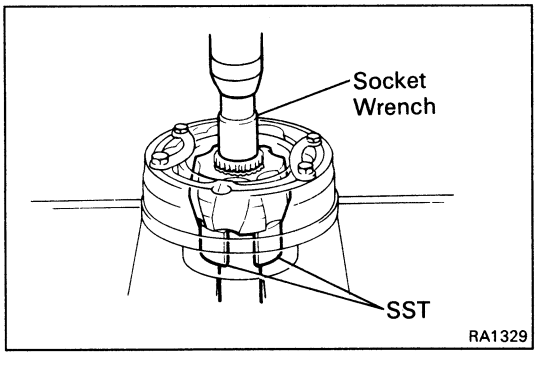

(c) Using SST, a socket wrench and a press, remove the inboard joint from the drive shaft.

SST 09726-10010 (09726-00030)

(d) Remove the bolts, nuts and washers from the inboard joint.

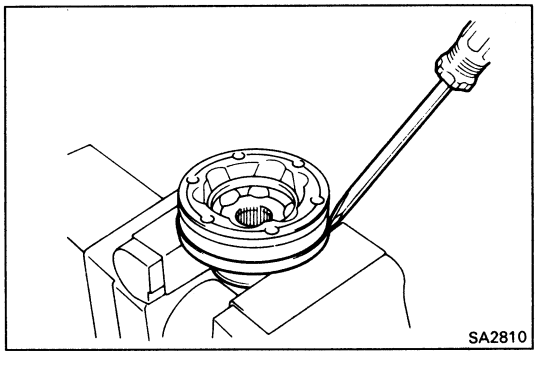

(e) Using a screwdriver, unstake the inboard joint cover.

(f) Using a screwdriver, pry out the inboard joint from the inboard joint cover.

NOTICE: When lifting the inboard joint, hold onto the inner race and outer race.

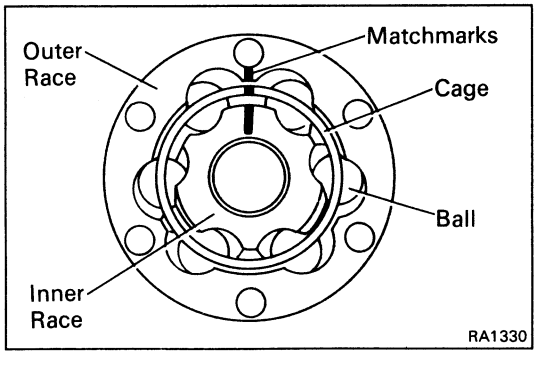

HINT: Should the joint become disassembled, reassemble it in the way shown.

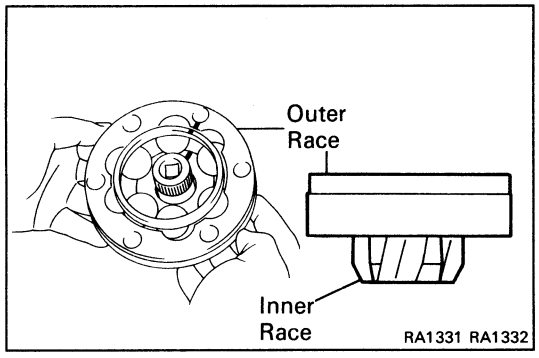

SERVICE HINT

(a) Align the matchmarks place before disassembly.
(b) Insert the spark plug wrench into the inner race.
(c) Lift the outer race and cage, and insert the six balls.

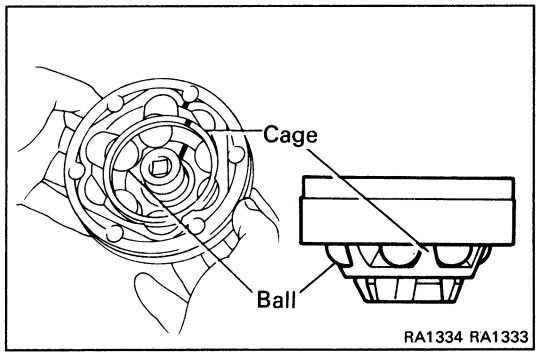

(d) Jiggle the outer race and cage as shown to place the balls in their respective grooves.
(e) Lower the outer race and cage so that fit tightly with the inner race.

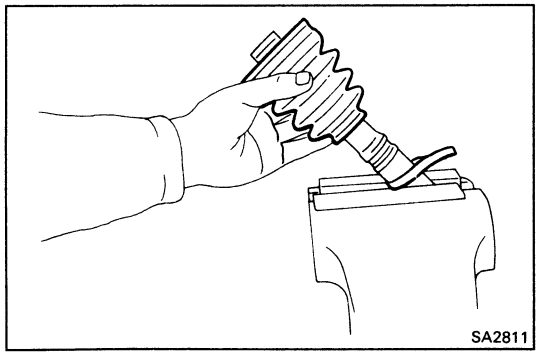

5. REMOVE BOOTS

Remove boots of the inboard joint and outboard joint.

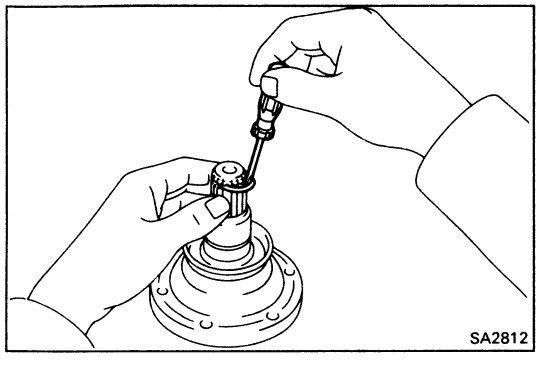

6. REPLACE SIDE GEAR SHAFT SNAP RING

(a) Using a screwdriver, pry out the snap ring.
(b) Using snap ring pliers, install the new snap ring.

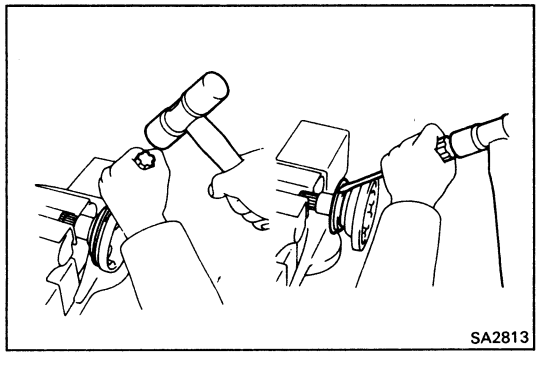

7. REMOVE DUST COVER FROM SIDE GEAR SHAFT

Using a screwdriver and hammer, tap out the dust cover.

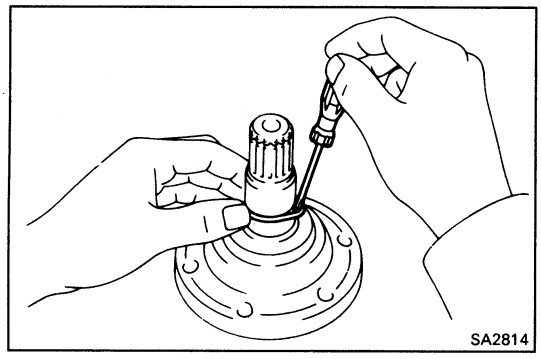

8. REPLACE SIDE GEAR SHAFT O-RING

(a) Using s screwdriver, remove the O-ring.

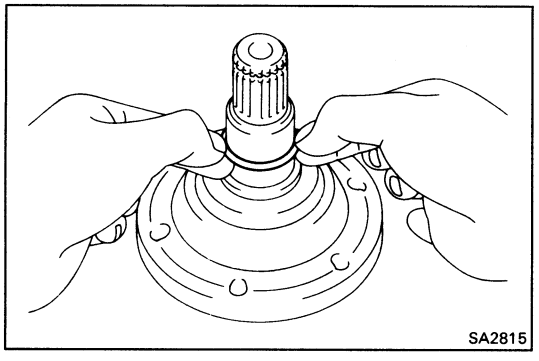

(b) Coat O-ring with MP grease.

(c) Install a new O-ring.

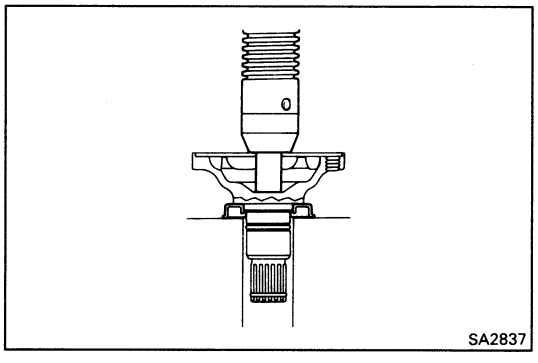

9. INSTALL DUST COVER TO SIDE GEAR SHAFT

Using a press, install a new dust cover.

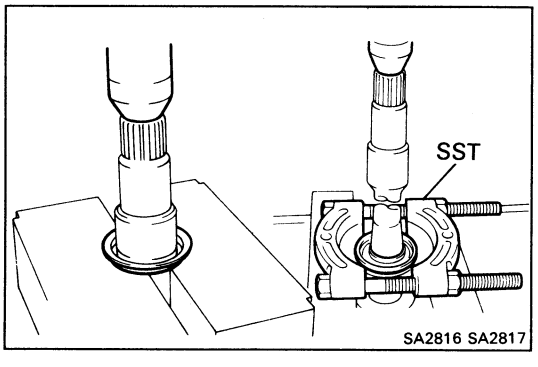

10. REMOVE DUST COVER FROM CENTER DRIVE SHAFT

Using SST and press, remove the dust cover from the inboard joint.

SST 09950-00020

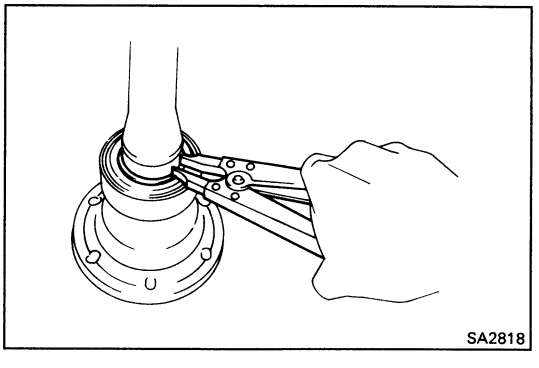

11. REMOVE BEARING FROM CENTER DRIVE SHAFT

(a) Using snap ring pliers, remove the snap ring from the inboard joint.

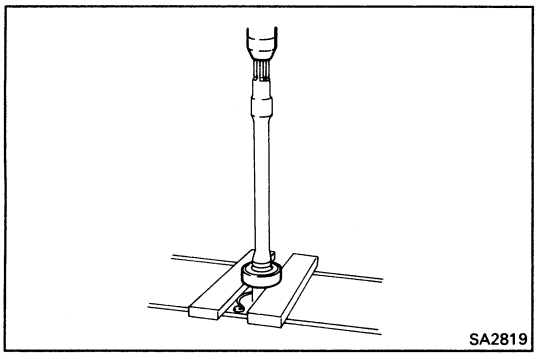
SA2819

(b) Using a press, press out the bearing from the inboard joint.

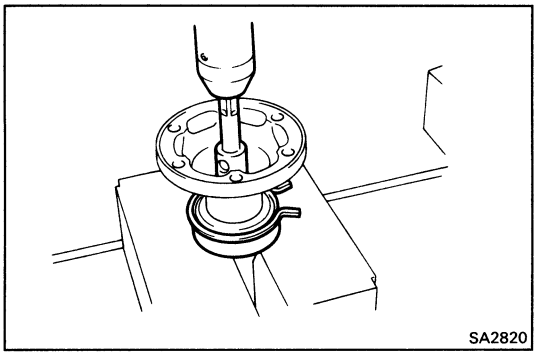
SA2820

12. INSTALL BEARING TO CENTER DRIVE SHAFT

(a) Install a new snap ring to the center drive shaft.

(b) Using a press and extension bar, press in a new bearing.

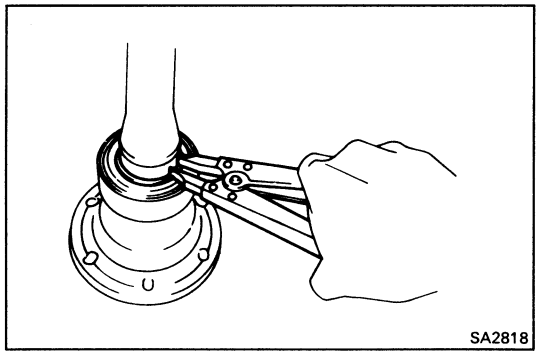
SA2818

(c) Using snap ring pliers, install a new snap ring.

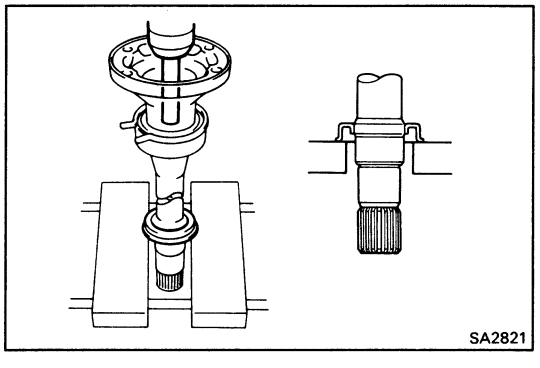
SA2821

13. INSTALL DUST COVER TO CENTER DRIVE SHAFT

Using a press, press in a new dust cover to the inboard joint.

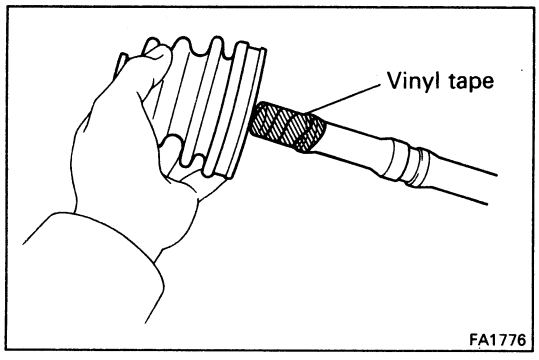

ASSEMBLY OF REAR DRIVE SHAFT

(See page SA-52)

1. TEMPORARILY INSTALL BOOTS AND NEW BOOT CLAMPS

HINT: Before installing the boot, wrap vinyl tape around the spline of the shaft to prevent damaging the boot.

NOTICE: The boot and clamp of the outboard joint are smaller than those of the inboard joint. Temporarily install the two boots and four new clamps to the outboard joint and inboard joint.

2. INSTALL BOOT TO OUTBOARD JOINT

(a) Before assembling the boots, pack in grease.

HINT: Use the grease supplied in the boot kit.

Grease capacity: 120 – 130 g (0.26 – 0.29 lb)
Grease color: Black

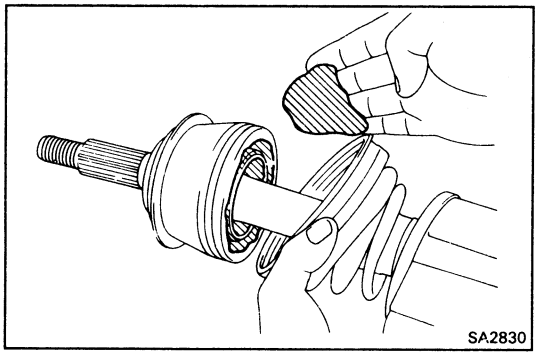

(b) Install the two boot clamps to the outboard joint boot.

(c) Bend the boot clamp and lock it as shown.

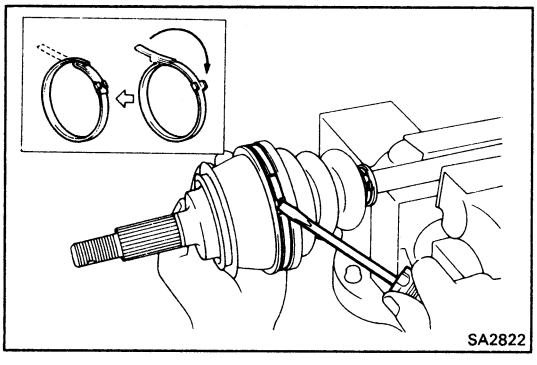

3. INSTALL INBOARD JOINT COVER

(a) Clean contacting surfaces of any residual packing material using gasoline or alcohol.

(b) Apply seal packing to the inboard joint cover as shown.

Seal packing: Part No.08826-00801, THREE BOND 1121 or equivalent

HINT: Avoid applying an excess amount to the surface.

(c) Align the bolt holes of the cover with those of the inboard joint, then insert the hexagon bolts.

(d) Using a hammer and brass bar, tap the rim of the inboard joint cover into place.

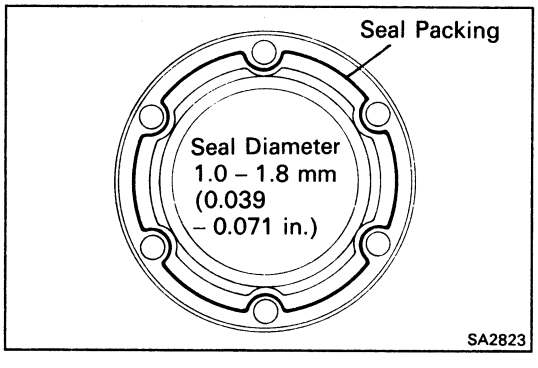

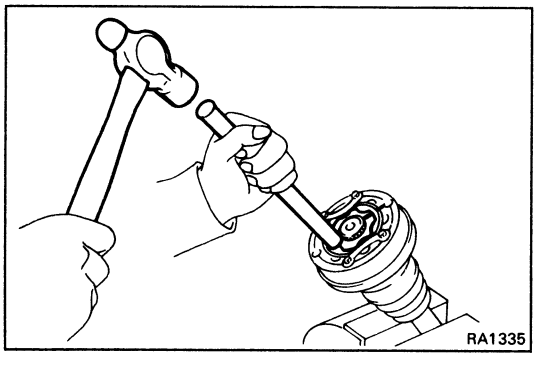

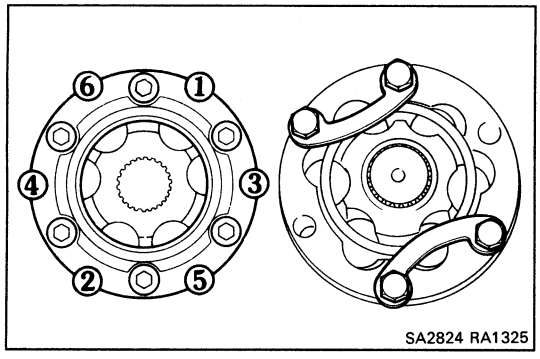

(e) Do this in the order shown, and repeat several time.

(f) Use bolts, nuts and washers to keep the inboard joint together.

NOTICE: Tighten the bolts by hand to avoid scratching the flange surface.

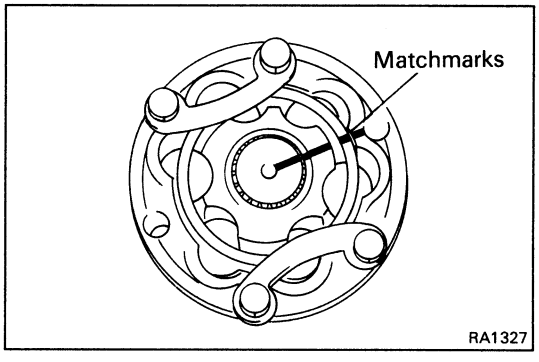

4. ASSEMBLE INBOARD JOINT

(a) Align the matchmarks placed before disassembly.

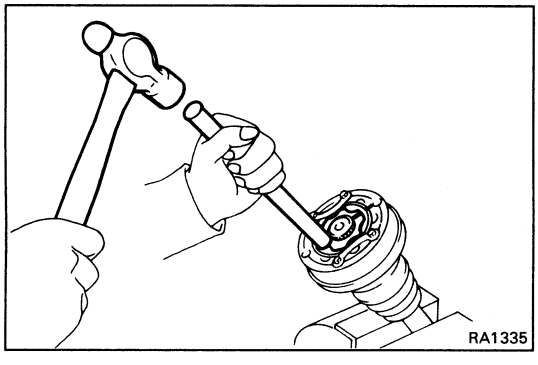

(b) Using a brass bar and hammer, tap the inboard joint onto the drive shaft.

NOTICE: Make sure that the brass bar is touching the inner race, and not the cage.

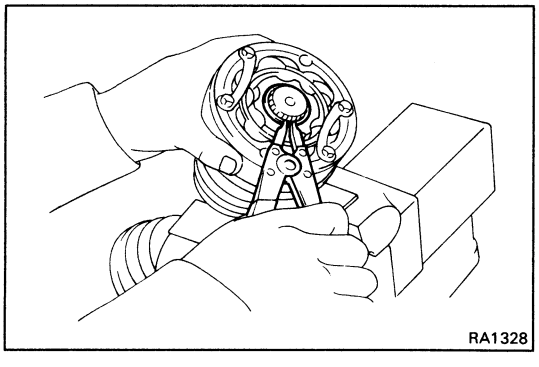

(c) Using snap ring pliers, install a new snap ring.

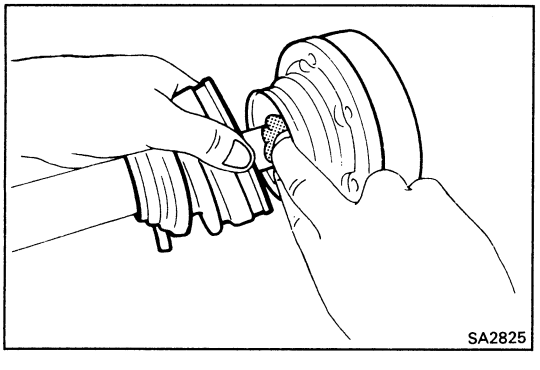

(d) Pack in grease to the inboard tulip and boot.

HINT: Use the grease supplied in the boot kit.

Grease capacity: 90 – 100 g (0.20 – 0.22 lb)
Grease color: Black

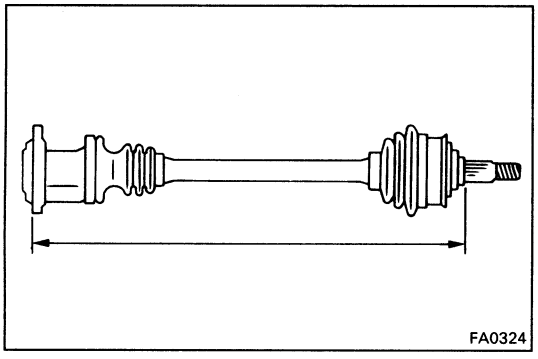
FA0324

(e) Be sure the boot is on the shaft groove.

(f) Insure that the boot is no stretched or contracted when the drive shaft is at standard length.

Drive shaft length: 389.7 ± 5.0 mm (15.343 ± 0.197 in.)

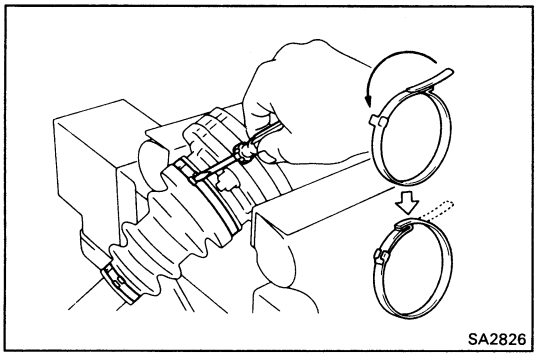
SA2826

(g) Bend the boot clamp and lock it as shown.

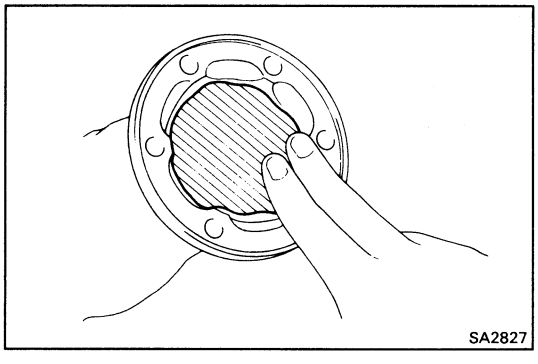
SA2827

5. INSTALL SIDE GEAR SHAFT

(a) Pack in grease to the side gear shaft.

HINT: Use the grease supplied in the boot kit.

Grease capacity: 43 – 53 g (0.09 – 0.12 lb)
Grease color: Black

(b) Remove the two washers and four bolts from the drive shaft.

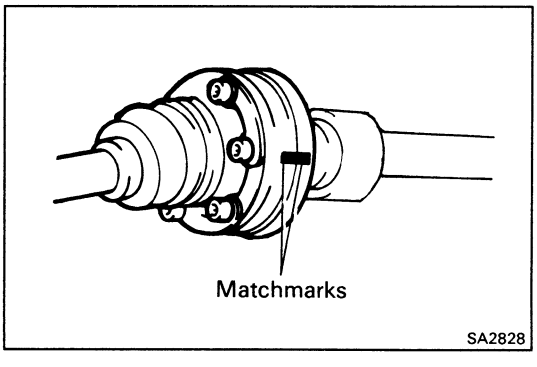

SA2828

(c) Align the matchmarks placed before remove, and install the side gear shaft or center drive shaft and a new gasket to the inboard joint sub-assembly.

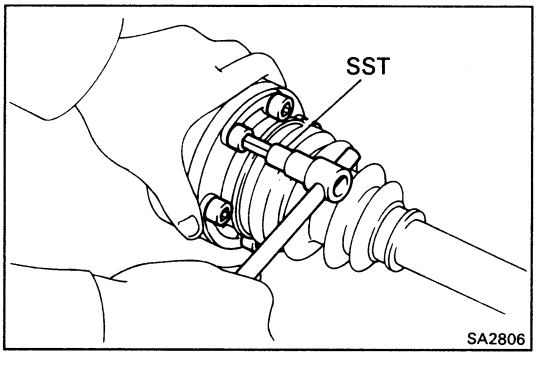

SA2806

(d) Using SST, temporarily tighten the six hexagon bolts with three washers.

SST 09043-88010

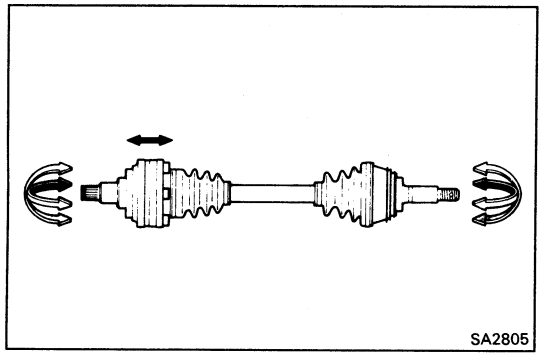

6. CHECK DRIVE SHAFT

(a) Check to see that the there is no play in the inboard joint and outboard joint.

(b) Check to see that the inboard slide smoothly in the thrust direction.

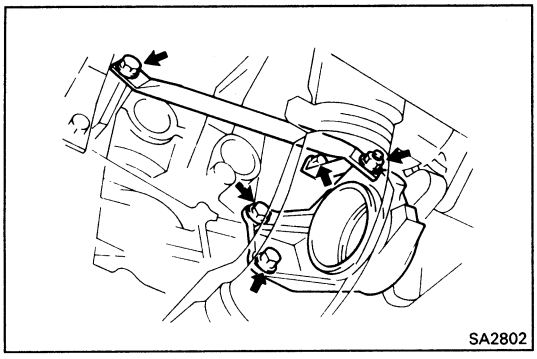
SA2802

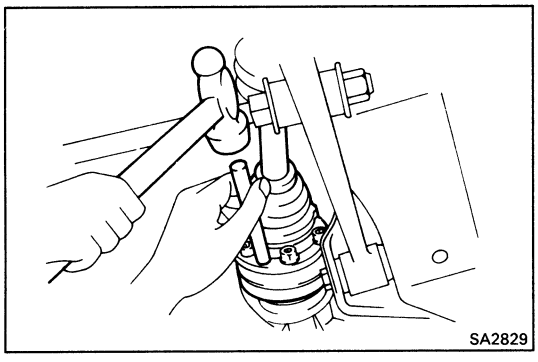
SA2829

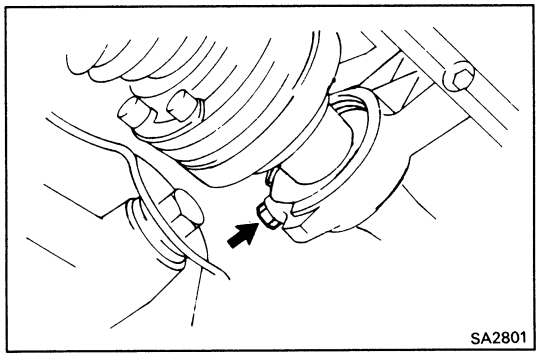
SA2801

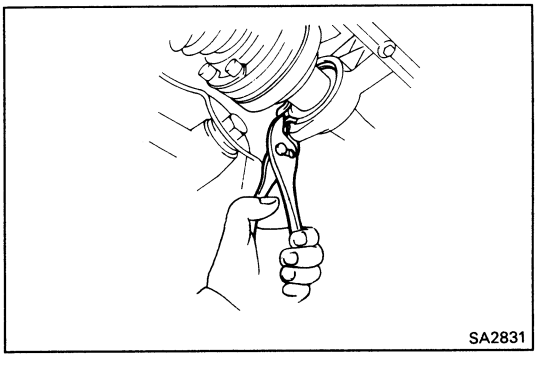
SA2831

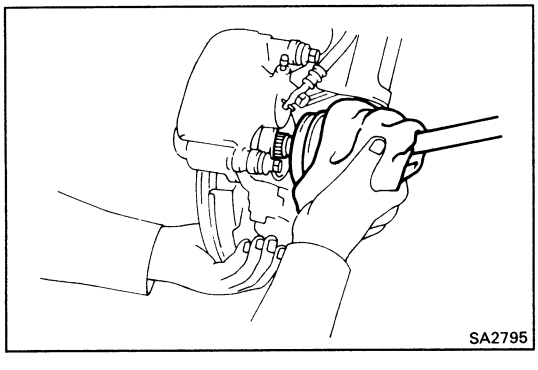
SA2795

INSTALLATION OF REAR DRIVE SHAFT

(See page SA-52)

1. INSTALL DRIVE SHAFT BEARING BRACKET AND BEARING BRACKET STAY

(a) Install the bearing bracket to the engine with the two bolts.

Torque: 650 kg-cm (47 ft-lb, 64 N·m)

(b) Install the two bearing bracket stays to the engine and bearing bracket with the two bolts and the nut.

Torque:
Bolt: 770 kg-cm (56 ft-lb, 75 N·m)
Nut: 770 kg-cm (56 ft-lb, 75 N·m)

2. INSTALL LH DRIVE SHAFT

(a) Apply the oil seal lip with MP grease.

(b) Using a brass bar and hammer, drive in the drive shaft until it makes contact with the pinion shaft.

NOTICE: Be careful not to damage the boots.

HINT:
- Before installing the drive shaft, set the snap ring opening side facing downward.
- Whether or not the drive shaft is making contact with the pinion shaft can be known by sound or feeling when driving it in.

3. INSTALL RH DRIVE SHAFT

(a) Apply MP grease to the transaxle oil lip.

(b) Insert the center drive shaft with the RH drive shaft to the transaxle through the bearing bracket.

(c) Install the bolt to the bearing bracket.

Torque: 300 kg-cm (24 ft-lb, 32 N·m)

(d) Using pliers, install the snap ring to the bearing bracket.

4. CONNECT OUTBOARD JOINT SIDE OF DRIVE SHAFT

Connect the outboard joint side of the drive shaft to the axle shaft.

NOTICE:
- **Be careful not to damage the boots.**
- **(w/ ABS)**
  Be careful not to damage the sensor rotor of the drive shaft.

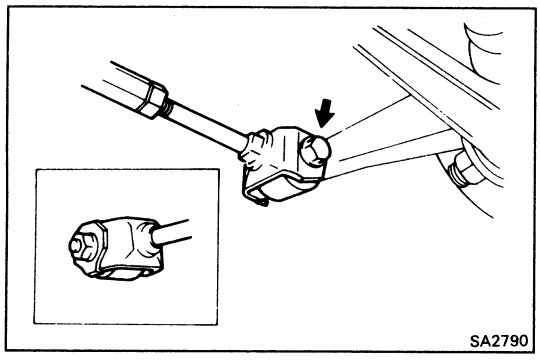

5. CONNECT TIE ROD END

Temporarily connect the tie rod end to the rear axle carrier with the bolt and nut.

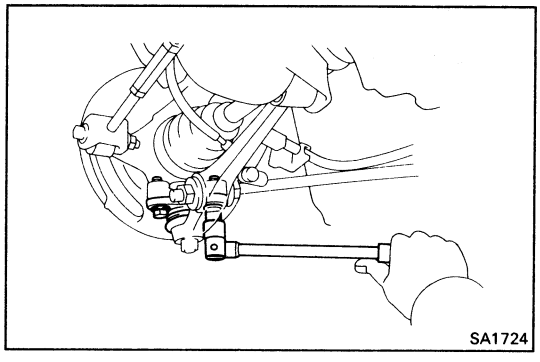

6. CONNECT BALL JOINT TO AXLE CARRIER

(a) Connect the ball joint to the axle shaft.

(b) Install and torque the two bolts.

Torque 1,150 kg-cm (73 ft-lb, 113 N·m)

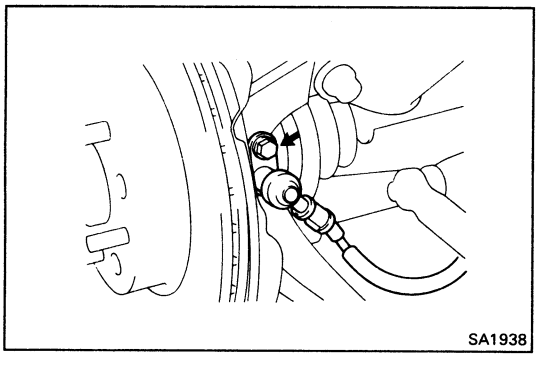

7. (W/ABS)
INSTALL SPEED SENSOR TO AXLE CARRIER

Torque: 80 kg-cm (69 in.-lb, 7.4 N·m)

HINT: Before installing, check that there is no ferric chip or foreign material on the sensor tip.

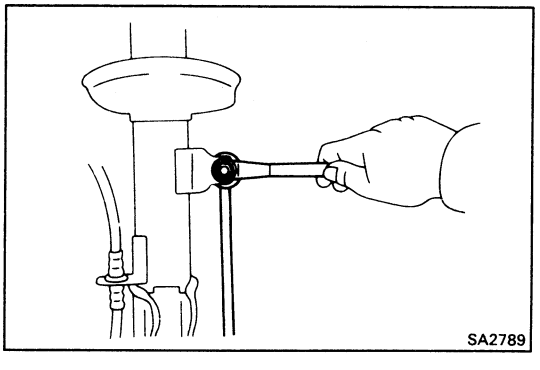

8. CONNECT STABILIZER LINK

Connect the upper side to the stabilizer link.

Torque: 500 kg-cm (36 ft-lb, 49 N·m)

HINT: If the ball joint stud turns together with the nut, use a hexagon wrench 5 mm (0.197 in.) to hold the stud.

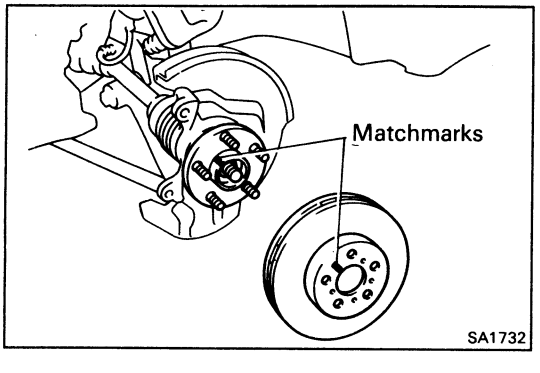

9. INSTALL ROTOR DISC TO AXLE CARRIER

HINT: Align the matchmarks, and install the rotor the axle shaft.

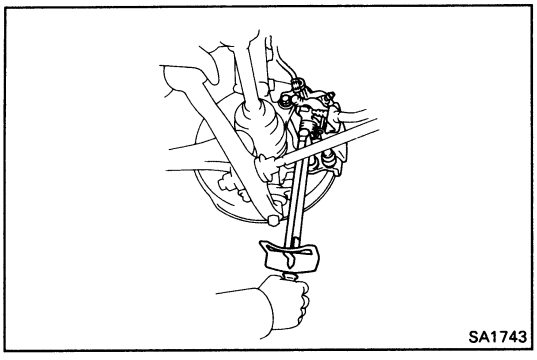

10. INSTALL BRAKE CALIPER AXLE CARRIER

Torque the two bolts.

Torque: 600 kg-cm (43 ft-lb, 59 N·m)

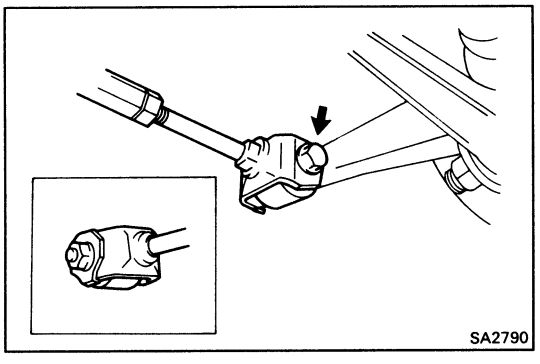

11. TORQUE BOLT AND NUT

Torque the tie rod end mount bolt and nut.

Torque: 1,050 kg-cm (76 ft-lb, 103 N·m)

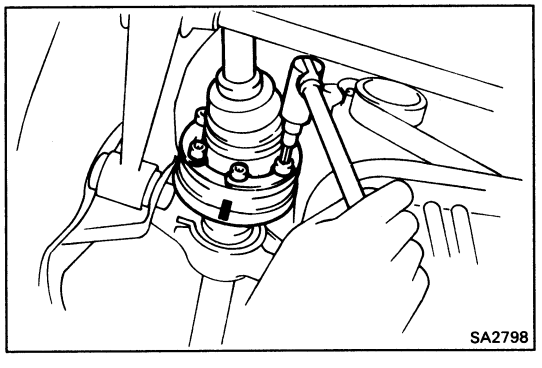

12. TIGHTEN INBOARD JOINT HOLDING SIX HEXAGON BOLTS

With the parking brake engaged, using SST torque the six hexagon bolts.

SST 09043-88010

Torque: 660 kg-cm (48 ft-lb, 65 N·m)

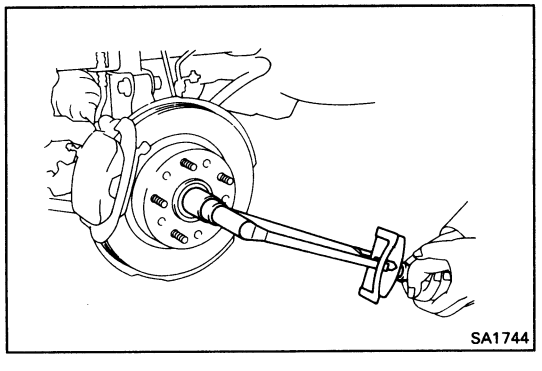

13. INSTALL BEARING, LOCK NUT CAP AND COTTER PIN

(a) Install the lock nut.

(b) With the parking brake engaged, and tighten the nut.

Torque: 3,000 kg-cm (217 ft-lb, 294 N·m)

(c) Install the lock nut cap, and using pliers, install a new cotter pin.

14. FILL TRANSAXLE WITH GEAR OIL

Oil grade: API GL-4 or GL-5
Viscosity: SAE 75W-90 or 85w-90

15. INSTALL ENGINE UNDER COVER

REAR SUSPENSION

COMPONENTS

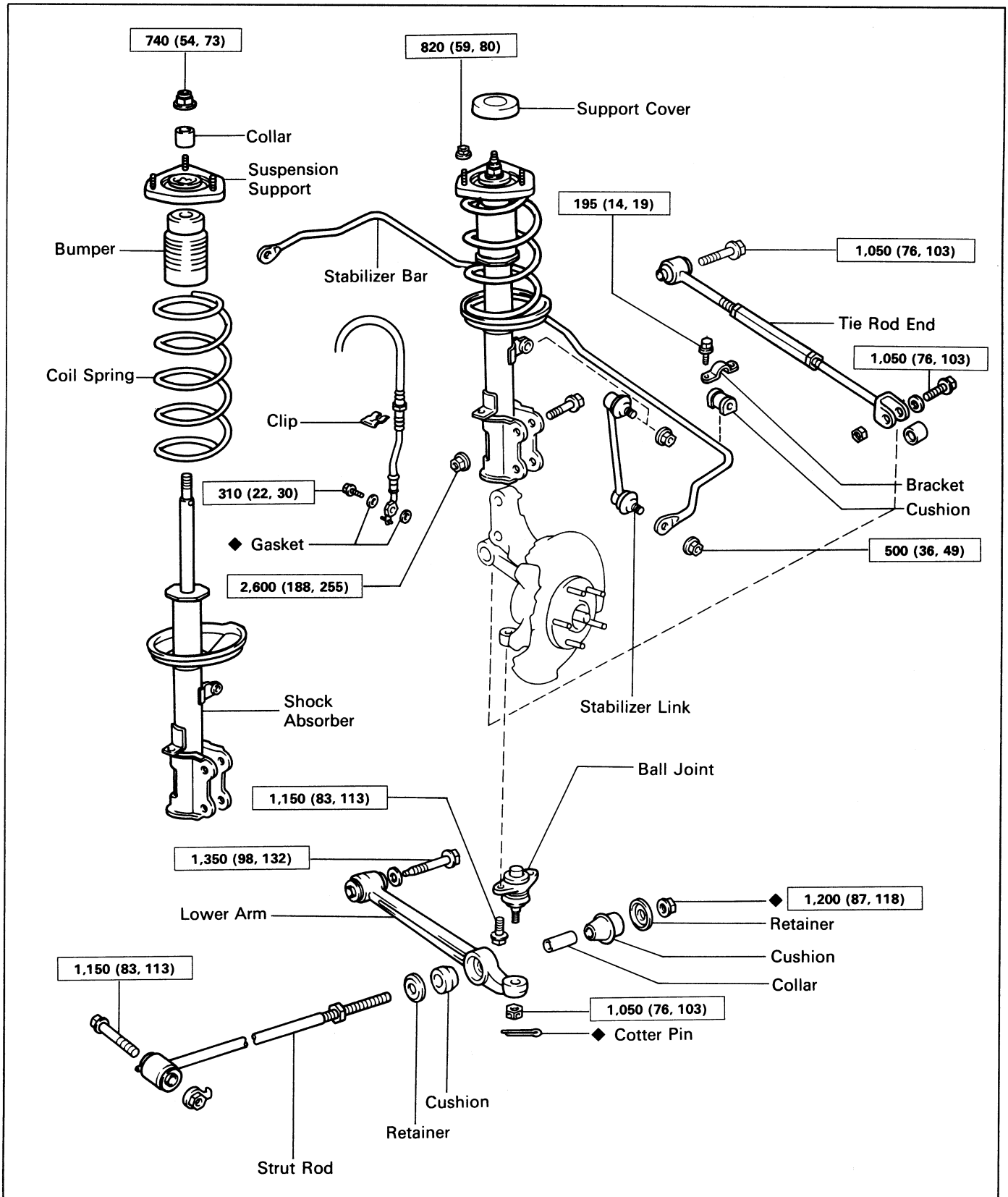

kg-cm (ft-lb, N·m) : Specified torque

◆ Non-reusable part

SA1745

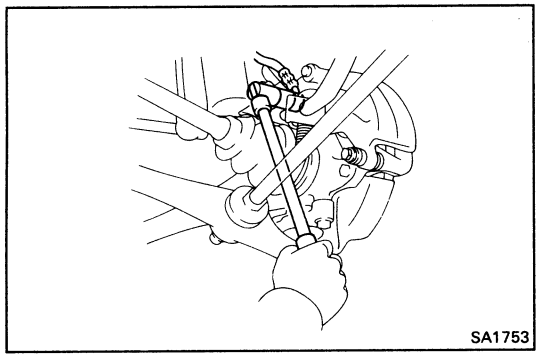
SA1753

Rear Shock Absorber

(See page SA-69)

REMOVAL OF REAR SHOCK ABSORBER

1. **DISCONNECT BRAKE HOSE**
   (a) Remove the hose clip.
   (b) Remove the union bolt and two gaskets and disconnect the brake hose.
   (c) Drain the brake fluid into a container.
   (d) Remove the clip and remove brake hose from the shock absorber.

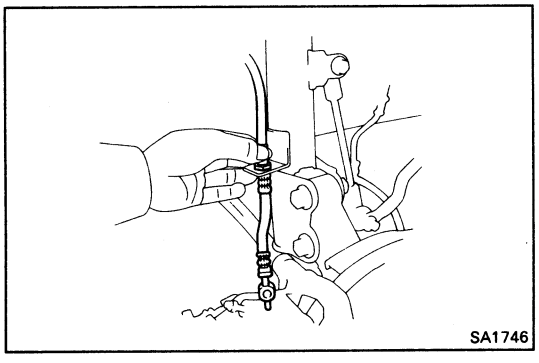
SA1746

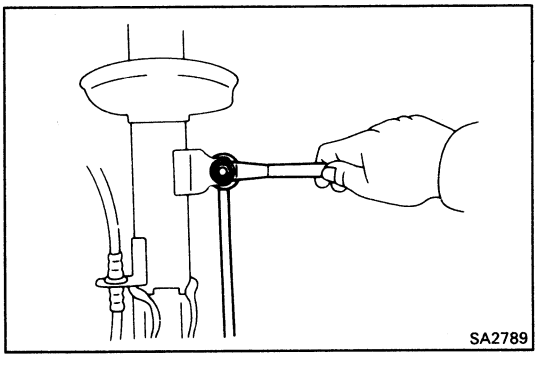
SA2789

2. **DISCONNECT STABILIZER LINK**
   Disconnect the stabilizer link from the shock absorber.
   HINT: If the ball joint stud turns together with the nut, use a hexagon wrench 5 mm (0.197 in.) to hold the stud.

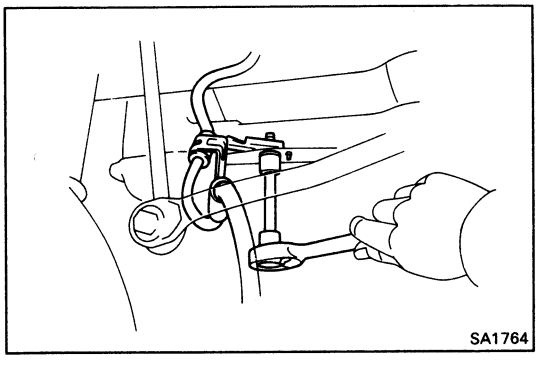
SA1764

3. **(w/ ABS)**
   REMOVE SPEED SENSOR WIRE HARNESS CLAMP

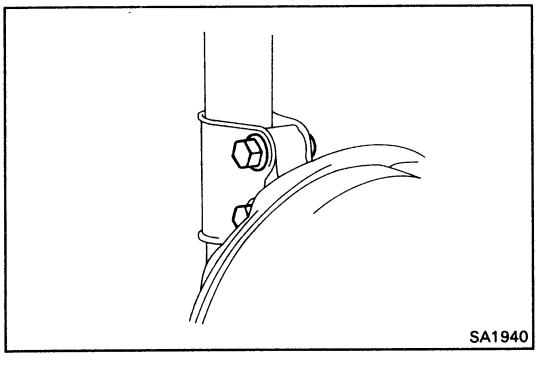
SA1940

4. **DISCONNECT REAR AXLE CARRIER FROM SHOCK ABSORBER**
   Loosen the bolts and nuts, and remove the nuts.
   HINT: Leave the bolts not to drop the axle carrier assembly.

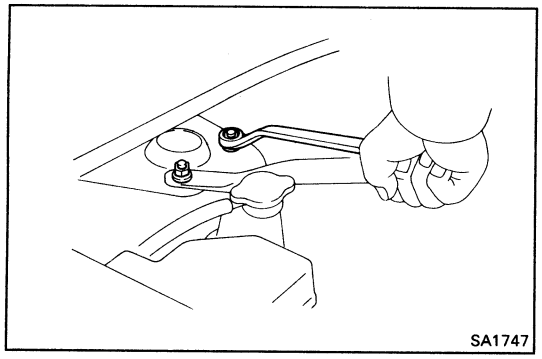

5. REMOVE SHOCK ABSORBER

(a) Remove the three suspension holding nuts.

(b) Remove the two upper bolts and remove the axle carrier assembly.

(c) Remove the shock absorber.

NOTICE: Cover the drive shaft boot with cloth to avoid damaging it.

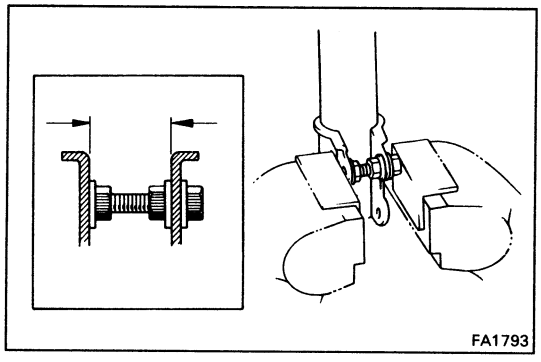

DISASSEMBLY OF REAR SHOCK ABSORBER

(See page SA-69)

1. CLAMP SHOCK ABSORBER IN VISE

Install a bolt and two nuts to the bracket at the lower portion of the shock absorber shell and secure it in a vise.

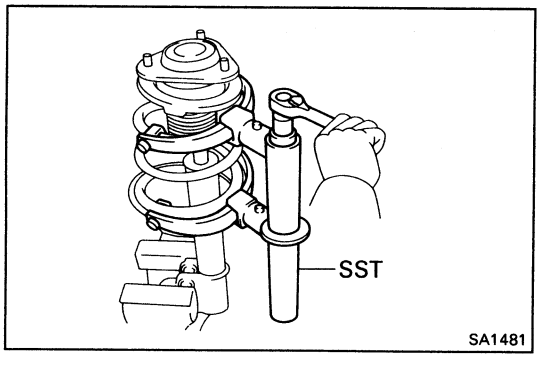

2. REMOVE COIL SPRING

(a) Using SST, compress the coil spring.

SST 09727-30020

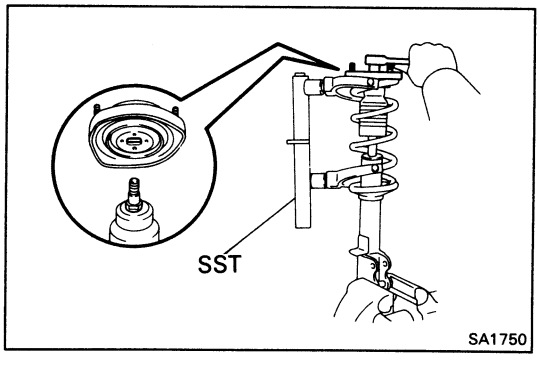

(b) Hold the octagon head of the suspension support in the vise.

(c) Remove the suspension support cover.

(d) Remove the suspension support nut.

(e) Remove the suspension support, coil spring, insulator and bumper.

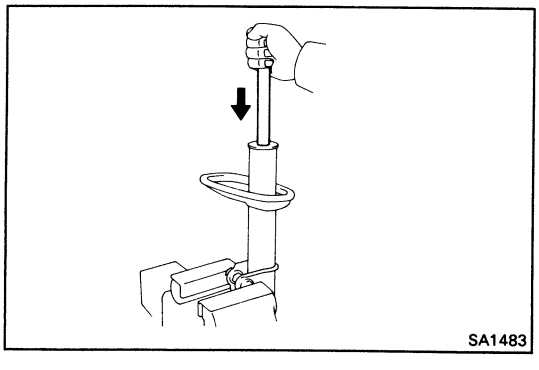

3. INSPECT OPERATION OF SHOCK ABSORBER

(a) While pushing the piston rod, check that the pull throughout the stroke is even, and that there is no abnormal resistance or noise.

(b) Push the piston rod in fully and release it. Check that it returns at a constant speed.

If the absorber operation is defective, replace the absorber, as an assembly.

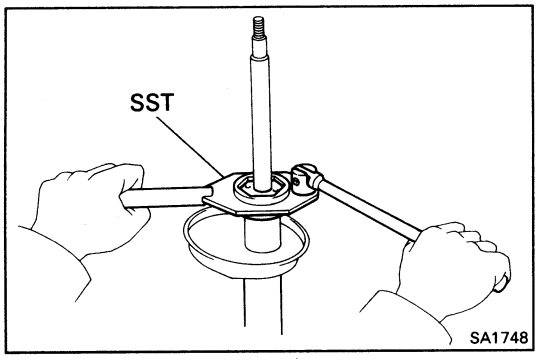

NOTICE: Before discarding the shock absorber, first loosen the ring nut 2 or 3 turns to release the gas completely.

SST 09720-00012 (09721-00071)

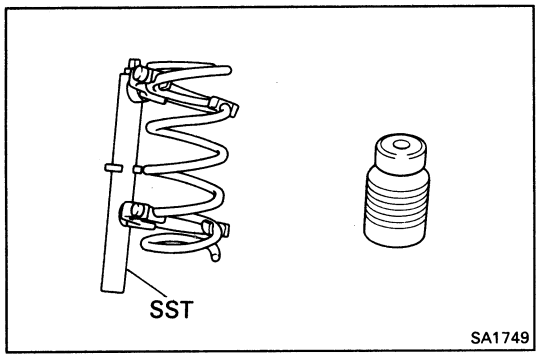

ASSEMBLY OF REAR SHOCK ABSORBER

(See page SA-69)

1. INSTALL COIL SPRING

(a) Install the bumper to piston rod.

(b) Using SST, compress the coil spring.

SST 09727-30020

(c) Install the lower insulator.

(d) Align the coil spring end with the lower seat hollow and install.

(e) Install the suspension support to piston rod.

HINT: Align the piston rod notch and the suspension support hole.

(f) Temporarily install a new suspension support nut.

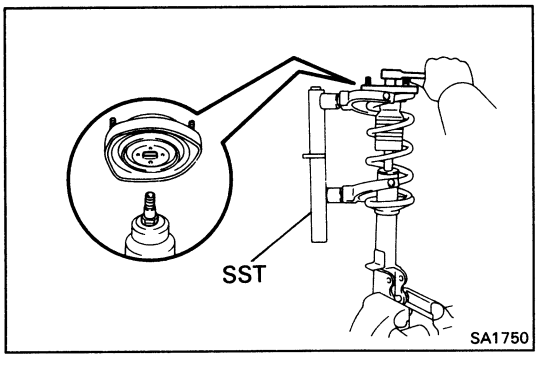

(g) Align the suspension support with the shock absorber lower bracket as shown.

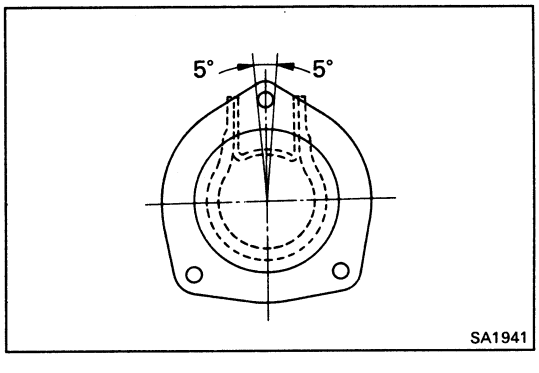

(h) Hold the octagon head of suspension support to the vise.

(i) Torque the suspension support nut.

Torque: 740 kg-cm (54 ft-lb, 73 N·m)

(j) Install the suspension support cover.

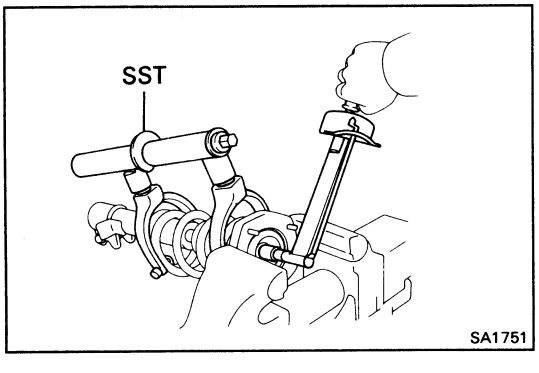

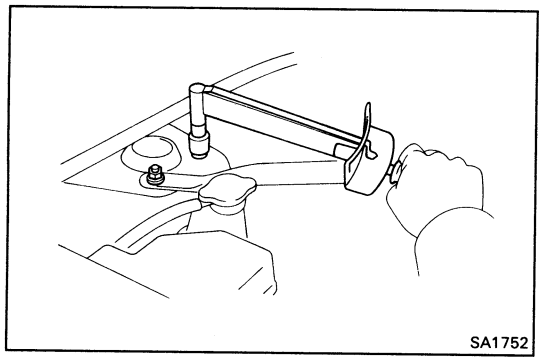
SA1752

INSTALLATION OF REAR SHOCK ABSORBER

(See page SA-69)

1. INSTALL SHOCK ABSORBER

Install the three nuts holding the shock absorber to the body. Torque the nuts.

Torque: 820 kg-cm (59 ft-lb, 80 N·m)

NOTICE: Be careful not to damage the drive shaft boot.

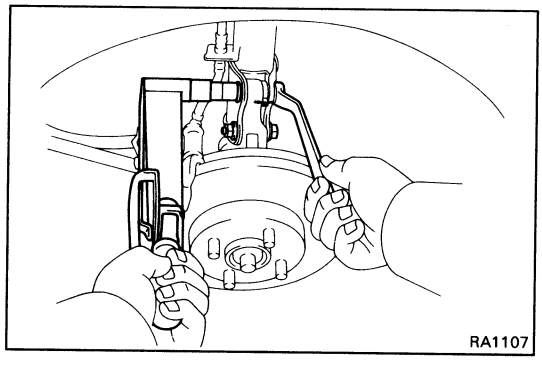
RA1107

2. INSTALL REAR AXLE CARRIER TO SHOCK ABSORBER

(a) Connect the axle carrier to the shock absorber lower bracket.

(b) Insert the two bolts from the rear side.

(c) Torque the nuts.

Torque: 2,600 kg-cm (188 ft-lb, 255 N·m)

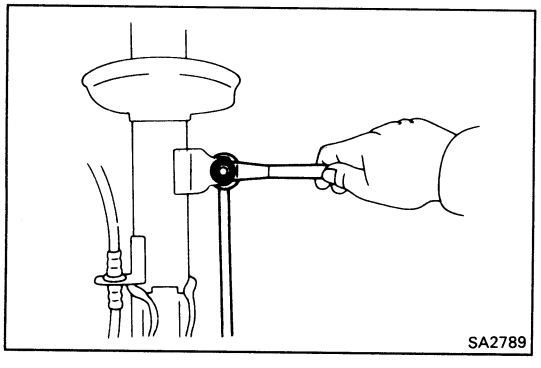
SA2789

3. CONNECT STABILIZER LINK

Connect the stabilizer link with the nut.

Torque: 500 kg-cm (36 ft-lb, 49 N·m)

HINT: If the ball joint stud turns together with the nut, use a hexagon wrench 5 mm (0.197 in.) to hold the stud.

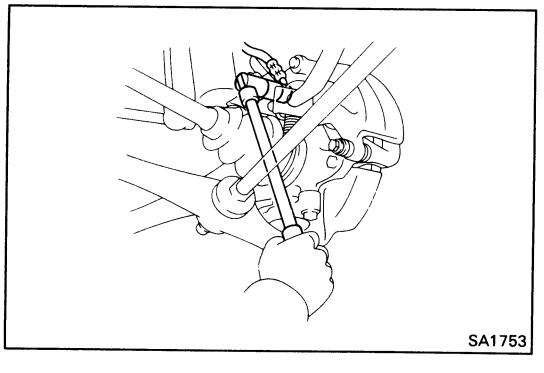
SA1753

4. CONNECT BRAKE HOSE

(a) Install the brake hose and clip to the shock absorber.

(b) Install the union bolt and two gaskets and torque the union bolt.

Torque: 310 kg-cm (22 ft-lb, 30 N·m)

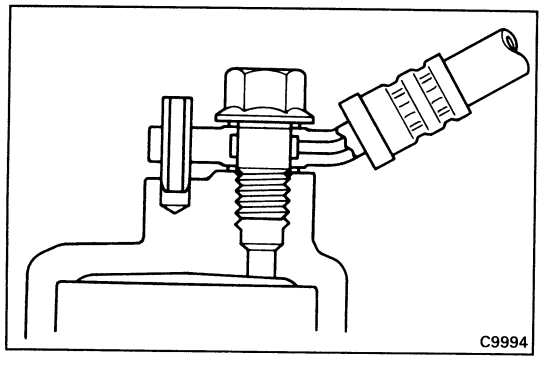
C9994

HINT: Insert the flexible hose lock securely in the lock hole in the brake caliper.

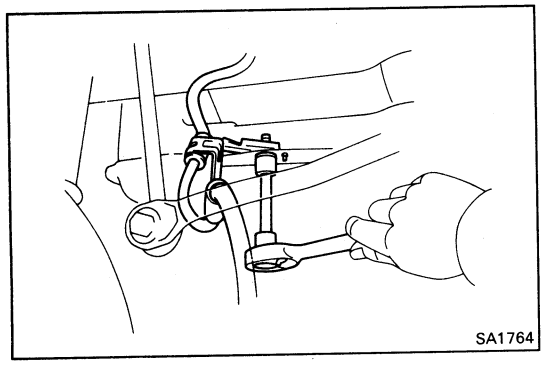

5. **(w/ ABS)**
INSTALL SPEED SENSOR WIRE HARNESS CLAMP

Install ABS speed sensor wire harness clamp to suspension cross member wire harness with the bolt.

Torque: 55 kg-cm (48 in.-lb, 5.4 N·m)

6. **BLEED BRAKE LINE**
(See page BR-7)

7. **INSPECT REAR WHEEL ALIGNMENT**
(See page SA-6)

Ball Joints

(See page SA-69)

INSPECTION AND REMOVAL OF BALL JOINTS

1. INSPECT BALL JOINTS FOR EXCESSIVE LOOSENESS

(a) Jack up the rear of vehicle and place wooden blocks with a height of 180 – 200 mm (7.09 – 7.87 in.) under one rear tire.

(b) Lower the jack until there is about half a load on the front coil spring. Place stands under the vehicle for safety.

(c) Move the lower arm up and down and check that the ball joint has no excessive play.

Ball joint vertical play: 0 mm (0 in.)

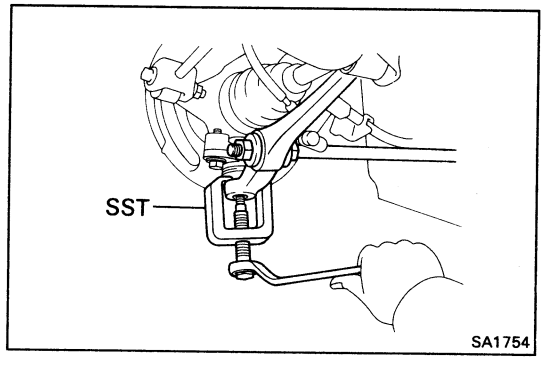

2. REMOVE BALL JOINTS

(a) Remove the cotter pin and nut from the lower arm.

(b) Using SST, disconnect the ball joint from the lower arm.

SST 09628-62011

(c) Remove the two bolts and ball joint from the rear axle carrier.

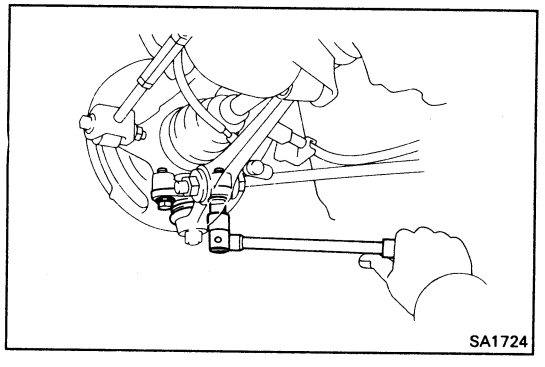

3. INSPECT BALL JOINT FOR ROTATION CONDITION

(a) Flip the ball joint stud back and forth 5 times as shown in the figure, before installing the nut.

(b) Using a torque gauge, turn the nut continuously one turn each 2 – 4 seconds and take the torque reading on the fifth turn.

Torque (turning): 15 – 30 kg-cm (13 – 26 in.-lb, 1.47 – 2.94 N·m)

If not with in specification, replace the ball joint.

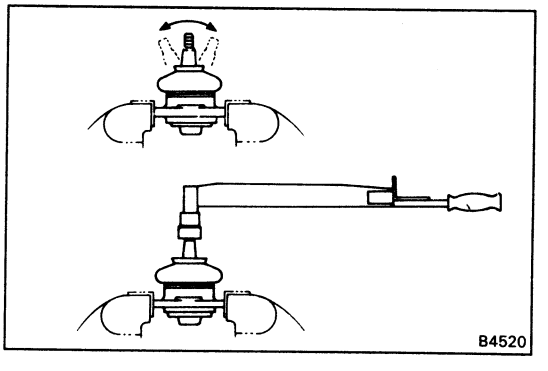

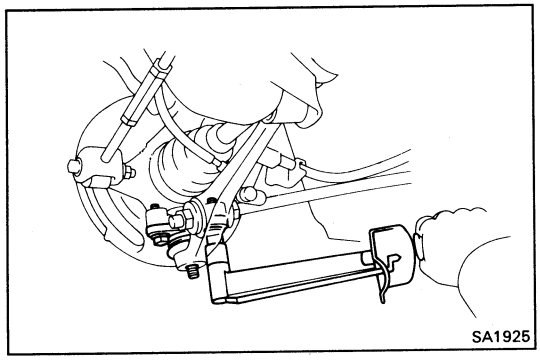

INSTALLATION OF BALL JOINT

(See page SA-69)

1. **INSTALL BALL JOINT TO REAR AXLE CARRIER**

   Install the ball joint in place with the two bolts.

   Torque: 1,150 kg-cm (83 ft-lb, 113 N·m)

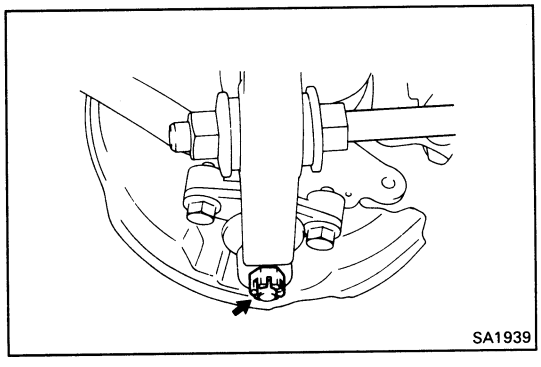

2. **CONNECT LOWER ARM**

   (a) Connect the lower arm to the ball joint.

   (b) Torque the nut.

   Torque: 930 kg-cm (67 ft-lb, 91 N·m)

   (c) Install a new cotter pin.

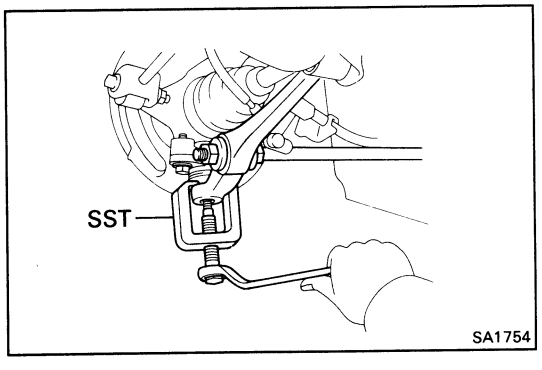

Lower Arm

(See page SA-69)

REMOVAL OF LOWER ARM

1. **DISCONNECT LOWER ARM FROM BALL JOINT**

   (a) Remove the cotter pin and nut.

   (b) Using SST, disconnect the lower arm from the ball joint.

   SST 09628-62011

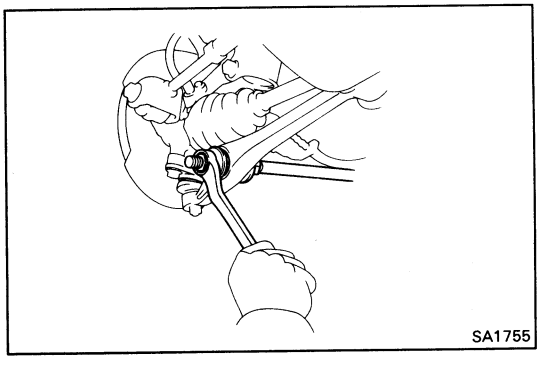

2. **REMOVE STRUT ROD NUT AND RETAINER**

   Remove a new strut rod nut and retainer from the lower arm.

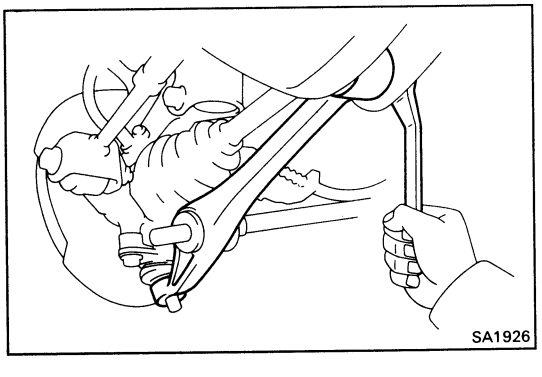

3. **REMOVE LOWER ARM**

   (a) Remove the bolt holding the lower arm to the body and remove the lower arm.

   (b) Remove the strut rod cushion, collar and retainer from the lower arm.

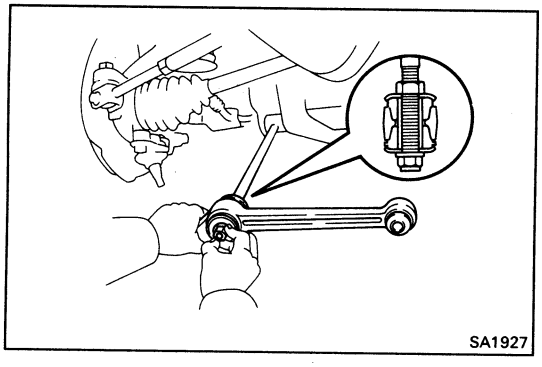
SA1927

INSTALLATION OF LOWER ARM

(See page SA-69)

1. INSTALL LOWER ARM

(a) Install the strut rod retainer, cushion and collar to the strut rod.

(b) Connect the lower arm to the strut rod.

(c) Temporarily install the strut rod nut.

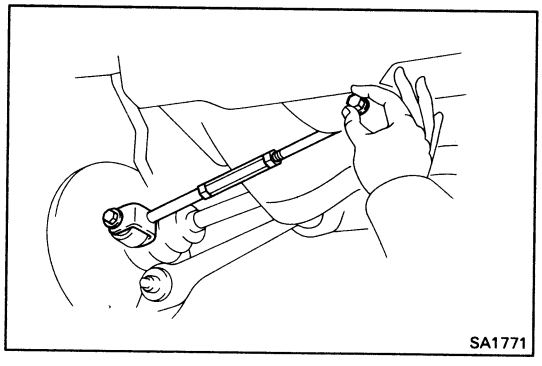
SA1771

(d) Install the lower arm to the body. Do not torque the bolt.

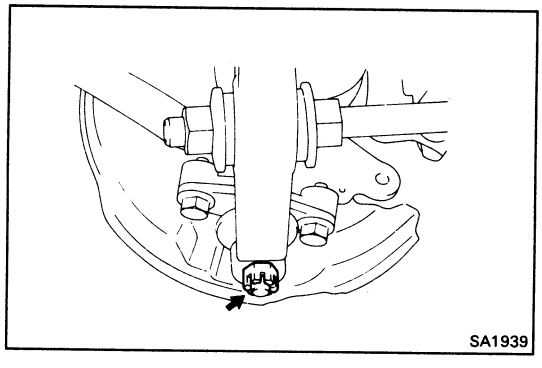
SA1939

2. CONNECT LOWER ARM TO BALL JOINT

(a) Connect the lower arm to the ball joint.

(b) Torque the nut.

Torque: 930 kg-cm (67 ft-lb, 91 N·m)

(c) Install a new cotter pin.

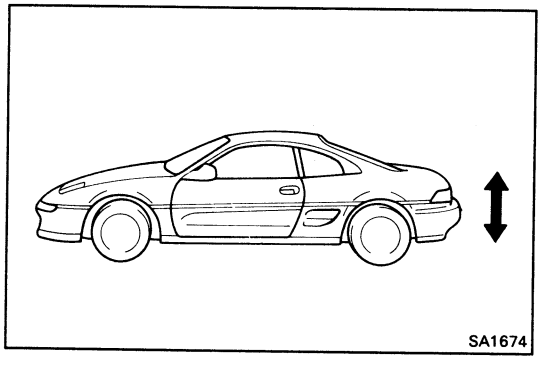
SA1674

3. INSTALL WHEEL AND LOWER VEHICLE

Rock the vehicle up and down to stabilize the suspension.

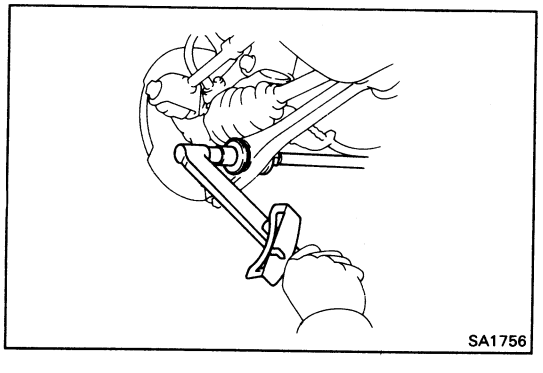
SA1756

4. TIGHTEN LOWER ARM HOLDING NUT

(a) Torque the strut rod nut.

Torque: 1,200 kg-cm (87 ft-lb, 118 N·m)

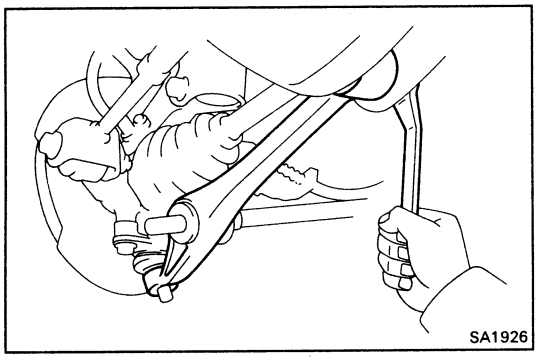

(b) Torque the lower arm holding nut.

Torque: 1,350 kg-cm (98 ft-lb, 132 N·m)

5. INSPECT REAR WHEEL ALIGNMENT

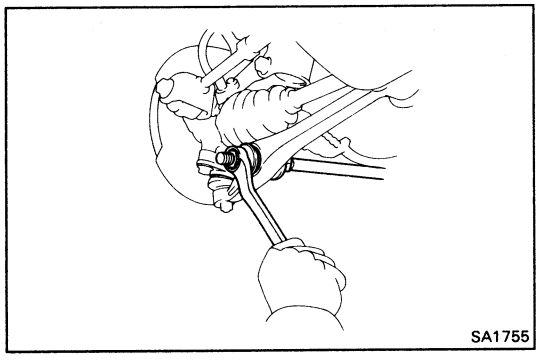

Strut Rod

(See page SA-69)

REMOVAL OF STRUT ROD

1. REMOVE STRUT ROD NUT AND RETAINER

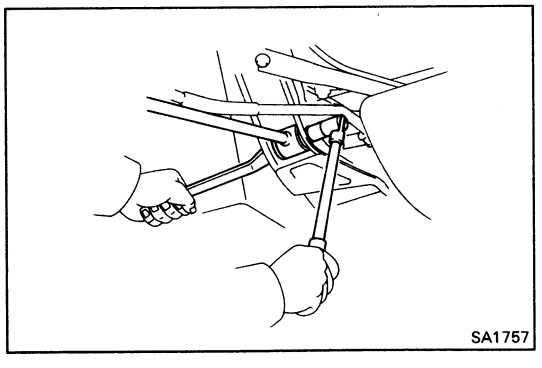

2. REMOVE STRUT ROD

(a) Remove the strut rod holding nut.

(b) Remove the cushion collar and retainer from the strut rod.

INSTALLATION OF STRUT ROD

(See page SA-69)

1. INSTALL REAR SUSPENSION ARM No.1

(a) Install the retainers, cushions, collar and suspension arm No.1 to the strut rod with the nut as shown.

NOTICE:

- **Install the nut to the bolt end.**
- **Do not misinstall the front and rear cushions.**

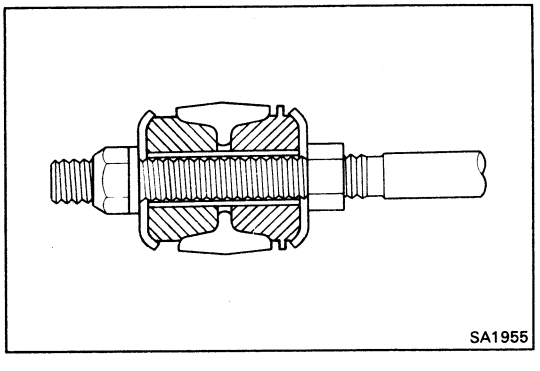

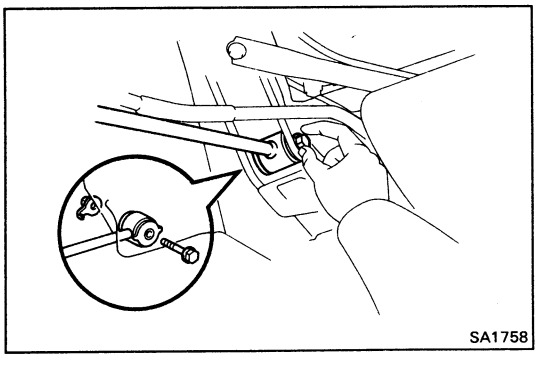

(c) Temporarily install the strut rod holding bolt and nut and cushion to the body.

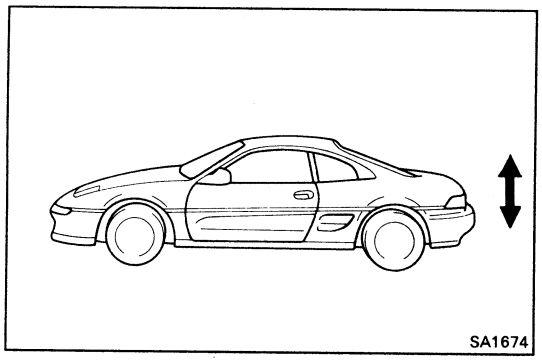
SA1674

2. **INSTALL WHEEL AND LOWER VEHICLE**

Rock the vehicle up and down to stabilize the suspension.

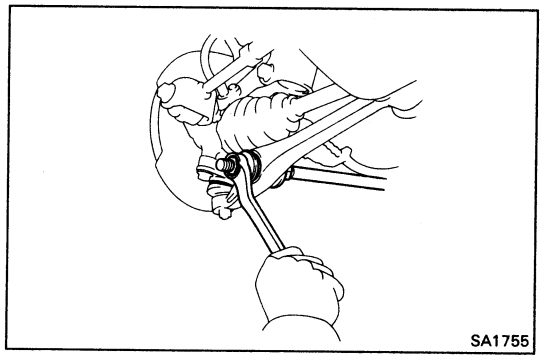
SA1755

3. **TIGHTEN STRUT ROD INSTALLATION NUT**

Tighten the strut rod installation nut of the lower arm side.

Torque: 1,200 kg-cm (87 ft-lb, 118 N·m)

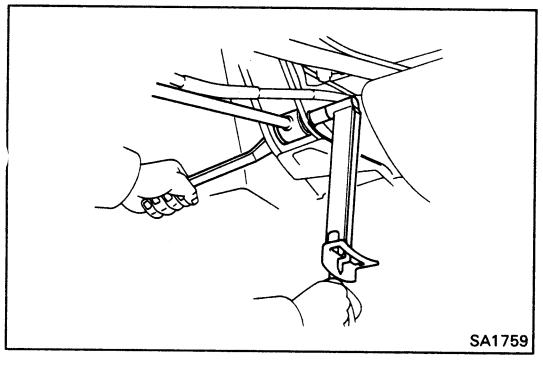
SA1759

4. **TIGHTEN STRUT ROD INSTALLATION BOLT**

Tighten the strut rod installation bolt of the body side.

Torque: 1,200 kg-cm (87 ft-lb, 118 N·m)

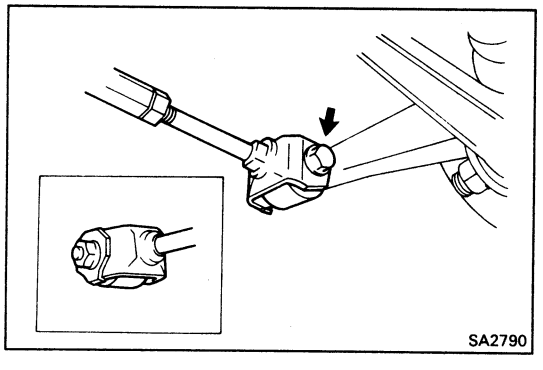
SA2790

Suspension Arm

(See page SA-69)

REMOVAL OF SUSPENSION ARM

1. **DISCONNECT SUSPENSION ARM**

Loosen the bolt and nut.

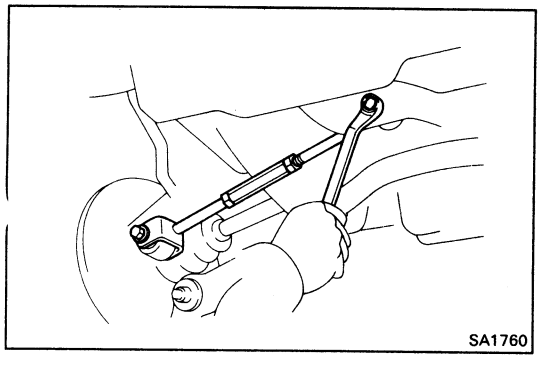
SA1760

2. **REMOVE SUSPENSION ARM FROM BODY**

(a) Remove the suspension arm holding bolt.

(b) Disconnect the suspension arm from the body.

(c) Remove the bolt, nut and suspension.

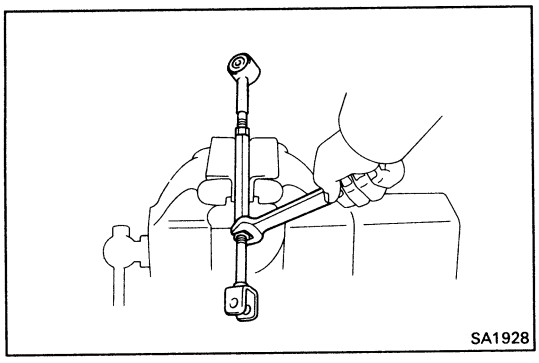
SA1928

DISASSEMBLY OF SUSPENSION ARM NO.1

(See page SA-69)

DISASSEMBLE SUSPENSION ARM

(a) Loosen the tie rod adjusting tube two nuts.

(b) Turn the tie rod adjusting tube, and remove the tie rod end and the suspension arm No.2.

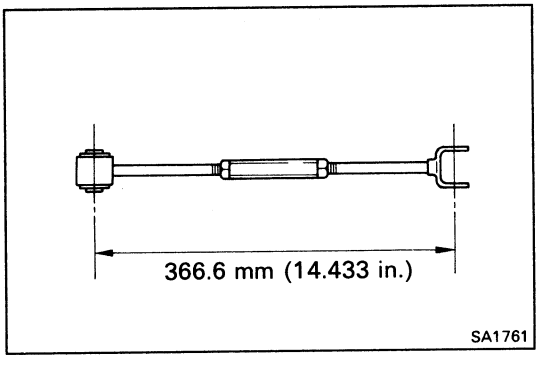

SA1761

ASSEMBLY OF SUSPENSION ARM

(See page SA-69)

INSTALL TIE ROD END AND SUSPENSION ARM TO TIE ROD TUBE

(a) Install the tie adjustting tube, tie rod adjsuting tube nuts, tie rod end and rear suspension arm No.2. tie rod tube.

(b) Adjust the rear suspension arm No.2.

(c) Temporarily tighten the tie rod adjusting tube nut.

HINT: Fully tighten after adjusting the rear wheel alignment.

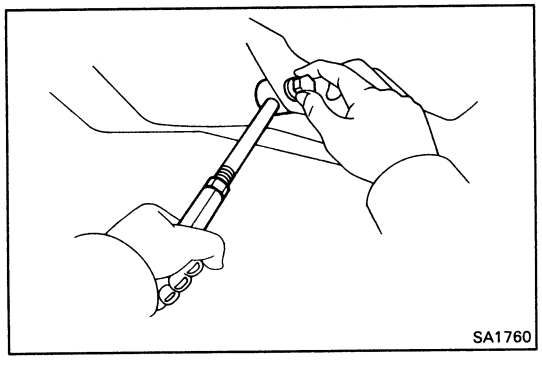
SA1760

INSTALLATION OF SUSPENSION ARM

(See page SA-69)

1. INSTALL SUSPENSION ARM TO BODY

Temporarily connect the suspension arm to the body with the bolt.

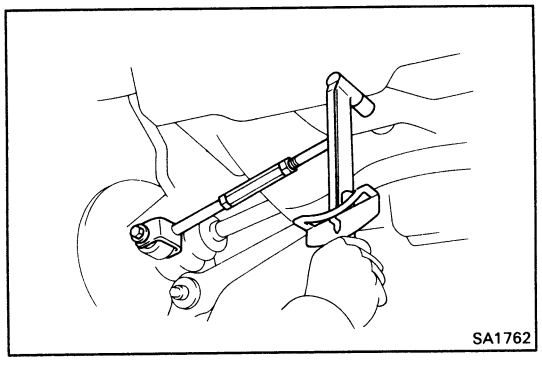
SA1762

2. INSTALL SUSPENSION ARM TO REAR AXLE CARRIER

Install the suspension arm to the rear axle carrier with the bolt and nut.

Torque: 1,050 kg-cm (76 ft-lb, 103 N·m)

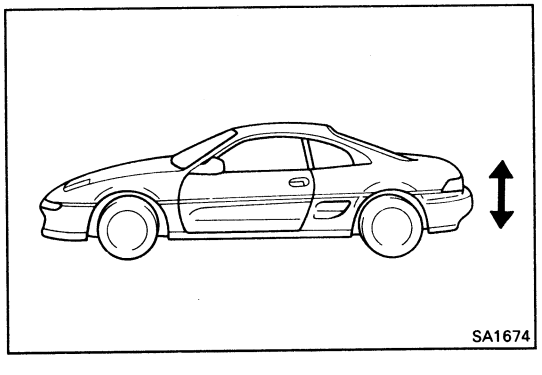
SA1674

3. INSTALL WHEEL AND LOWER VEHICLE

(a) Install the wheel and lower the vehicle.

(b) Bounce the vehicle up and down to stabilize the suspension.

4. TORQUE SUSPENSION ARM HOLDING BOLT

Torque: 1,050 kg-cm (76 ft-lb, 103 N·m)

5. INSPECT REAR WHEEL ALIGNMENT

(See page SA-6)

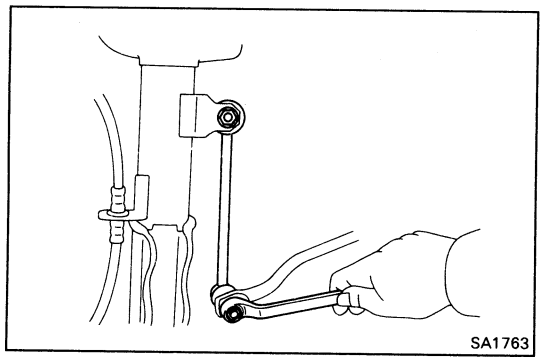
SA1763

Rear Stabilizer Bar and Link

(See page SA-69)

REMOVAL OF STABILIZER BAR

1. **DISCONNECT STABILIZER LINK FROM STABILIZER BAR**

   Remove the nuts and remove the stabilizer link from the stabilizer bar.

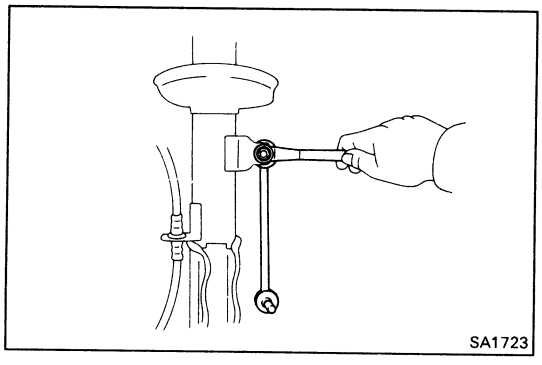
SA1723

2. **REMOVE STABILIZER LINK**

   Remove the stabilizer link from the shock absorber.

   HINT: If the ball joint stud turns together with the nut, use a hexagon wrench 5 mm (0.197 in.) to hold the stud.

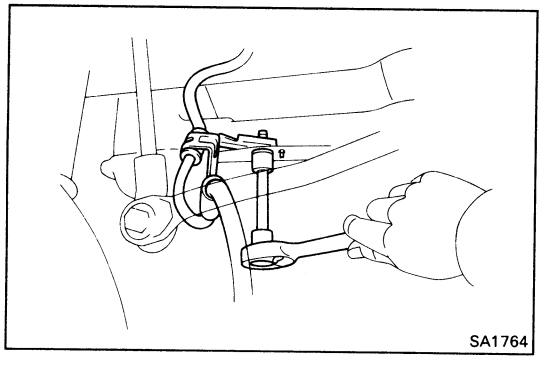
SA1764

3. **(w/ ABS)**
   REMOVE SPEED SENSOR BRACKET

   Remove the bolt and disconnect the speed sensor bracket from the rear suspension crossmember.

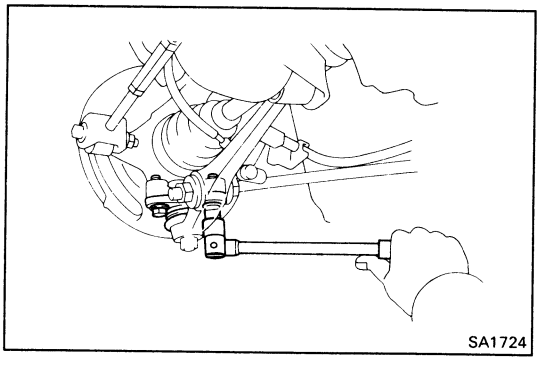
SA1724

4. **DISCONNECT REAR AXLE CARRIER FROM LOWER ARM**

   (a) Remove the two bolts holding the lower arm to ball joint.

   (b) Disconnect the ball joint.

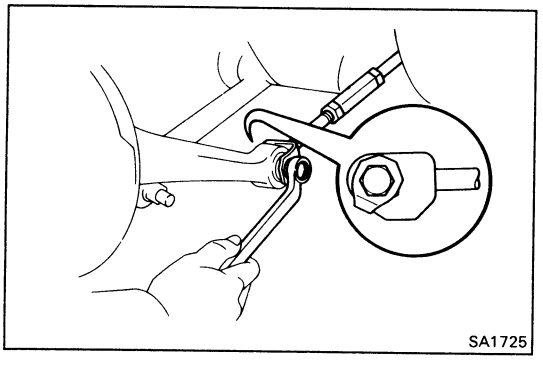
SA1725

5. **DISCONNECT REAR AXLE CARRIER FROM SUSPENSION ARM**

   Disconnect the suspension arm from the rear axle carrier.

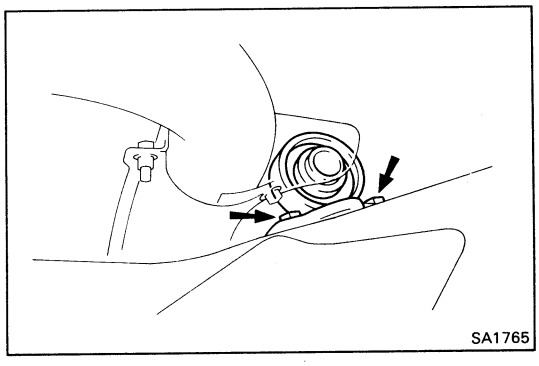

6. DISCONNECT EXHAUST PIPE MOUNTING FROM REAR SUSPENSION CROSSMEMBER

Remove the two exhaust pipe mounting installation bolts.

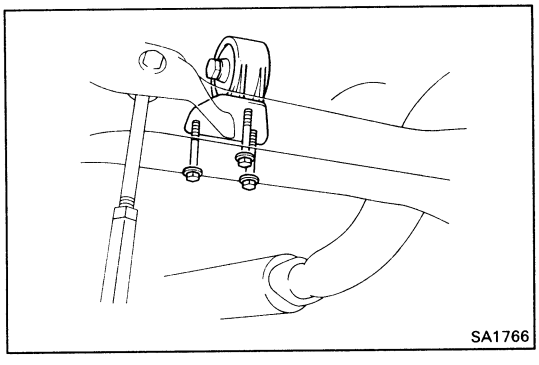

7. DISCONNECT REAR ENGINE MOUNT FROM REAR SUSPENSION CROSSMEMBER

Remove the three installation bolts of the rear engine mounting.

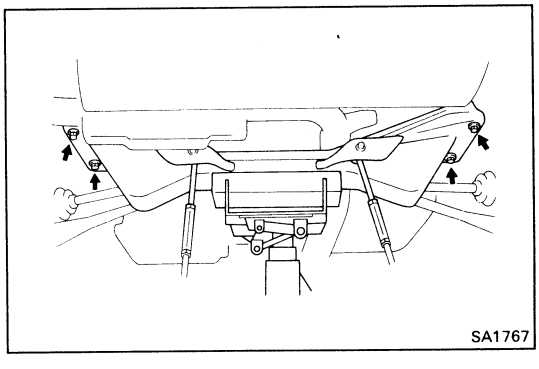

8. REMOVE SUSPENSION CROSSMEMBER MOUNTING BOLTS

(a) Hold the rear suspension crossmember with a jack.

(b) Remove the four bolts, then remove the rear suspension crossmember.

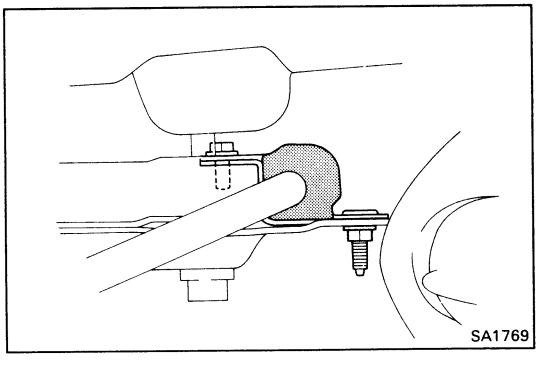

9. REMOVE STABILIZER BAR

(a) Lift down the crossmember until the front side bolt of the stabilizer bar bracket can be removed.

HINT: Be careful not to damage the exhaust pipe by shoving with the stabilizer bar.

(b) Remove the two bolts and two nuts.

(c) Remove the stabilizer bar with brackets.

(d) Remove the brackets and cushions from the stabilizer bar.

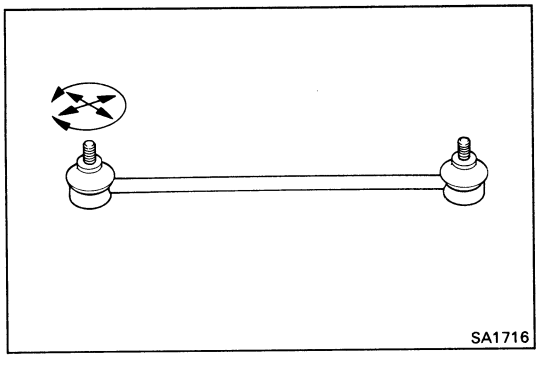

INSPECTION OF STABILIZER LINK

INSPECT STABILIZER LINK

Rotate the ball joint arm in all directions, if the movement is not smooth and free, replace the stabilizer link.

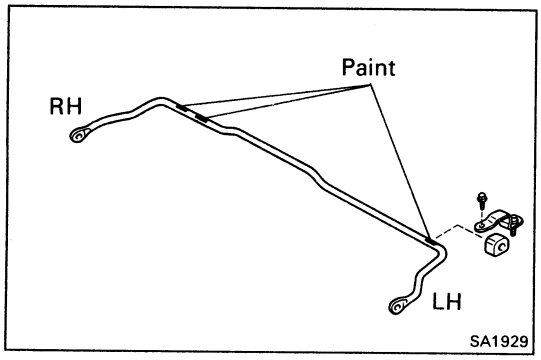

INSTALLATION OF STABILIZER BAR

(See page SA-69)

1. **INSTALL STABILIZER BAR**
   (a) Install the cushions and brackets touching the line painted on the stabilizer bar.
   (b) Install the stabilizer bar to the rear suspension crossmember and tighten the bracket bolts.
   Torque: 195 kg-cm (14 ft-lb, 19 N·m)

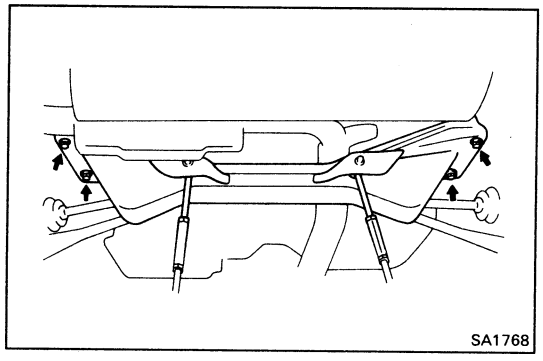

2. **INSTALL SUSPENSION CROSSMEMBER**
   Install the suspension crossmember in place, then install and tighten the four bolts.
   Torque: 1,150 kg-cm (83 ft-lb, 113 N·m)

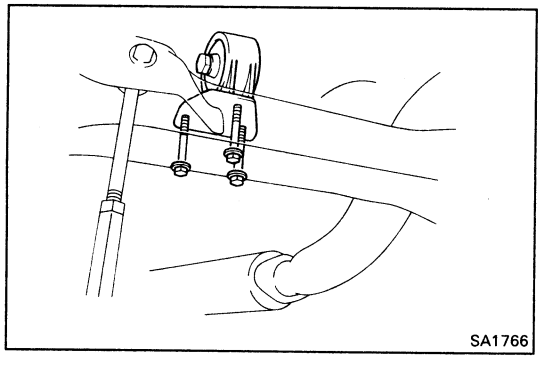

3. **CONNECT REAR ENGINE MOUNTING TO REAR SUSPENSION CROSSMEMBER**
   Connect the engine mount to rear suspension crossmember in place with the three bolts.
   Torque: 790 kg-cm (57 ft-lb, 77 N·m)

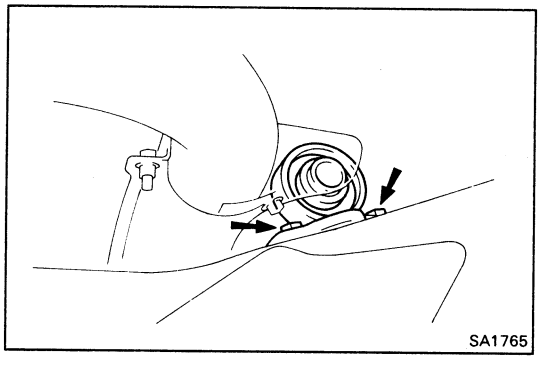

4. **CONNECT EXHAUST PIPE MOUNTING TO REAR SUSPENSION CROSSMEMBER**
   Torque: 210 kg-cm (15 ft-lb, 21 N·m)

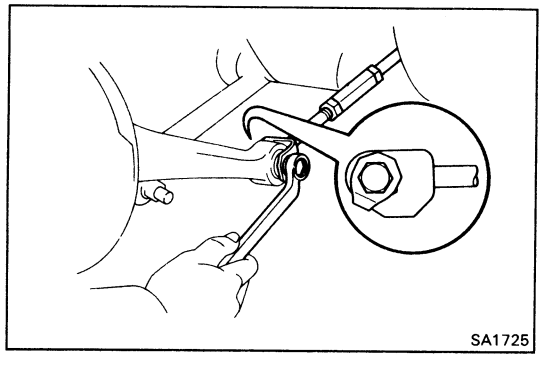

5. **CONNECT SUSPENSION ARM TO REAR AXLE CARRIER**
   (a) Connect the suspension arm to the rear axle carrier with the bolt and nut.

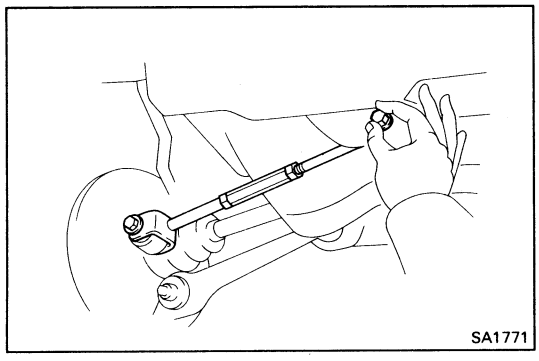

(b) Similarly connect the other side suspension arm.

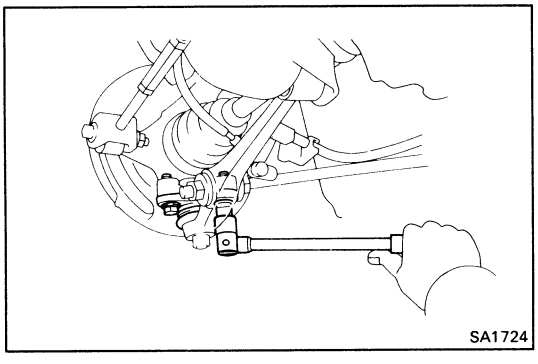

6. INSTALL REAR AXLE CARRIER TO LOWER ARM

Torque: 1,150 kg-cm (83 ft-lb, 113 N·m)

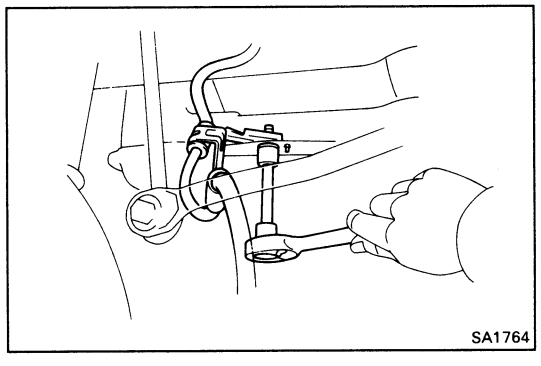

7. (w/ ABS)
INSTALL ABS SPEED SENSOR BRACKET TO REAR SUSPENSION CROSSMEMBER

Install the ABS speed sensor bracket to the rear suspension crossmember.

Torque: 55 kg-cm (48 in.-lb, 5.4 N·m)

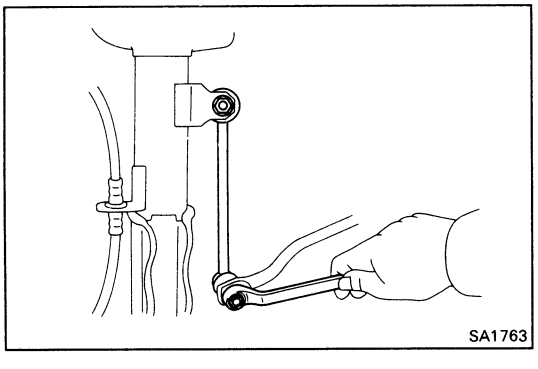

8. INSTALL STABILIZER LINK

Install the stabilizer link with the nuts.

Torque: 500 kg-cm (36 ft-lb, 49 N·m)

HINT: If the ball joint stud together with the nut, use hexagon wrench 5 mm (0.197 in.) to hold the stud.

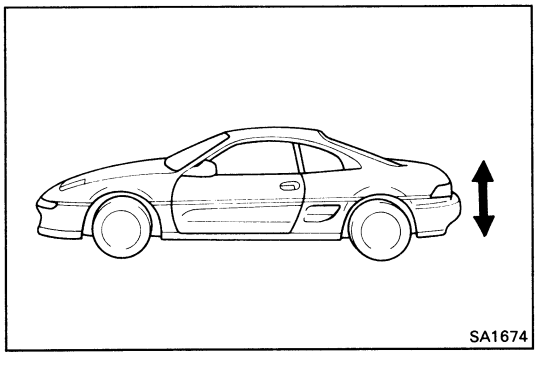

9. INSTALL WHEEL AND LOWER VEHICLE

Rock the vehicle up and down to stabilize the suspension.

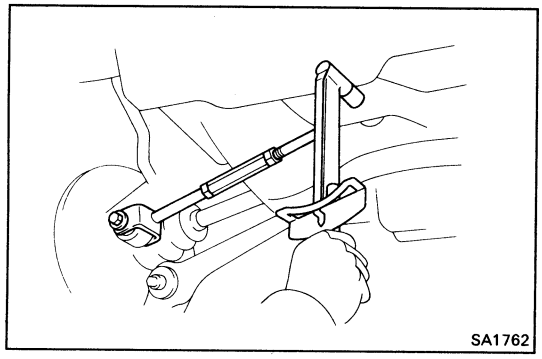
SA1762

10. TIGHTEN SUSPENSION ARM INSTALLATION BOLTS

(a) Tighten the crossmember side bolt.

Torque: 1,050 kg-cm (76 ft-lb, 103 N·m)

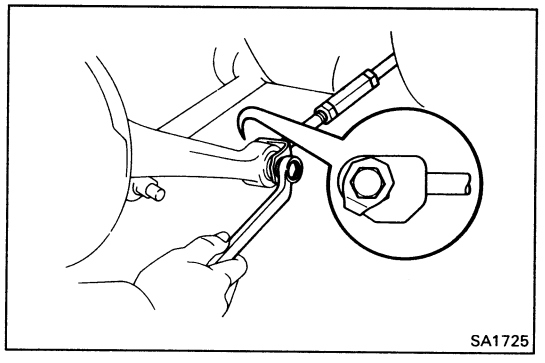
SA1725

(b) Tighten axle carrier side bolt.

Torque: 1,050 kg-cm (76 ft-lb, 103 N·m)

Engine Lateral Control Rod

COMPONENTS

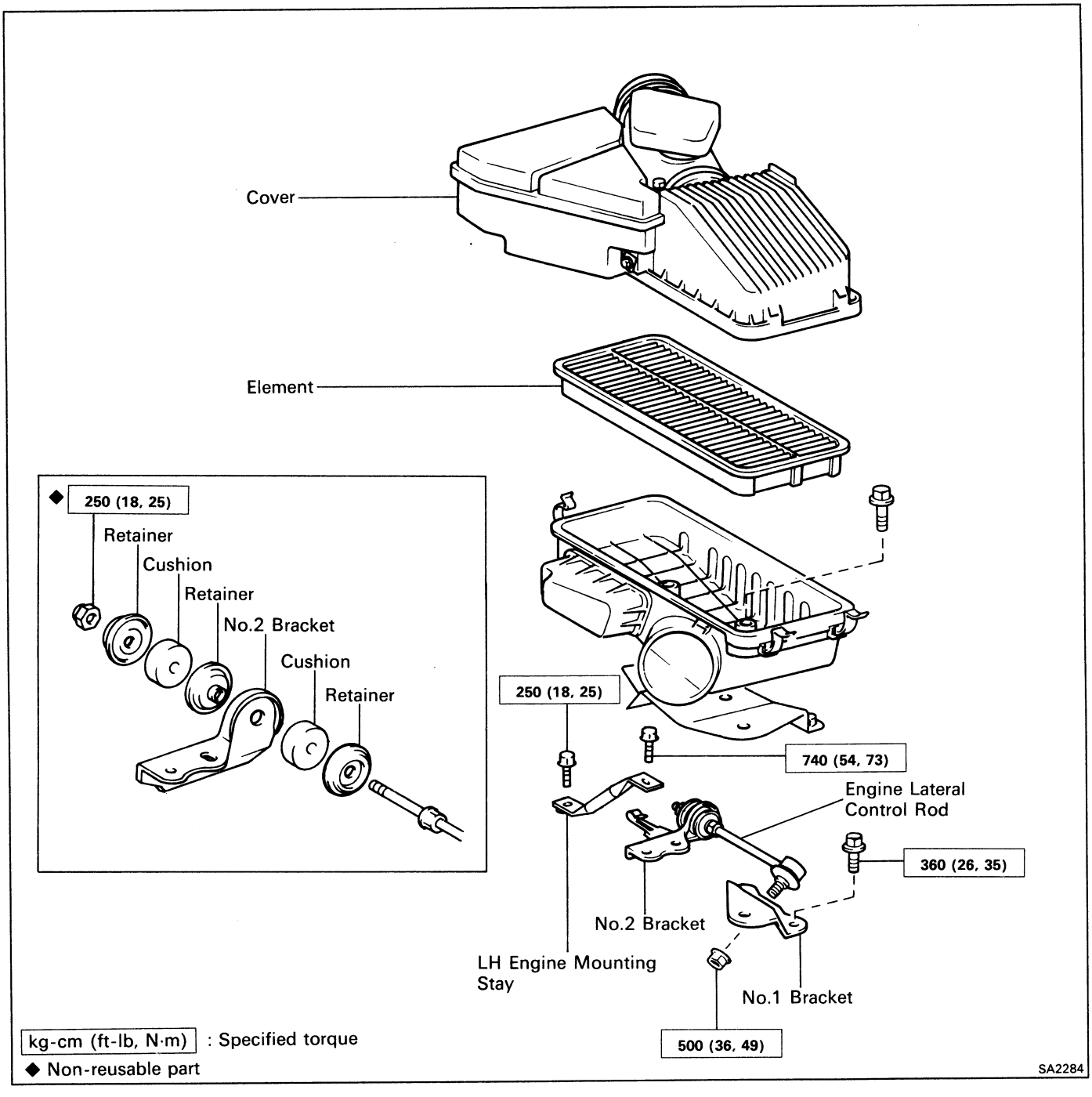

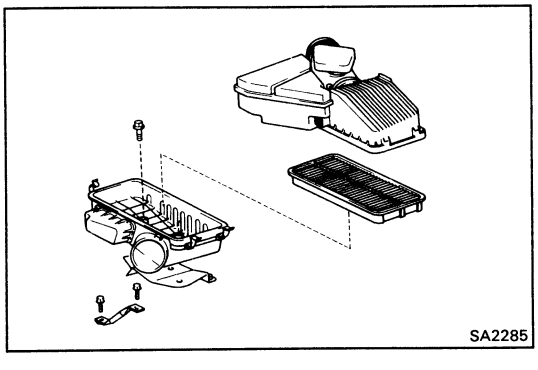

REMOVAL OF ENGINE LATERAL CONTROL ROD

1. REMOVE AIR CLEANER ASSEMBLY
2. REMOVE LH ENGINE MOUNTING STAY

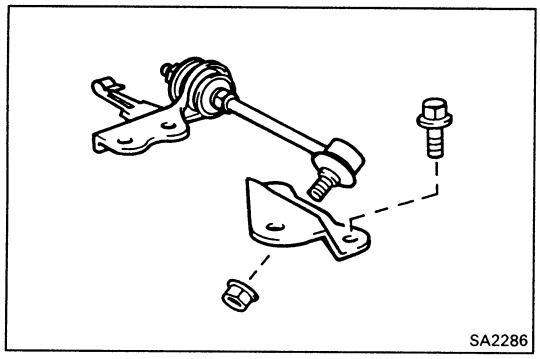

3. REMOVE ENGINE LATERAL CONTROL ROD

(a) Remove the engine lateral control rod with the No.1 and No.2 brackets.

(b) Remove the engine lateral control rod from the engine No.1 lateral control rod brackets.

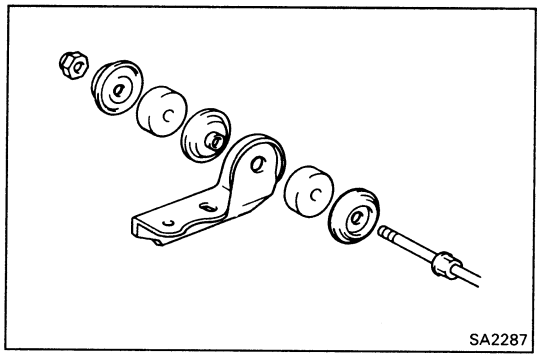

4. DISASSEMBLE ENGINE LATERAL CONTROL ROD

Remove the following parts.

- Nut
- Three retainers
- Two cushions
- No.2 bracket

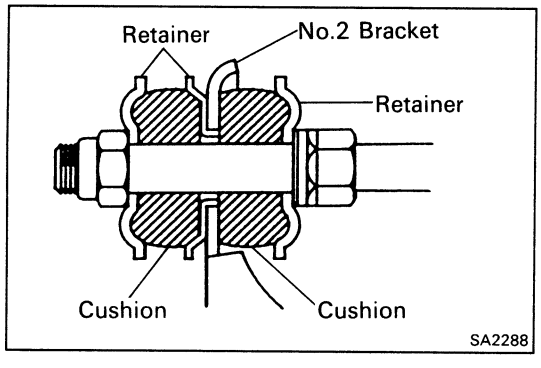

INSTALLATION OF LATERAL CONTROL ROD

1. ASSEMBLE ENGINE LATERAL CONTROL ROD

Assemble the parts in the correct direction as shown.

Torque: 250 kg-cm (18 ft-lb, 25 N·m)

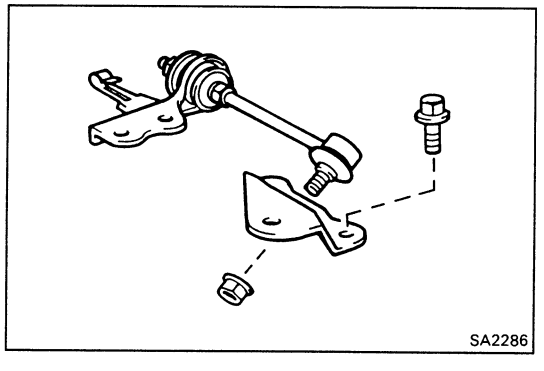

2. INSTALL ENGINE LATERAL CONTROL ROD

(a) Install the No.1 bracket to the control rod.

Torque: 500 kg-cm (36 ft-lb, 49 N·m)

(b) Install the control rod in place and torque the No.1 bracket installation bolts.

Torque: 360 kg-cm (26 ft-lb, 35 N·m)

(c) Install and torque the No.2 bracket installation bolt.

Torque: 740 kg-cm (54 ft-lb, 73 N·m)

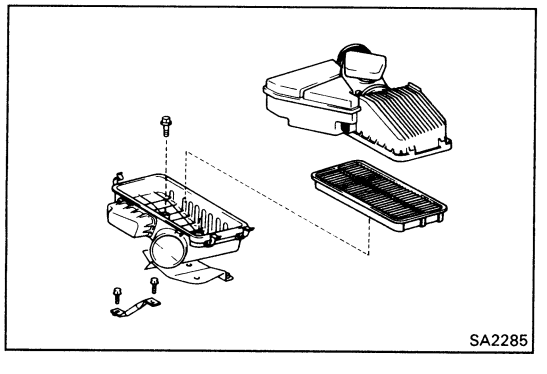

3. INSTALL LH ENGINE MOUNTING STAY

Torque:

No.2 bracket side	**740 kg-cm (54 ft-lb, 73 N·m)**
Body side	**250 kg-cm (18 ft-lb, 25 N·m)**

4. INSTALL AIR CLEANER ASSEMBLY

BRAKE SYSTEM

	Page
PRECAUTIONS	BR-2
TROUBLESHOOTING	BR-2
CHECKS AND ADJUSTMENTS	BR-5
MASTER CYLINDER	BR-8
BRAKE BOOSTER	BR-14
FRONT BRAKE	BR-16
PE36T DISC (For 3S-GTE)	BR-17
PD51 DISC (For 5S-FE)	BR-25
REAR BRAKE	BR-33
PROPORTIONING AND BY-PASS VALVE (P & BV)	BR-47
ANTI-LOCK BRAKE SYSTEM (ABS)	BR-48
Description	BR-48
Diagnosis System	BR-51
Troubleshooting	BR-55
Speed Sensor Diagnosis System	BR-61
ABS Actuator	BR-65
Control Relays	BR-69
Front Speed Sensor	BR-70
Rear Speed Sensor	BR-72
Anti-Lock Brake System Circuit	BR-74

PRECAUTIONS

1. **Care must be taken to replace each part properly as it could affect the performance of the brake system and result in a driving hazard. Replace the parts with parts of the same part number of equivalent.**

2. **It is very important to keep parts and the area clean when repairing the brake system.**

TROUBLESHOOTING

Problem	Possible cause	Remedy	Page
Low or spongy pedal	Brake pads worn	Replace pads	BR-17, 25, 33
	Leak in brake system	Repair leak	
	Master cylinder faulty	Repair or replace master cylinder	BR-9
	Air in brake system	Bleed brake system	BR-7
	Brake cylinder faulty	Repair cylinder	BR-17, 25, 33
	Piston seals worn or damaged	Repair brake cylinder	BR-17, 25, 33
	Rear brake automatic adjuster faulty	Repair or replace adjuster	
Brakes drag	Parking brake out of adjustment	Adjust parking brake	BR-7
	Binding parking brake wire	Repair as necessary	
	Booster push rod out of adjustment	Adjust push rod	BR-16
	Brake line restricted	Repair as necessary	
	Pad cracked or distorted	Replace pad	BR-17, 25, 33
	Caliper piston sticking	Repair as necessary	BR-17, 25, 33
	Adjuster broken	Replace adjuster	
	Master cylinder faulty	Repair or replace master cylinder	BR-9
Brakes pull	Tires improperly inflated	Inflate tires to proper pressure	
	Oil or grease on pads	Check for cause. Replace shoes	
	Brake pads distorted, worn or glazed	Replace pads	BR-17, 25, 33
	Disc out of round	Replace disc	BR-30, 40
	Brake cylinder faulty	Repair cylinder	BR-17, 25, 33
	Piston frozen in brake cylinder	Repair cylinder	BR-17, 25, 33
	Brake pad sticking	Replace pads	BR-17, 25, 33

TROUBLESHOOTING (Cont'd)

Problem	Possible cause	Remedy	Page
Hard pedal but brakes inefficient	Oil or grease on shoes or pads	Check for cause. Replace pads	BR-17, 25, 33
	Brake pads distorted, worn or glazed	Replace pads	BR-17, 25, 33
	Piston frozen in brake cylinder	Repair cylinder	BR-17, 25, 33
	Brake booster faulty	Replace booster	BR-15
	Vacuum leaks	Repair as necessary	
	Brake line restricted	Repair as necessary	
Snapping or clicking noise when brakes are applied	Loose or missing pad support plate	Replace pad support plate	BR-17, 25, 33
	Loose installation bolt	Tighten	BR-17, 25, 33
Scraping or grinding noise when brakes are applied	Worn brake pads	Replace or refinish rotors if heavily scored	BR-17, 25, 33
	Caliper to rotor interference	Replace as required	BR-17, 25, 33
	Dust cover to rotor or backing plate to drum interference	Correct or replace	BR-17, 25, 33
	Other brake system components faulty	Repair or replace as necessary	
	Tires rubbing against chassis and/or body	Repair as necessary	
Groaning, clicking or rattling noise when brakes are not applied	Stones or foreign material trapped inside wheel covers	Remove foreign material	
	Loose wheel nuts	Tighten to correct torque	
		Replace if stud holes are elongated	
	Mal-adjustment of brake pedal or booster push rod	Inspect and adjust	BR-5, 16
	Worn, damaged or dry wheel bearings	Inspect and lubricate or replace	
	Loose or missing anti-rattle spring or pad support plate or crimping on outer pad	Inspect, repair or replace	BR-17, 25, 33
	Failure of shim	Inspect, replace if necessary	BR-17, 25, 33
	Wear on slide bushing	Inspect, replace if necessary	BR-17, 25, 33
	Loose installation bolt	Inspect, tighten is necessary	BR-17, 25, 33
	Poor return of piston	Inspect, repair or replace	BR-17, 25, 33
Squealing and squeaking noise when brakes are not applied	Mal-adjustment of brake pedal or booster push rod	Inspect and adjust	BR-5, 16
	Poor return of brake booster or master cylinder or cylinder	Inspect, repair or replace	BR-9, 14
	Rusted or stuck piston	Inspect and lubricate as necessary	BR-17, 25, 33
	Improper positioning of pad in caliper	Repair or replace	BR-17, 25, 33
	Rotor rubbing against caliper housing	Repair or replace	BR-17, 25, 33
	Improper installation of disc brake pad support plate	Repair or replace	BR-17, 25, 33
	Other brake system components	Inspect, repair or replace as necessary	
	Loose or extra parts in brakes		
	Worn, damaged or insufficiently		
	lubricated wheel bearings		

TROUBLESHOOTING (Cont'd)

Problem	Possible cause	Remedy	Page
Squeaking, squealing groaning or chattering noise when brakes are applied Note: Brake friction materials inherently generate noise and heat in order to dissipate energy. As a result, occasional squeal is normal and is aggravated by severe environmental conditions such as cold, heat, wetness, snow, salt, mud, etc. This occasional squeal is not a functional problem and does not indicate any loss of brake effectiveness	Rotors and pads worn or scored	Inspect, repair or replace	BR-17, 25, 33
	Dirty, greased, contaminated or glazed pads	Clean or replace	BR-17, 25, 33
	Improper pads using	Inspect for correct usage or replace	BR-17, 25, 33
	Mal-adjustment of brake pedal or booster push rod	Inspect and adjust	BR-5, 16
	Missing or damaged brake pad anti-squeal shim	Replace	BR-17, 25, 33
	Burred or rusted calipers	Clean or deburr	BR-17, 25, 33

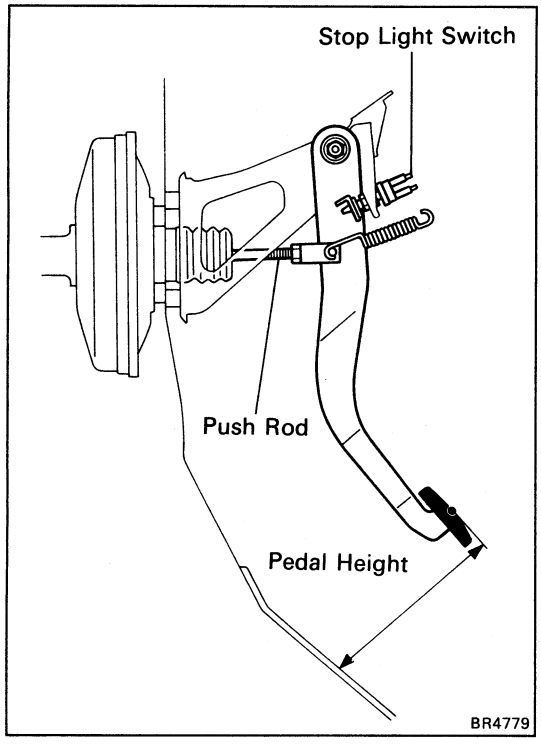

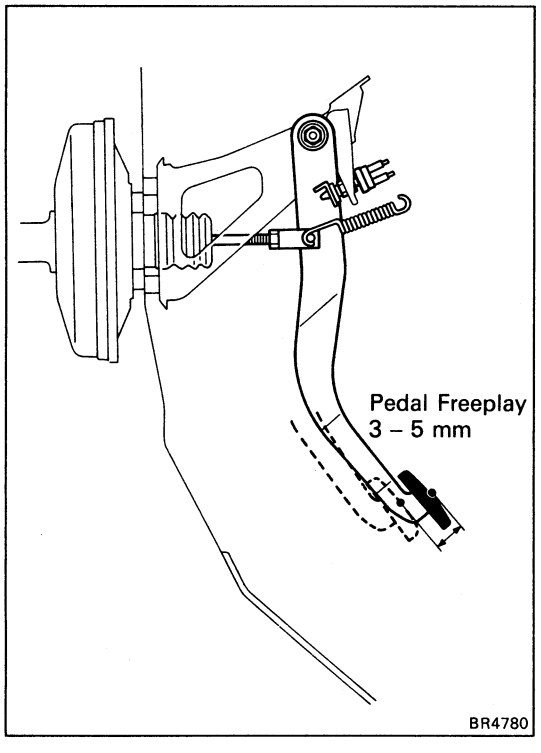

CHECKS AND ADJUSTMENTS

CHECK AND ADJUSTMENT OF BRAKE PEDAL

1. CHECK THAT PEDAL HEIGHT IS CORRECT, AS SHOWN

Pedal height from asphalt sheet:
177 – 187 mm (6.968 – 7.362 in.)

If the pedal height is incorrect, adjust it.

2. IF NECESSARY, ADJUST PEDAL HEIGHT

(a) Disconnect the connector from the stop light switch.

(b) Loosen the stop light switch lock nut.

(c) Sufficiently loosen the stop light switch.

(d) Loosen the push rod lock nut.

(e) Adjust the pedal height by turning the pedal push rod.

(f) Return the stop light switch until it lightly contact the pedal stopper.

(g) Tighten the lock nut and connect the connector to the stop light switch.

(h) Check that the stop lights light when the brake pedal is depressed.

(i) After adjusting the pedal height, check and adjust the pedal freeplay.

3. CHECK THAT PEDAL FREEPLAY IS CORRECT, AS SHOWN

(a) Stop the engine and depress the brake pedal several times until there is no more vacuum left in the booster.

(b) (Single booster)
Push in the pedal until the beginning of resistance is felt. Measure the distance, as shown.

(Tandem booster)
Push in the pedal until the beginning of the second resistance is felt. Measure the distance, as shown.

Pedal freeplay: 3 – 5 mm (0.12 – 0.20 in.)

(Tandem booster)

HINT: The freeplay to the first resistance is due to the play between the clevis and pin. And it is 1 – 3 mm (0.04 – 0.12 in.) on the pedal.

4. IF NECESSARY, ADJUST PEDAL FREEPLAY

(a) If incorrect, adjust the pedal freeplay by turning the pedal push rod.

(b) Start the engine and confirm that there is pedal freeplay.

(c) After adjusting the pedal freeplay, check the pedal height.

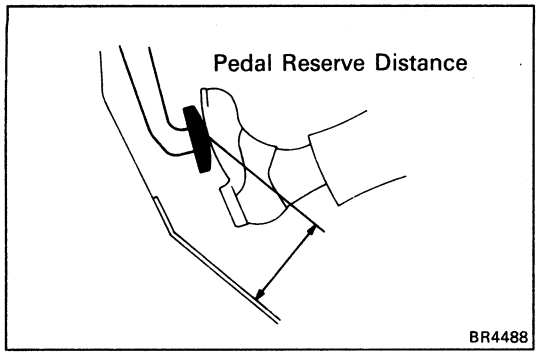

5. CHECK THAT PEDAL RESERVE DISTANCE IS CORRECT, AS SHOWN

Release the parking brake.

With the engine running, depress the pedal and measure the pedal reserve distance, as shown.

Pedal reserve distance from asphalt sheet at 50 kg (110.2 lb, 490 N):

More than 117 mm (4.61 in.)

If the reserve distance is incorrect, troubleshoot the brake system.

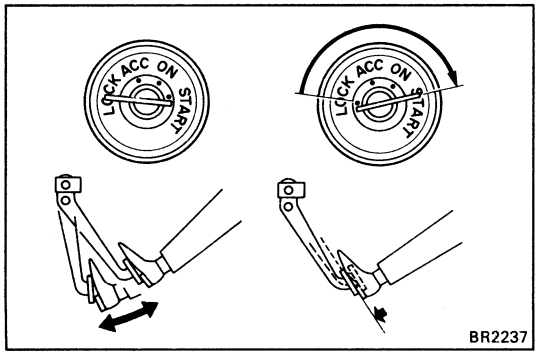

OPERATIONAL TEST OF BRAKE BOOSTER

1. OPERATING CHECK

(a) Depress the brake pedal several times with the engine off and check that there is no change in the pedal reserve distance.

(b) Depress the brake pedal and start the engine. If the pedal goes down slightly, operation is normal.

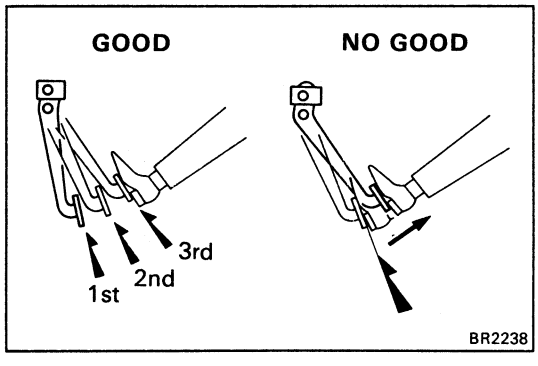

2. AIR TIGHTNESS

(a) Start the engine and stop it after one or two minutes. Depress the brake pedal several times slowly. If the pedal goes down the farthest the first time, but gradually rises after the second or third time, the booster is air tight.

(b) Depress the brake pedal while the engine is running, and stop the engine with the pedal depressed. If there is no change in the pedal reserve travel after holding the pedal for thirty seconds, the booster is air tight.

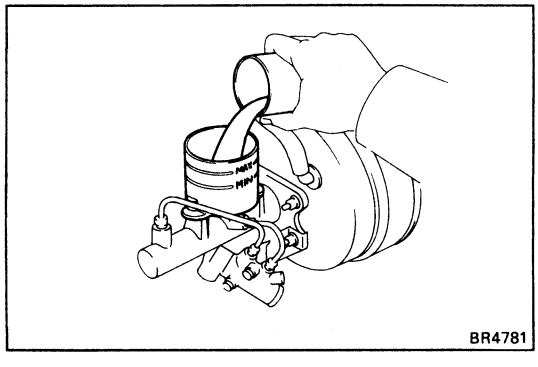

BLEEDING OF BRAKE SYSTEM

HINT: If any work is done one the brake system or if air in the brake lines is suspected, bleed the system of air.

NOTICE: Do not let brake fluid remain on a painted surface. Wash it off immediately.

1. FILL BRAKE RESERVOIR TANK WITH BRAKE FLUID

Fluid: SAEJ1703 or FMVSS No. 116 DOT3

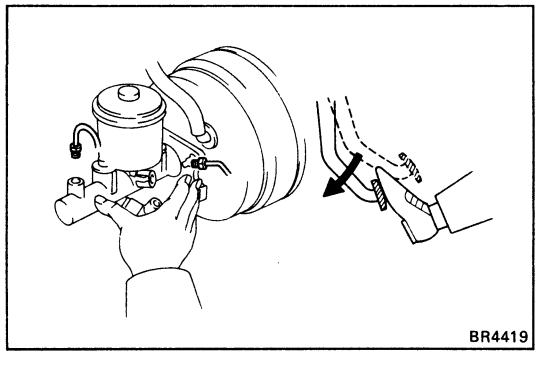

2. BLEED MASTER CYLINDER

HINT: If the master cylinder has been disassembled or if the reservoir tank becomes empty, bleed the air from the master cylinder.

(a) Disconnect the brake tubes from the master cylinder.

(b) Slowly depress the brake pedal and hold it.

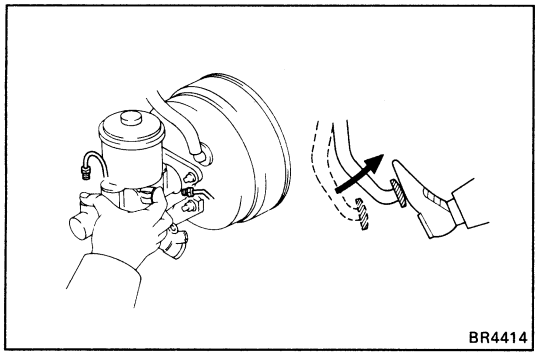
BR4414

(c) Block off the outlet plug with your finger and release the brake pedal.

(d) Repeat (b) and (c) three or four times.

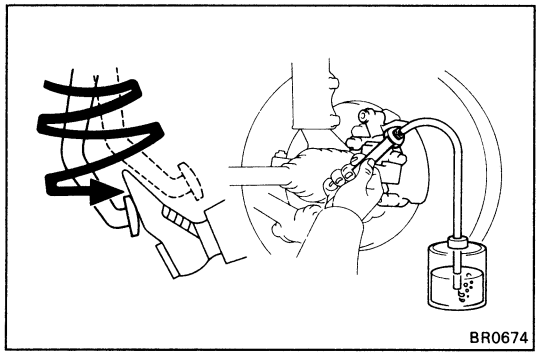
BR0674

3. BLEED BRAKE LINE

(a) Connect the vinyl tube to the brake cylinder.

(b) Depress the brake pedal several times, then loosen the bleeder plug with the pedal held down.

(c) At the point when fluid stops coming out, tighten the bleeder plug, then release the brake pedal.

(d) Repeat (b) and (c) until all the air in the fluid has been bled out.

(e) Repeat the above procedure to bleed the out of the brake line for each wheel.

4. CHECK FLUID LEVEL IN RESERVOIR TANK

Check the fluid level and add fluid if necessary.

Fluid: SAEJ 1703 or FMVSS No. 116 DOT3

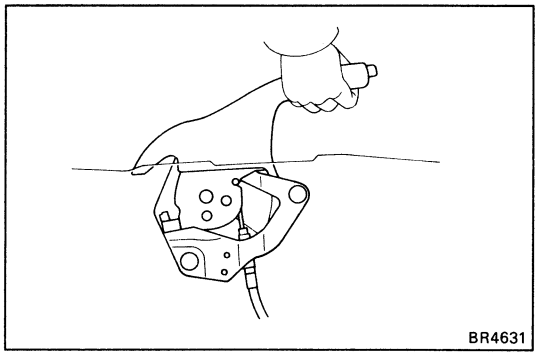
BR4631

CHECK AND ADJUSTMENT OF PARKING BRAKE

1. CHECK THAT PARKING BRAKE LEVER TRAVEL IS CORRECT

(a) Pull the parking brake lever all the way up and down for two or three times. Then return the parking brake lever.

(b) Depress the brake pedal for several times.

(c) Pull the parking brake lever all the way up, and count the notches of lever travel.

Parking brake lever travel
at 20 kg (44.1 lb, 196 N): 5 – 8 clicks

If incorrect, adjust the parking brake.

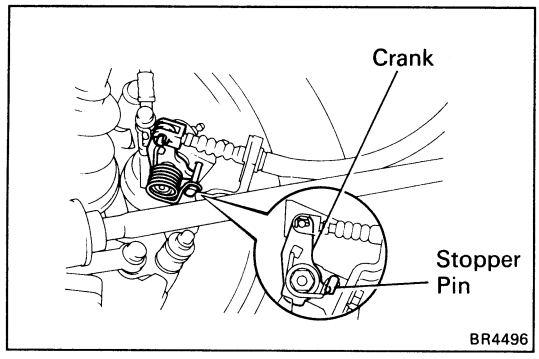

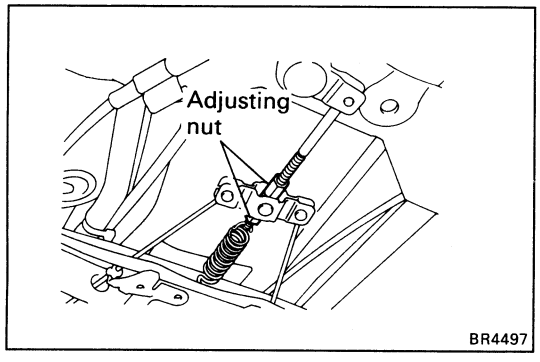

2. IF NECESSARY, ADJUST PARKING BRAKE

(a) Pull the parking brake lever all the way up and down for two or three times. Then return the parking brake lever.

(b) Depress the brake pedal for several times.

(c) Remove the fuel tank protector.

(d) Loosen the adjusting nut and brake cable, and check that the parking brake crank touches stopper pin.

(e) Stretch the brake cable by turning the adjusting nut before the parking brake crank begin moving.

(f) Tighten the adjusting nuts.

HINT: Tighten the adjusting nuts so the equalizer is horizontal to the ground.

Torque: 160 kg-cm (12 ft-lb, 16 N·m)

(g) Install the fuel tank protector.

MASTER CYLINDER

REMOVAL OF MASTER CYLINDER

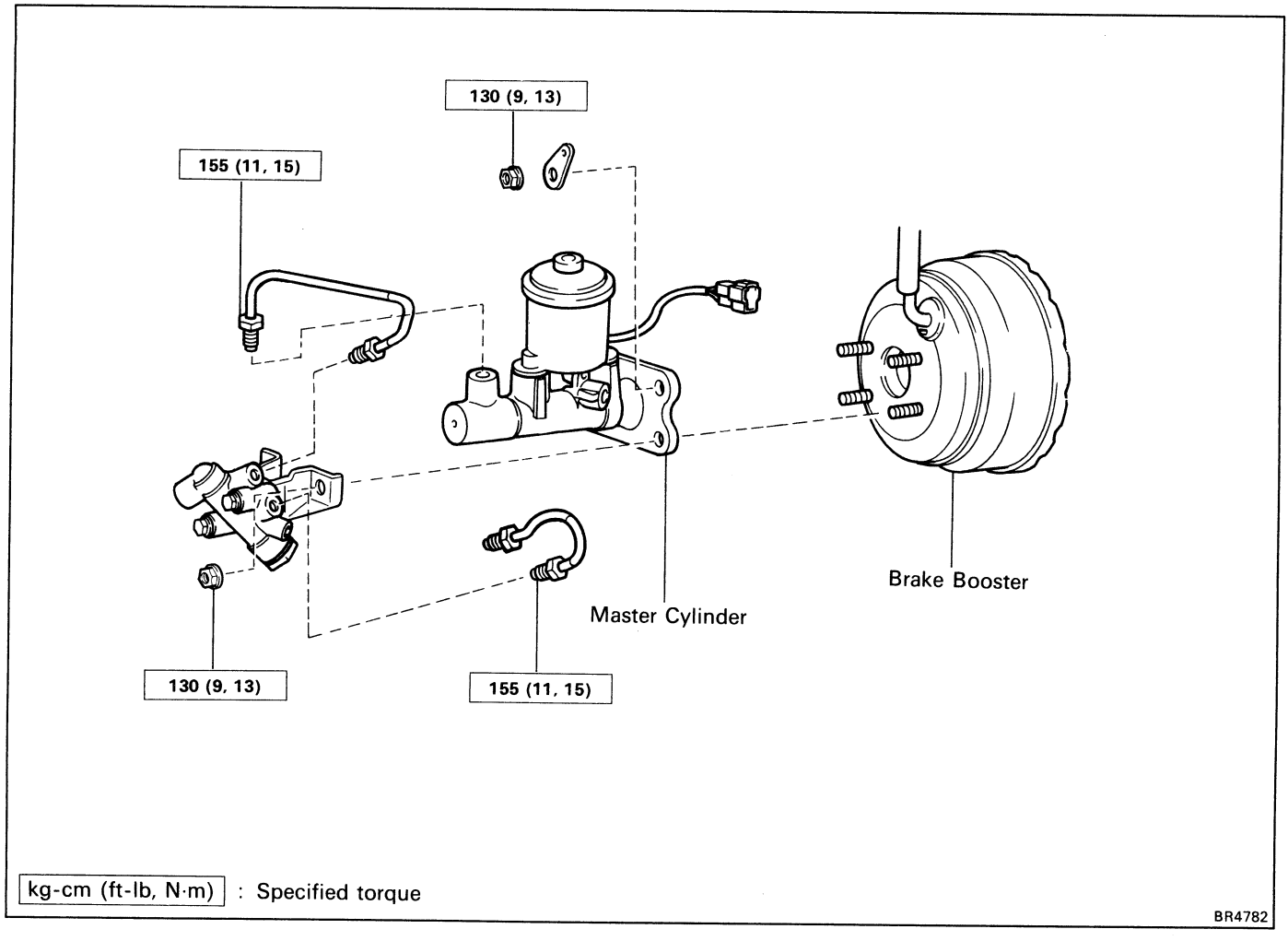

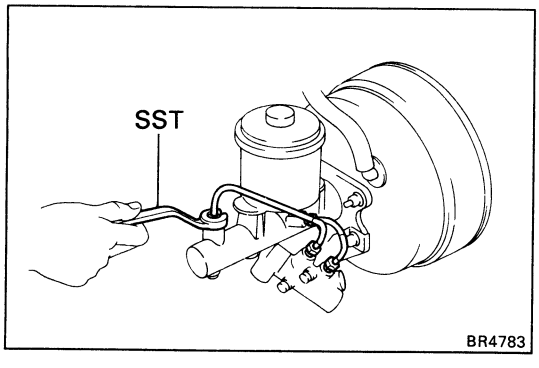

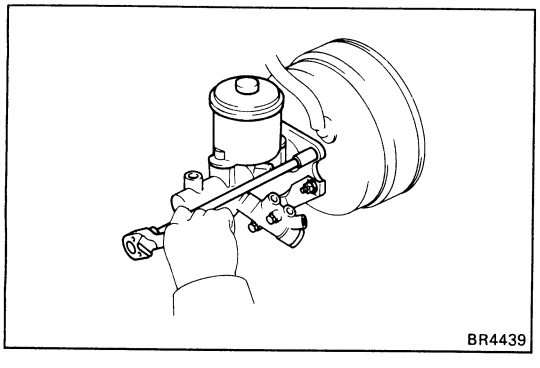

1. **DISCONNECT LEVEL WARNING SWITCH CONNECTOR**

2. **DRAW OUT FLUID WITH SYRINGE**

   NOTICE: Do not let brake fluid remain on a painted surface. Wash it off immediately.

3. **DISCONNECT BRAKE TUBES**

   Using SST, disconnect the brake tubes from the master cylinder.

   SST 09751-36011

4. **REMOVE MASTER CYLINDER**

   (a) Remove the four nuts.

   (b) (w/ABS)
   Remove the P valve with the P valve bracket.

   (c) Remove the master cylinder.

COMPONENTS

w/o ABS

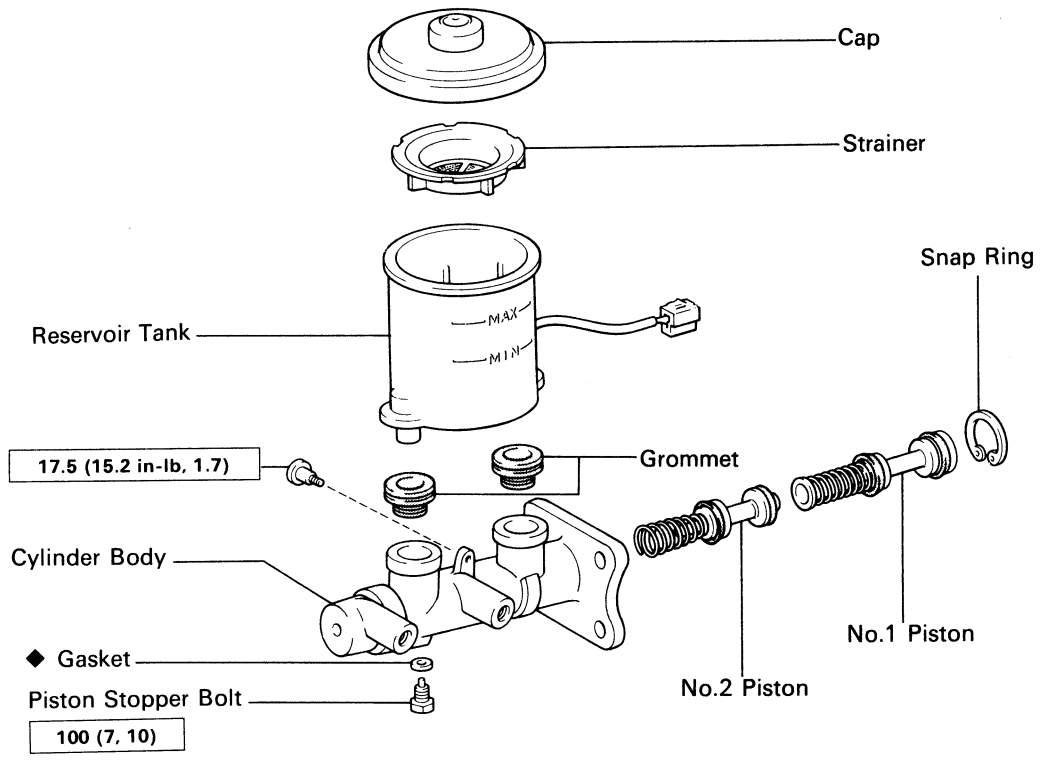

w/ ABS

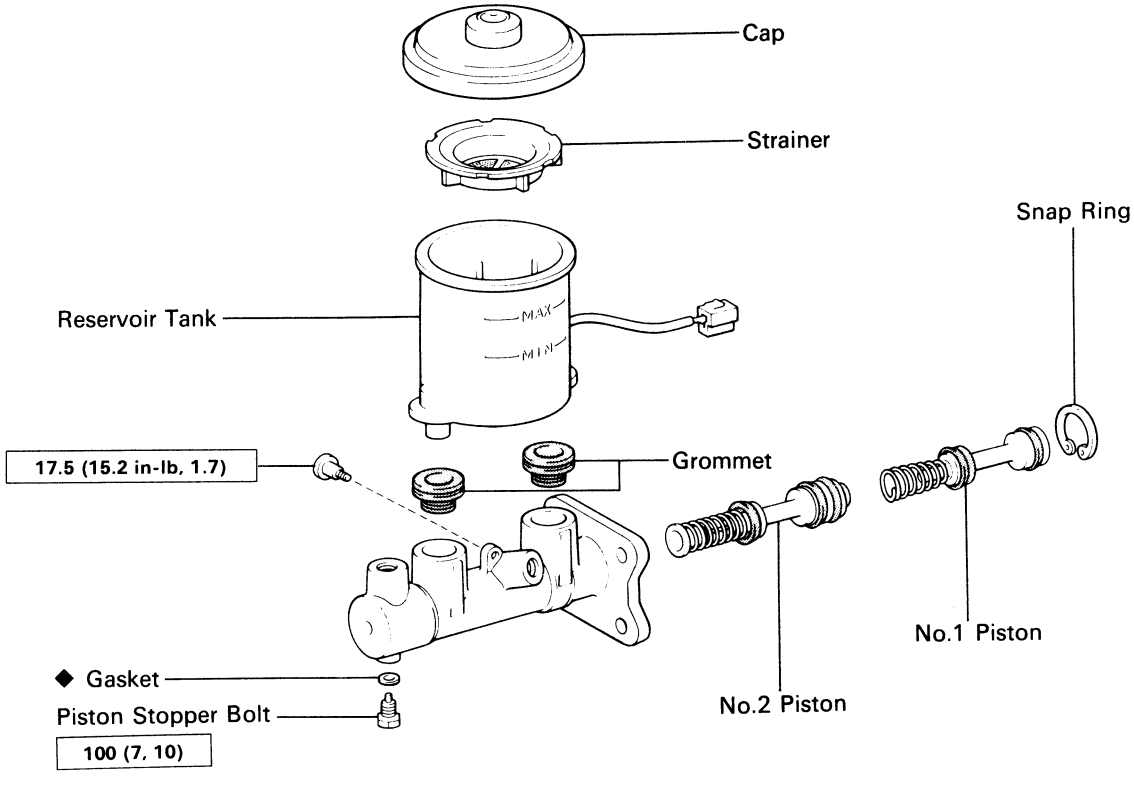

kg-cm (ft-lb, N·m) : Specified torque

◆ Non-reusable part

BR4406
BR4407

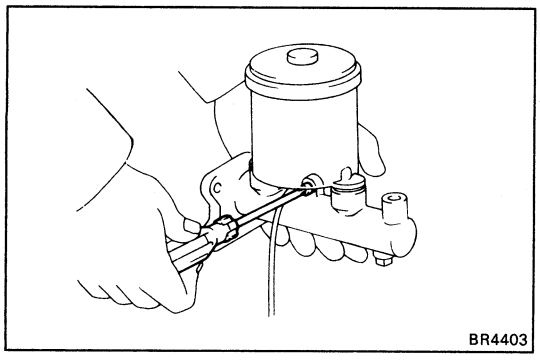
BR4403

DISASSEMBLY OF MASTER CYLINDER

1. REMOVE RESERVOIR TANK

(a) Remove the set screw and pull out the reservoir tank.

(b) Remove the cap and strainer from the reservoir tank.

2. REMOVE TWO GROMMETS

3. PLACE CYLINDER IN VISE

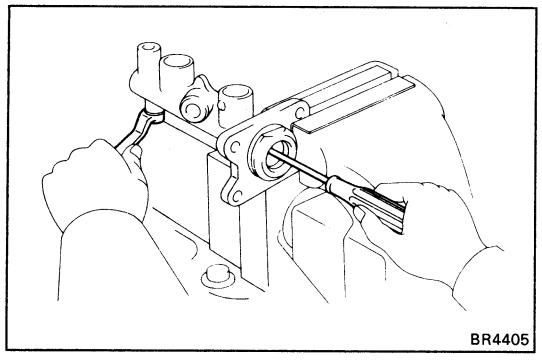
BR4405

4. REMOVE PISTON STOPPER BOLT

Using a screwdriver, push the pistons in all the way and remove the piston stopper bolt and gasket.

HINT: Tape the screwdriver tip before use.

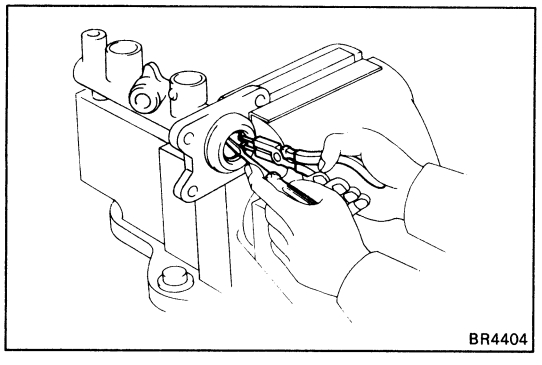
BR4404

5. REMOVE TWO PISTONS

(a) Push in the piston with a screwdriver and remove the snap ring with snap ring pliers.

(b) Remove the No. 1 piston and spring by hand, pulling straight out, not at an angle.

NOTICE: If pulled out at an angle, there is possibility that the cylinder bore could be damaged.

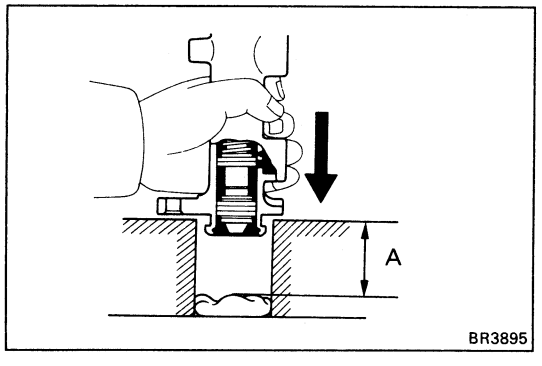

BR3895

(c) Place a rag and two wooden blocks on the work table and lightly tap the cylinder flange against the block edges until the piston drops out of the cylinder.

HINT: Make sure the distance (A) from the rag to the top of the blocks is at least 100 mm (3.94 in.).

INSPECTION OF MASTER CYLINDER COMPONENTS

HINT: Clean the disassembled parts with compressed air.

1. **INSPECT CYLINDER BORE FOR RUST OR SCORING**

2. **INSPECT CYLINDER FOR WEAR OR DAMAGE**

   If necessary, clean or replace the cylinder.

ASSEMBLY OF MASTER CYLINDER

(See page BR-10)

1. **APPLY LITHIUM SOAP BASE GLYCOL GREASE TO RUBBER PARTS INDICATED BY ARROWS**

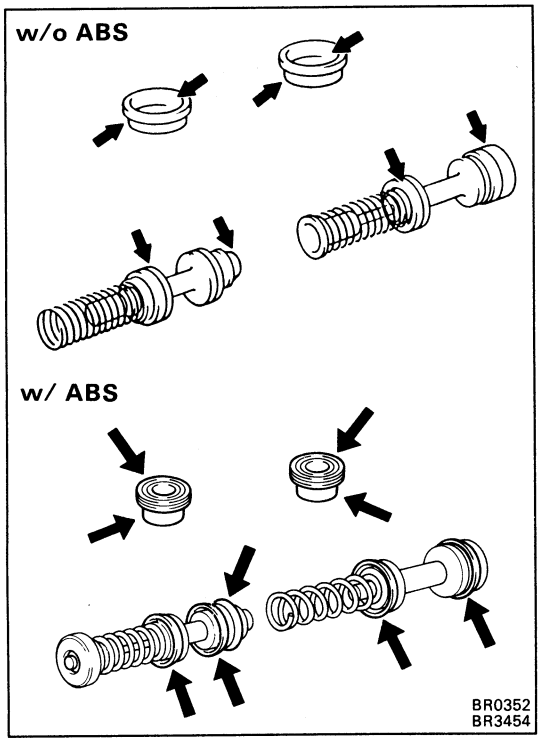

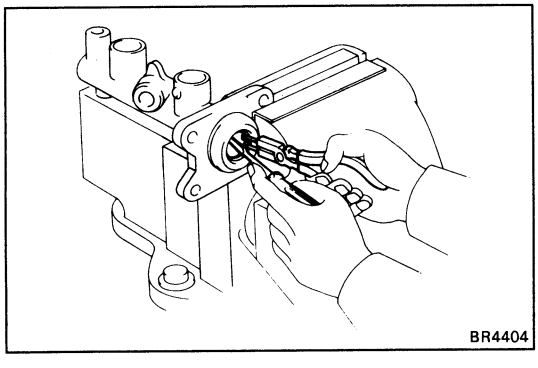

2. **INSTALL TWO SPRINGS**

   NOTICE: Be careful not to damage the rubber lips on the pistons.

   (a) Insert the two piston straight in, not at an angle.

   NOTICE: If inserted at angle, there is a possibility that the cylinder bore could be damaged.

   (b) Push in the piston with a screwdriver and install the snap ring with snap ring pliers.

   HINT: Tape the screwdriver tip before use.

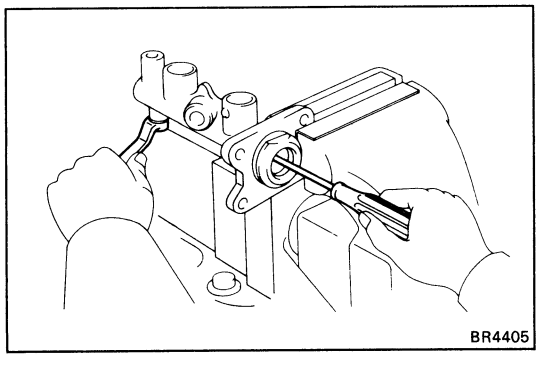

3. **INSTALL PISTON STOPPER BOLT**

   Using a screwdriver, push the piston in all the way and install the piston stopper bolt over the gasket. Torque the bolt.

   Torque: 100 kg-cm (7 ft-lb, 10 N·m)

4. **INSTALL TWO GROMMETS**

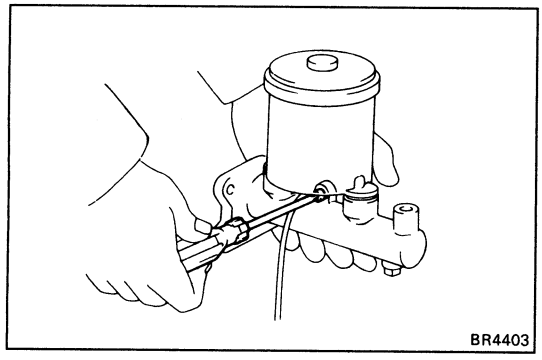

5. INSTALL RESERVOIR TANK

(a) Install the cap and strainer to the reservoir tank.

(b) Push the reservoir tank onto the cylinder.

(c) Install the set screw while pushing on the reservoir tank.

Torque: 17.5 kg-cm (15.2 in.-lb, 1.7 N·m)

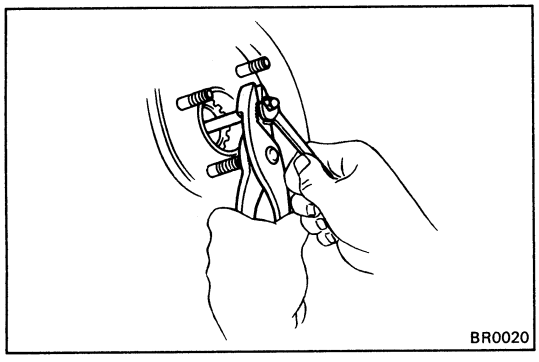

INSTALLATION OF MASTER CYLINDER

(See page BR-9)

1. **ADJUST LENGTH OF BRAKE BOOSTER PUSH ROD BEFORE INSTALLING MASTER CYLINDER**
(See page BR-16)

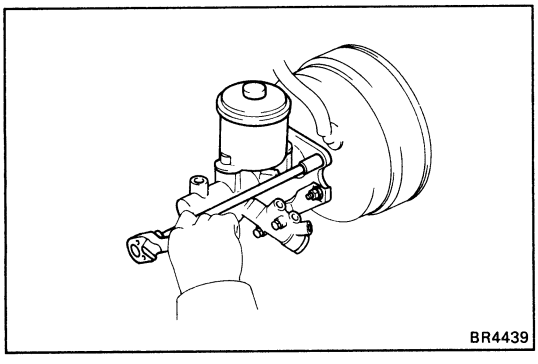

2. **INSTALL MASTER CYLINDER**
   (a) Install the master cylinder.
   (b) Install the P & BV with the P & BV bracket.
   (c) Install the four nuts and torque nuts.

   Torque: 130 kg-cm (9 ft-lb, 13 N·m)

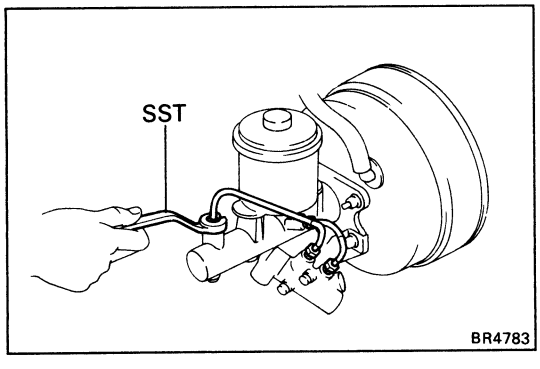

3. **CONNECT TWO BRAKE TUBES**
   Using SST, connect the brake tubes to the master cylinder. Torque the union nuts.

   SST 09751-36011

   Torque: 155 kg-cm (11 ft-lb, 15 N·m)

4. **CONNECT LEVEL WARNING SWITCH CONNECTOR**

5. **FILL BRAKE RESERVOIR WITH BRAKE FLUID AND BLEED BRAKE SYSTEM**
(See page BR-6)

6. **CHECK FOR FLUID LEAKAGE**

7. **CHECK AND ADJUST BRAKE PEDAL**
(See page BR-5)

BRAKE BOOSTER

REMOVAL OF BRAKE BOOSTER

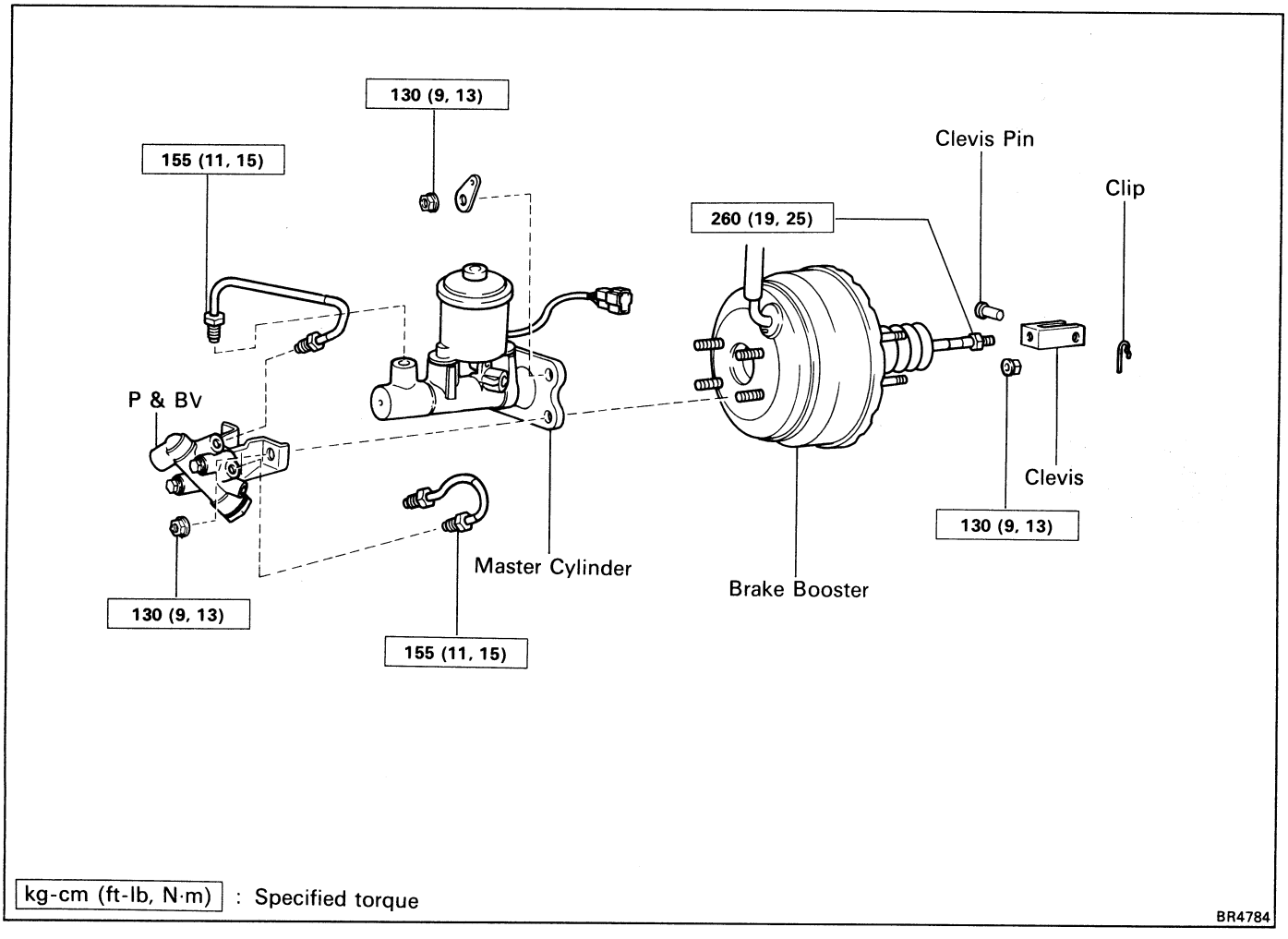

1. **REMOVE MASTER CYLINDER (See page BR-9)**
2. **DISCONNECT VACUUM HOSE FROM BRAKE BOOSTER**
3. **REMOVE PEDAL RETURN SPRING**
4. **REMOVE CLIP AND CLEVIS PIN**

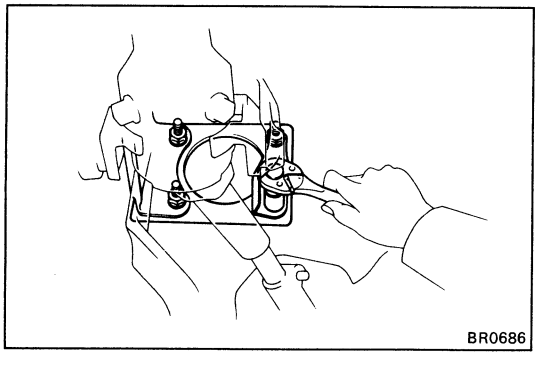

5. **REMOVE BRAKE BOOSTER**
   Remove the four nuts, and pull out the brake booster.

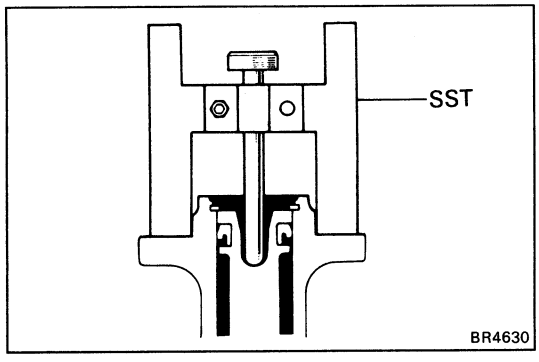

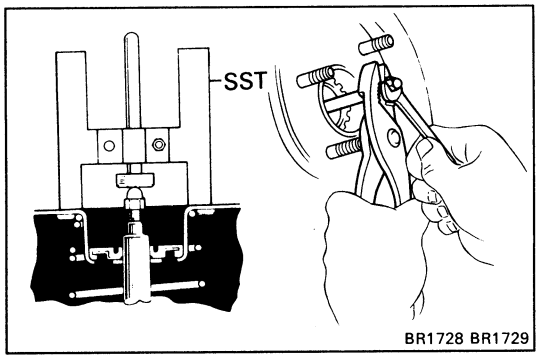

INSTALLATION OF BRAKE BOOSTER

(See page BR-15)

1. ADJUST LENGTH OF BOOSTER PUSH ROD

(a) Set the SST on the master cylinder, and lower the pin until its tip slightly touches the piston.

SST 09737-00010

(b) Turn the SST upside down, and set it on the booster.

SST 09737-00010

(c) Measure the clearance between the booster push rod and pin head (SST).

Clearance: 0 mm (0 in.)

(d) Adjust the booster push rod length until the push rod lightly touches the pin head.

2. INSTALL VACUUM HOSE

3. INSTALL MASTER CYLINDER
(See page BR-9)

4. FILL BRAKE RESERVOIR WITH BRAKE FLUID AND BLEED BRAKE SYSTEM
(See page BR-6)

5. CHECK FOR FLUID LEAKAGE

6. CHECK AND ADJUST BRAKE PEDAL
(See page BR-5)

Check and adjust the brake pedal, then tighten the clevis lock nut.

Torque: 260 kg-cm (19 ft-lb, 25 N·m)

7. PERFORM OPERATIONAL CHECK
(See page BR-6)

FRONT BRAKE

PE36T DISC (For 3S-GTE)

COMPONENTS

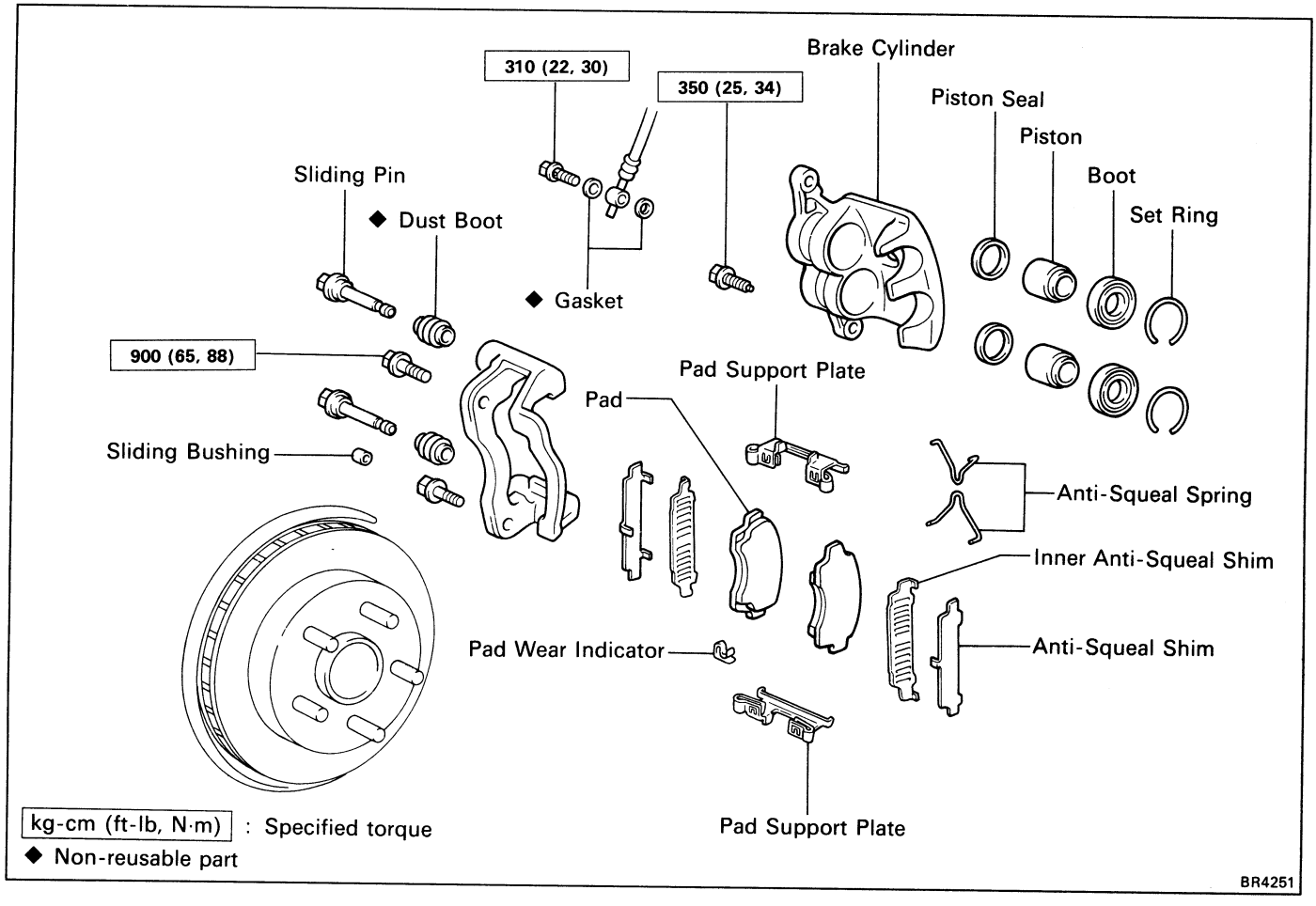

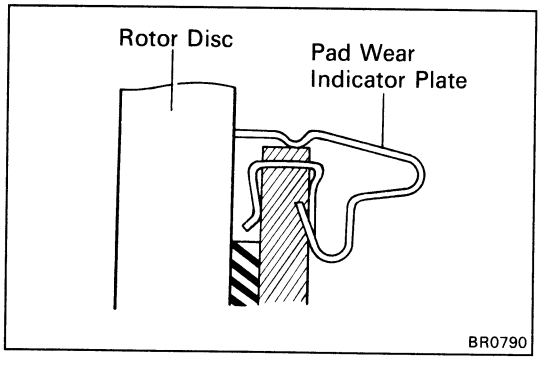

REPLACEMENT OF BRAKE PADS

HINT: If a squealing noise is made by the front brakes while driving, check the pad wear indicator. If there is evidence of the indicator contacting the rotor disc, the brake pad should be replaced.

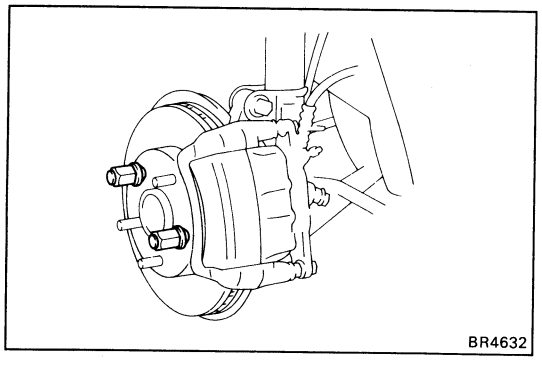

1. **REMOVE FRONT WHEEL**

Remove the wheel and temporarily fasten the rotor disc with the hub nuts.

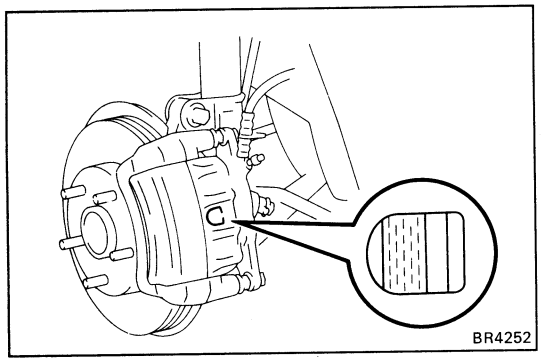

2. INSPECT PAD LINING THICKNESS

Check the pad thickness through the cylinder inspection hole and replace the pads if it is not within specification.

Minimum thickness: 1.0 mm (0.039 in.)

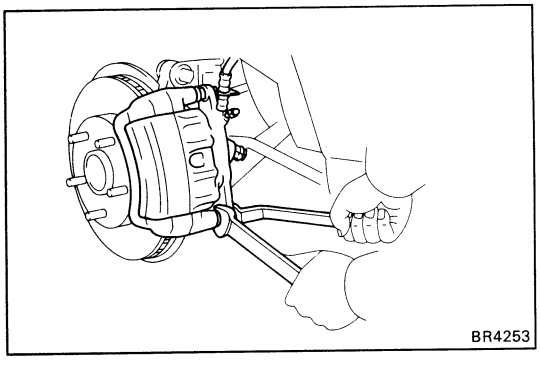

3. REMOVE CYLINDER FROM TORQUE PLATE

(a) Hold the sliding pin and loosen the two installation bolts.

(b) Remove the installation bolts.

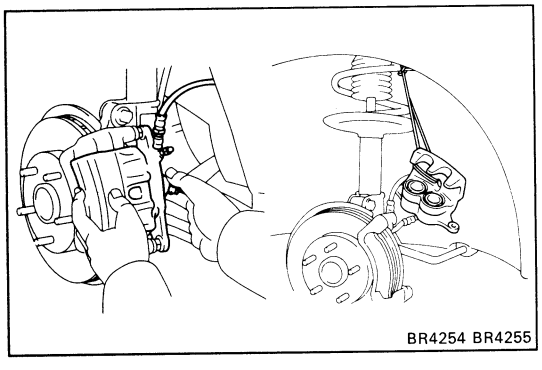

(c) Remove the brake cylinder and suspend it so the hose is not stretched.

HINT: Do not disconnect the brake hose.

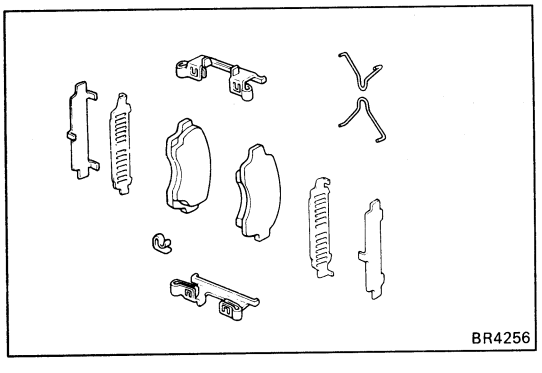

4. REMOVE FOLLOWING PARTS:

(a) Two anti-squeal springs

(b) Two brake pads

(c) Four anti-squeal shims

(d) Pad wear indicator plate

(e) Two pad support plates

5. CHECK ROTOR DISC THICKNESS
(See step 2 on page BR-22)

6. CHECK ROTOR DISC RUNOUT
(See step 3 on page BR-22)

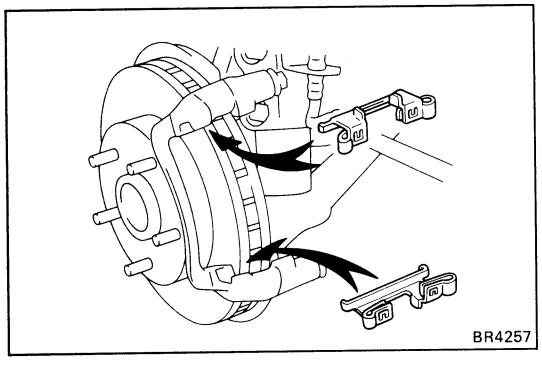

7. INSTALL PAD SUPPORT PLATES

Install the two pad support plates.

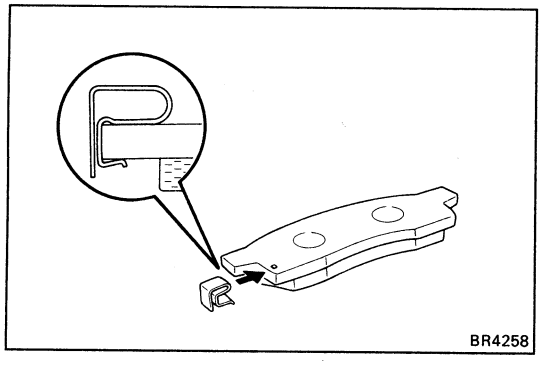
BR4258

8. INSTALL NEW PADS

(a) Install a pad wear indicator plate on the inside pad.

(b) Apply disc brake grease to both sides of the two inner anti-squeal shims.

(c) Install the two anti-squeal shims to the each pad.

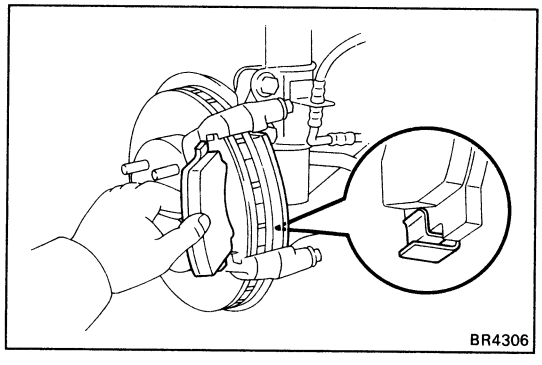
BR4306

(d) Install inside pad with the pad wear indicator plate facing downward.

(e) Install outside pad.

NOTICE: There should be no oil grease adhering to the friction surfaces of the pads or the rotor disc.

(f) Install the two anti-squeal springs.

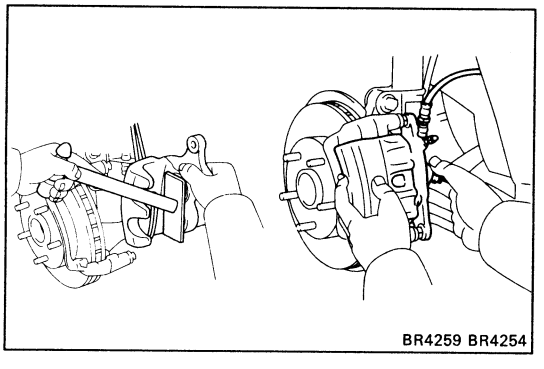
BR4259 BR4254

9. INSTALL CYLINDER

(a) Draw out a small amount of brake fluid from the reservoir tank.

(b) Place a wooden plate on the piston, and press in the piston with a hammer handle or similar implement.

HINT: If the piston is difficult to puch in, loosen the bleeder plug and push in the piston while letting some brake fluid escape.

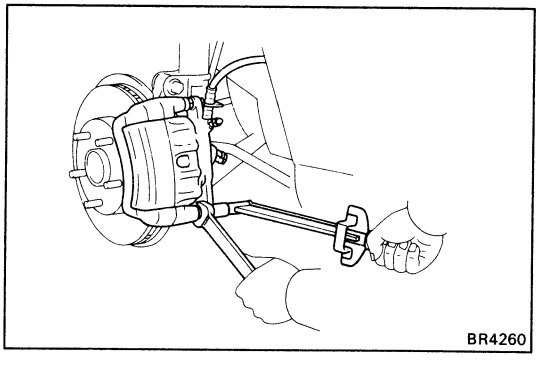
BR4260

(c) Temporarily install the cylinder on the torque plate with two installation bolts.

(d) Hold the sliding pin and torque the installation bolts.

Torque: 350 kg-cm (25 ft-lb, 34 N·m)

10. INSTALL FRONT WHEEL

11. CHECK THAT FLUID LEVEL IS MAX LINE

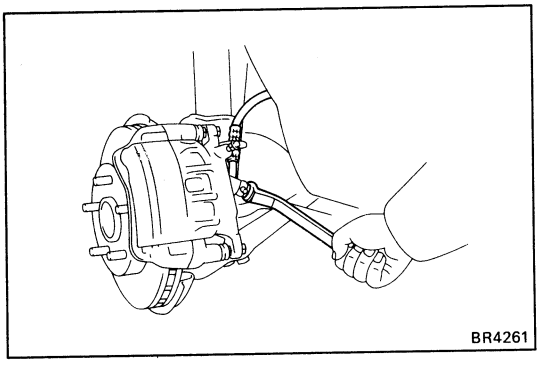

REMOVAL OF CYLINDER

(See page BR-17)

1. DISCONNECT FLEXIBLE HOSE

(a) Remove the union bolt and two gaskets from the brake cylinder, then disconnect the flexible hose from the brake cylinder.

(b) Use a container to catch the brake fluid as it drains out.

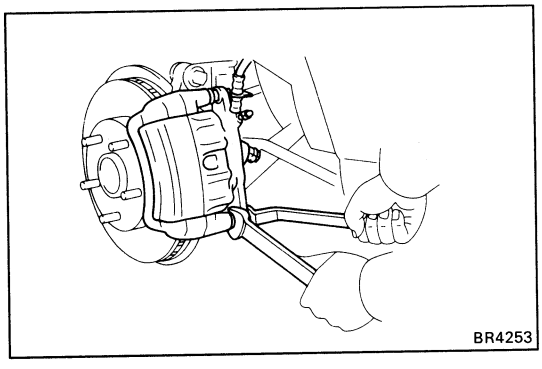

2. REMOVE CYLINDER FROM TORQUE PLATE

(a) Hold the sliding pin and loosen the two installation bolts.

(b) Remove the two installation bolts.

(c) Remove the cylinder from the torque plate.

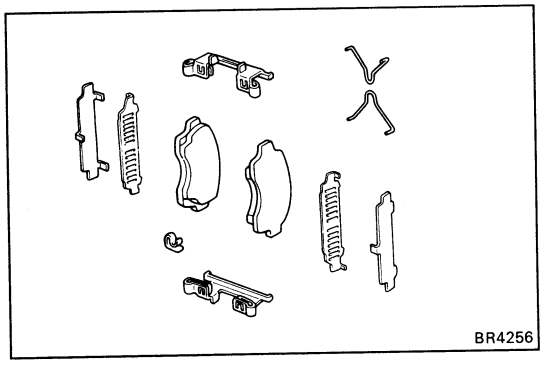

3. REMOVE FOLLOWING PARTS:

(a) Two anti-squeal springs

(b) Two brake pads

(c) Four anti-squeal shims

(d) Pad wear indicator

(e) Two pad support plates

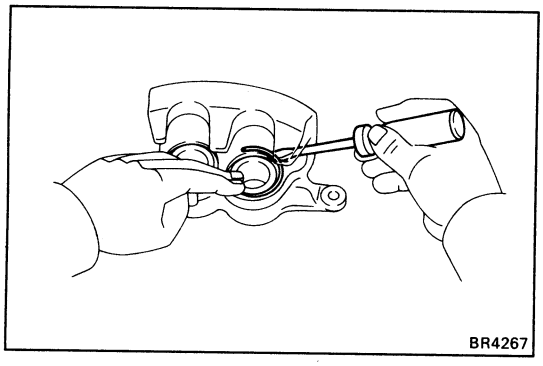

DISASSEMBLY OF CYLINDER

(See page BR-17)

1. **REMOVE CYLINDER BOOT SET RINGS AND CYLINDER BOOTS**

   Using a screwdriver, remove the cylinder boot set rings and cylinder boots from the cylinder.

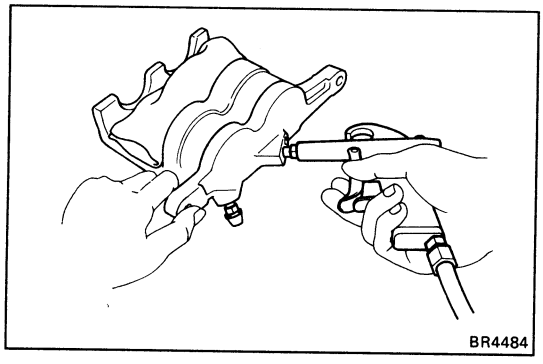

2. **REMOVE PISTONS**

   (a) Place a piece of cloth or similar article between the pistons and the cylinder.

   (b) Use compressed air to remove the pistons from the cylinder.

   CAUTION: Do not place your fingers in front of the piston when using compressed air.

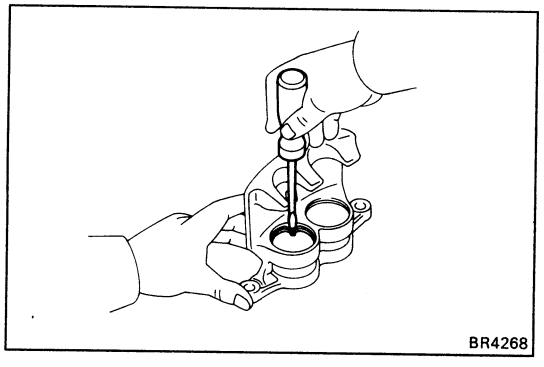

3. **REMOVE PISTON SEALS**

   Using a screwdriver, remove the piston seals from the cylinder.

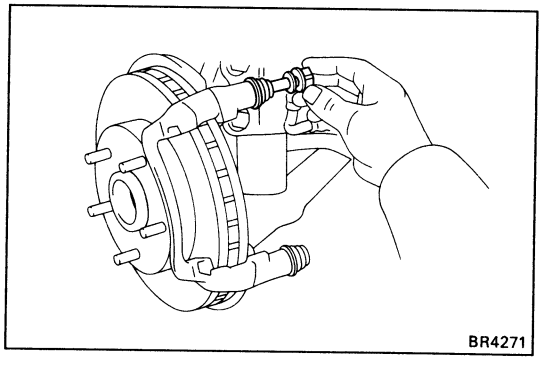

4. **REMOVE SLIDING PINS AND DUST BOOTS**

   (a) Remove the two sliding pins from the torque plate.

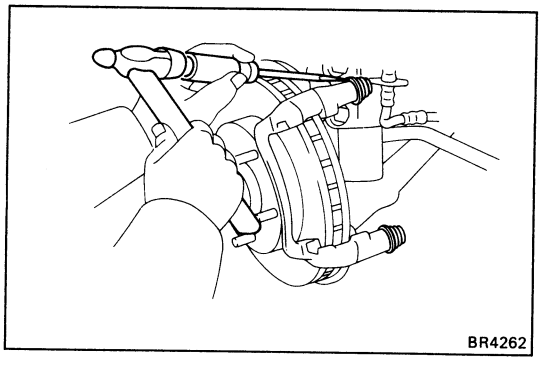

   (b) Using a chisel and hammer, tap out the two dust boots.

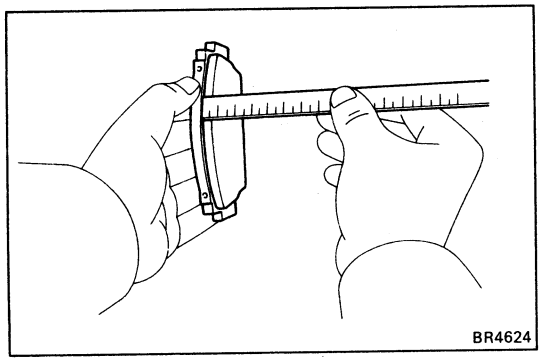
BR4624

INSPECTION OF FRONT BRAKE COMPONENTS

1. MEASURE PAD LINING THICKNESS

Standard thickness: 10.0 mm (0.39 in.)

Minimum thickness: 1.0 mm (0.039 in.)

Replace the pad if the thickness is less than the minimum of if it shows sign of uneven wear.

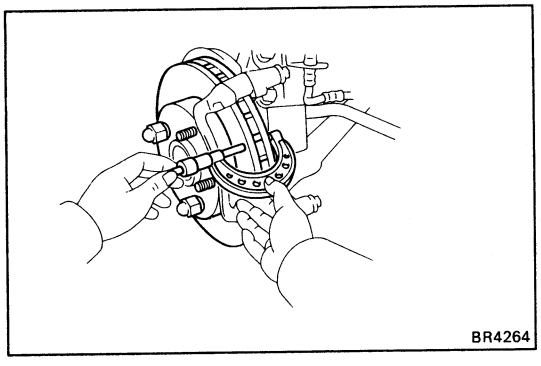
BR4264

2. MEASURE ROTOR DISC THICKNESS

Standard thickness: 25.0 mm (0.984 in.)

Minimum thickness: 24.0 mm (0.945 in.)

If the disc is scored or worn, of if thickness is less than minimum, repair or replace the disc

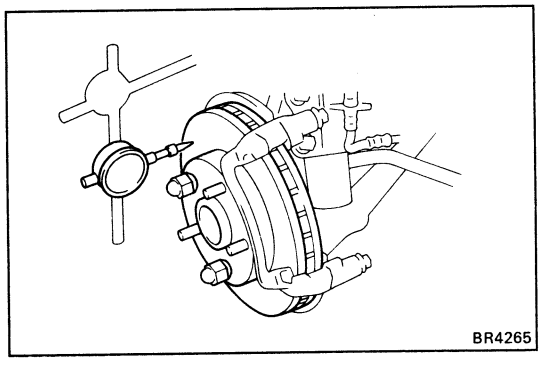
BR4265

3. MEASURE ROTOR DISC RUNOUT

HINT: Before measuring the runout, confirm that the front hub bearing play is within specification.

Measure the rotor disc runout at 10 mm (0.39 in.) from the outer edge of the disc.

Maximum disc runout: 0.07 mm (0.0028 in.)

If the runout is greater than the maximum, inspect and adjust if following the procedure below.

Then replace the disc if necessary.

(a) Remove the torque plate from the knuckle.

(b) Remove the hub nuts of the temporarily installed disc and pull off the rotor disc.

(c) Check that the hub axial play is within specification, and replace the bearing if not within specification. (See page SA-10)

(d) Install the rotor disc and measure the disc runout, then shift the rotor disc one fifth of a turn or one fourth of a turn, and measure the disc runout. Similarly measure the runout at each position, and select the position where the runout is minimum.

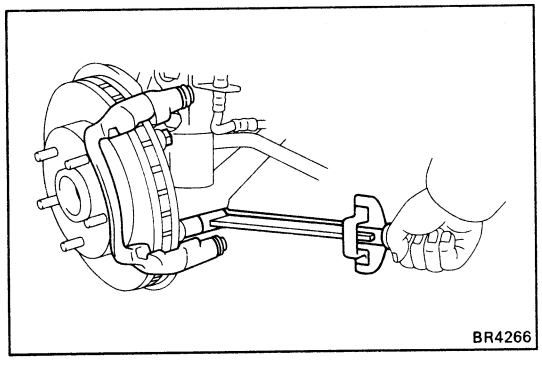
BR4266

(e) In this position, if the runout is within specification, install the torque plate and torque the mounting bolts.

Torque: 900 kg-cm (65 ft-lb, 88 N·m)

(f) If not within specification, replace the rotor disc, and repeat (d) and (e).

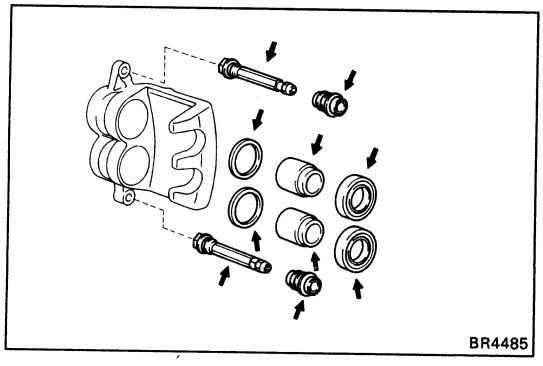

ASSEMBLY OF CYLINDER

(See page BR-17)

1. **APPLY LITHIUM SOAP BASE GLYCOL GREASE TO PARTS INDICATED WITH ARROWS**

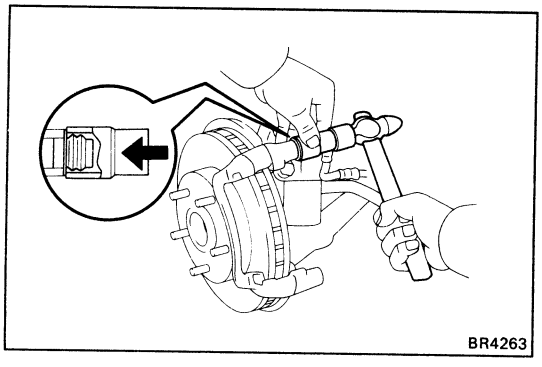

2. **INSTALL DUST BOOTS AND SLIDING PINS**
   (a) Using a 19 mm socket wrench and hammer, tap in two new dust boots into the torque plate.
   (b) Confirm that the metal plate portion of the dust boot fits snugly in the torque plate.

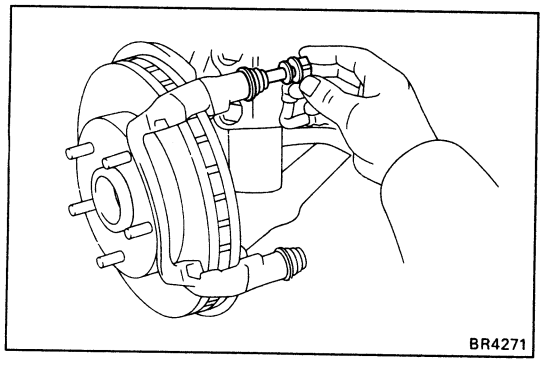

   (c) Insert two sliding pins into the torque plate.

   NOTICE: Insert the sliding pin with sliding bushing into the bottom side.

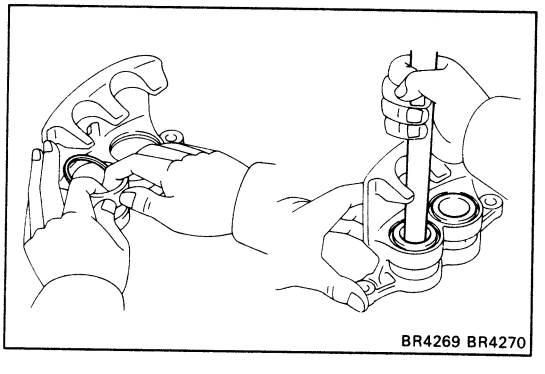

3. **INSTALL PISTON SEALS AND PISTONS IN CYLINDER**

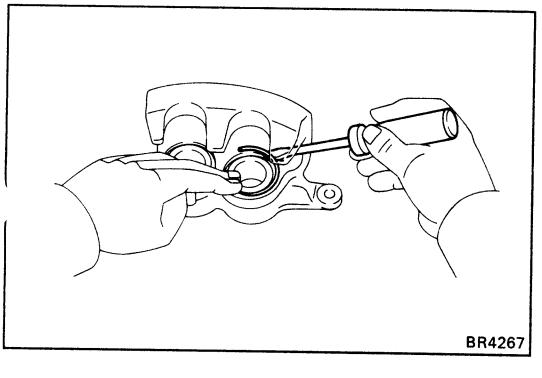

4. **INSTALL CYLINDER BOOTS AND CYLINDER BOOT SET RINGS**

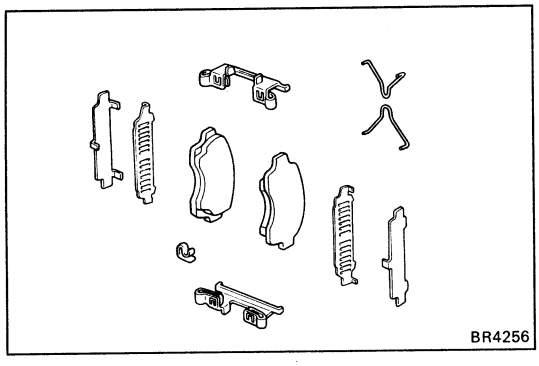
BR4256

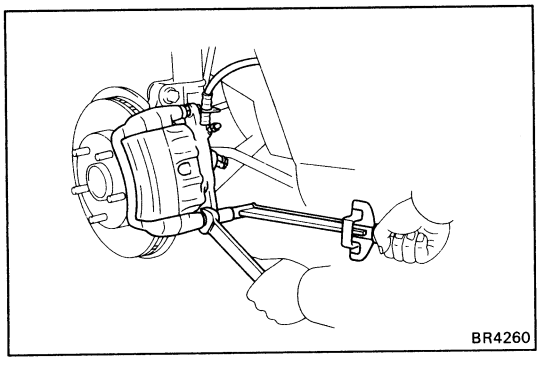
BR4260

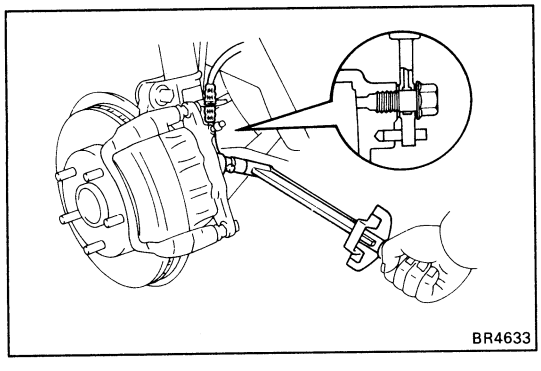
BR4633

INSTALLATION OF CYLINDER

(See page BR-17)

1. **INSTALL FOLLOWING PARTS:**
   (a) Two pad support plates
   (b) Pad wear indicator
   (c) Four anti-squeal shims
   (d) Two brake pads
   (e) Two anti-squeal springs
   (See steps 7 and 8 on pages BR-18 and 19)

2. **INSTALL CYLINDER**
   (a) Temporarily install the cylinder on the torque plate with two installation bolts.
   (b) Hold the sliding pin and torque the installation bolts.
   Torque: 350 kg-cm (25 ft-lb, 34 N·m)

3. **CONNECT FLEXIBLE HOSE**
   Install the flexible hose on the brake cylinder with two new gaskets.
   Torque: 310 kg-cm (22 ft-lb, 30 N·m)
   HINT: Insert the flexible hose lock securely in the lock hole in the brake cylinder.

4. **FILL BRAKE RESERVOIR WITH BRAKE FLUID AND BLEED BRAKE SYSTEM**
   (See page BR-6)

5. **CHECK FOR LEAKS**

PD51 DISC (For 5S-FE)

COMPONENTS

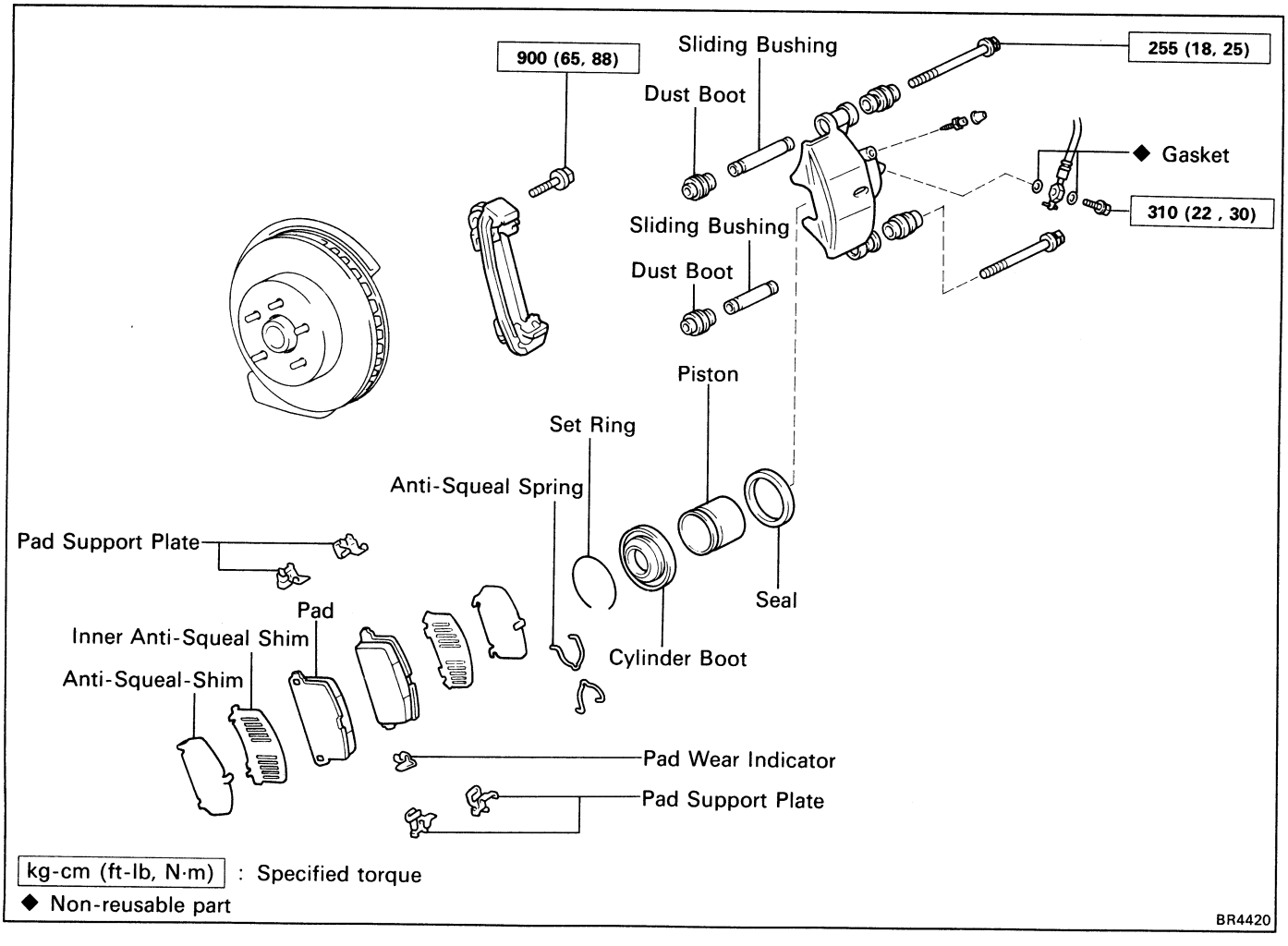

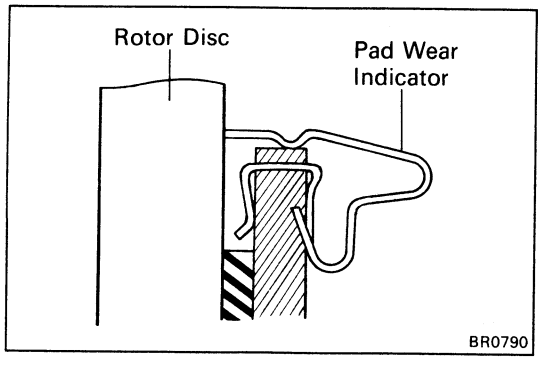

REPLACEMENT OF BRAKE PADS

HINT: If a squealing noise is made by the front brakes while driving, check the pad wear indicator. If there is evidence of the indicator contacting the rotor disc, the brake pad should be replaced.

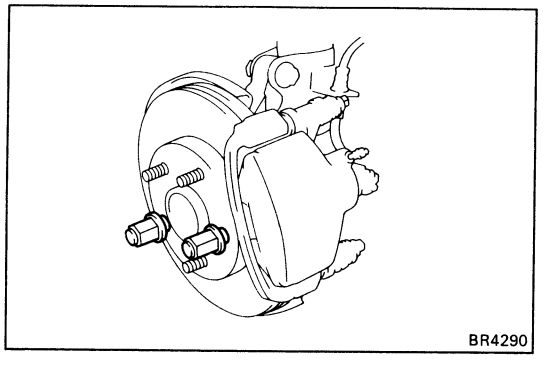

1. REMOVE FRONT WHEEL

Remove the wheel and temporarily fasten the rotor disc with the hub nuts.

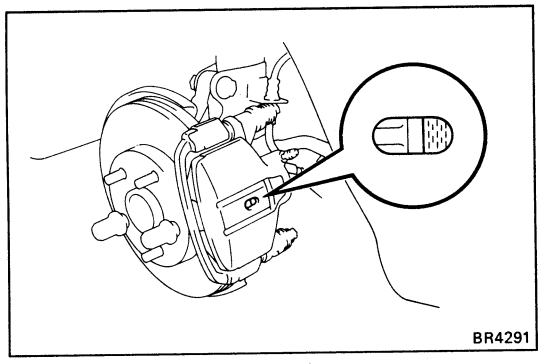
BR4291

2. INSPECT PAD LINING THICKNESS

Check the pad thickness through the cylinder inspection hole and replace the pads if it is not within specification.

Minimum thickness: 1.0 mm (0.039 in.)

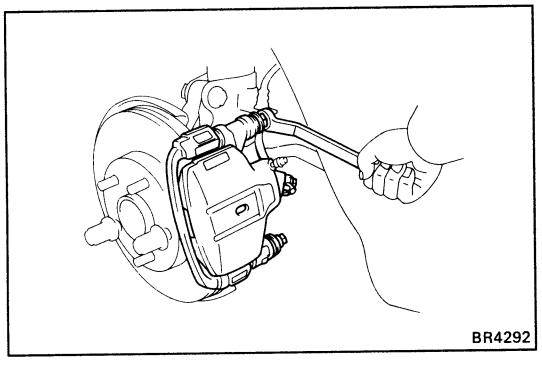
BR4292

3. REMOVE CYLINDER FROM TORQUE PLATE

(a) Remove two installation bolts from the torque plate.

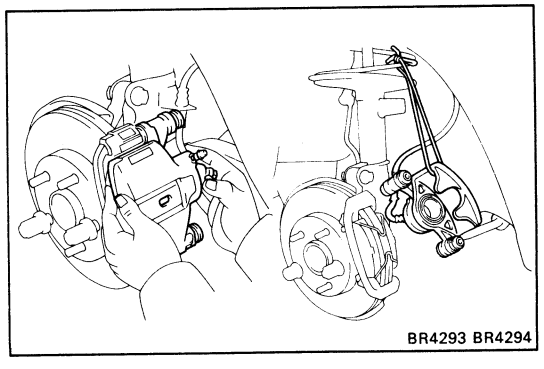
BR4293 BR4294

(b) Remove the brake cylinder and suspend it so the hose is not stretched.

HINT: Do not disconnect the brake hose.

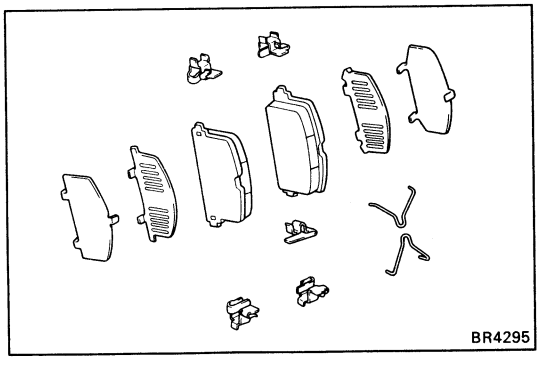
BR4295

4. REMOVE FOLLOWING PARTS:

(a) Two anti-squeal springs
(b) Two brake pads
(c) Four anti-squeal shims
(d) Pad wear indicator plate
(e) Four pad support plates

5. CHECK ROTOR DISC THICKNESS
(See step 2 on page BR-30)

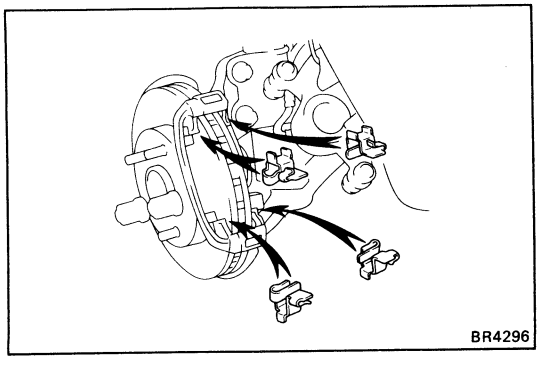
BR4296

6. CHECK ROTOR DISC RUNOUT
(See step 3 on page BR-30)

7. INSTALL PAD SUPPORT PLATES

Install the pad support plates.

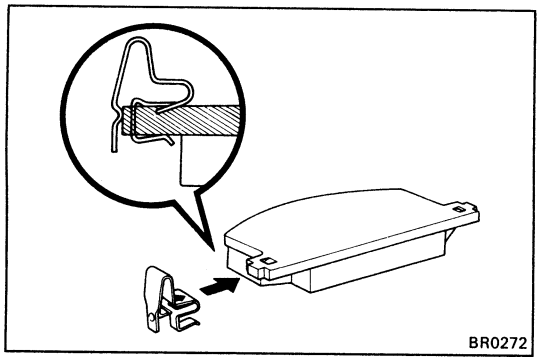

8. INSTALL NEW PADS

(a) Install a pad wear indicator plate on the inside pad.

(b) Apply disc brake grease to both sides of the two inner anti-squeal shims.

(c) Install the two anti-squeal shims to the each pad.

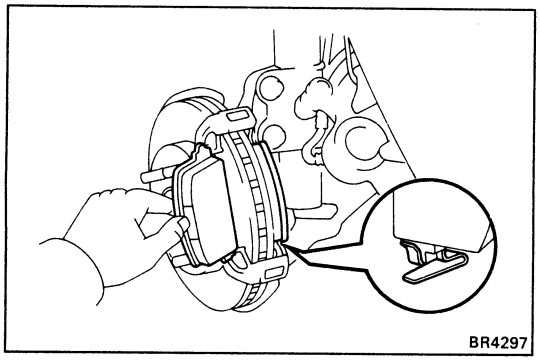

(d) Install inside pad with the pad wear indicator plate facing downward.

(e) Install outside pad.

NOTICE: There should be no oil or grease adhering to the friction surfaces of the pads or the rotor disc.

(f) Install the two anti-squeal springs.

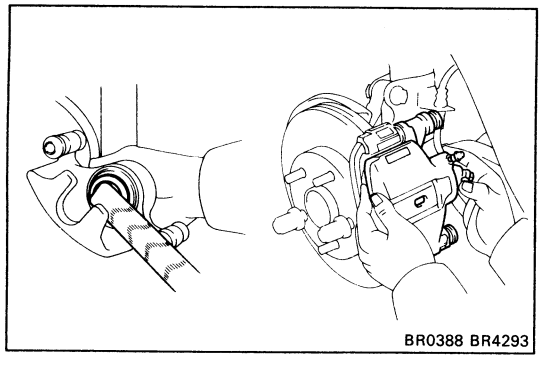

9. INSTALL CYLINDER

(a) Draw out a small amount of brake fluid from the reservoir tank.

(b) Press in the piston with a hammer handle or an equivalent.

HINT: If the piston is difficult to push in, loosen the bleeder plug and push in the piston while letting some brake fluid escape.

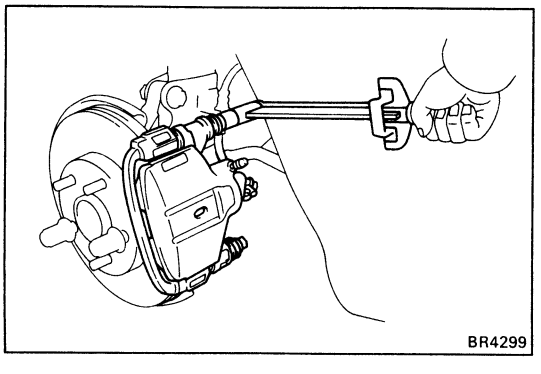

(c) Install the brake cylinder.

(d) Install and torque the two installation bolts.

Torque: 255 kg-cm (18 ft-lb, 25 N·m)

10. INSTALL FRONT WHEEL

11. CHECK THAT FLUID LEVEL IS MAX LINE

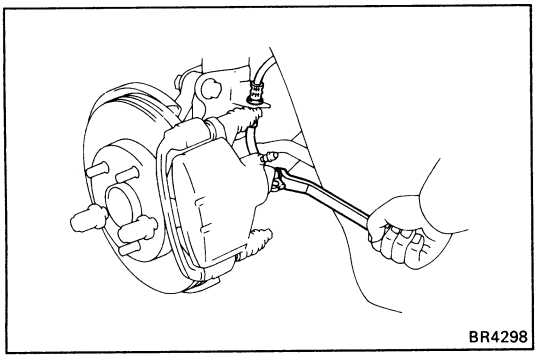
BR4298

REMOVAL OF CYLINDER

(See page BR-25)

1. **DISCONNECT FLEXIBLE HOSE**
   (a) Remove the union bolt and two gaskets from the brake cylinder, then disconnect the flexible hose from the brake cylinder.
   (b) Use a container to catch the brake fluid as it drains out.

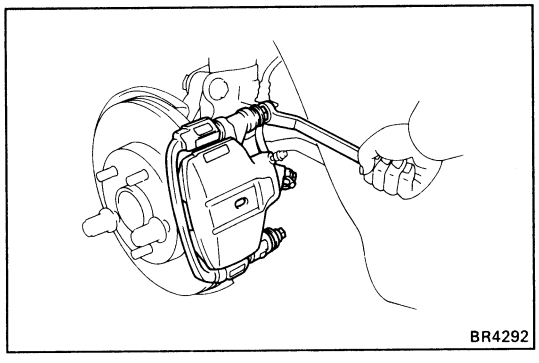
BR4292

2. **REMOVE CYLINDER FROM TORQUE PLATE**
   Remove the two installation bolts and cylinder.

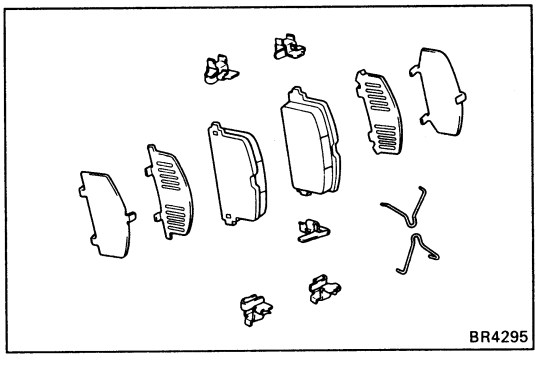
BR4295

3. **REMOVE FOLLOWING PARTS:**
   (a) Two anti-squeal springs
   (b) Two brake pads
   (c) Four anti-squeal shims
   (d) Pad wear indicator
   (e) Four pad support plates

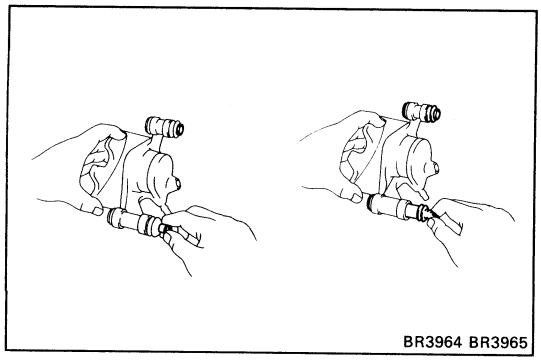
BR3964 BR3965

DISASSEMBLY OF CYLINDER

(See page BR-25)

1. REMOVE FOLLOWING PARTS:

(a) Two sliding bushings

(b) Four dust boots

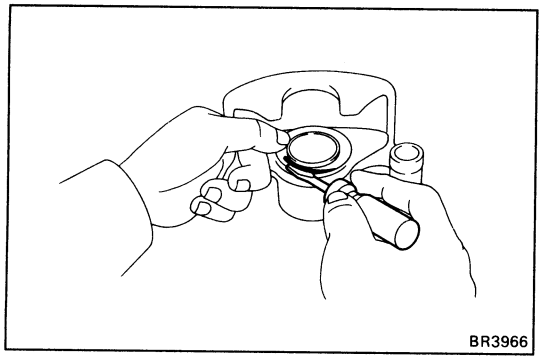
BR3966

2. REMOVE CYLINDER BOOT SET RING AND CYLINDER BOOT

Using a screwdriver, remove the cylinder boot set ring and cylinder boot.

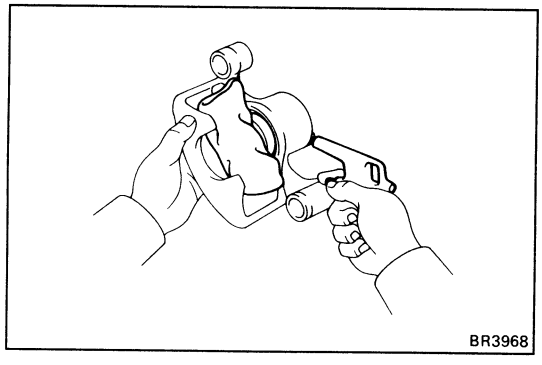
BR3968

3. REMOVE PISTON FROM CYLINDER

(a) Put a piece of cloth or an equivalent between the piston and the cylinder.

(b) Use compressed air to remove the piston from the cylinder.

CAUTION: Do not place your fingers in front of the piston when using compressed air.

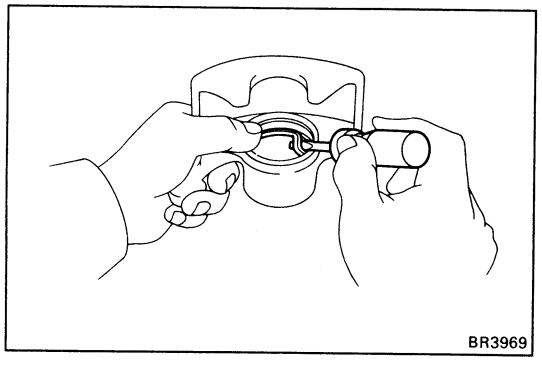
BR3969

4. REMOVE PISTON SEAL FROM BRAKE CYLINDER

Using a screwdriver, remove the piston seal.

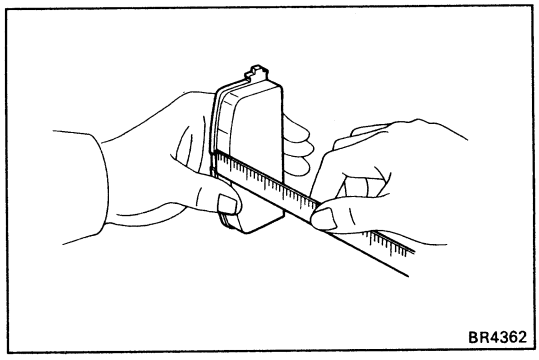
BR4362

INSPECTION OF FRONT BRAKE COMPONENTS

1. MEASURE PAD LINING THICKNESS

Standard thickness: 10.0 mm (0.39 in.)

Minimum thickness: 1.0 mm (0.039 in.)

Replace the pad if the thickness is less than the minimum of if it shows sign of uneven wear.

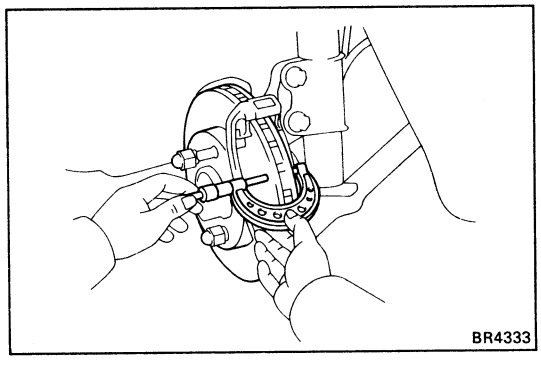
BR4333

2. MEASURE ROTOR DISC THICKNESS

Standard thickness: 25.0 mm (0.984 in.)

Minimum thickness: 24.0 mm (0.945 in.)

If the disc is scored or worn, of if thickness is less than minimum, repair or replace the disc.

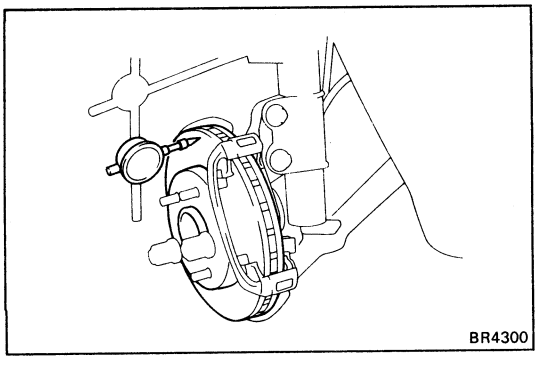
BR4300

3. MEASURE ROTOR DISC RUNOUT

HINT: Before measuring the runout, confirm that the front hub bearing play is within specification.

Measure the rotor disc runout at 10 mm (0.39 in.) from the outer edge of the rotor disc.

Maximum disc runout: 0.07 mm (0.0028 in.)

If the runout is greater than the maximum, inspect and adjust if following the procedure below.

Then replace the disc if necessary.

(a) Remove the torque plate from the knuckle.

(b) Remove the hub nuts of the temporarily installed disc and pull off the rotor disc.

(c) Check that the hub axial play is within specification, and replace the bearing if not within specification. (See page SA-10)

(d) Install the rotor disc and measure the disc runout, then shift the rotor disc one fifth of a turn or one fourth of a turn, and measure the disc runout. Similarly measure the runout at each position, and select the position where the runout is minimum.

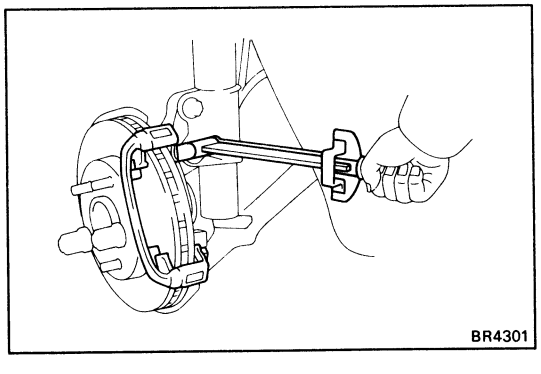
BR4301

(e) In this position, if the runout is within specification, install the torque plate and torque the mounting bolts.

Torque: 900 kg-cm (65 ft-lb, 88 N·m)

(f) If not within specification, replace the rotor disc, and repeat (d) and (e).

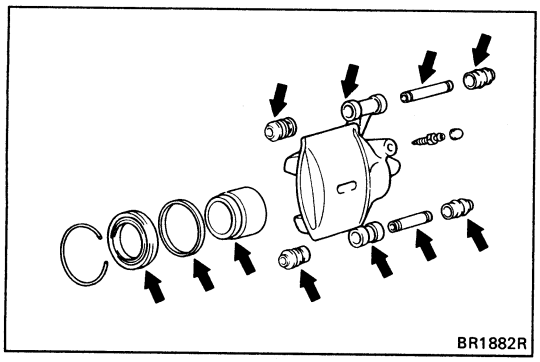

ASSEMBLY OF CYLINDER

(See page BR-25)

1. **APPLY LITHIUM SOAP BASE GLYCOL GREASE TO PARTS INDICATED WITH ARROWS**

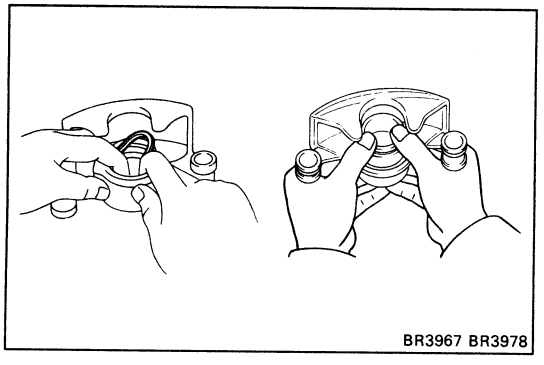

2. **INSTALL PISTON SEAL AND PISTON IN CYLINDER**

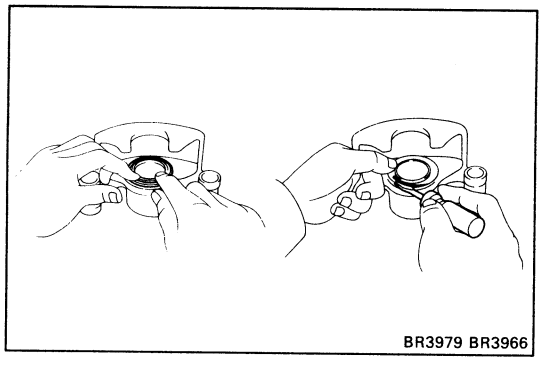

3. **INSTALL CYLINDER BOOT AND RING IN CYLINDER**

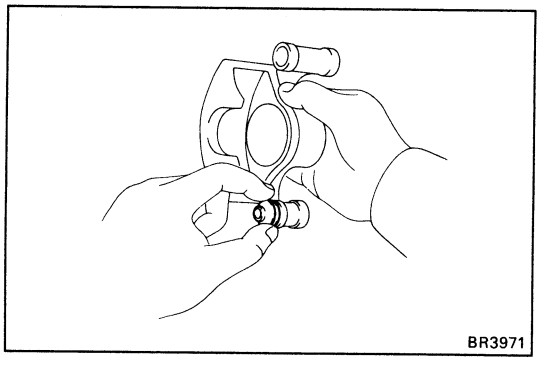

4. **INSTALL DUST BOOTS AND CYLINDER SLIDING BUSHINGS**
   (a) Install the dust boots into the brake cylinder.
   (b) Insure that the boots is secured firmly to the brake cylinder grooves.

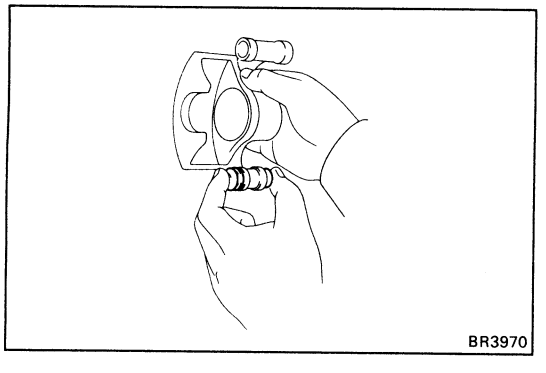

   (c) Install the bushing into the boots.
   (d) Insure that the boots is secured firmly to the bushing grooves.

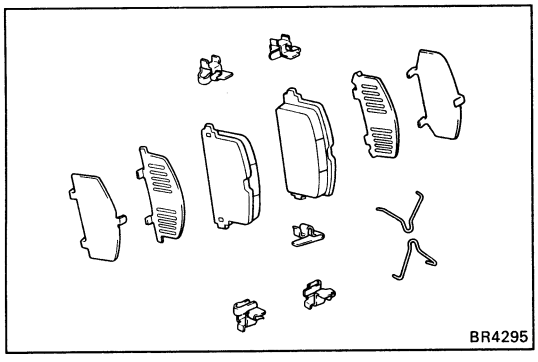
BR4295

INSTALLATION OF CYLINDER

(See page BR-25)

1. **INSTALL FOLLOWING PARTS:**
   (a) Four pad support plates
   (b) Pad wear indicator
   (c) Four anti-squeal shims
   (d) Two brake pads
   (e) Two anti-squeal springs
   (See steps 7 and 8 on pages BR-26 and 27)

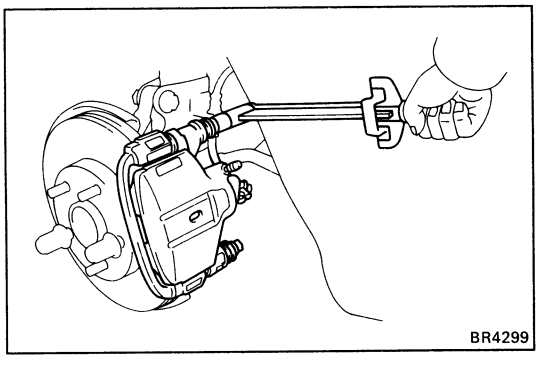
BR4299

2. **INSTALL CYLINDER**
   (a) Install the brake cylinder.
   (b) Install and torque the two installation bolts.
   Torque: 255 kg-cm (18 ft-lb, 25 N·m)

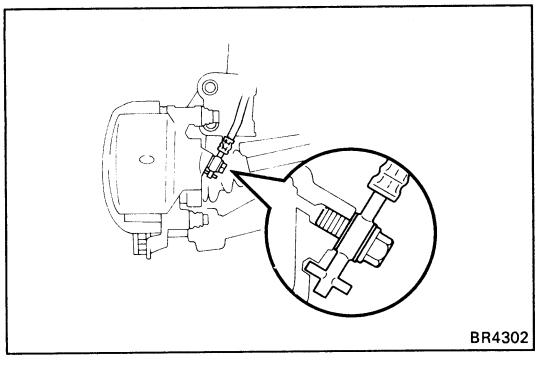
BR4302

3. **INSTALL FLEXIBLE HOSE**
   Install the flexible hose on the brake cylinder with two new gaskets.
   Torque: 310 kg-cm (22 ft-lb, 30 N·m)
   HINT: Insert the flexible hose lock securely in the lock hole in brake cylinder.

4. **FILL BRAKE RESERVOIR WIHT BRAKE FLUID AND BLEED BRAKE SYSTEM**
   (See page BR-6)

5. **CHECK FOR LEAKS**

REAR BRAKE

COMPONNENTS

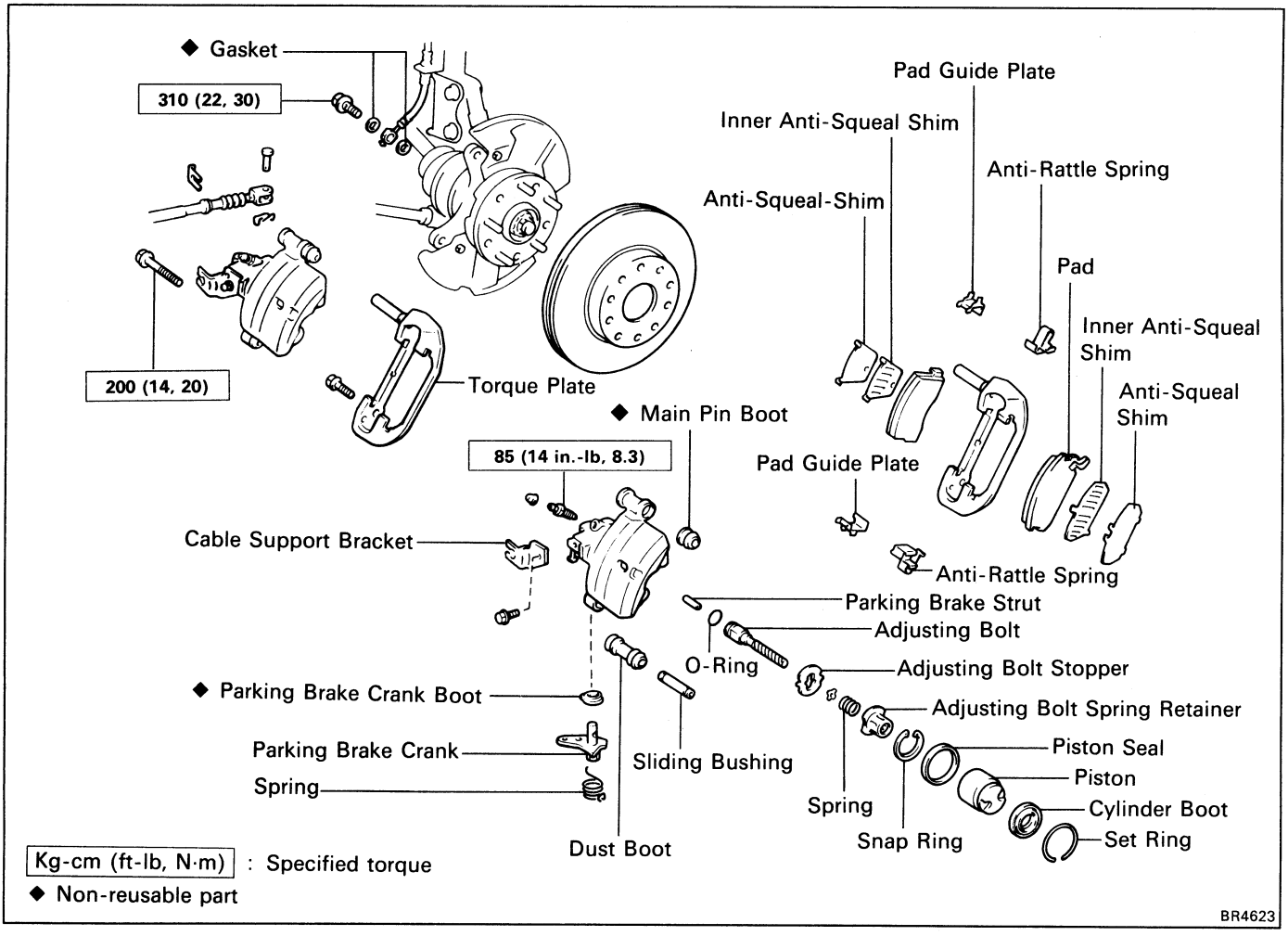

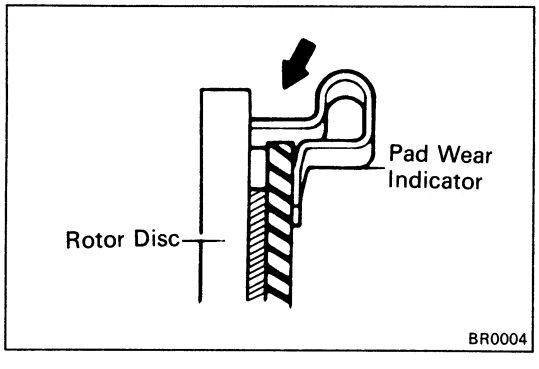

REPLACEMENT OF BRAKE PADS

HINT: If a squealing noise is made by the front brakes while driving, check the pad wear indicator. If there is evidence of the indicator contacting the rotor disc, the brake pad should be replaced.

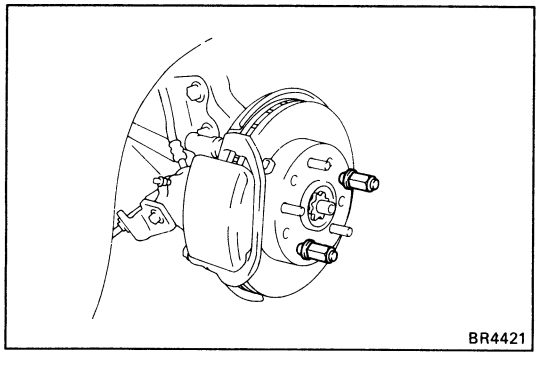

1. REMOVE FRONT WHEEL

Remove the wheel and temporarily fasten the rotor disc with the hub nuts.

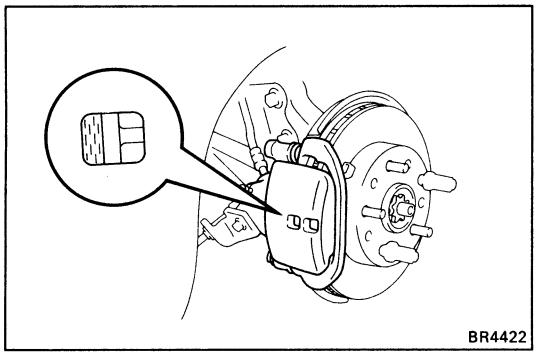
BR4422

2. INSPECT PAD LINING THICKNESS

Check the pad thickness through the cylinder inspection hole and replace the pads if it is not within specification.

Minimum thickness: 1.0 mm (0.039 in.)

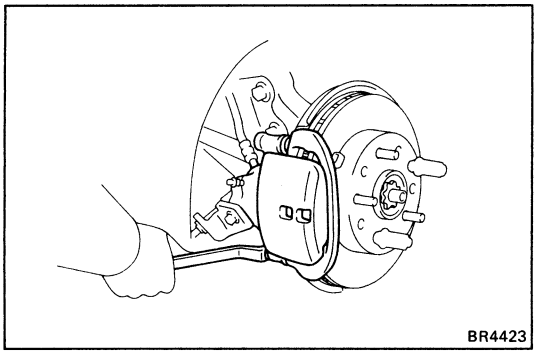
BR4423

3. LIFT UP CYLINDER

(a) Remove the installation bolt from the torque plate.

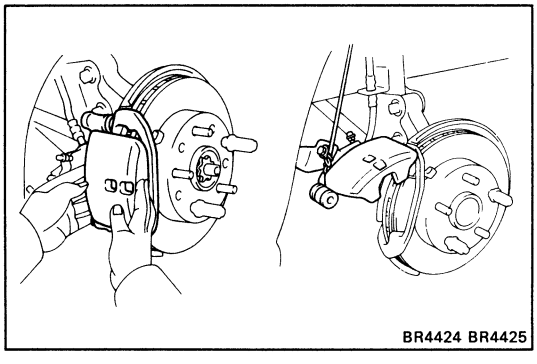
BR4424 BR4425

(b) Lift up the brake cylinder and suspend the cylinder with string.

HINT: Do not disconnect the flexible hose from the brake cylinder.

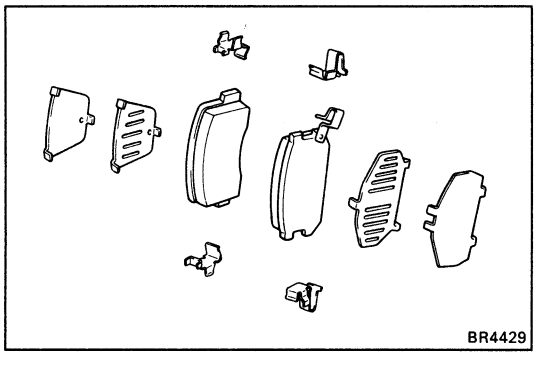
BR4429

4. REMOVE FOLLOWING PARTS:

(a) Two brake pads
(b) Four anti-squeal shims
(c) Two anti-rattle springs
(d) Two pad guide plats

5. CHECK ROTOR DISC THICKNESS

(See step 2 on page BR-40)

6. CHECK ROTOR DISC RUNOUT

(See step 3 on page BR-40)

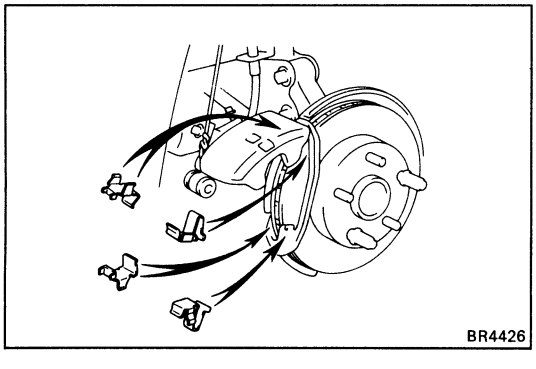
BR4426

7. INSTALL ANTI-RATTLE SPRINGS AND PAD GUIDE PLATES

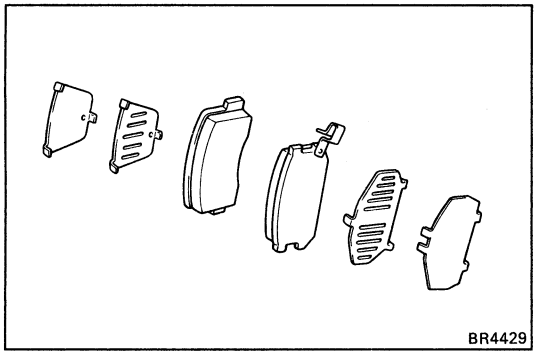
BR4429

8. INSTALL NEWPADS

(a) Apply disc brake to both sides of the two inner anti-squeal shims.

(b) Install the two anti-squeal shims to the each pad.

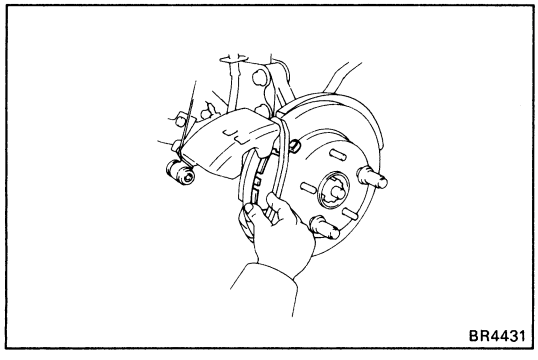
BR4431

(c) Install the two pads.

NOTICE: There should be no oil grease adhering to the friction surfaces of the pads or the rotor disc.

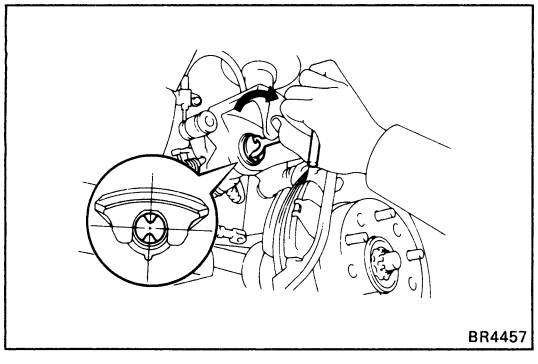
BR4457

9. INSTALL CYLINDER

(a) Uusing SST, slowly turn piston clockwise until the piston turns freely, ten alingn the cylinder protrusion and piston stopper groove.

SST 09719-14020 (09719-00020)

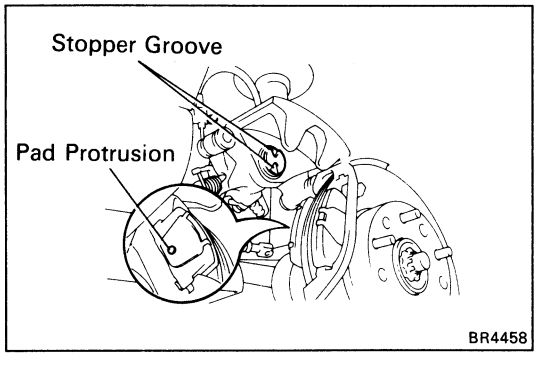

BR4458

(b) Fit the pad protrusion into the piston stopper groove and install the cylinder.

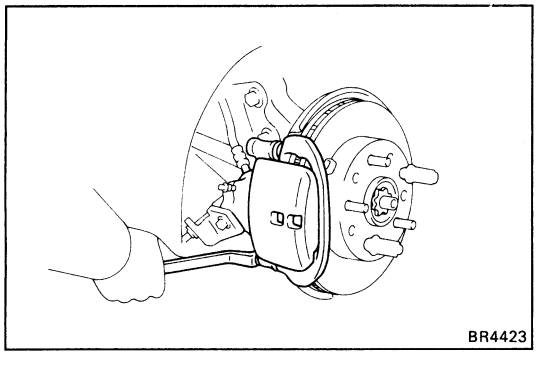
BR4423

(c) Install and torque the installation bolt.

Torque: 200 kg-cm (14 ft-lb, 20 N·m)

10. INSTALL REAR WHEEL

11. CHECK THAT FLUID LEVEL IS MAX LINE

12. ADJUST PAD CLEARANCE

Depress the brake pedal for several times.

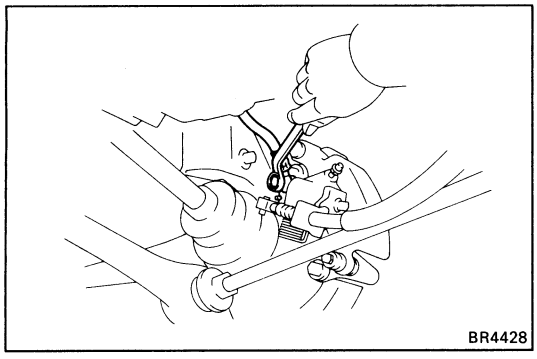
BR4428

REMOVAL OF CYLINDER

(See page BR-33)

1. DISCONNECT FLXIBLE HOSE

(a) Remove the union bolt and two gaskets, and disconnect the flexible hose.

(b) Use a container to catch the brake fluid.

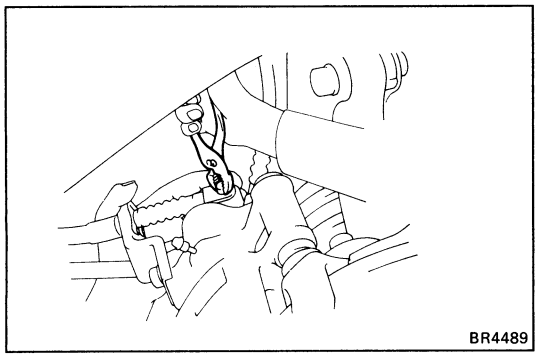
BR4489

2. DISCONNECT PARKING BRAKE CABLE

(a) Remove the pin clip.

(b) Pull out the hole pin while pushing the parking brake crank.

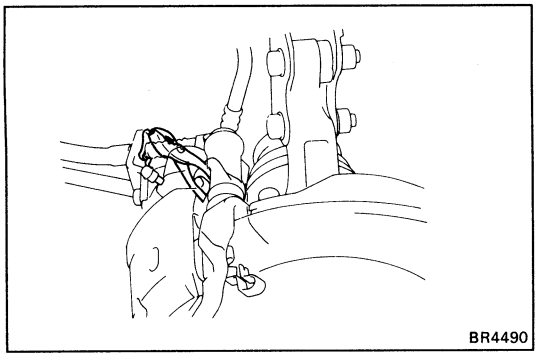
BR4490

(c) Remove the clip.

(d) Remove the parking brake cable from the cable support bracket.

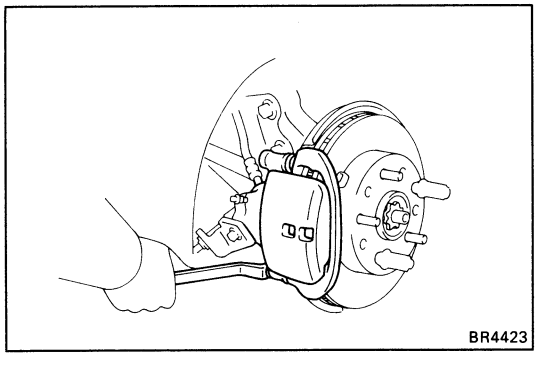
BR4423

3. REMOVE CYLINDER

Remove the installation bolt, and remove the brake cylinder.

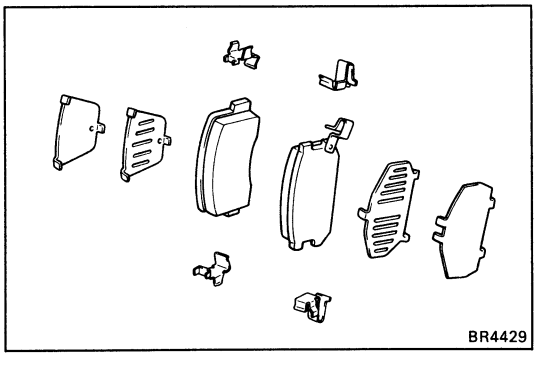
BR4429

4. REMOVE FOLLOWING PARTS:

(a) Two brake pads

(b) Four anti-squeal shims

(c) Two anti-rattle springs

(d) Two pad guide plats

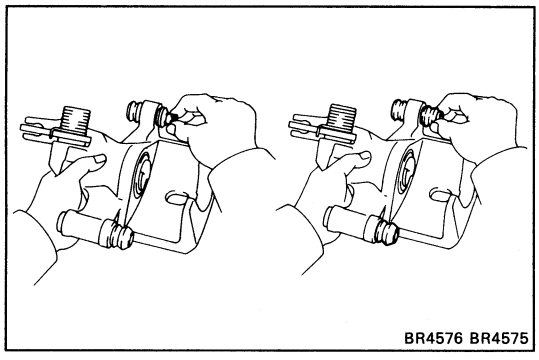
BR4576 BR4575

DISASSEMBLY OF CYLINDER

(See page BR-33)

1. **REMOVE DUST BOOT AND SLIDING BUSHING**

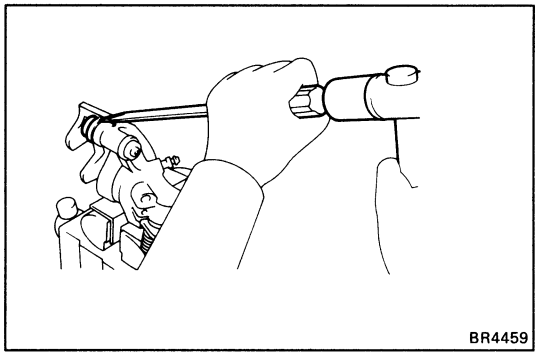
BR4459

2. **REMOVE MAIN PIN BOOT**

Using a chisel and hammer, tap out the dust boots.

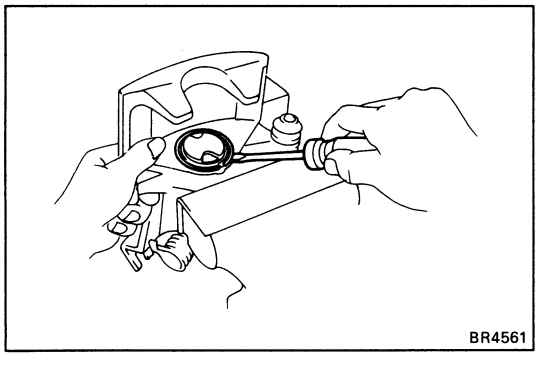
BR4561

3. **REMOVE CYLINDER BOOT SET RING AND CYLINDER BOOT**

Using a screwdriver, remove the cylinder boot set ring and cylinder boot.

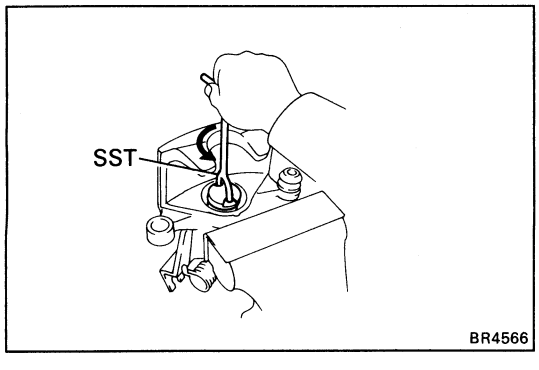

BR4566

4. **REMOVE PISTON FROM CYLINDER**

Using SST, turn the piston counterclockwise and remove it.

SST 09719-14020 (09719-00020)

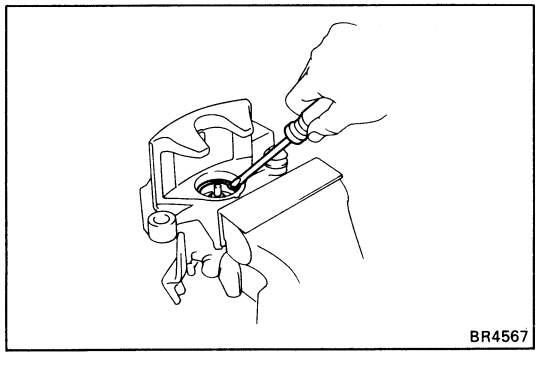
BR4567

5. **REMOVE PISTON SEAL FROM CYLINDER**

Using a screwdriver, remove the piston seal.

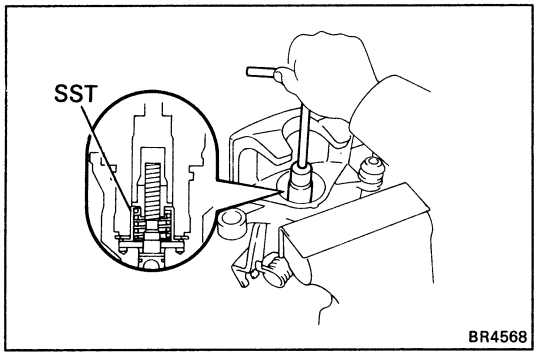

6. REMOVE ADJUSTING BOLT

(a) Set SST onto the adjusting bolt, and lightly tighten it with a 14 mm socket.

SST 09756-00010

CAUTION:

- **To insure safety, always use SST as there is a possibility of the spring flying out, causing injury or damaging to the interior surface of the cylinder.**
- **Be careful not to tighten the SST too tightly as this may damage the spring retainer.**

(b) Using snap ring pliers, remove the snap ring from the cylinder.

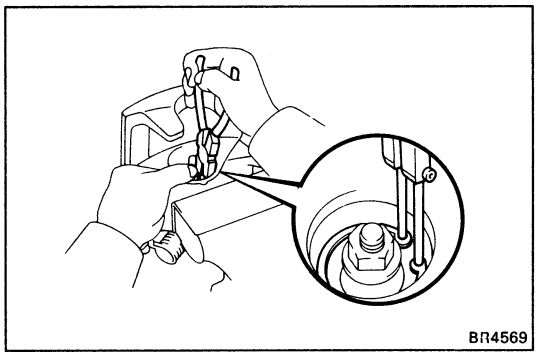

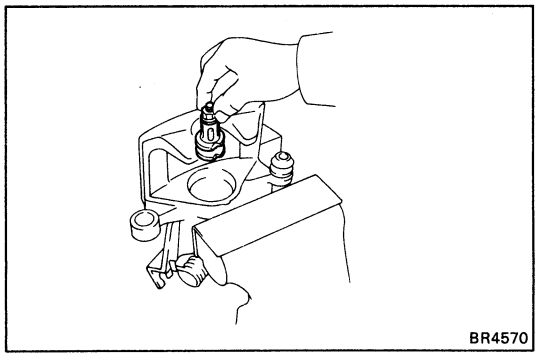

(c) Remove the parking brake strut, spring retainer, spring, spring plate and stopper together with the adjusting bolt from the cylinder.

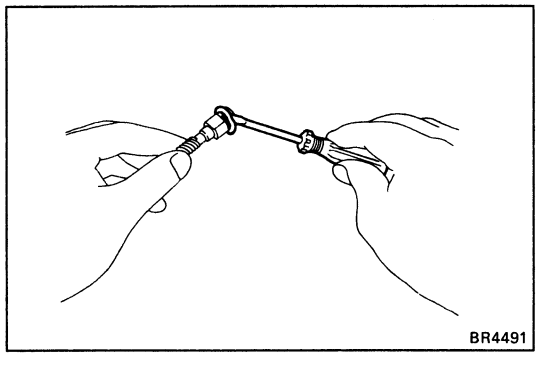

7. DISASSEMBLE ADJUSTING BOLT

(a) Remove SST.

SST 09756-00010

(b) Remove the spring retainer, spring, spring plate and stopper from the adjusting bolt.

(c) Remove the O-ring from the adjusting bolt.

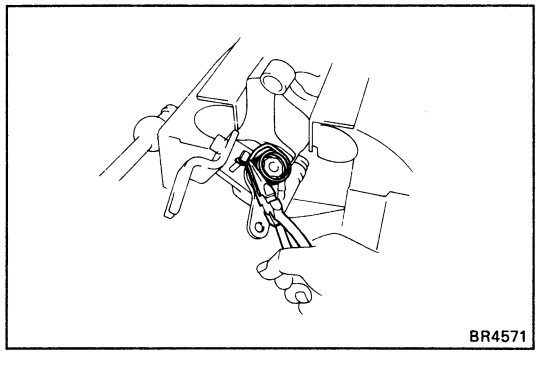

8. REMOVE TORSION SPRING FROM PARKING BRAKE CRANK

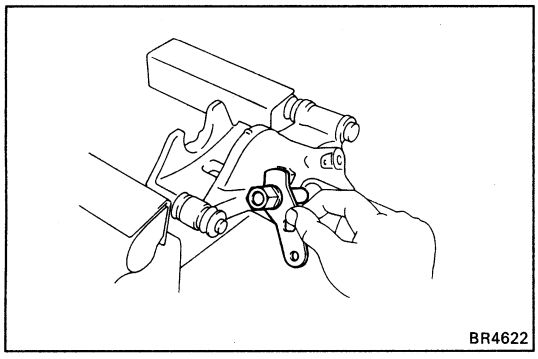
BR4622

9. REMOVE PARKING BRAKE CRANK FROM CYLINDER

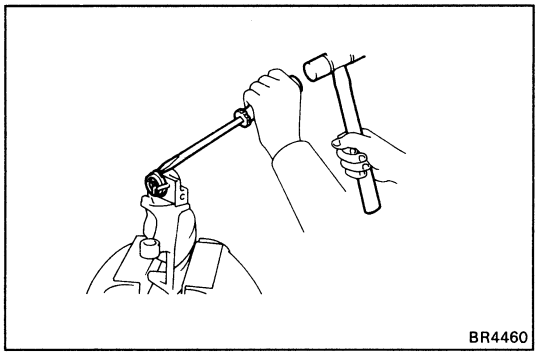
BR4460

10. REMOVE PARKING BRAKE CRANK BOOT

Using a chisel and hammer, tap out the parking brake crank boot.

11. REMOVE CABLE SUPPORT BRACKET

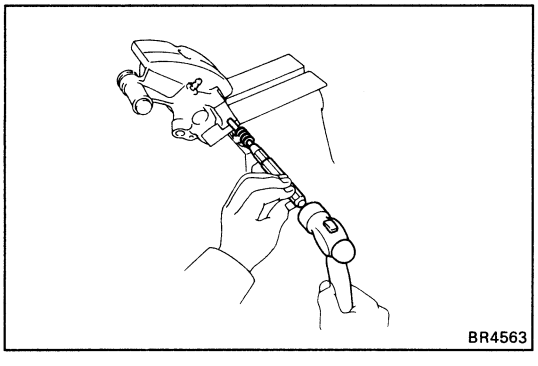
BR4563

12. REMOVE STOPPER PIN

Using a pin punch, tap out the pin.

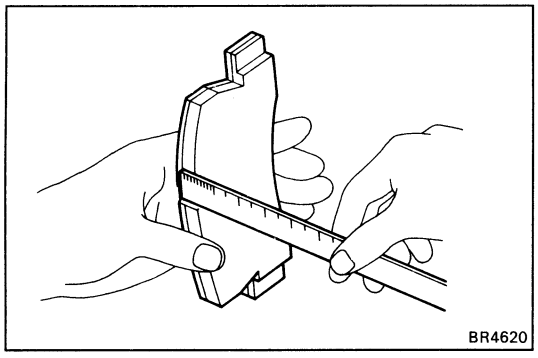
BR4620

INSPECTION OF REAR BRAKE COMPONENTS

1. MEASURE PAD LINING THICKNESS

Standard thickness: 10.0 mm (0.394 in.)
Minimum thickness: 1.0 mm (0.039 in.)

Replace the pad if the thickness is less than the minimum or if it shows sign of uneven wear.

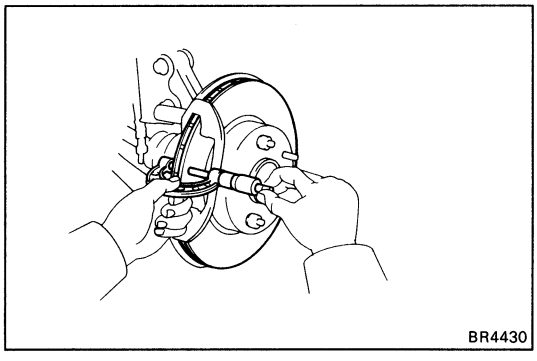
BR4430

2. MEASURE ROTOR DISC THICKNESS

Standard thickness: 16.0 mm (0.630 in.)
Minimum thickness: 15.0 mm (0.591 in.)

If the disc is scored or worn, or if thickness is less than minimum, repair or replace the disc.

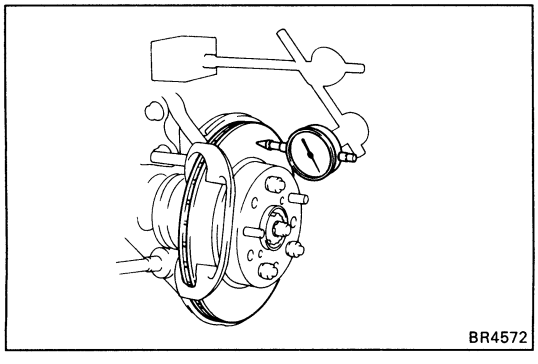
BR4572

3. MEASURE ROTOR DISC RUNOUT

HINT: Before measuring the runout, confirm that the rear hub bearing play is within specification.

Measure the rotor disc runout at 10 mm (0.39 in.) from the outer edge of the rotor disc.

Maximum disc runout: 0.10 mm (0.0039 in.)

If the runout is greater than the maximum, replace the disc.

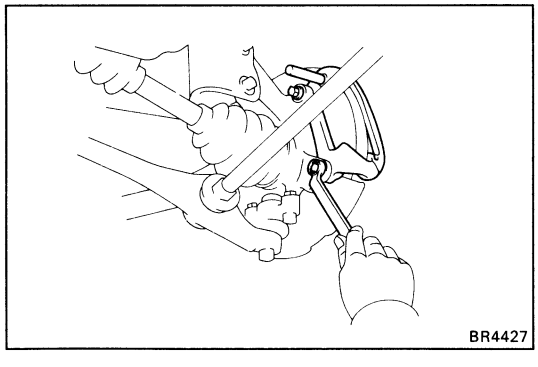
BR4427

4. IF NECESSARY, REPLACE ROTOR DISC

(a) Remove the disc brake cylinder mounting from the dust cover.

(b) Remove the hub nuts and rotor disc.

(c) Install a new rotor disc and temporarily fasten the disc with hub nuts.

(d) Install the torque plate to the rear axle carrier.

Torque: 600 kg-cm (43 ft-lb, 59 N·m)

ASSEMBLY OF CYLINDER

(See page BR-33)

1. **APPLY LITHIUM SOAP BASE GLYCOL GREASE TO PARTS INDICATED BY ARROWS**

   HINT: Pack the lithium soap base glycol grease into areas marked "A".

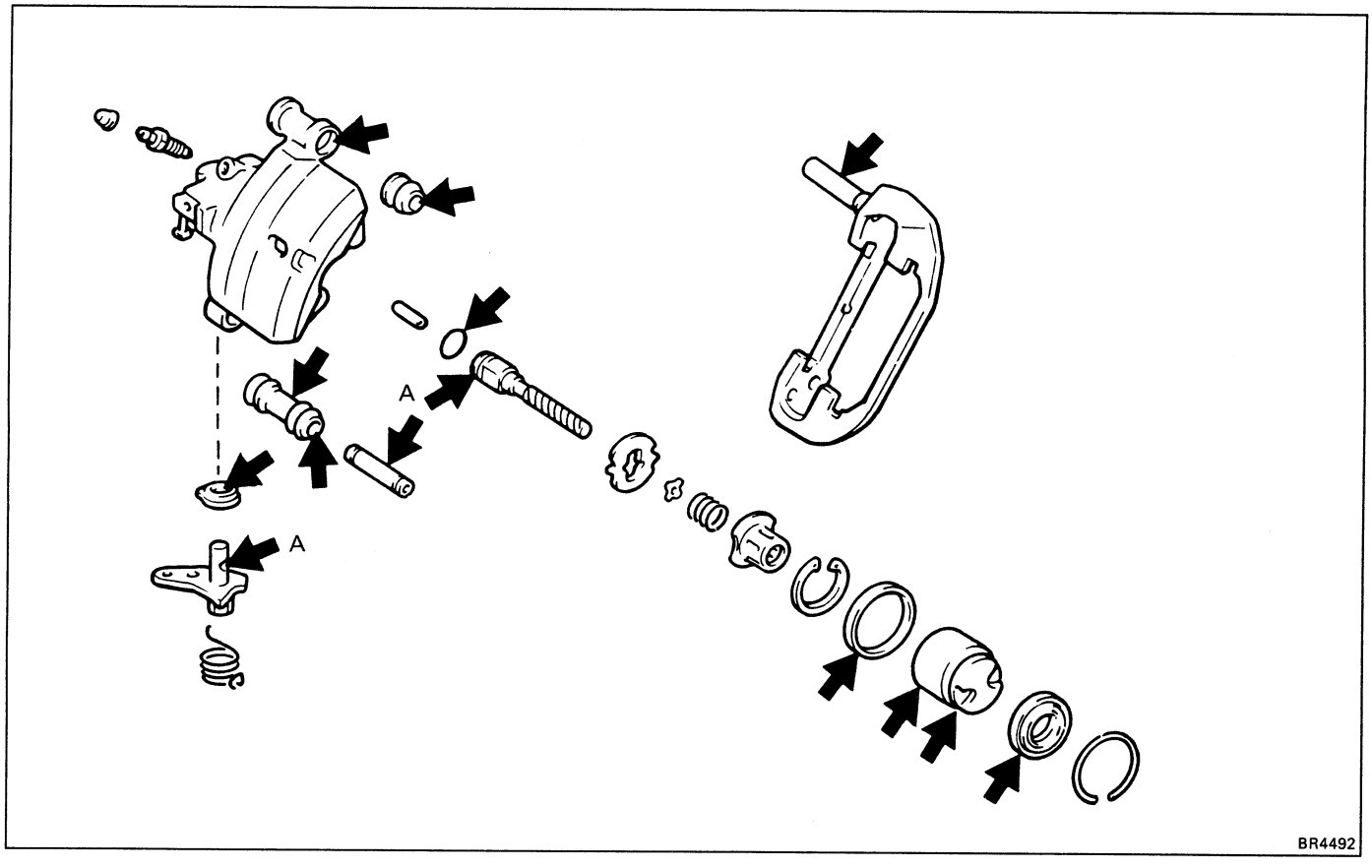

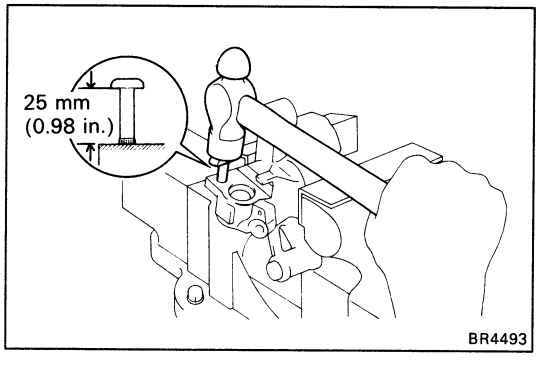

2. **INSTALL STOPPER PIN**

   Tap in the pin to the brake cylinder until the stopper pin extends 25 mm (0.98 in.).

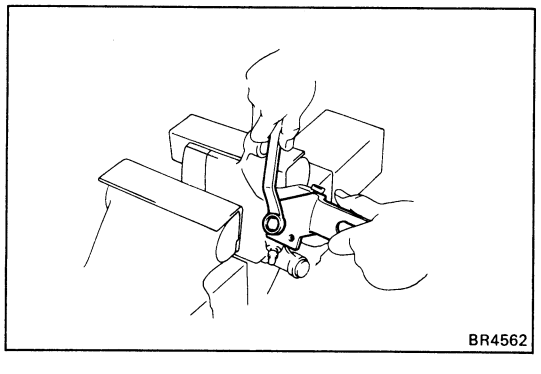

3. **INSTALL CABLE SUPPORT BRACKET**

   Torque: 475 kg-cm (34 ft-lb, 47 N·m)

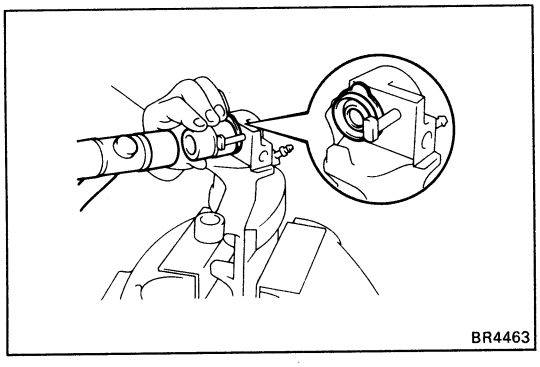

4. INSTALL PARKING BRAKE CRANK BOOT

(a) Using a 24 mm socket wrench and hammer, tap in new parking brake crank boot shown in the figure.

(b) Confirm that the metal plate portion of the parking brake crank boot fits snugly in the cylinder.

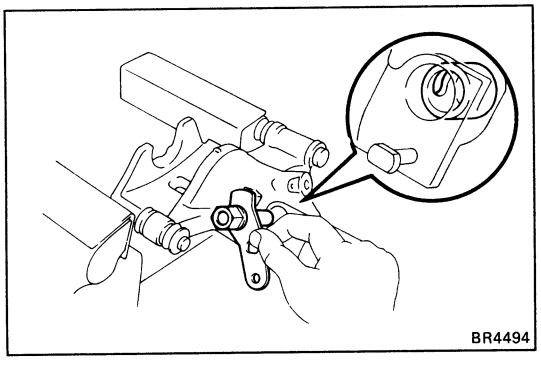

5. INSTALL PARKING BRAKE CRANK

(a) Check that the needle roller bearing is not covering the cylinder hole.

(b) Install the parking brake crank in cylinder.

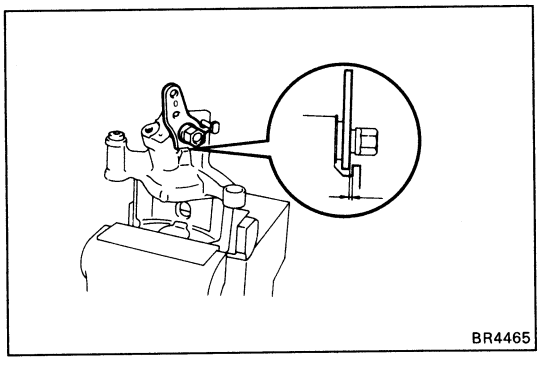

(c) Check that there is clearance between the parking brake crank and cylinder.

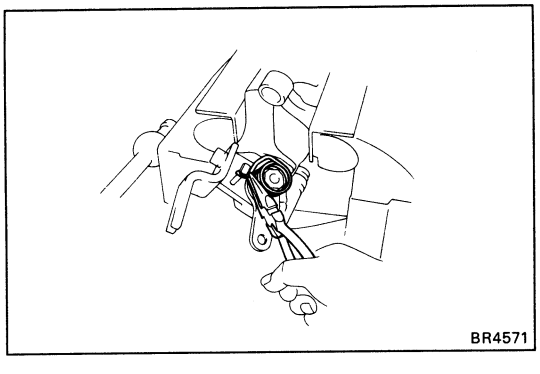

7. INSTALL TORSION SPRING

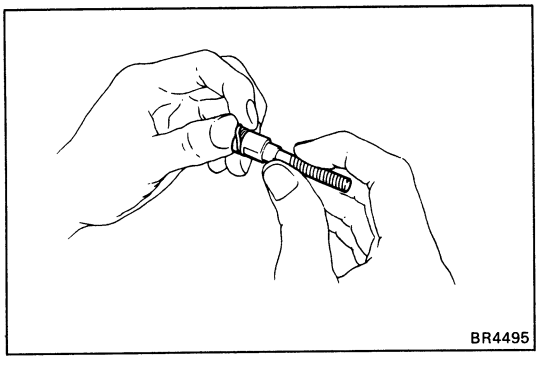

8. INSTALL O-RING TO ADJUSTING BOLT

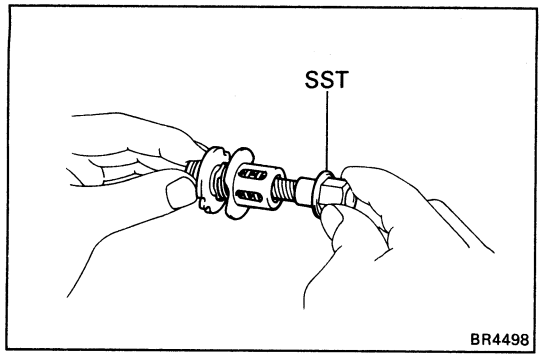

9. INSTALL ADJUSTING BOLT SUB ASSEMBLY

(a) Assemble the parking brake stopper, spring plate, spring, spring retainer and parking brake strut to the adjusting bolt, and using SST, fully tighten them down by hand.

SST 09756-00010

HINT:

- Position the inscribed surface of the stopper upward.
- Align the notches of the spring retainer and stopper.

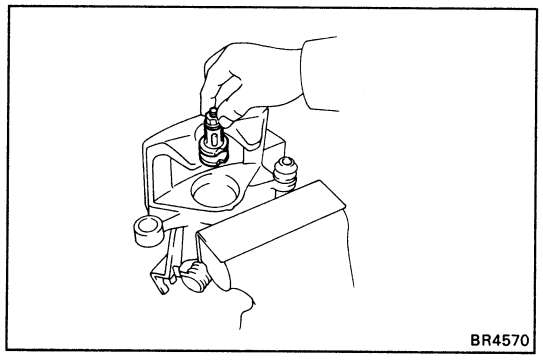

(b) Install the adjusting bolt sub-assembly into the cylinder.

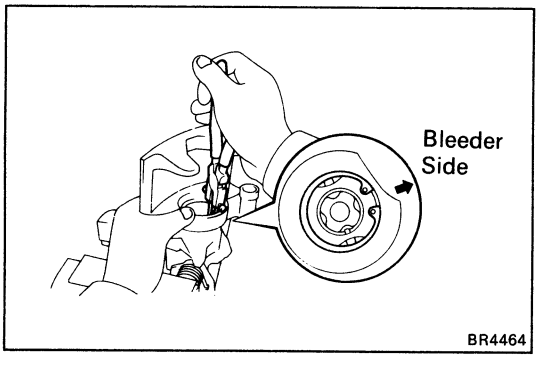

(c) Using snap ring pliers, install the snap ring.

HINT: Face the snap ring opening toward the bleeder side.

(d) Remove the SST.

SST 09756-00010

(e) Firmly pull up the adjusting bolt by hand and insure that it does not move.

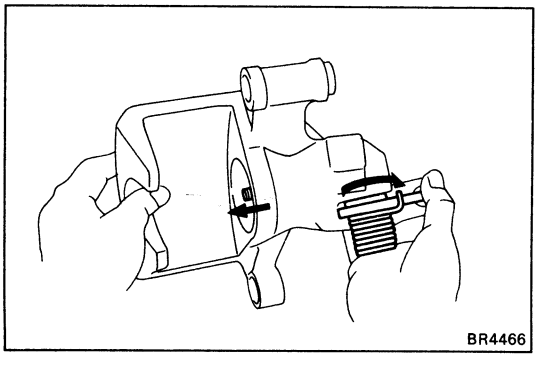

10. OPERATIONAL CHECK

Move the parking brake crank by hand and insure that the adjusting bolt moves smothly.

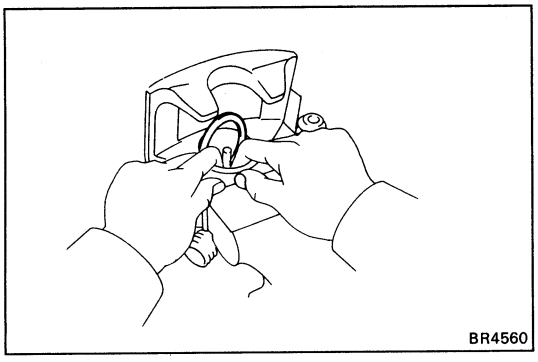
BR4560

11. INSTALL PISTON SEAL IN CYLINDER

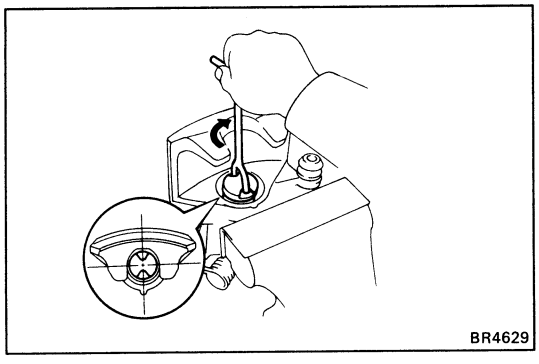
BR4629

12. INSTALL PISTON IN CYLINDER

Using SST, slowly turn the piston clockwise until the piston turns freely, then alin the cylinder protrusion and piston stopper groove.

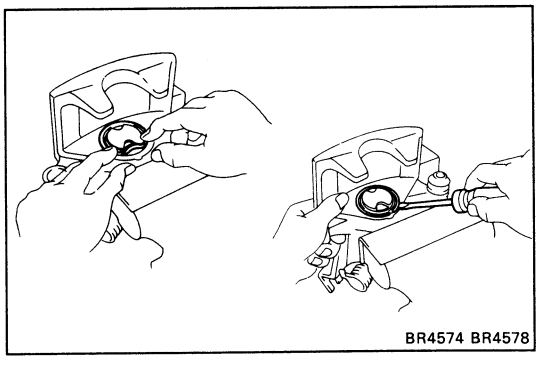
BR4574 BR4578

13. INSTALL CYLINDER BOOT AND SET RING IN CYLINDER

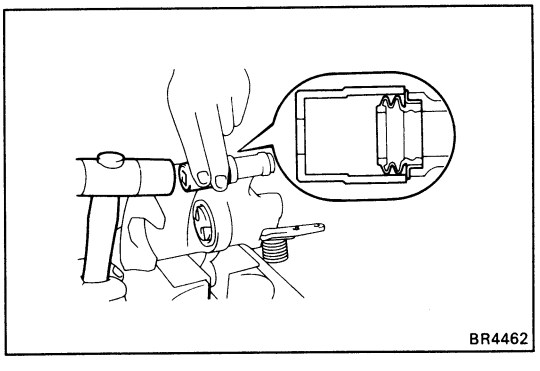
BR4462

14. INSTALL MAIN PIN BOOT

(a) Using a 19 mm socket wrench and hammer, tap in new main pin boot into the cylinder.

(b) Confirm that the metal plate portion of the main pin boot fits snugly in the cylinder.

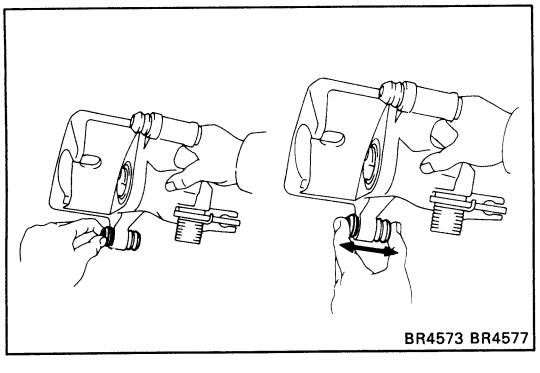
BR4573 BR4577

15. INSTALL DUST BOOT AND SLIDING BUSHING

(a) Install the dust boot.

(b) Install the bushing into the boot, with the flange facing inside.

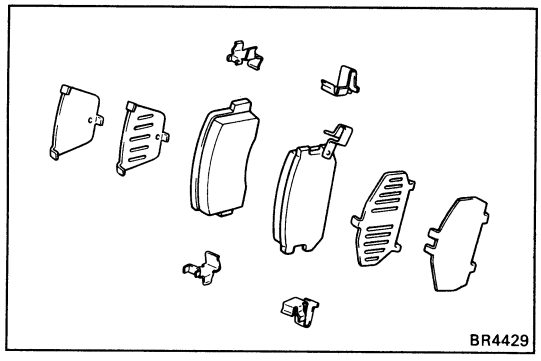
BR4429

INSTALLATION OF CYLINDER

(See page BR-33)

1. INSTALL FOLLOWING PARTS:

(a) Two pad guide plats

(b) Two anti-rattle springs

(c) Four anti-squeal shims

(d) Two brake pads
(See step 7 and 8 on pages BR-26 and 27)

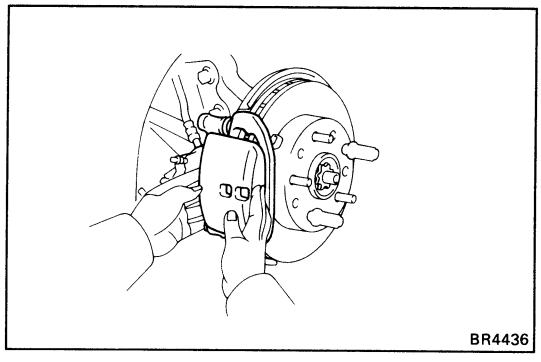
BR4436

2. INSTALL CYLINDER

(a) Install the cylinder onto the main pin.

HINT: Make sure that the boot end is installed into the groove of the main pin.

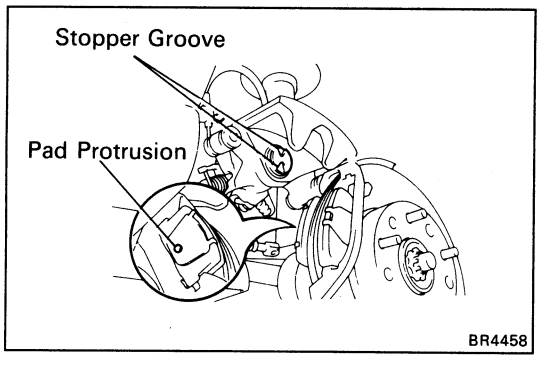

BR4458

(b) Fit the pad protrusion into the piston stopper groove, and install the cylinder.

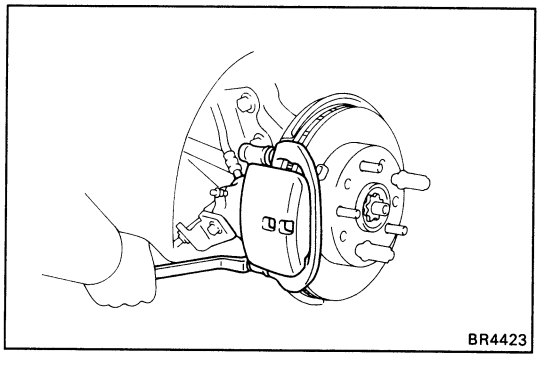
BR4423

(c) Install and torque the installation bolt.

Torque: 200 kg-cm (14 ft-lb, 20 N·m)

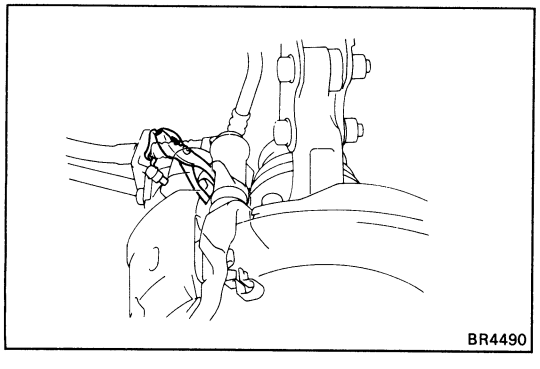
BR4490

3. CONNECT PARKING BRAKE CABLE

(a) Install the parking brake cable to the cable support bracket and install the retainer.

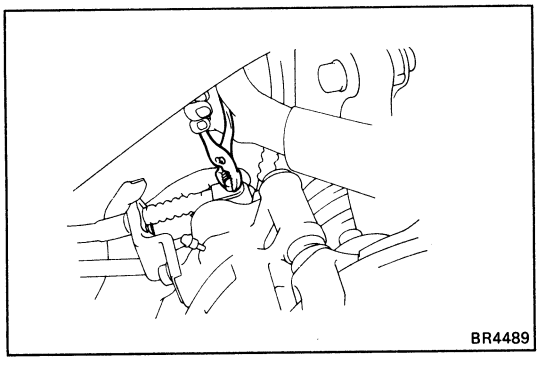

(b) Install the hole pin while pushing the parking brake lever, and install the clip.

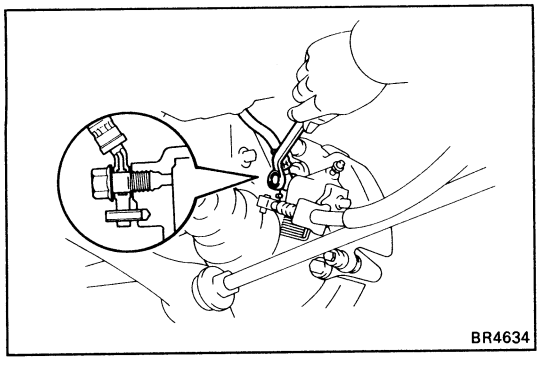

4. CONNECT BRAKE HOSE

Install the flexible hose on the brake cylinder with two new gaskets.

Torque: 310 kg-cm (22 ft-lb, 30 N·m)

HINT: Insert the flexible hose lock securely in the lock hole in the brake cylinder.

5. FILL BRAKE RESERVOIR WITH BRAKE FLUID AND BLEED BRAKE SYSTEM (See page BR-6)

6. CHECK FOR FLUID LEAKAGE

7. ADJUST REAR BRAKE

Depress the brake pedal several times and adjust the rear brake automatically.

PROPORTIONING AND BY-PASS VALVE (P & BV)

INSPECTION OF FLUID PRESSURE

1. INSTALL LSPV GAUGE (SST) AND BLEED AIR

SST 09709-29017

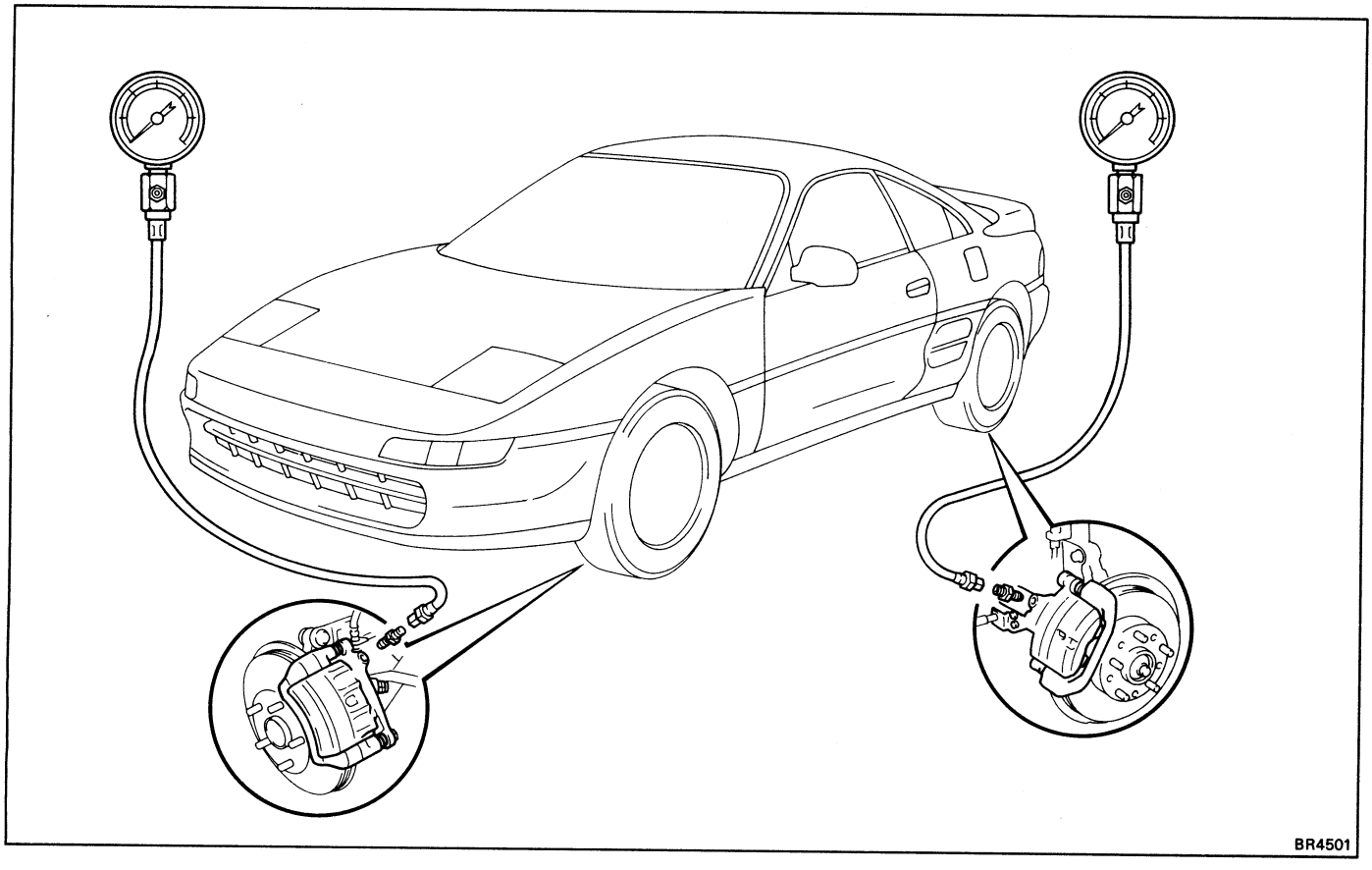

2. RAISE MASTER CYLINDER PRESSURE AND CHECK REAR WHEEL CYLINDER PRESSURE

Specifications

	Master cylinder pressure	Rear Wheel cylinder pressure
5S-FE	30 kg/cm² (427 psi, 2,942 kPa)	30 kg/cm² (427 psi, 2,942 kPa)
	80 kg/cm² (1,138 psi, 7,845 kPa)	60 kg/cm² (853 psi, 5,884 kPa)
3S-GTE	60 kg/cm² (853 psi, 5,884 kPa)	60 kg/cm² (853 psi, 5,884 kPa)
	100 kg/cm² (1,422 psi, 9,807 kPa)	84 kg/cm² (1,195 psi, 8,238 kPa)

If the rear wheel cylinder pressure is incorrect, replace the P & B valve assembly.

3. BLEED BRAKE SYSTEM

4. CHECK FOR FLUID LEAKAGE

ANTI-LOCK BRAKE SYSTEM (ABS)

Description

- The ABS is a brake system which controls the wheel cylinder hydraulic pressure of all four wheels during sudden braking and braking on slippery road surfaces, preventing the wheels from locking. This ABS provides the following benefits:
  (1) Enables steering round and obstacle with a greater degree of certainly even when panic braking.
  (2) Enables stopping in a panic brake while keeping effect upon stability and steerability to minimum, even on curves.
- The function of the ABS is to help maintain directional stability and vehicle steerability on most road conditions. However, the system cannot prevent the vehicle from skidding if the cornering speed limit is exceeded.
- In case a malfunction occurs, a diagnosis function and fail-safe system have been adopted for the ABS to increase serviceability.

FUNCTION OF COMPONENTS

Component	Function
Front Speed Sensor	Detects the wheel speed of each of the left and right front wheels.
Rear Speed Sensor	Detects the wheel speed of each of the left and right rear wheels.
ABS Warning Light	Lights up to alert the driver when trouble has occured in the Antilock Brake System.
Actuator	Controls the brake fluid pressure to each disc brake cylinder through signals from the computer.
ABS ECU	From the wheel speed signals from each sensor, it calculates acceleration, deceleration and slip values and sends signals to the actuator to control brake fluid pressure.

LOCATION OF SYSTEM PARTS

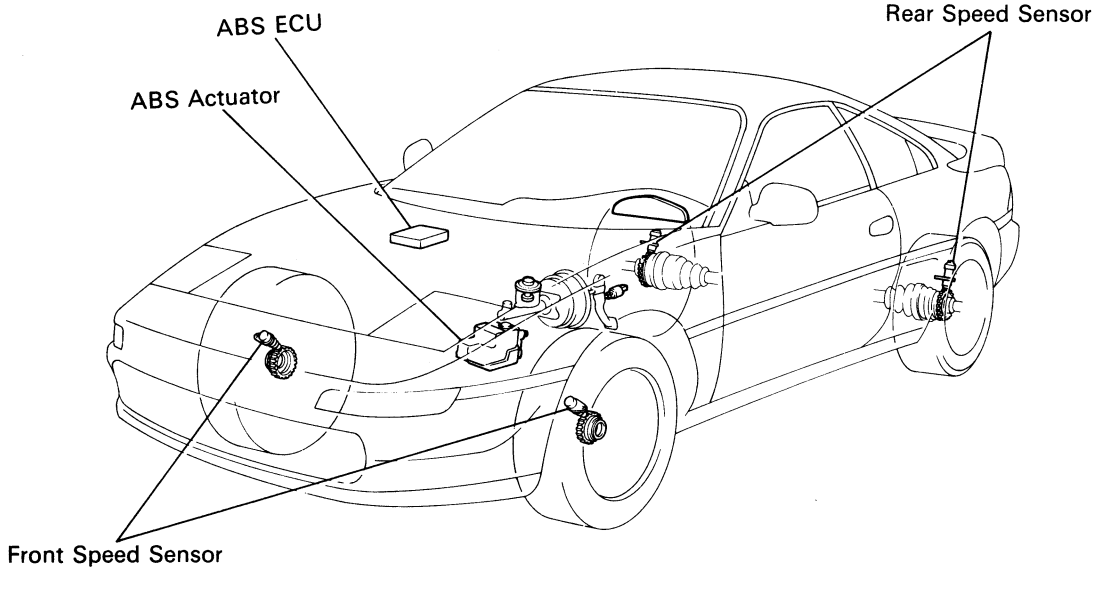

WIRING DIAGRAM

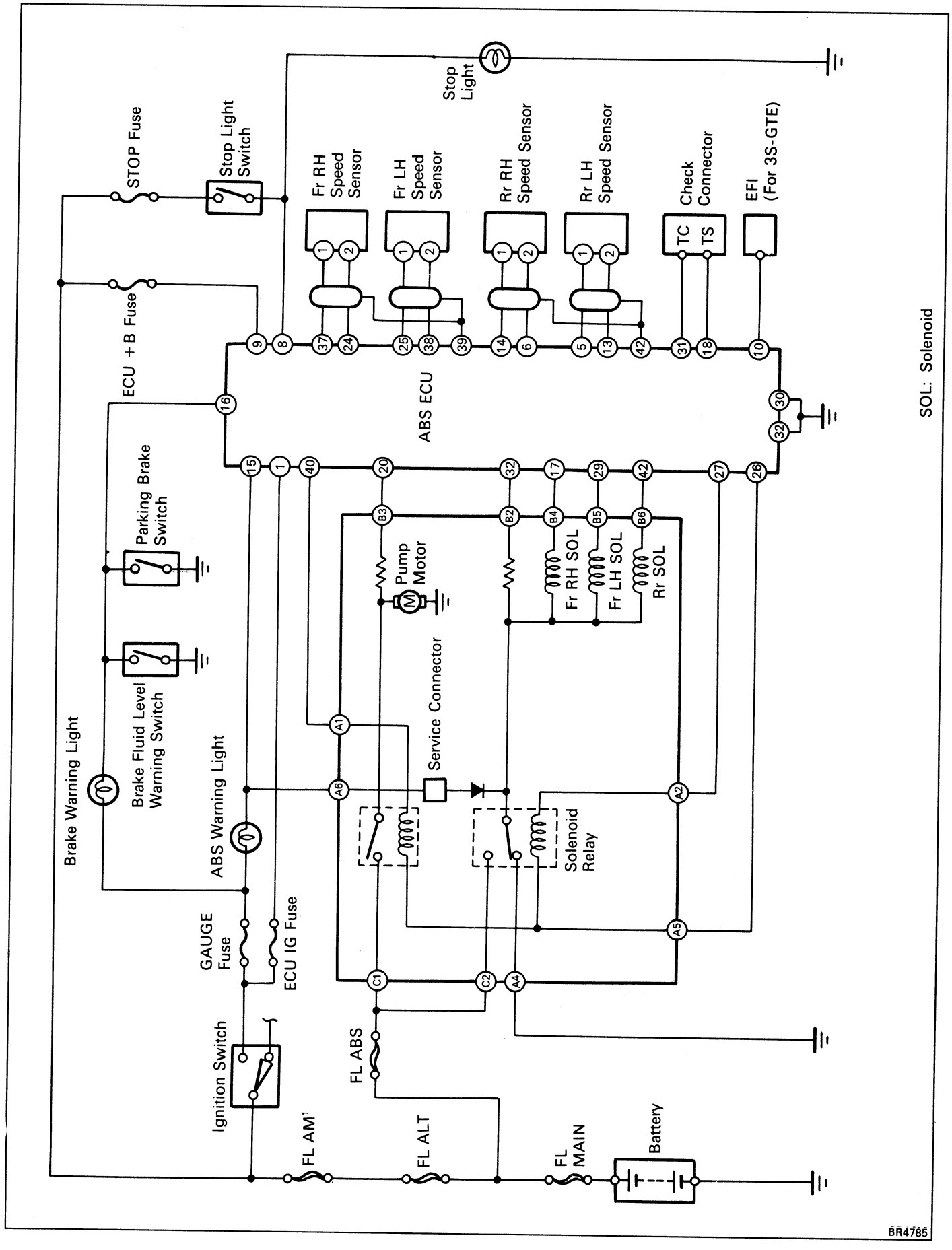

CONNECTORS

ABS Actuator

CONNECTOR A

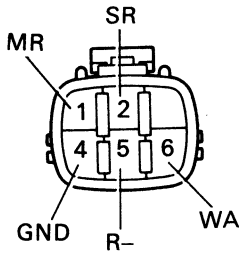

CONNECTOR B

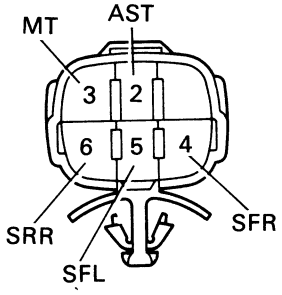

CONNECTOR C

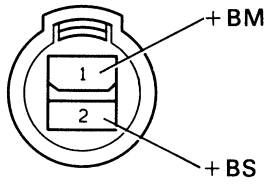

Front Speed Sensor (LH)

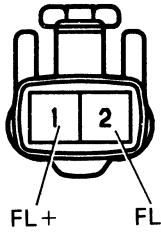

Front Speed Sensor (RH)

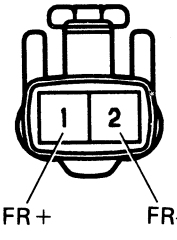

Rear Speed Sensor (LH)

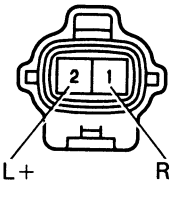

Rear Speed Sensor (RH)

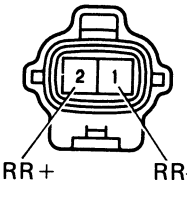

ABS ECU

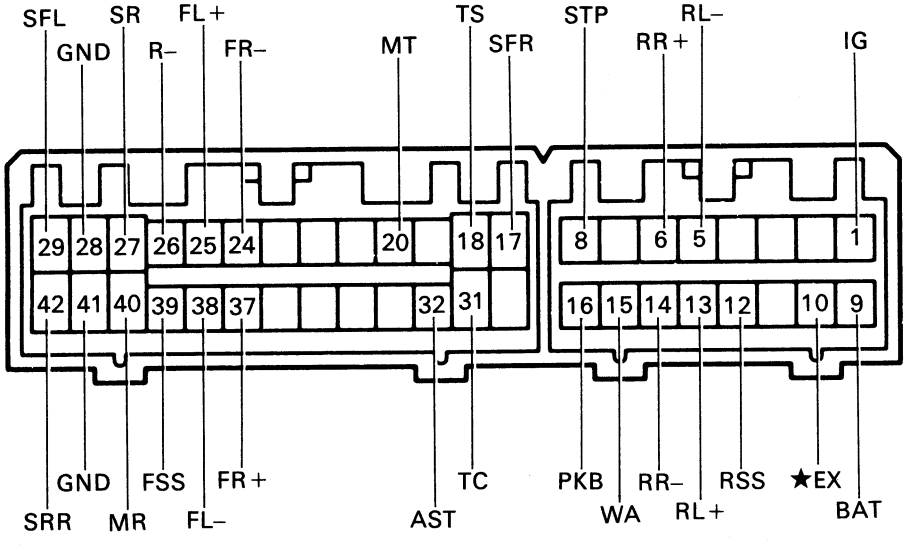

★ For 3S-GTE

BR4625 BR4626 ID-2-2
le-2-1-T le-2-1-T
le-2-2-T le-2-2-T
BR4078

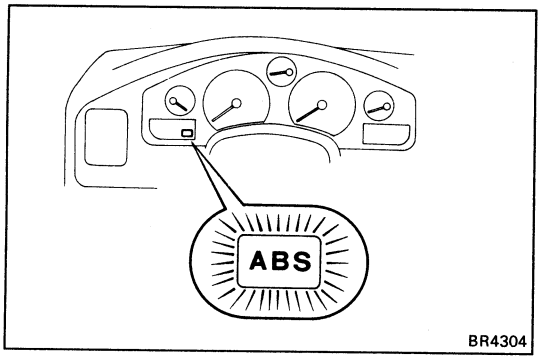

Diagnosis System

DESCRIPTION

If a malfunction occurs, the system will identify the problem and the ECU will stores the codes for the trouble items.

At the same time, the system informs the driver of a malfunction via the "ABS" warning light in the combination meter.

To identify the trouble by the number of blinks (diagnostic code) of the warning light turn on the ignition switch, disconnect the service connector, and use SST to connect Tc and E1 of the check connector.

In the event of two codes, that having the smallest number (code) will be identified first.

HINT: The warning light does not show the diagnostic codes while the vehicle is running.

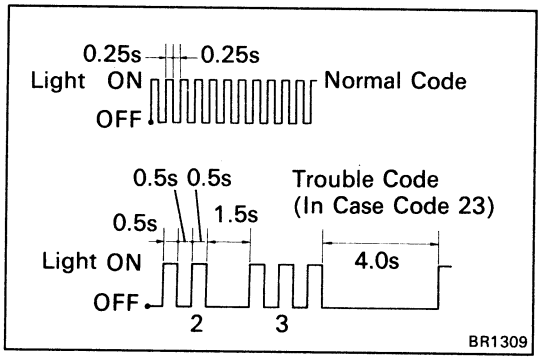

INSPECTION OF DIAGNOSIS SYSTEM

1. INSPECT BATTERY VOLTAGE

Inspect that the battery voltage is about 12 V.

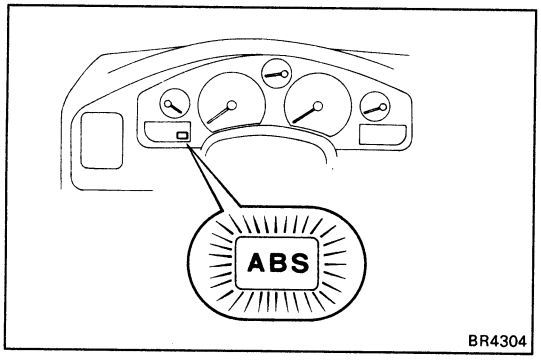

2. CHECK THAT WARNING LIGHT TURNS ON

(a) Turn the ignition switch on.

(b) Check that the "ABS" warning light turns on for 3 seconds.

If not, inspect and repair or replace the fuse, bulb and wire harness.

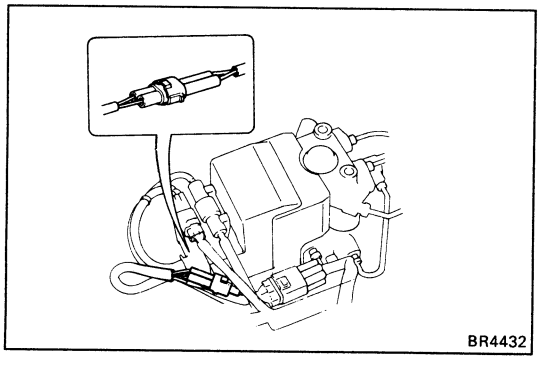

3. READ DIAGNOSTIC CODE

(a) Turn the ignition switch on.

(b) Disconnect the service connector.

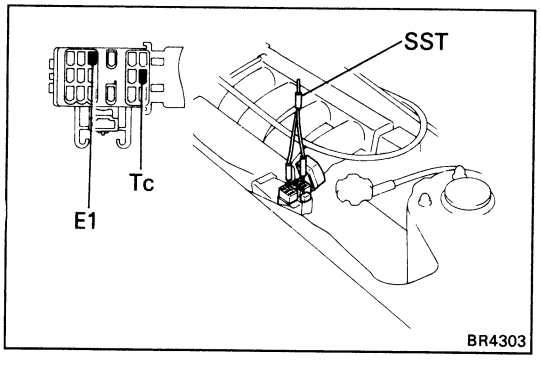

(c) Using SST, connect terminals Tc and E1 of the check connector.

SST 09843-18020

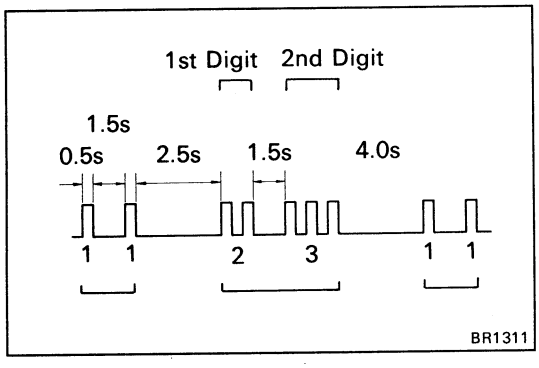

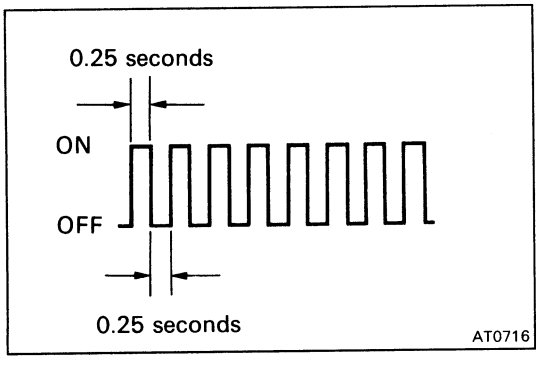

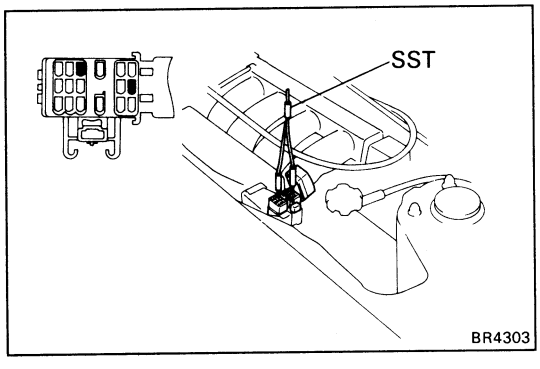

(d) In event of a malfunction, 4 seconds later the warning light will begin to blink. Read the number of blinks.
(See DIAGNOSTIC CODE on page BR-53)

HINT: The first number of blinks will equal the first digit of a two digit diagnostic code. After a 1.5 second pause, the 2nd number of blinks will equal the 2nd number of a two digit code. If there are two or more codes, there will be a 2.5 second pause between each, and indication will begin after 4.0 second pause from the smaller value and continue in order to larger.

(e) If the system is operating normally (no malfunction), the warning light will blink once every 0.5 seconds.

(f) Repair the system.

(g) After the malfunctioning components has been repaired, clear the diagnostic codes stored in the ECU.
(See page BR-54)

HINT: If you disconnect the battery cable while repairing, all diagnostic codes in the ECU will erased.

(h) Remove the SST from terminals Tc and E1 of the check connector.

SST 09843-18020

(i) Connect the service connector.

(j) Turn the ignition switch on, and check that the "ABS" warning light goes off after the warning light goes on for 3 seconds.

Code No.	Light Pattern	Diagnosis	Trouble Part
11	ON / OFF 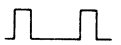	Open circuit in solenoid relay circuit	• Actuator inside wire harness • Solenoid relay • Wire harness and connector of solenoid relay circuit
12	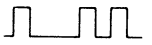	Short circuit in solenoid relay circuit	
13	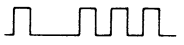	Open circuit in pump motor relay circuit	• Actuator inside wire harness • Pump motor relay • Wire harness and connector of pump motor relay circuit
14		Short circuit in pump motor relay circuit	
21	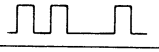	Open or short circuit in 3 position solenoid of front right wheel	• Actuator solenoid • Wire harness and connector of actuator solenoid circuit
22	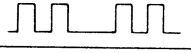	Open or short circuit in 3 position solenoid of front left wheel	
23		Open or short circuit in 3 position solenoid of rear wheels	
31	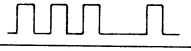	Front right wheel speed sensor signal malfunction	• Speed sensor • Sensor rotor • Wire harness and connector of speed sensor
32	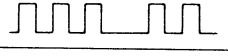	Front left wheel speed sensor signal malfunction	
33	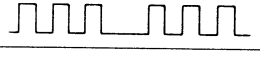	Rear right wheel speed sensor signal malfunction	
34	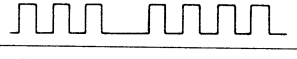	Rear left wheel speed sensor signal malfunction	
35	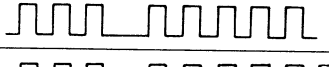	Open circuit in front left or rear right wheel speed sensor	
36	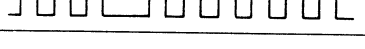	Open circuit in front right or rear left wheel speed sensor	
41		Abnormal battery voltage (9.5 V less than or 17 V more than)	• Battery • Voltage regulator
51		Pump motor of actuator locked or open circuit in pump motor circuit in actuator	• Pump motor, relay and battery • Wire harness, connector and ground bolt or actuator pump motor circuit
Always on	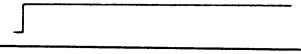	Malfunction in computer	• ECU

BR4418

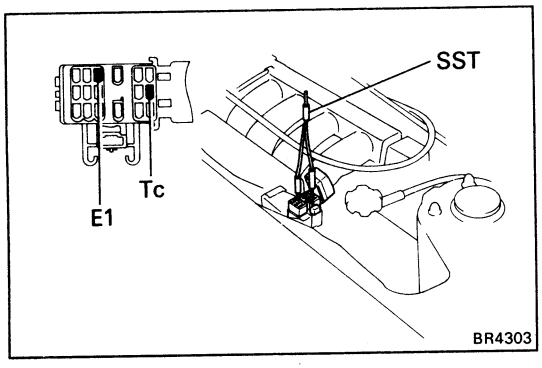

CLEARING OF DIAGNOSTIC CODES

CLEAR DIAGNOSTIC CODES

(a) Turn the ignition switch on.

(b) Using SST, connect terminals Tc and E1 of the check connector.

SST 09843-18020

HINT: Keep the vehicle stopped vehicle speed 0 km/h (0 mph).

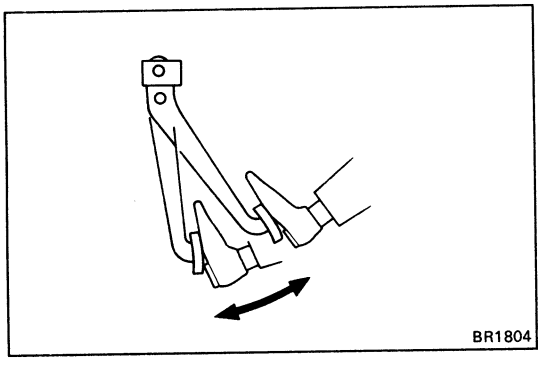

(c) Clear the diagnostic codes stored in ECU by depressing the brake pedal 8 or more times within 3 seconds.

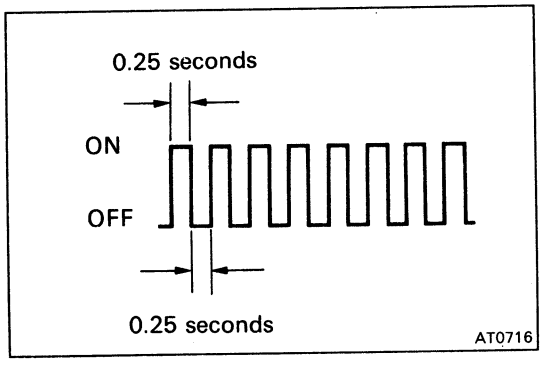

(d) Check that the warning light shows the normal code.

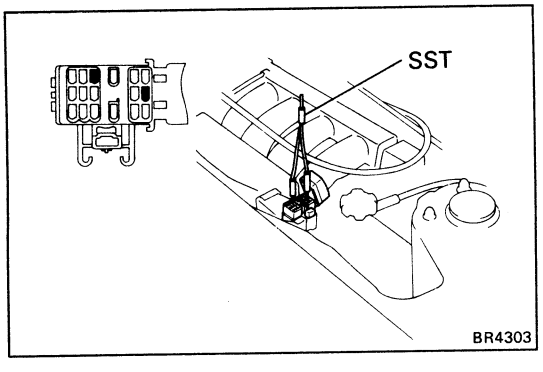

(e) Remove the SST from terminals Tc and E1 of the check connector.

SST 09843-18020

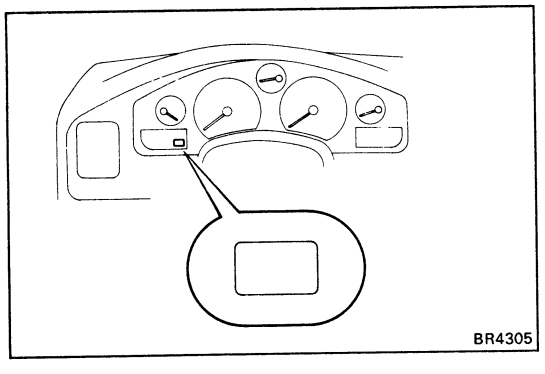

(f) Check that the warning light goes off.

Troubleshooting

Problem		No.
"ABS" warning light	Always comes on after ignition switch is turned on.	1
	Does not come on for 3 seconds after ignition switch on.	2
	Comes on and off.	3
	Comes on while running.	1
Brake working	Brakes pull.	4
	Braking inefficient.	4
	ABS operates at ordinary braking.	4
	ABS operates just before stopping at ordinary braking.	4
	Brake pedal pulsates abnormally while ABS is operating.	4
	Skidding noise occurs while ABS working. (ABS works inefficiently)	5

1	"ABS" warning light comes on.

Disconnect service connector and connect terminals Tc and E1 of check connector. (See page BR-51)

↓

Does warning light always come on or show the normal code? (Ignition switch on)

NO → See diagnostic code. (See page BR-53)

↓ YES

Continued on page BR-56

Continued from page BR-55

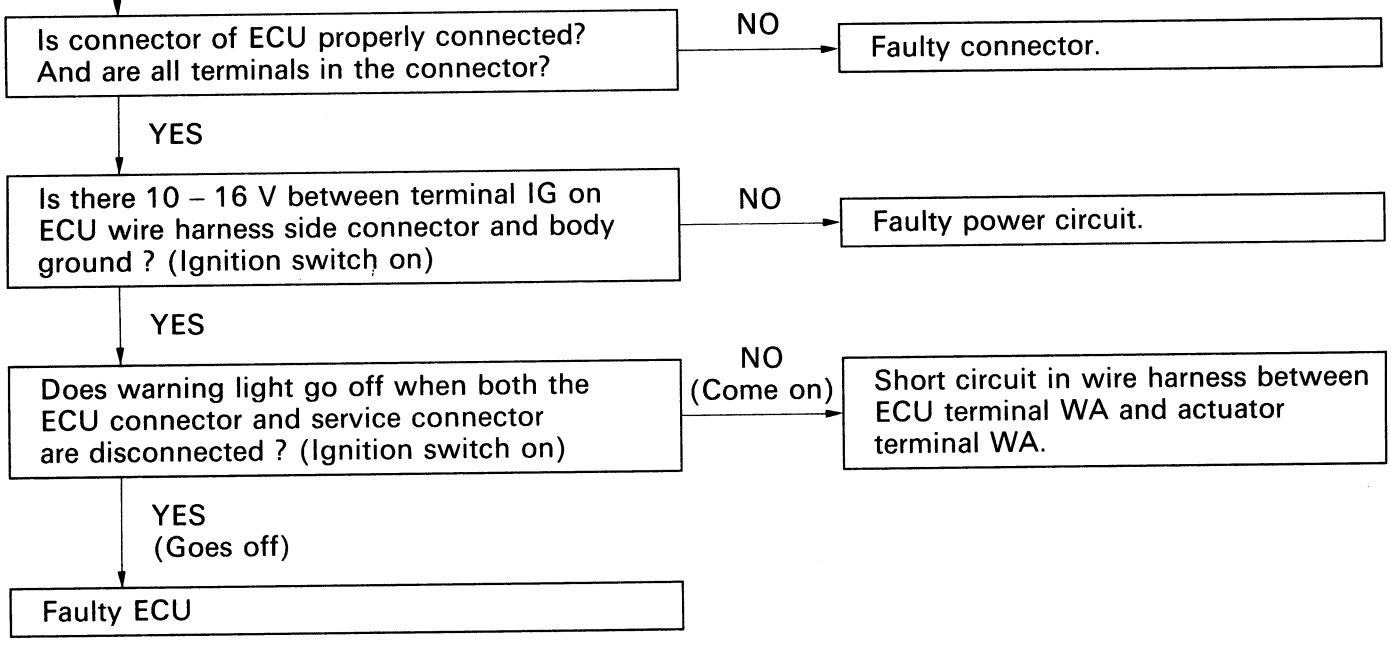

2	"ABS" warning light does not come on for 3 seconds after ignition switch on.

Disconnect service connector. and ground the terminal WA of the female side connector. (Ignition switch on)

↓

Does warning light come on? — NO → Bulb burned out or open circuit in wire harness between warning light and actuator terminal WA.

↓ YES

Disconnect connectors from ECU and actuator, and ground terminal WA of ECU wire harness side connector. (Ignition switch on)

↓

Does warning light come on? — NO → Open circuit in wire harness between computer terminal WA and warning light.

↓ YES

With ignition switch off, disconnect actuator connectors, and check continuity between terminal WA and AST on actuator side.

↓

Reverse tester leads and check again. Is there one way continuity between terminals? — NO → Short circuit in actuator inside diode.

↓ YES

Faulty ECU.

HINT: If the diode is short-circuited, a malfunction ECU terminal WA will occur. When inspecting the terminal, connect the ECU connecter and disconnect actuator connectors and service connector. Then turn the ignition switch on, and check that the warning light goes on. If it does, the ECU terminal is OK.

3	"ABS" warning light comes on and off.

- Check for short circuit in wire harness between terminal Tc and E1 or Ts and E_1 of check connector.

4	• Brakes pull. • Braking inefficient. • ABS operates at ordinary braking. • ABS operates just before stopping at ordinary braking. • Brake pedal pulsates abnormally while ABS working.

Disconnect service connector and connect terminals Tc and E1 of check connector. (See page BR-51)

↓

Does warning light show the diagnostic normal code ? (Ignition on) — NO → See diagnostic code. (See page BR-53)

↓ YES

Try speed sensor diagnosis system. Is sensor signal level OK? (See page BR-61) — NO → Inspect speed sensor, and replace if necessary.

↓ YES

Try speed sensor diagnosis system. Is sensor signal change OK? (See page BR-61) — NO → Inspect sensor rotor, and replace if necessary.

↓ YES

Are each speed sensor installed in place? And are each installation bolts tightened securely? — NO → Speed sensor installation faulty.

↓ YES

Is there foreign material or ferric chips on the sensor tip? — YES → Clean ships from the speed sensor.

↓ NO

Disconnect connector from ECU, inspect continuity between each speed sensor terminals on wire harness side. (See page BR-67)

↓ Continued on page BR-59

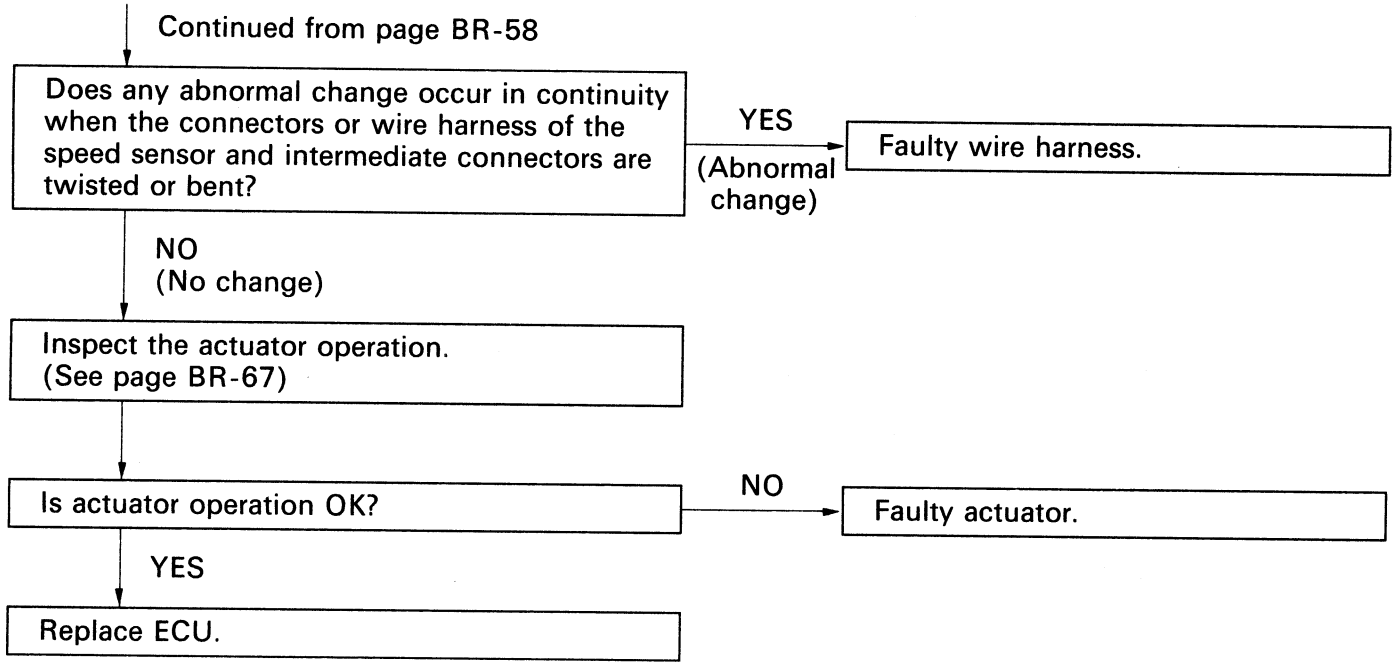
Continued from page BR-58
Does any abnormal change occur in continuity when the connectors or wire harness of the speed sensor and intermediate connectors are twisted or bent?
YES
(Abnormal change)
Faulty wire harness.
NO
(No change)
Inspect the actuator operation.
(See page BR-67)
Is actuator operation OK?
NO
Faulty actuator.
YES
Replace ECU.

5	Antilock brake system works inefficiently.

Disconnect service connector and connect terminals Tc and E1 of check connector. (See page BR-51)

↓

Does warning light show the diagnostic normal code? (Ignition switch on)

NO → See diagnostic code. (See page BR-53)

↓ YES

Is there battery voltage between ECU terminal STP and body ground when depressing brake pedal?

NO → Open circuit in stop light switch and/or wire harness.

↓ YES

Inspect the actuator operation. (See page BR-67)

Speed Sensor Diagnosis System

PRECAUTION

While checking the speed sensor diagnosis system, ABS does not work and brake system works as normal brake system.

INSPECTION OF DIAGNOSIS SYSTEM

1. INSPECT BATTERY VOLTAGE

Inspect that the battery voltage is about 12 V.

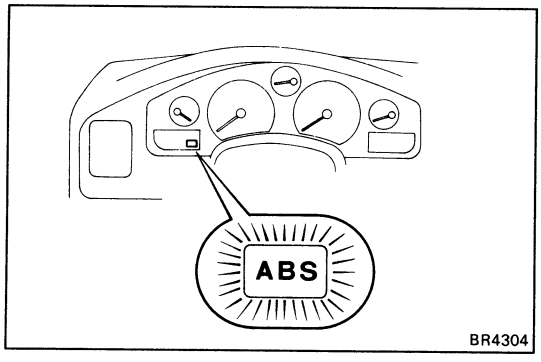

2. CHECK THAT WARNING LIGHT TURNS ON

(a) Turn the ignition switch on.

(b) Check that the "ABS" warning light turns on for 3 seconds.

If not, inspect and repair or replace the fuse, bulb and wire harness.

(c) Check that the "ABS" warning light turns off.

(d) Turn the ignition switch off.

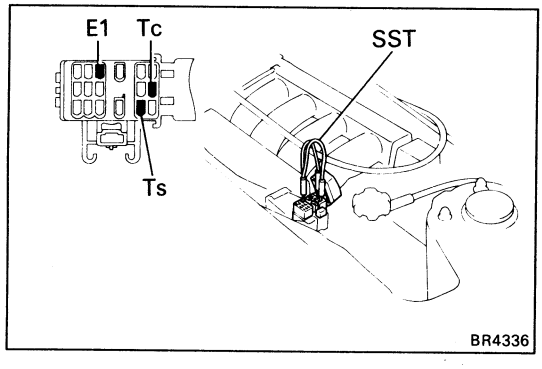

3. PERFORM FOLLOWING STEPS

(a) Using SST, connect terminals E1 and Tc, Ts of the check connector.

SST 09843-18020

(b) Pull the parking brake lever up, and start the engine.

HINT: Do not depress the brake pedal.

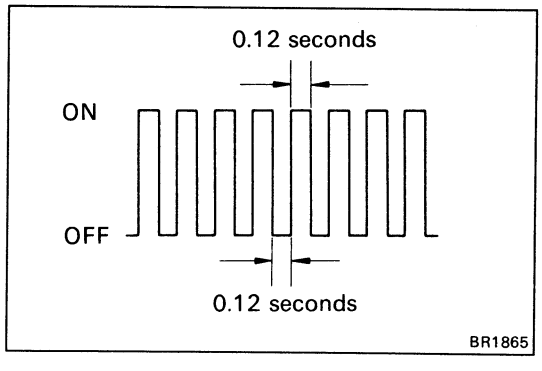

(c) Check that the warning light blinks about 4 times every 1 second as shown.

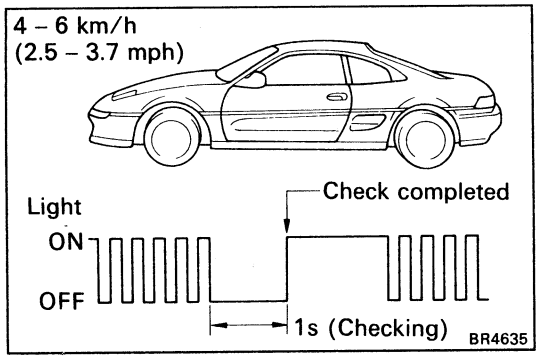

4. INSPECT SENSOR SIGNAL LEVEL

Drive the vehicle straight ahead at about 4 – 6 km/h (2.5 – 3.7 mph), and check that the warning light turns on after a 1 second pause.

If the warning light turns on without blinking when the vehicle speed is not within the specified speed range above, stop the vehicle and read the diagnostic code, and repair the malfunctioning parts.
(See step 6 on this page)

HINT: If the warning light turns on while the vehicle speed is within specified speed range above, the check is completed. And when the vehicle speed exceeds 6 km/h (3.7 mph), the warning light will blink again. In this condition, speed sensors are OK.

NOTICE: While the warning light is off, do not give any shocks to vehicle such as acceleration, deceleration, braking, shift change, steering or shocks from the road condition.

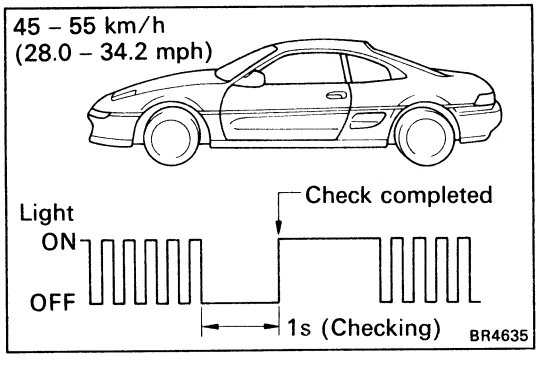

5. INSPECT SENSOR SIGNAL CHANGE

Drive the vehicle straight ahead at about 45 – 55 km/h (28.0 – 34.2 mph), and check that the warning light turns on after a 1 second pause.

If the warning light turns on without blinking when the vehicle speed is not within the specified speed range above, stop the vehicle and read the diagnostic code, and repair the malfunctioning parts. (See step 6 on this page)

HINT: If the warning light turns on while the vehicle speed is within specified speed range above, the check is completed. And when the vehicle speed is not within specified speed range, the warning light will blink again. In this condition, sensor rotors are OK.

NOTICE: While the warning light is off, do not give any shocks to vehicle such as acceleration, deceleration, braking, shift change, steering or shocks from the road condition.

6. READ DIAGNOSTIC CODE

Stop the vehicle, and warning light will begin to blink. Read the number of blinks. (See DIAGNOSTIC CODE on page BR-64)

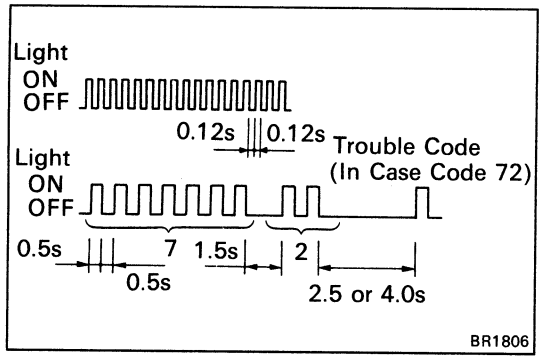

HINT: The first number of blinks will equal the first digit of a two digit diagnostic code. After a 1.5 second pause, the 2nd number of blinks will equal the 2nd number of a two digit code. If there are two or more codes, there will be a 2.5 second pause between each code, and then indication will begin again after a 4.0 second pause, continuing in order from the smaller value up to the larger one.

7. REPAIR MALFUNCTIONING PARTS

Repair or replace the malfunctioning parts.

8. PERFORM FOLLOWING STEPS

(a) Turn the ignition switch off.

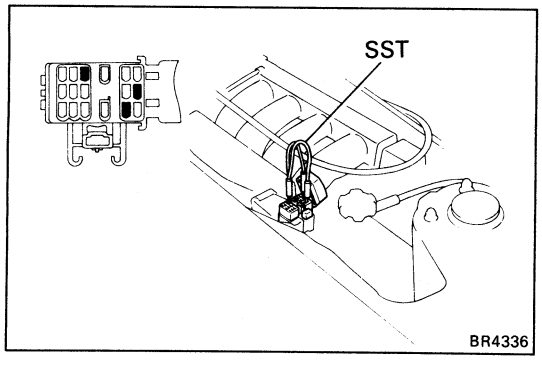

(b) Remove the SST from terminals E1 and Tc, Ts of the check connector.

DIAGNOSTIC CODE

Code No.	Light Pattern	Diagnosis	Malfunctioning Part
		All speed sensors and sensor rotors are normal	
71		Low voltage of front right speed sensor signal	● Front right speed sensor ● Sensor installation
72		Low voltage of front left speed sensor signal	● Front left speed sensor ● Sensor installation
73		Low voltage of rear right speed sensor signal	● Rear right speed sensor ● Sensor installation
74		Low voltage of rear left speed sensor signal	● Rear left speed sensor ● Sensor installation
75		Abnormal change of front right speed sensor signal	● Front right sensor rotor ● Front sealed wire
76	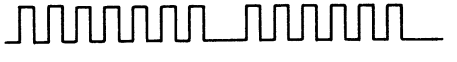	Abnormal change of front left speed sensor signal	● Front left sensor rotor ● Front sealed wire
77	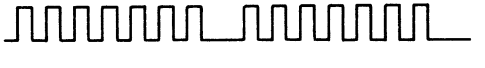	Abnormal change of rear right speed sensor signal	● Rear right sensor rotor ● Rear sealed wire
78	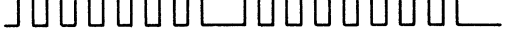	Abnormal change of rear left speed sensor signal	● Rear left sensor rotor ● Rear sealed wire

BR1807

ABS Actuator

REMOVAL AND INSTALLATION OF ABS ACTUATOR

Remove and install the parts as shown.

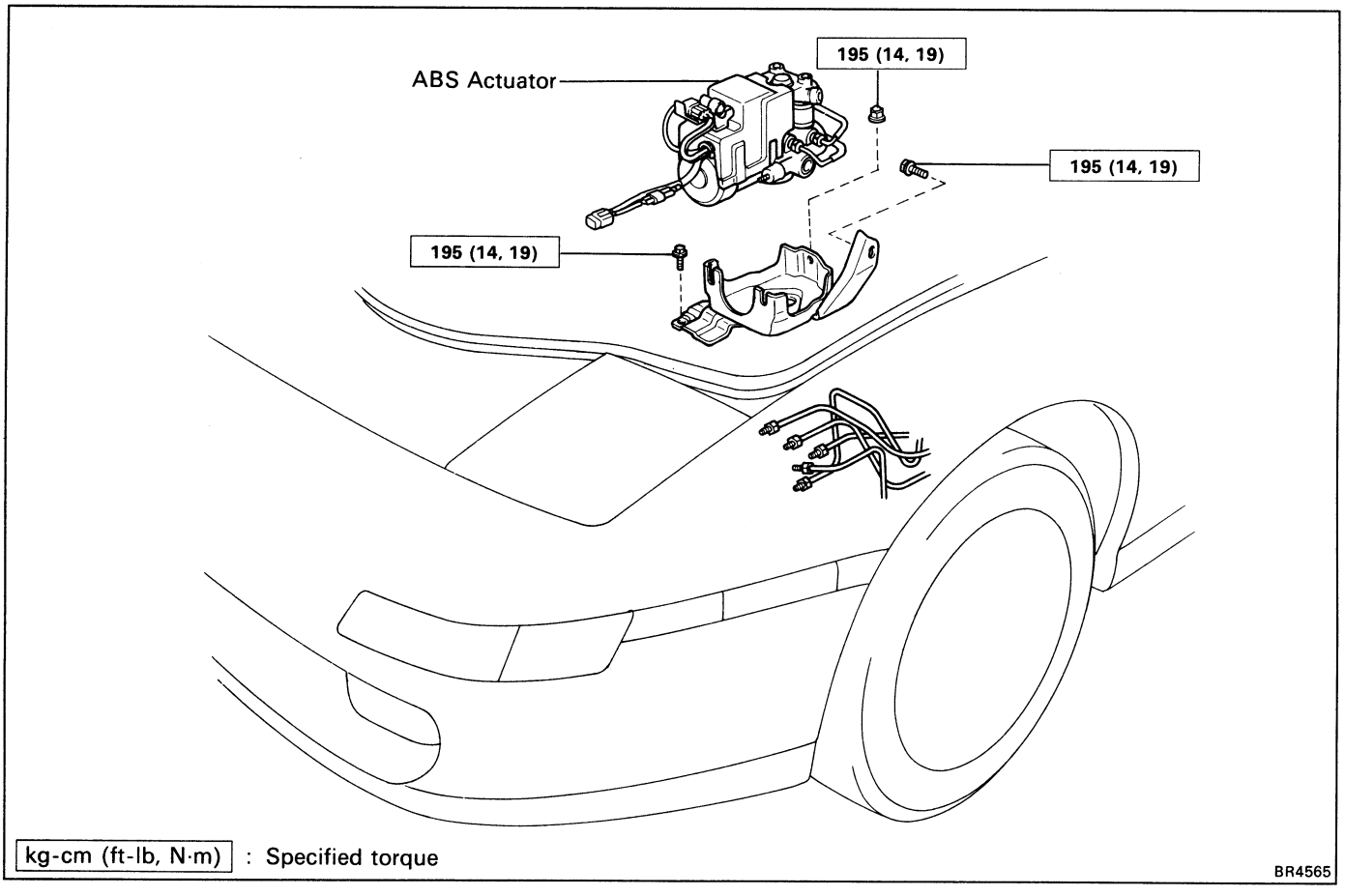

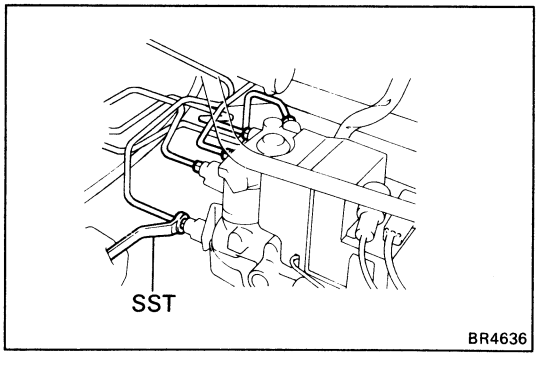

1. **DISCONNECT AND CONNECT BRAKE TUBE**

   Using SST, disconnect and connect the brake tubes from/to the ABS actuator.

   SST 09751-36011

   Torque: 155 kg-cm (11 ft-lb, 15 N·m)

2. **FILL BRAKE RESERVOIR WITH BRAKE FLUID AND BLEED BRAKE SYSTEM**
   (See page BR-6)

DISASSEMBLY AND ASSEMBLY OF ABS ACTUATOR

Remove and install the parts as shown.

COMPONENTS

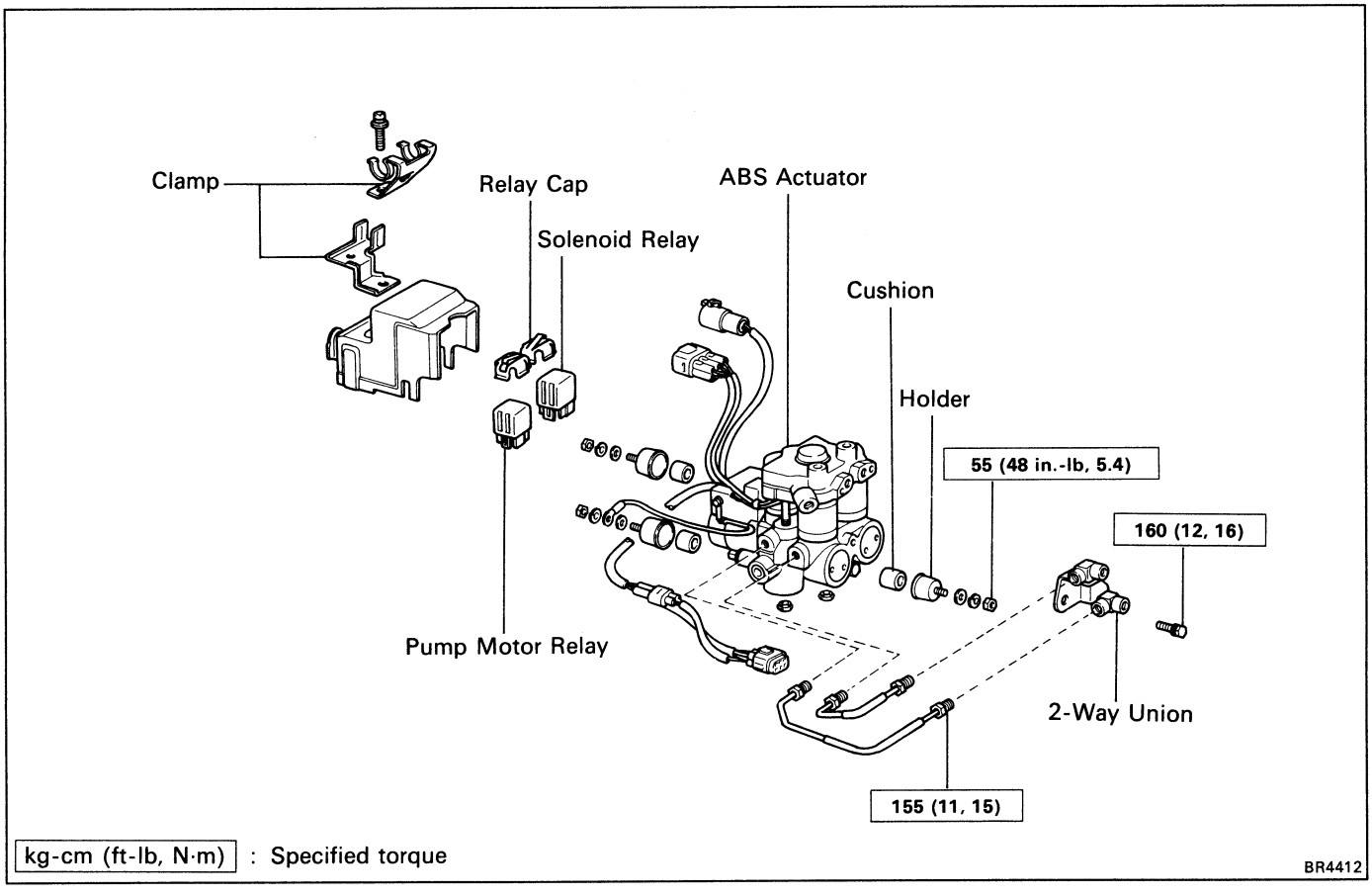

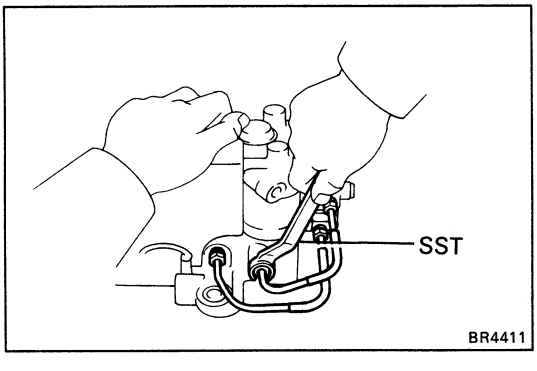

(MAIN POINT OF REMOVAL AND INSTALLATION)

1. DISCONNECT AND CONNECT BRAKE TUBE

Using SST, disconnect and connect the brake tubes from/to the ABS actuator.

SST 09751-36011

Torque: 155 kg-cm (11 ft-lb, 15 N·m)

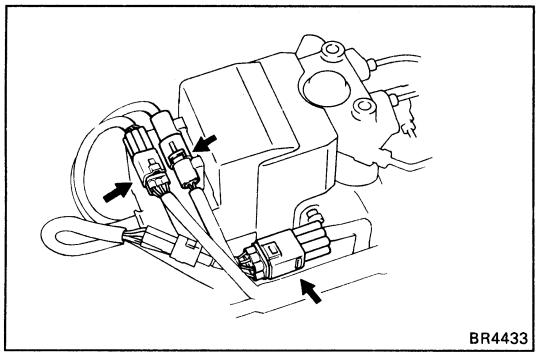
BR4433

INSPECTION OF ABS ACTUATOR OPERATION

1. INSPECT BATTERY VOLTAGE

Battery voltage: 10 – 14.5 V

2. DISCONNECT CONNECTORS

Disconnect the three connectors from the actuator as shown.

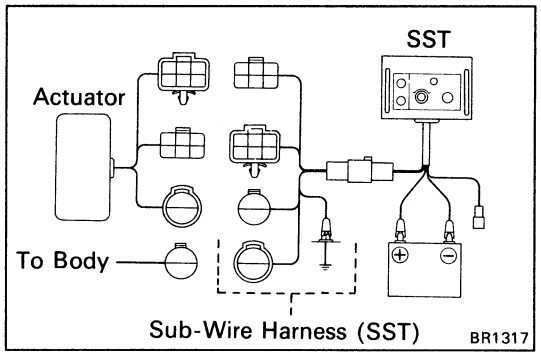

BR1317

3. CONNECT ACTUATOR CHECKER (SST) TO ACTUATOR

(a) Connect the actuator checker (SST) to the actuator and body side wire harness through the sub-wire harness (SST) as shown.

SST 09990-00150

(b) Connect the red cable of the checker to the battery positive (+) terminal and black to the negative (–) terminal. Connect the black cable of the sub-wire harness to the battery negative (–) terminal or body ground.

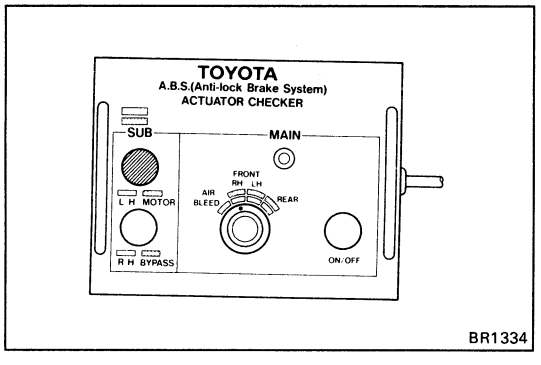

BR1334

4. INSPECT BRAKE ACTUATOR OPERATION

(a) Start the engine, and run it at idle.

(b) Turn the MAIN selector switch of the actuator checker to "FRONT RH" position.

(c) Push and hold in the SUB MOTOR switch for a few seconds.

(d) Depress the brake pedal and hold it until the step (g) is completed.

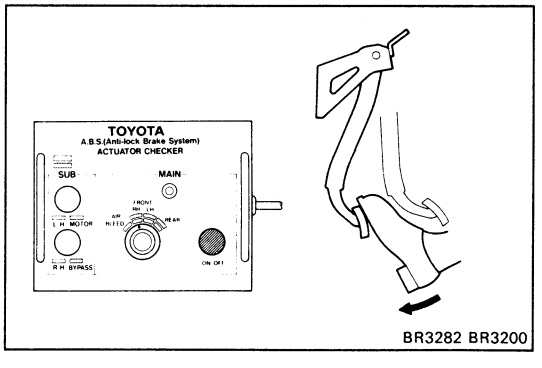

BR3282 BR3200

(e) Push the MAIN push switch and check that the brake pedal does not go down.

NOTICE: Do not keep the MAIN push switch pushing more than 10 seconds.

(f) Release the switch, and check that the pedal go down.

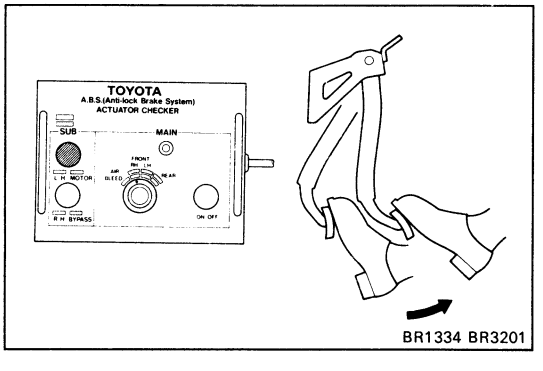

BR1334 BR3201

(g) Push and hold in the SUB MOTOR switch for a few seconds, and check that the pedal returns.

(h) Release the brake pedal.

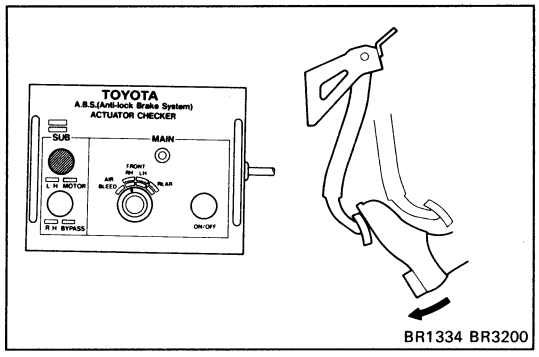

BR1334 BR3200

(i) Push and hold in the SUB MOTOR switch for a few seconds.

(j) Depress the brake pedal and hold it for about 15 seconds. As you hold the pedal down, push the SUB MOTOR switch for a few seconds. Check that the brake pedal does not pulsate.

5. INSPECT FOR OTHER WHEELS

(a) Turn the MAIN selector switch to "FRONT LH" position.

(b) Repeating (c) to (j) of the step 4, check the actuator operation similarly.

(c) Similarly, inspect "REAR" position.

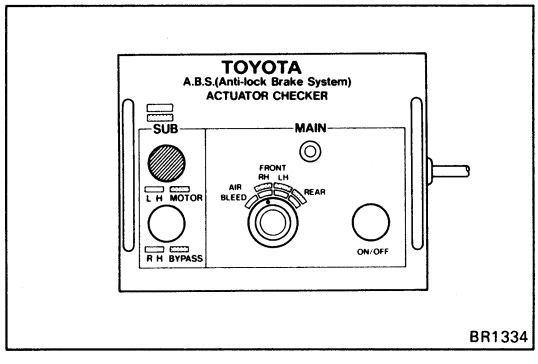

BR1334

6. PUSH SUB MOTOR SWITCH

Push and hold in the SUB MOTOR switch for a few seconds.

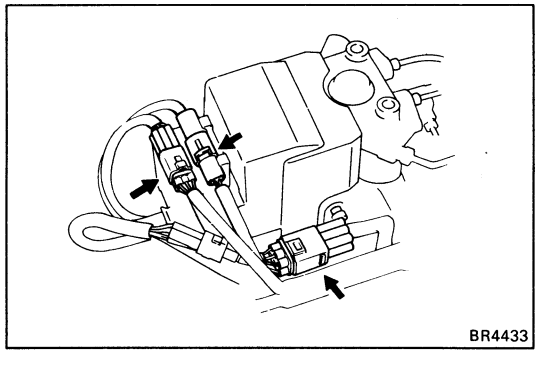
BR4433

7. DISCONNECT ACTUATOR CHECKER (SST) FROM ACTUATOR

(a) Disconnect the actuator (SST) and sub-wire harness (SST) from the actuator.

SST 09990-00150

(b) Connect the actuator connectors.

(c) Clear the diagnostic codes.
(See page BR-54)

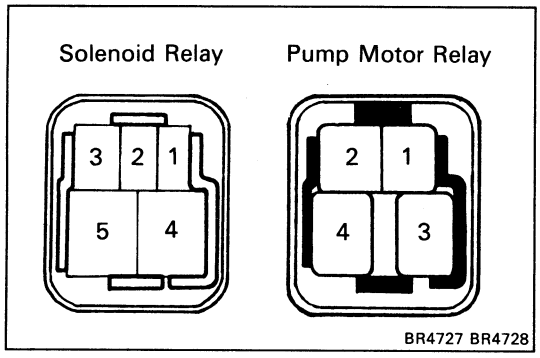

Control Relays

INSPECTION CONTROL RELAYS

1. REMOVE CONTROL RELAYS

Remove the two control relays from the actuator.

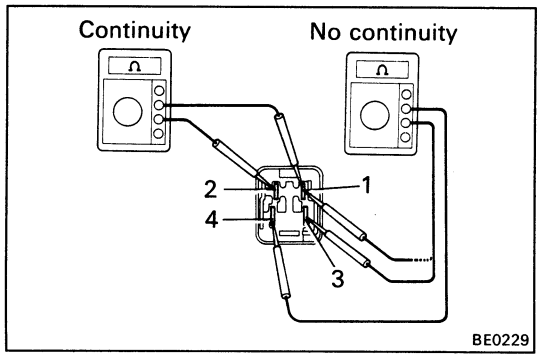

2. INSPECT PUMP MOTOR RELAY CONTINUITY

(a) Check that there is continuity between terminals 1 and 2.

(b) Check that there is no continuity between terminals 3 and 4.

(c) Check that there is no continuity between terminals 1 and 4.

If continuity is not as specified, replace the relay.

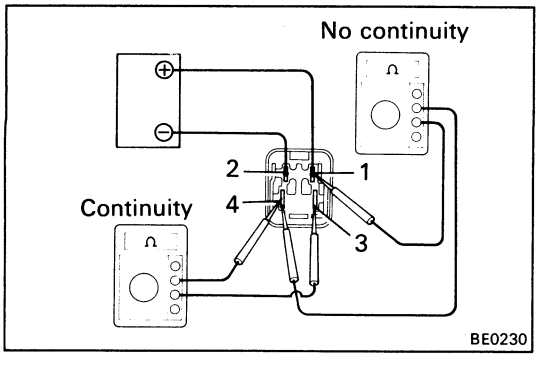

3. INSPECT PUMP MOTOR RELAY OPERATION

(a) Apply battery voltage to terminals 1 and 2.

(b) Check that there is continuity between terminals 3 and 4.

(c) Check that there is no continuity between terminals 1 and 4.

If operation is not as specified, replace the relay.

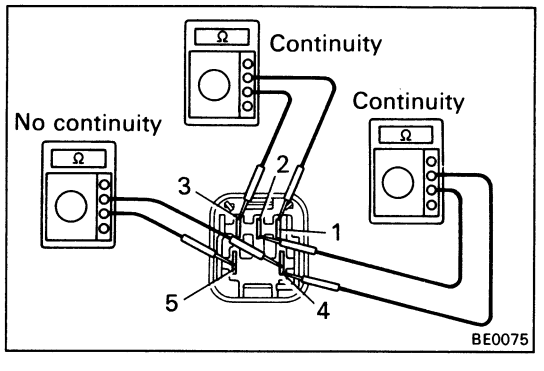

4. INSPECT SOLENOID RELAY CONTINUITY

(a) Check that there is continuity between terminals 1 and 3.

(b) Check that there is continuity between terminals 2 and 4.

(c) Check that there is no continuity between terminals 4 and 5.

If continuity is not as specified, replace the relay.

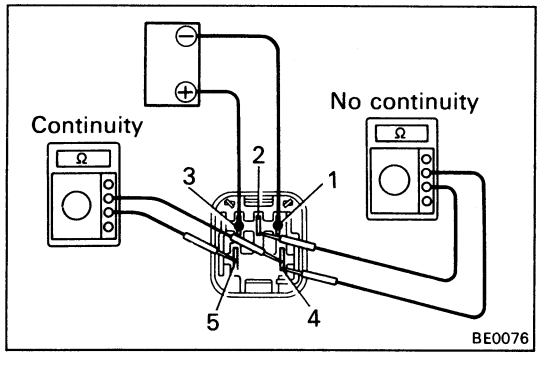

5. INSPECT SOLENOID RELAY OPERATION

(a) Apply battery voltage to terminals 1 and 3.

(b) Check that there is continuity between terminals 4 and 5.

(c) Check that there is no continuity between terminals 2 and 4.

If operation is not as specified, replace the relay.

6. INSTALL TWO CONTROL RELAYS

Front Speed Sensor

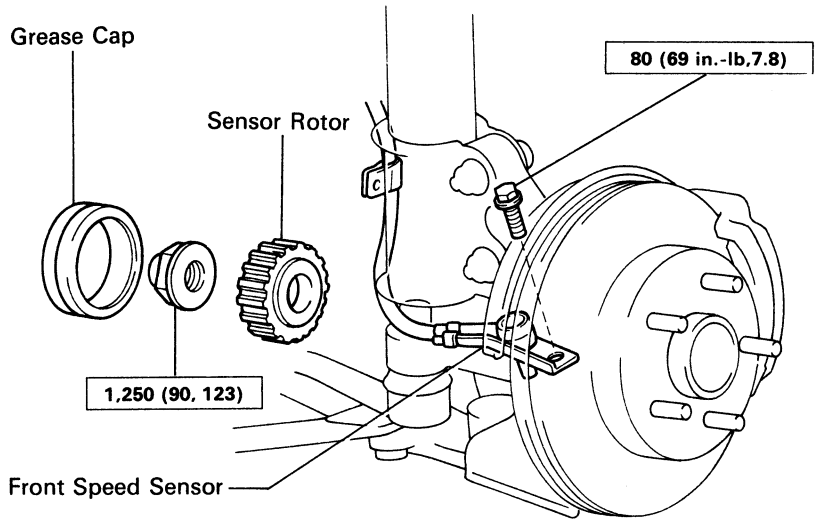

kg-cm(ft-lb, N·m) : Specified torque

BR4579

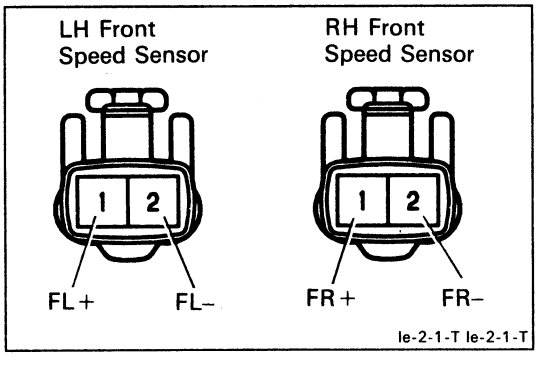

INSPECTION OF FRONT SPEED SENSOR

1. INSPECT SPEED SENSOR

(a) Disconnect the speed sensor connector.

(b) Measure the resistance between terminals.

Resistance: 0.9 – 1.5 kΩ

If resistance value is not as specified, replace the sensor.

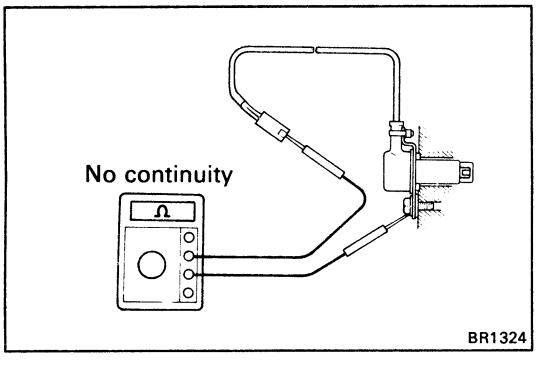

(c) Check that there is no continuity between each terminal and sensor body.

If there is continuity, replace the sensor.

(d) Connect the speed sensor connector.

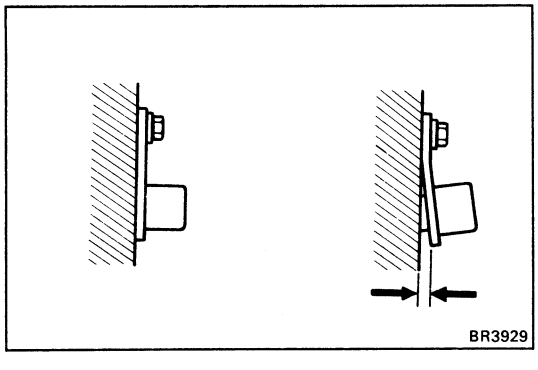

2. INSPECT SENSOR INSTALLATION

(a) Check that the sensor installation bolt is tighten properly. If not, tighten the bolt.

Torque: 80 kg-cm (69 in.-lb, 7.8 N·m)

(b) Check that there is no clearance between the sensor and rear axle carrier as shown.

If there is clearance, replace the sensor.

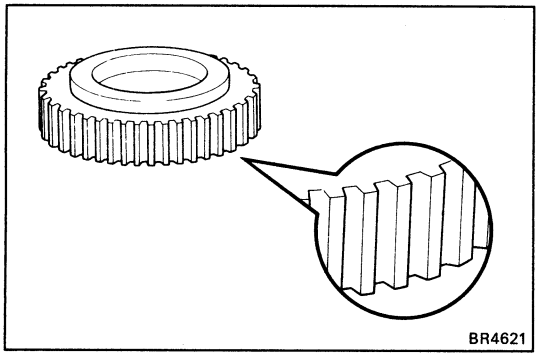
BR4621

3. VISUALLY INSPECT SENSOR ROTOR SERRATIONS

(a) Remove the sensor rotor.
(See page SA-12)

(b) Inspect the sensor rotor serrations for scratches, cracks, warping or missing teeth.

(c) Install the sensor rotor.
(See page SA-14)

NOTICE: To prevent damage to the serrations, do not strike the sensor rotor.

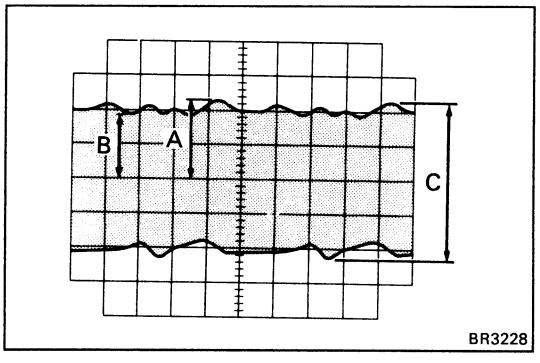

BR3228

INSPECTION OF FRONT SPEED SENSOR AND SENSOR ROTOR SERRATIONS (REFERANCE)

INSPECT FRONT SPEED SENSOR AND SENSOR ROTOR SERRATIONS BY USING OSCILLOSCOPE

(a) Connect an oscilloscope to the speed sensor connector.

(b) Run the vehicle at 20 km/h (12.4 mph), and inspect speed sensor output wave.

(c) Check that C is 0.5 V or more.

If not as specified, replace the speed sensor.

(d) Check that B is 50 % or more of A.

If not as specified, replace the sensor rotor.

Rear Speed Sensor

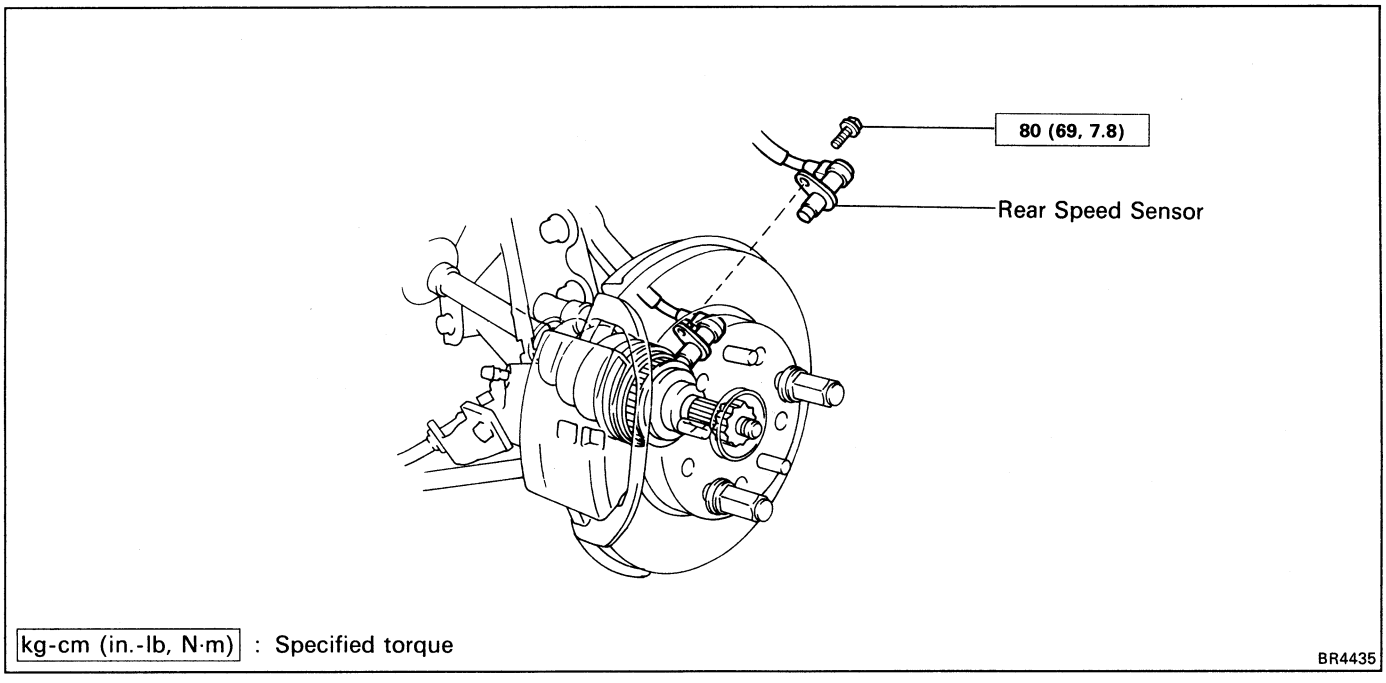

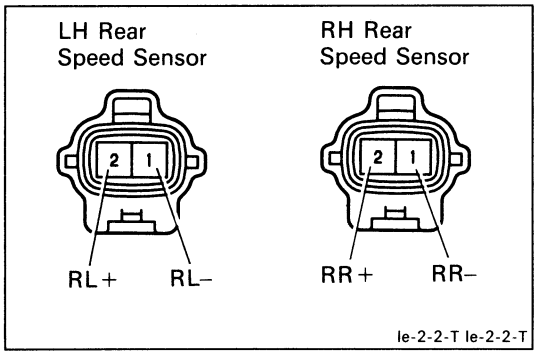

INSPECTION OF REAR SPEED SENSOR

1. INSPECT SPEED SENSOR

(a) Disconnect the speed sensor connector.

(b) Measure the resistance between terminals.

Resistance: 0.9 – 1.5 kΩ

If resistance value is not as specified, replace the sensor.

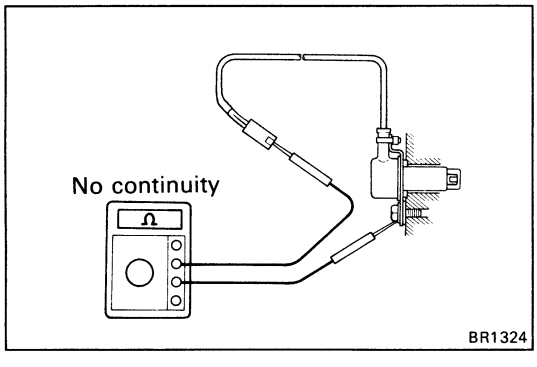

(c) Check that there is no continuity between each terminal and sensor body.

If there is continuity, replace the sensor.

(d) Connect the speed sensor connector.

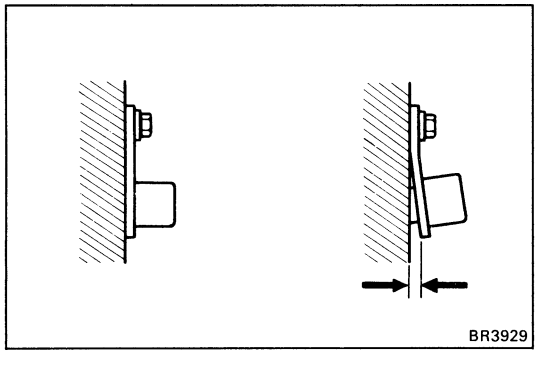

2. INSPECT SENSOR INSTALLATION

(a) Check that the sensor installation bolt is tightened properly. If not, tighten the bolt.

Torque: 80 kg-cm (69 in.-lb, 7.8 N·m)

(b) Check that there is no clearance between the sensor and rear axle carrier as shown.

If there is clearance, replace the sensor.

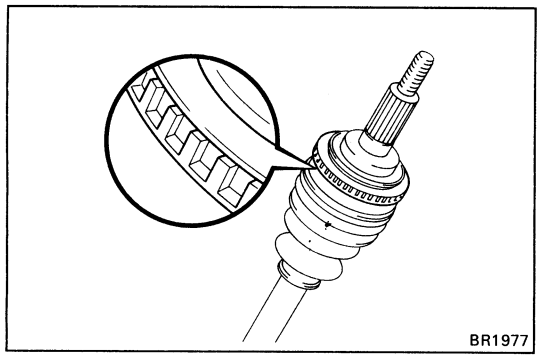
BR1977

3. VISUALLY INSPECT SENSOR ROTOR SERRATIONS

(a) Remove the drive shaft.
(See page SA-39 or 52)

(b) Inspect the sensor rotor serrations for scratches, cracks, warping or missing teeth.

(c) Install the drive shaft.
(See page SA-49 or 66)

NOTICE: To prevent damage to the serrations, do not strike the drive shaft.

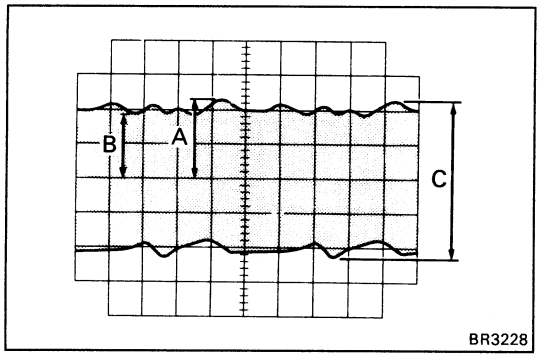

BR3228

INSPECTION OF REAR SPEED SENSOR AND SENSOR ROTOR SERRATIONS (REFERANCE)

INSPECT REAR SPEED SENSOR AND SENSOR ROTOR SERRATIONS BY USING AN OSCILLOSCOPE

(a) Connect an oscilloscope to the speed sensor connector.

(b) Run the vehicle at 20 km/h (12.4 mph), and inspect speed sensor output wave.

(c) Check that C is 0.5 V or more.

If not as specified, replace the speed sensor.

(d) Check that B is 50 % or more of A.

If not as specified, replace the rear axle hub.

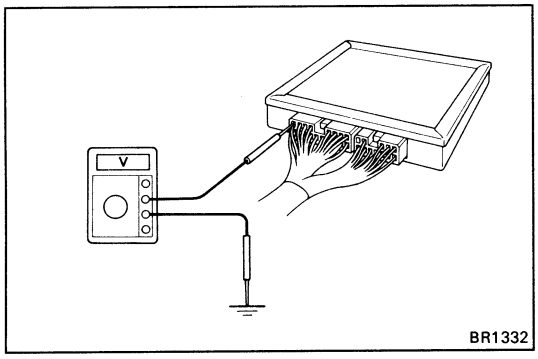

Anti-Lock Brake System Circuit

INSPECTION OF SYSTEM CIRCUIT

1. INSPECT SYSTEM CIRCUIT WITH CONNECTOR CONNECTED

(a) Remove the ABS ECU.

(b) Using a voltmeter with high impedance (10 K ohm/V minimum), measure the voltage at each terminal and body ground.

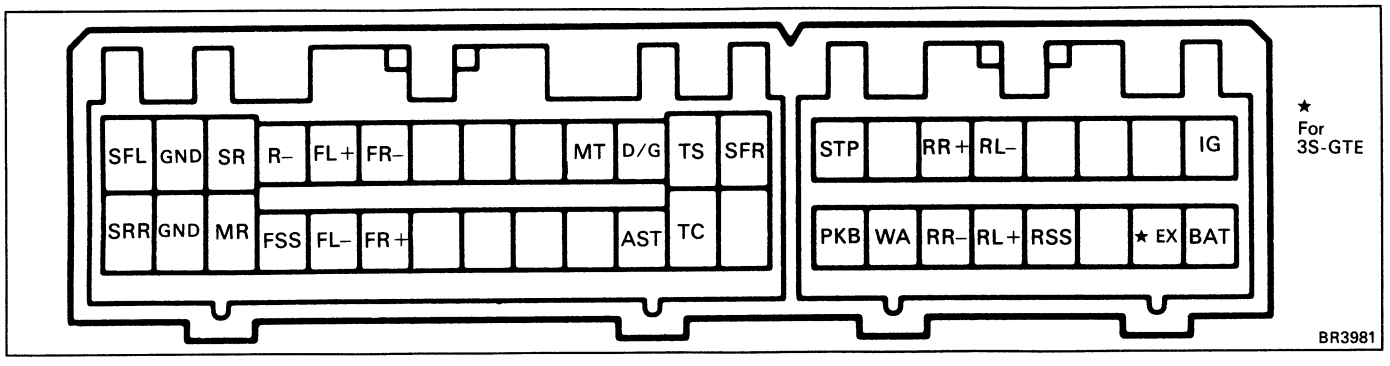

Tester Connection	Check Item	Condition	Specified Value	Trouble Part
IG	Voltage	IG switch on	Battery voltage	ECU-IG Fuse
RL–	Continuity	IG switch off	Continuity	ABS ECU
STP	Voltage	IG switch off and brake pedal depressed	Battery voltage	Stop light switch Stop light
	Continuity	IG switch off and brake pedal returned	Continuity	
BAT	Voltage	IG switch off	Battery voltage	ECU +B Fuse
EX	Voltage	IG switch on	Battery voltage	ABS ECU. EFI ECU
RSS	Continuity	IG switch off	Continuity	ABS ECU
RR–	Continuity	IG switch off	Continuity	ABS ECU
WA	Voltage	IG switch on and "ABS" warning light goes on	About 0V	ABS ECU "ABS" warning light
		IG switch on and "ABS" warning light goes off	Battery voltage	
PKB	Voltage	IG switch on and PKB lever pulled	About 0V	Parking brake switch Level warning switch
		Engine running on and PKB lever returned	Battery voltage	
SFR	Voltage	IG switch on and "ABS"warning light goes on	About 0V	Actuator
		IG switch on and "ABS" warning light goes off	Battery voltage	
TS	Voltage	IG switch on and check connector Ts-E_1 not connected	Battery voltage	ABS ECU
		IG switch on and check connector Ts-E_1 connector	About 0V	
FR–	Continuity	IG switch off	Continuity	
R–	Continuity	IG switch off	Continuity	ABS ECU
SR	Voltage	IG switch on and "ABS" warning light goes on	About 0V	
		IG switch on and "ABS" warning light goes off	Battery voltage	
GND	Continuity	IG switch off	Continuity	Wiring harness
SFL	Voltage	IG switch on and "ABS" warning light goes on	About 0V	Actuator
		IG switch on and "ABS" warning light goes off	Battery voltage	

Continued on page BR-75

Continued from page BR-74

Tester Connection	Check Item	Condition	Specified Value	Trouble Part
TC	Voltage	IG switch on and check connector Tc-E_1 not connected	Battery voltage	ABS ECU
		IG switch on and check connector Tc-E_1 connected	About 0V	
AST	Voltage	IG switch on and "ABS" warning light goes on	About 0V	Actuator
		IG switch on and "ABS" warning light goes off	Battery voltage	
FL–	Continuity	IG switch off	Continuity	ABS ECU
FSS	Continuity	IG switch off	Continuity	
SRR	Voltage	IG switch on and "ABS" warning light goes on	About 0V	Actuator
		IG switch on and "ABS" warning light goes off	Battery voltage	

If the circuit is not as specified, check and repair or replace the trouble part shown in the table above.

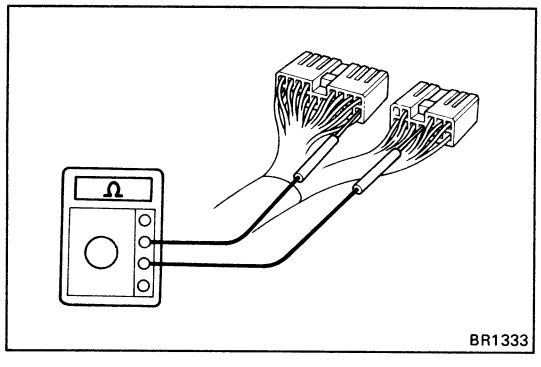

2. INSPECT SYSTEM CIRCUIT WITH CONNECTOR DISCONNECTED

(a) Disconnect the connectors from the ECU, inspect at the wire harness side connector.

Tester Connection	Check Item	Specified Value	Trouble Part	Tester Connection	Check Item	Specified Value	Trouble Part
RR+ ↔ RR–	Resistance	0.9 ~ 1.5 kΩ	Rear RH speed sensor	SFL ↔ AST	Resistance	About 6 Ω	Actuator
RL+ ↔ RL–	Resistance	0.9 ~ 1.5 kΩ	Rear LH speed sensor	AST ↔ Body ground	Resistance	About 5 Ω	Actuator
SFR ↔ AST	Resistance	About 6 Ω	Actuator	FR+ ↔ FR–	Resistance	0.8 ~ 1.5 Ω	Front RH speed sensor
MT ↔ Body ground	Resistance	About 5 Ω	Actuator	MR ↔ R–	Resistance	50 ~ 80 Ω	Control relay
FL+ ↔ FL–	Resistance	0.8 ~ 1.5 kΩ	Front LH speed sensor	SRR ↔ AST	Resistance	About 6 Ω	Actuator
SR ↔ R–	Resistance	60 ~ 100 Ω	Control relay				

If the circuit is not as specified, check and repair or replace the trouble part shown in the table above.

(b) Connect the connectors, and install the ECU in place.

STEERING

	Page
PRECAUTIONS	SR-2
TROUBLESHOOTING	SR-2
ON-VEHICLE INSPECTION	SR-3
STEERING COLUMN	SR-4
MANUAL STEERING GEAR HOUSING	SR-15
POWER STEERING	
Description	SR-27
On-Vehicle Inspection	SR-30
Power Steering Pump	SR-33
Gear Housing	SR-35
Electronic Control System	SR-53
Diagnosis System	SR-55
Inspection of Electronic Control Components	SR-58

PRECAUTIONS

- **Care must be taken to replace parts properly because they could affect the performance of the steering system and result in a driving hazard.**
- **(USA)**
  The steering wheel pad has an airbag built in, so take all due precautions when handling it. For more details, see the SRS AIRBAG section.

TROUBLESHOOTING

Problem	Possible cause	Remedy	Page
Hard steering	Tires improperly inflated	Inflate tires to proper pressure	SA-3
	Insufficient lubricant	Lubricate suspension and steering linkage	
	Excessive caster	Check front wheel alignment	SA-4
	Steering system joint worn	Replace steering system joints	SR-15, 35
	Lower arm ball joints worn	Replace lower arm ball joints	SA-24
	Steering column binding	Inspect steering column	SR-4
	Steering gear out of adjustment or broken	Adjust or repair steering gear	SR-15, 35
	Fluid level in reservoir low	Check reservoir	SR-30
	Power steering unit faulty	Check power steering unit	SR-30
Poor return	Tires improperly inflated	Inflate tires to proper pressure	SA-3
	Insufficient lubricant	Lubricate suspension and steering linkage	
	Wheel alignment incorrect	Check front wheel alignment	SA-4
	Steering column binding	Inspect steering column	SR-4
	Steering gear out of adjustment or broken	Adjust or repair steering gear	SR-15, 35
Excessive play	Front wheel bearing worn	Replace front wheel bearing	SA-9
	Main shaft yoke or intermediate shaft yoke worn	Replace main shaft or intermediate shaft	SR-4
	Lower arm ball joints worn	Replace lower arm ball joints	SA-24
	Steering system joints worn	Replace steering system joint	SR-15, 35
	Steering gear out of adjustment or broken	Adjust or repair steering gear	SR-15, 35
Abnormal noise	Steering linkage loose	Tighten steering linkage	
	Steering system joints worn	Replace steering system joints	SR-15, 35
	Steering gear out of adjustment or broken	Adjust or repair steering gear	SR-15, 35

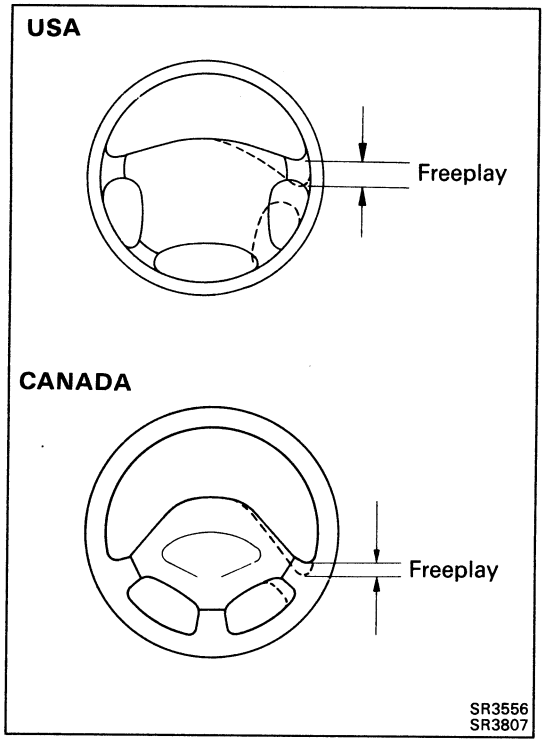

ON-VEHICLE INSPECTION

CHECK THAT STEERING WHEEL FREEPLAY IS CORRECT

With the vehicle stopped and tires pointed straight ahead, rock the steering wheel gently back and forth with light finger pressure.

Freeplay should not exceed the maximum.

Maximum freeplay: 30 mm (1.18 in.)

If incorrect, repair.

STEERING COLUMN

REMOVAL AND INSTALLATION OF STEERING COLUMN

Remove and install the parts as shown.

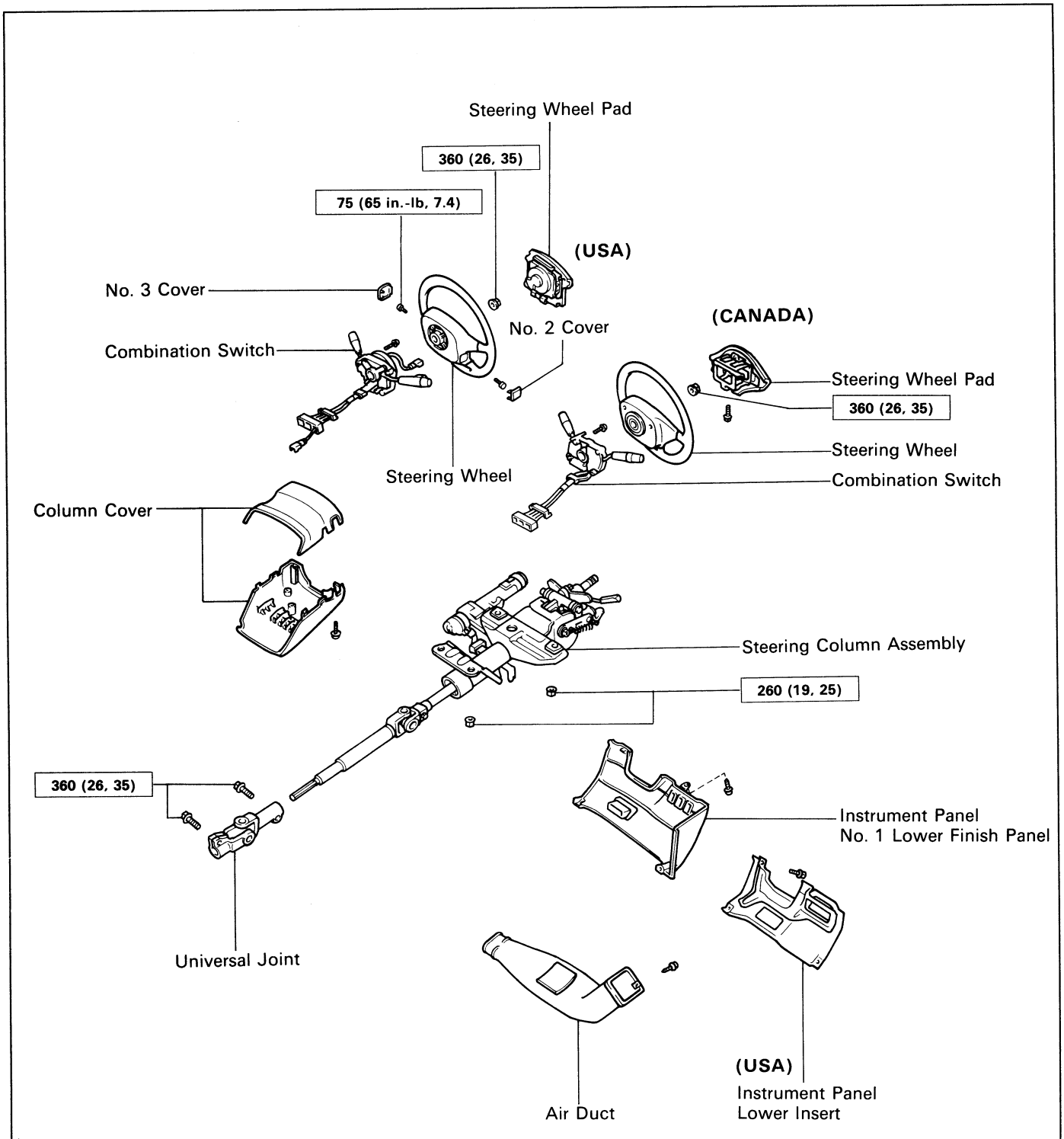

kg-cm (ft-lb N·m) : Specified torque

SR3856

(MAIN POINTS OF REMOVAL AND INSTALLATION)

(USA)

CAUTION: Work must be started after approx. 20 seconds or longer from the time the ignition switch is turned to the LOCK position and the negative (–) terminal cable is disconnected from the battery (See page AB-2).

NOTICE: If the wiring connector of the airbag system is disconnected with the ignition switch at ON or ACC, diagnostic codes will be recorded.

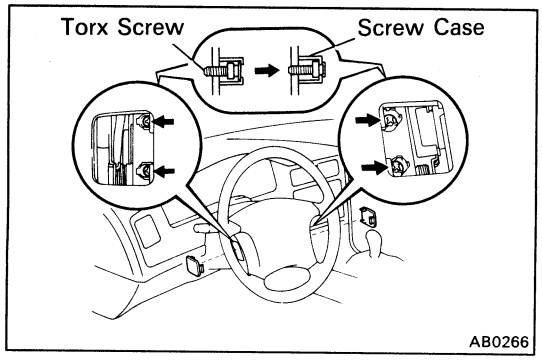

1. REMOVE STEERING WHEEL PAD

(a) Remove negative terminal (–) from the battery.

(b) Place the front wheels facing straight ahead.

(c) Using a torx wrench, loosen the four screws.

Torx wrench: T30 (Part No. 09042-00010 or locally manufactured tool)

(d) Loosen the torx screws until the groove along the screw circumference catches on the screw case.

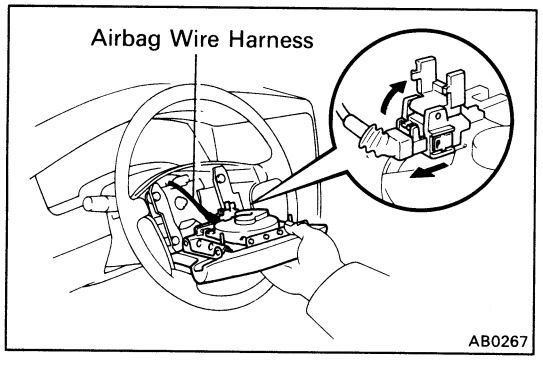

(e) Pull the wheel pad out from the steering wheel and disconnect the airbag connector.

NOTICE: When removing the wheel pad, take care not to pull the airbag wire harness.

CAUTION: When storing the wheel pad, keep the upper surface of the pad facing upward.

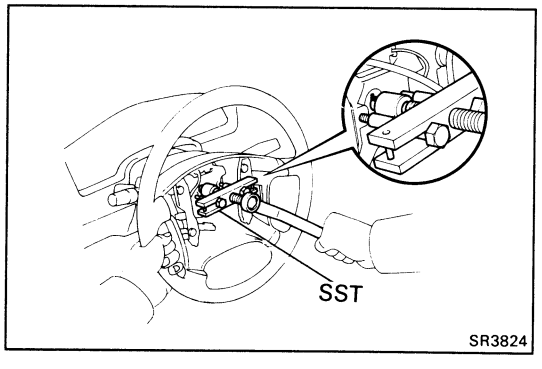

2. REMOVE STEERING WHEEL

(a) Disconnect the connector.

(b) Remove the set nut.

(c) Using SST, remove the steering wheel.

SST 09213-31021

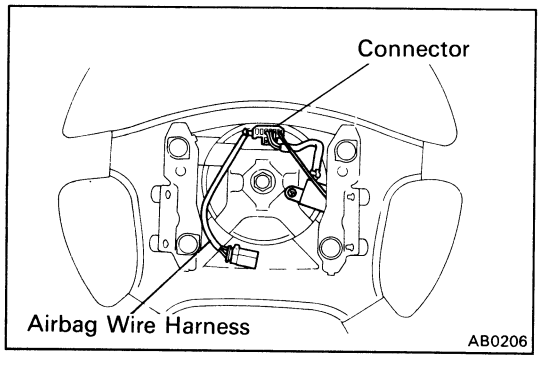

3. INSTALL STEERING WHEEL AND WHEEL PAD

(a) Check that the front wheels are facing straight ahead.

(b) Center the spiral cable.
(See page AB-16)

(c) Install the steering wheel and torque the set nut.

Torque: 360 kg-cm (26 ft-lb, 35 N·m)

(d) Connect the connector.

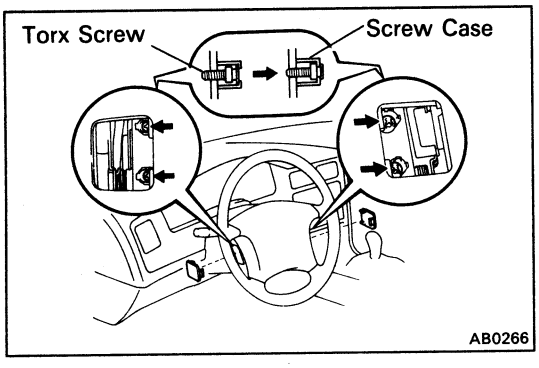

(e) Install the wheel pad after confirming that the circumference groove of the torx screws is caught on the screw case.

(f) Using a torx wrench, tighten the four screws.

Torque: 75 kg-cm (65 in.-lb, 7.4 N·m)

NOTICE:

- **Make sure the wheel pad is installed to the specified torque.**
- **If the wheel pad has been dropped, or there are cracks, dents or other defects in the case or connector, replace the wheel pad with a new one.**
- **When installing the wheel pad, take care that the wirings do not interfere with other parts and are not pinched between other parts.**

4. CHECK STEERING WHEEL CENTER POINT AFTER INSTALLING STEERING COLUMN

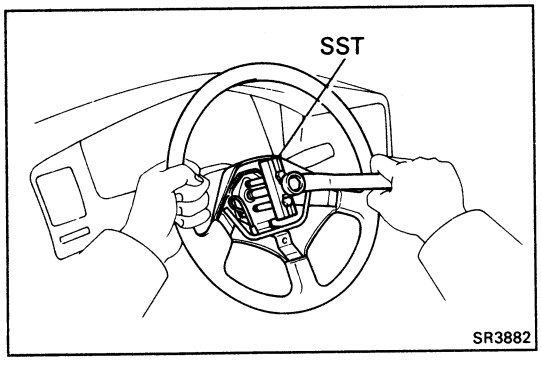

(CANADA)

1. REMOVE STEERING WHEEL

(a) Remove a screw and the steering wheel pad.

(b) Remove the steering wheel nut.

(c) Using SST, remove the steering wheel.

SST 09609-20011

2. CHECK STEERING WHEEL CENTER POINT AFTER INSTALLING STEERING COLUMN

COMPONENTS

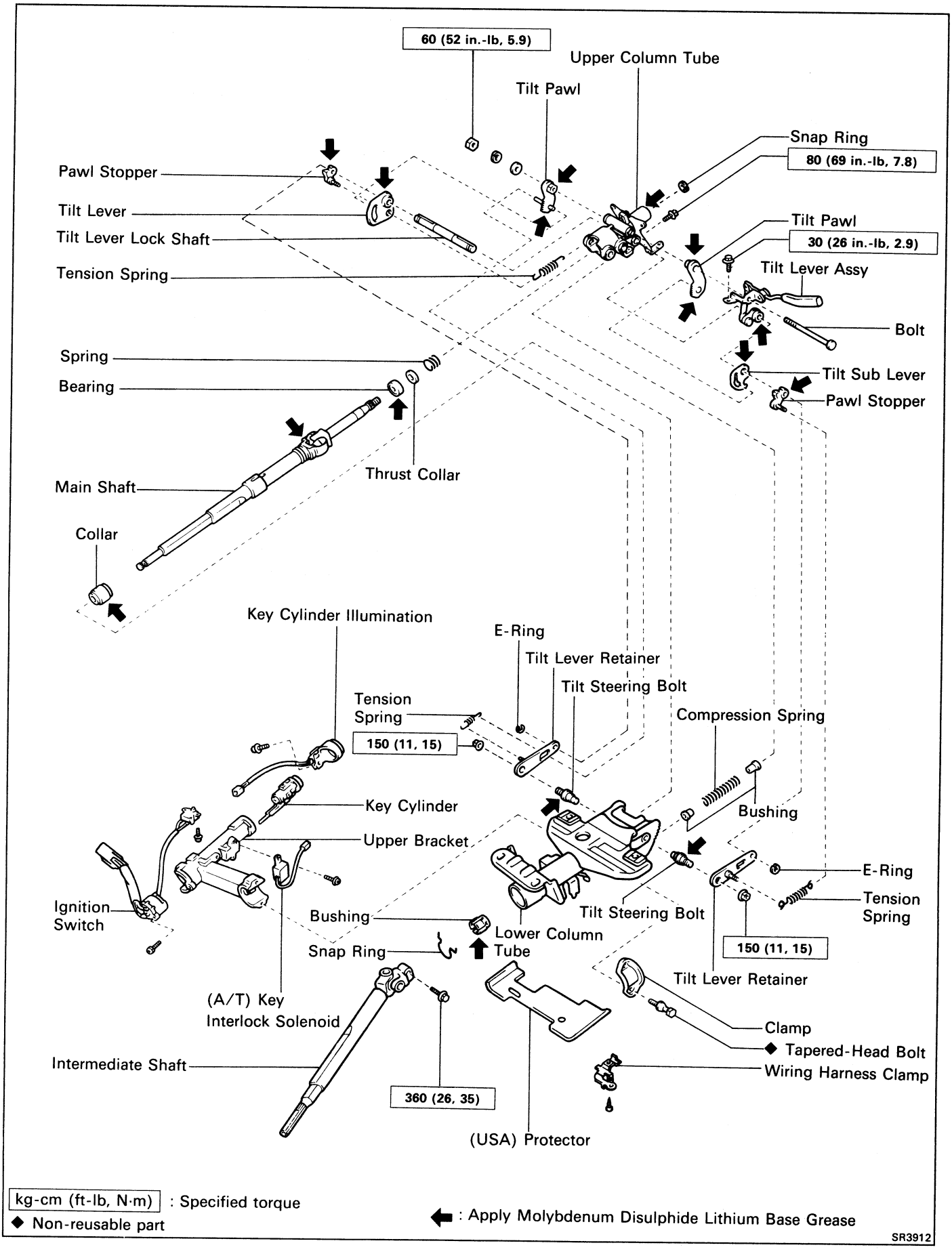

kg-cm (ft-lb, N·m) : Specified torque

◆ Non-reusable part

⬅ : Apply Molybdenum Disulphide Lithium Base Grease

SR3912

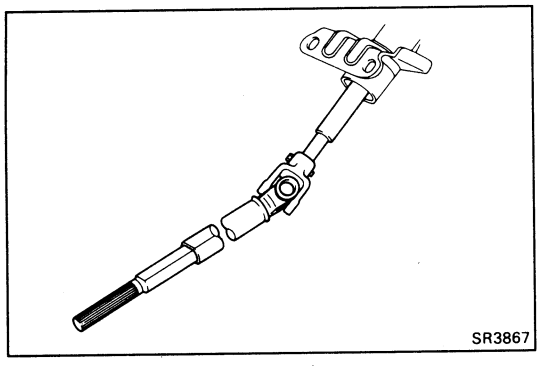
SR3867

DISASSEMBLY OF STEERING COLUMN

1. **REMOVE IGNITION KEY CYLINDER ILLUMINATION**
2. **REMOVE INTERMEDIATE SHAFT**
3. **REMOVE WIRING HARNESS CLAMP**
4. **(USA)**
   REMOVE PROTECTOR

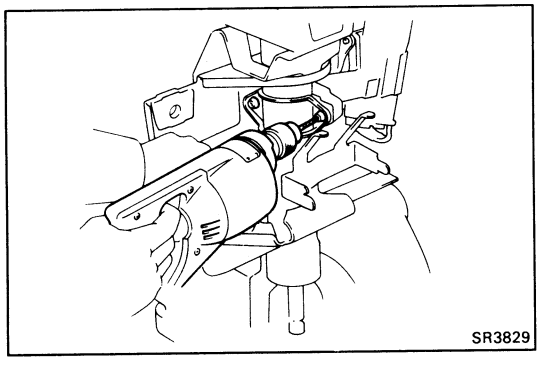
SR3829

5. **REMOVE UPPER BRACKET**
   (a) Using a centering punch, mark the center of the tapered-head bolts.
   (b) Using a 3 – 4 mm (0.12 – 0.16 in.) drill, drill into the tapered-head bolts.

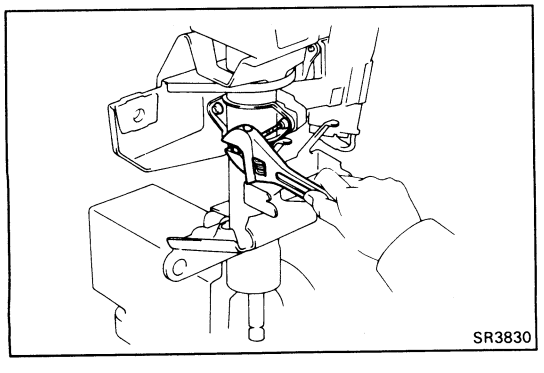
SR3830

   (c) Using a screw extractor, remove the tapered-head bolts.
   (d) Remove the two bolts, and separate the upper bracket and the column tube.

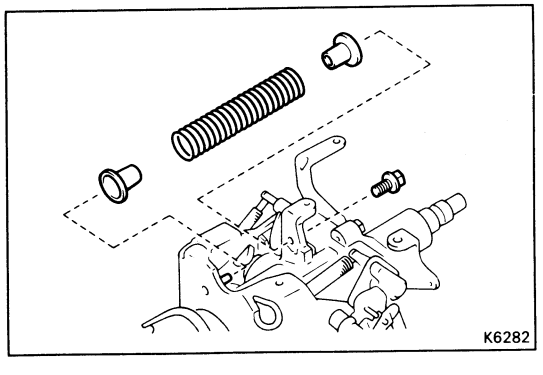
K6282

6. **REMOVE COMPRESSION SPRING**
   (a) Remove the bolt and spring.
   (b) Remove the two bushings from the spring.

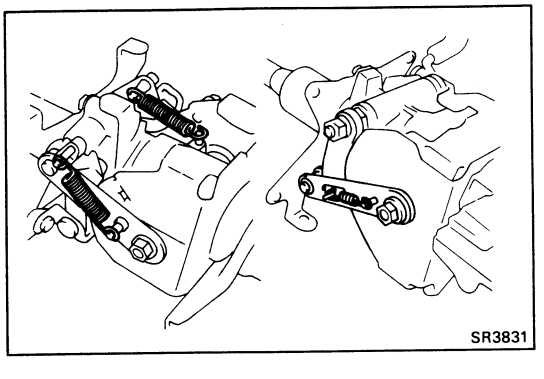
SR3831

7. **REMOVE THREE TENSION SPRINGS**

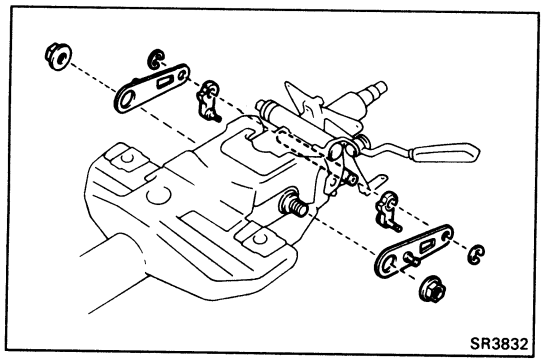

8. REMOVE TILT LEVER RETAINERS AND PAWL STOPPERS

(a) Remove the two E-rings from the tilt lever lock shaft.

(b) Remove the two nuts from the tilt steering bolts.

(c) Remove the two tilt lever retainers and two pawl stoppers.

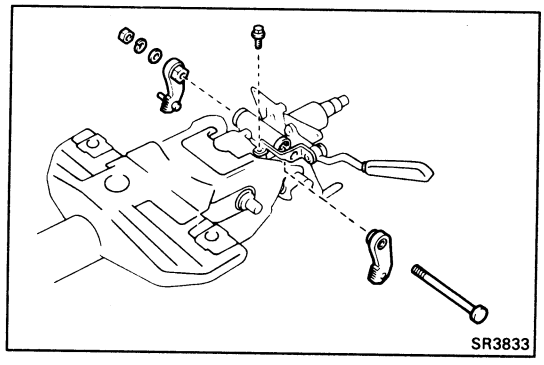

9. REMOVE TILT PAWLS

(a) Remove the nut and two washers.

(b) Pull out the bolt.

(c) Remove the tilt lever assembly installation bolt.

(d) Remove the two tilt pawls.

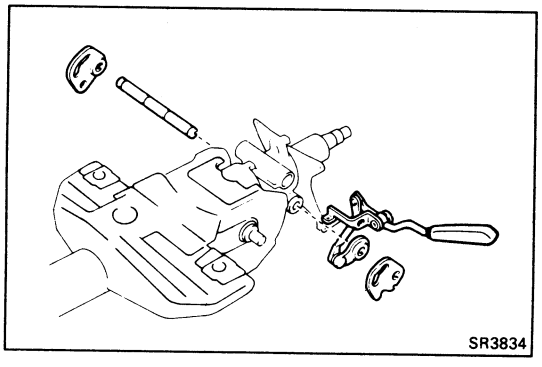

10. REMOVE TILT LEVER, TILT SUB LEVER, TILT LEVER ASSEMBLY AND TILT LEVER LOCK SHAFT

(a) Remove the tilt lever, tilt sub lever and tilt lever assembly from the tilt lever lock shaft.

(b) Pull out the tilt lever lock shaft.

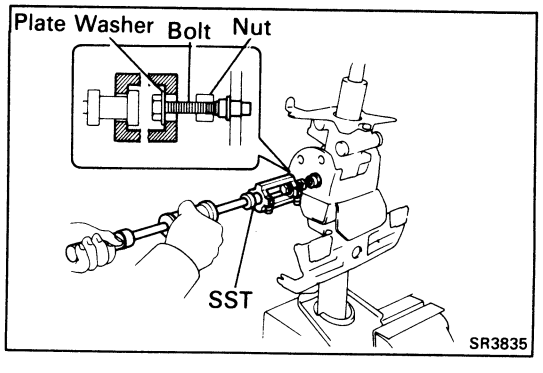

11. REMOVE UPPER COLUMN TUBE

(a) Set SST, the nut (10 mm diameter, 1.25 mm pitch), plate washer (36 mm outer diameter) and bolt (10 mm diameter, 1.25 mm pitch, 50 mm length) as shown.
And then remove the two tilt steering bolts.

SST 09910-00015 (09911-00011, 09912-00010)

(Reference)	Nut	90170-10004
	Plate washer	90201-10201
	Bolt	91111-51050

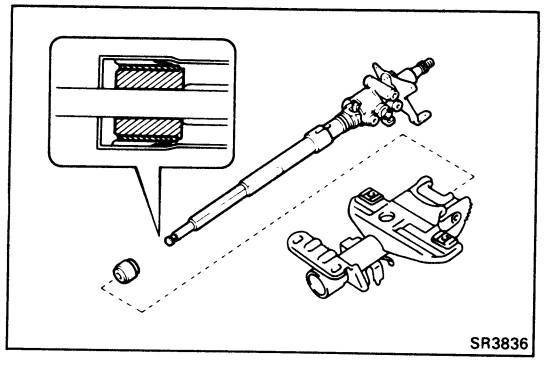

(b) Remove the upper column tube from the lower column tube.

(c) Remove the collar from the main shaft.

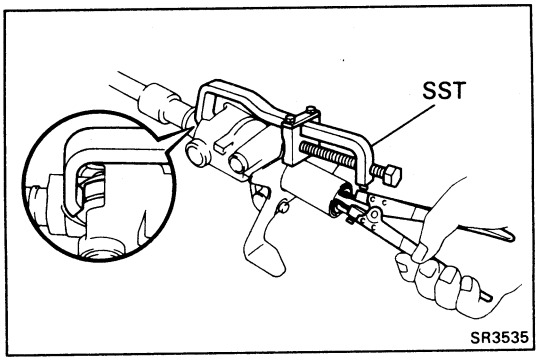

12. REMOVE MAIN SHAFT

(a) Using SST to compress the main shaft spring, remove the snap ring with snap ring pliers.

SST 09950-20017

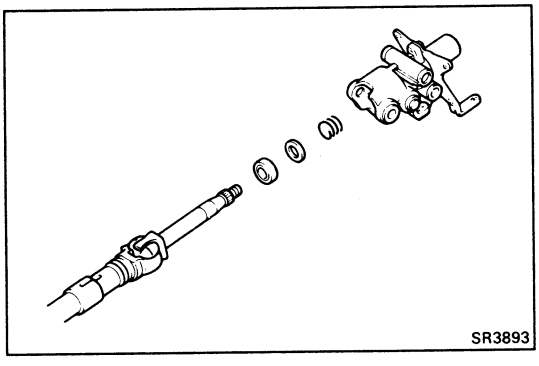

(b) Remove the main shaft from the column tube.

(c) Remove the spring, thrust collar and bearing.

INSPECTION AND REPLACEMENT OF STEERING COLUMN

1. INSPECT KEY CYLINDER

Check that the steering lock mechanism operates properly.

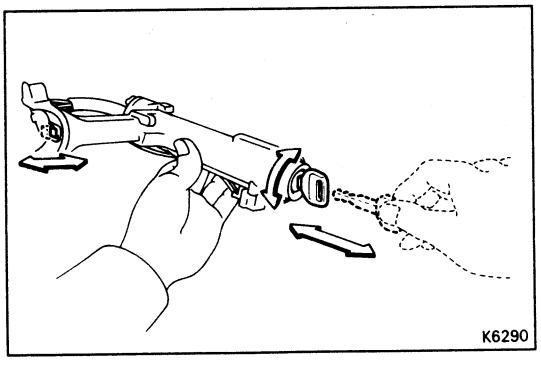

2. IF NECESSARY, REPLACE KEY CYLINDER

(a) Place the ignition key at the ACC position.

(b) Push down the stop pin with a thin rod, and pull out the key cylinder.

(c) Make sure the ignition key is at the ACC position.

(d) Install a new key cylinder.

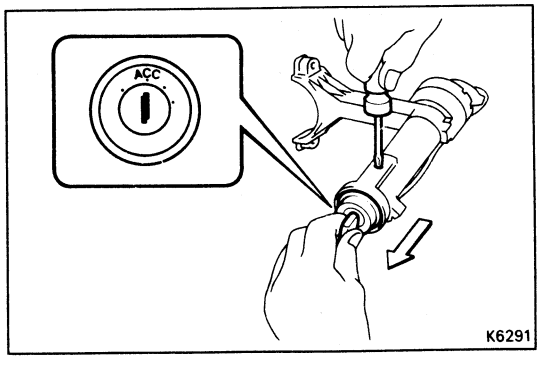

3. IF NECESSARY, REPLACE MAIN SHAFT BUSHING

(a) Remove the snap ring.

(b) Using a screwdriver, remove the bushing.

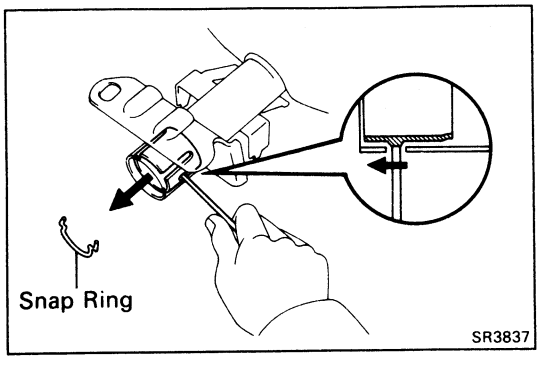

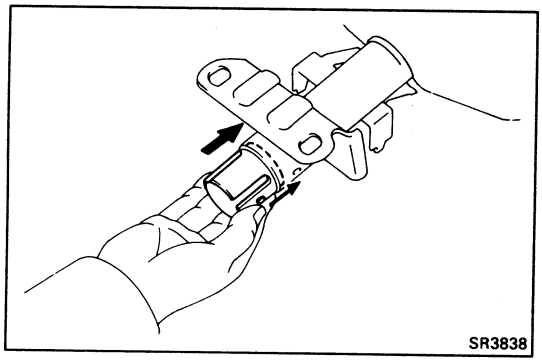

(c) Align the holes of the tube and projections of a new bushing, and insert the bushing in the column tube.

(d) Install the snap ring.

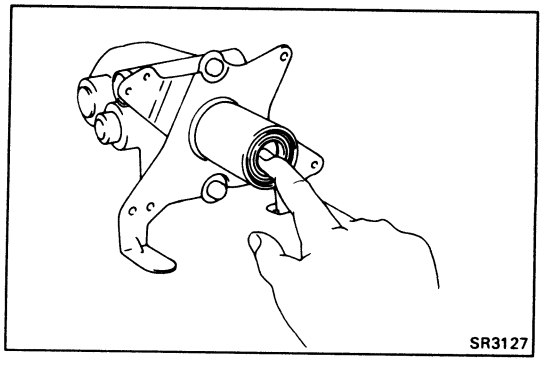

4. INSPECT UPPER BEARING

Check the upper bearing rotation condition and check for abnormal noise.

5. (A/T)
INSPECT KEY INTERLOCK SOLENOID
(See page AT-165)

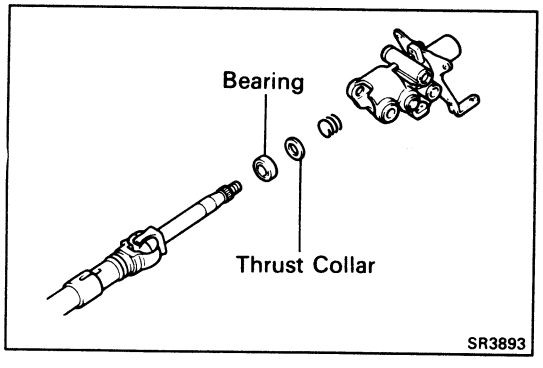

ASSEMBLY OF STEERING COLUMN

(See page SR-7)

1. APPLY MOLYBDENUM DISULPHIDE LITHIUM BASE GREASE (See page SR-7)

2. INSTALL MAIN SHAFT

(a) Install the bearing, thrust collar and spring to the main shaft.

(b) Insert the main shaft into the upper column tube.

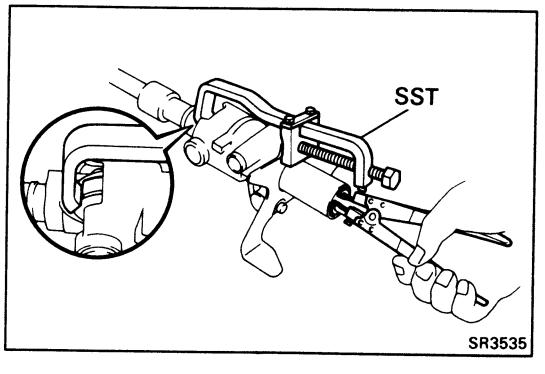

(c) Using SST to compress the main shaft spring, install the snap ring with snap ring pliers.

SST 09950-20017

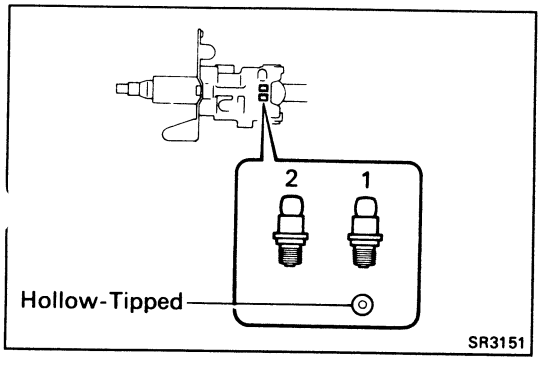

3. SELECT TILT STEERING BOLTS

Select the bolt with the plain thread end when the upper column tube mark is 2, and the bolt with the hollow-tipped thread end when the mark is 1.

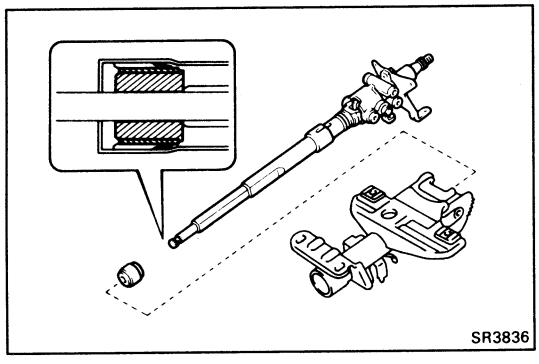

4. INSTALL MAIN SHAFT WITH UPPER COLUMN TUBE

(a) Install the collar to the main shaft.

(b) Insert the main shaft with the upper column tube into the lower column tube.

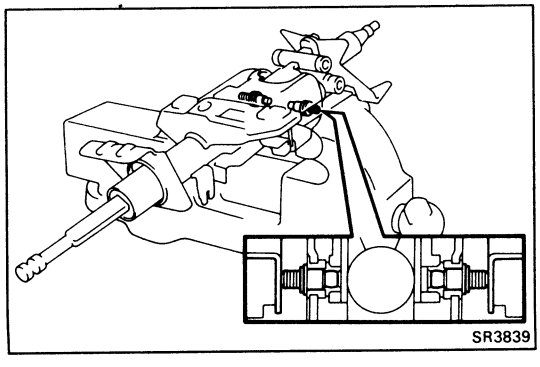

(c) Using a vise, press in the two tilt steering bolts.

HINT: Make sure the upper tube turns smoothly.

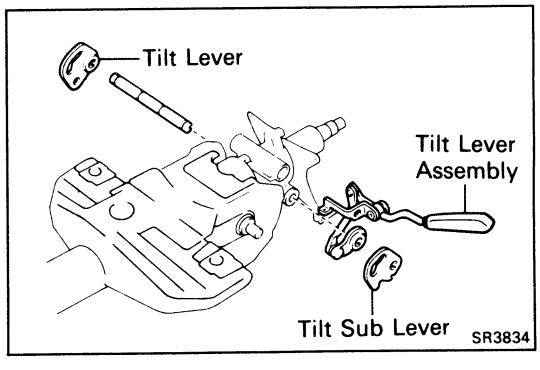

5. INSTALL TILT LEVER LOCK SHAFT, TILT LEVER ASSEMBLY, TILT SUB LEVER AND TILT LEVER

(a) Insert the tilt lever lock shaft into the upper column tube.

(b) Install the tilt lever assembly.

(c) Install the tilt lever and tilt sub lever.

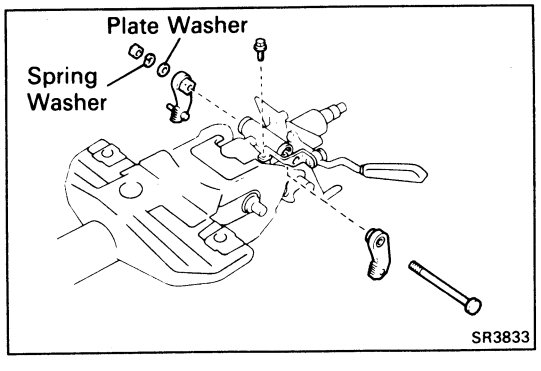

6. INSTALL TILT PAWLS

(a) Install the two tilt pawls to the upper column tube.

HINT: Insert the pawl pin into the long hole of the tilt lever and tilt sub lever.

(b) Install the bolt through the tilt pawls and tilt lever assembly.

(c) Temporarily install the two washers and nut.

(d) Install and torque the tilt lever assembly installation bolt.

Torque: 30 kg-cm (26 in.-lb, 2.9 N·m)

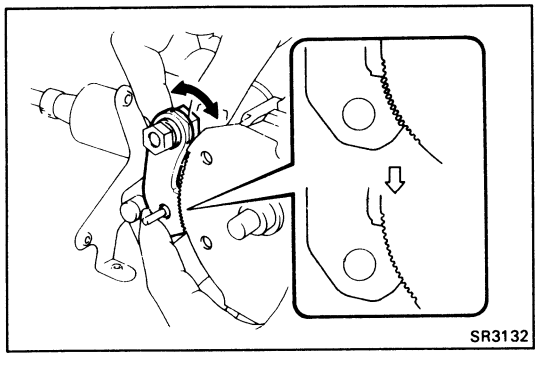

7. ENGAGE AND ADJUST TILT PAWL

(a) Engage the tilt sub lever side pawl to the center of the ratchet.

(b) While turning the tilt lever side collar, completely engage the tilt lever side pawl to the ratchet.

(c) Tighten the nut.

Torque: 60 kg-cm (52 in.-lb, 5.9 N·m)

(d) Check that the pawls rotate smoothly.

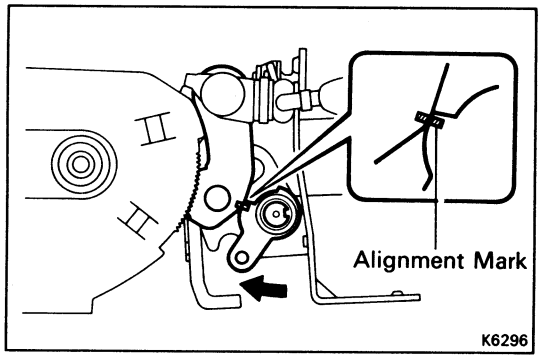

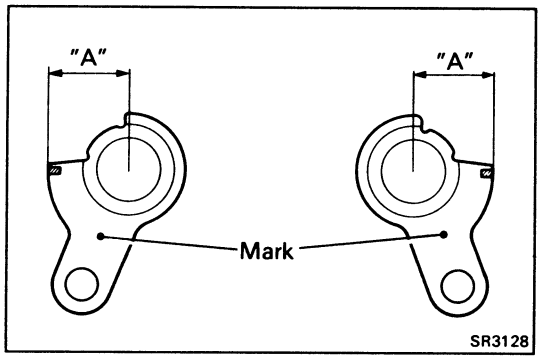

8. SELECT PAWL STOPPERS

(a) With the tilt pawl and ratchet engaged, install two pawl stoppers.

(b) Check that the alignment marks on the stopper and pawl align when the stopper is rotated to the pawl side.

(c) If the alignment marks do not align, select pawl stoppers according to the following table.

Tilt lever side	Tilt sub lever side	Dimension "A" mm (in.)
1	A	12.65 – 12.75 (0.4980 – 0.5020)
2	B	12.55 – 12.65 (0.4941 – 0.4980)
3	C	12.45 – 12.55 (0.4902 – 0.4941)
4	D	12.35 – 12.45 (0.4862 – 0.4902)
5	E	12.25 – 12.35 (0.4823 – 0.4862)

(d) After selecting the stoppers, check that on both sides the pawl and ratchet are fully engaged.

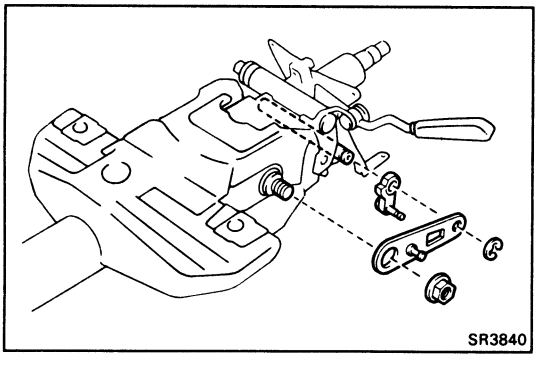

9. INSTALL PAWL STOPPERS AND TILT LEVER RETAINERS

(a) Install the tilt sub lever side pawl stopper and tilt lever retainer.

(b) Install the E-ring.

(c) Install and torque the nut.

Torque: 150 kg-cm (11 ft-lb, 15 N·m)

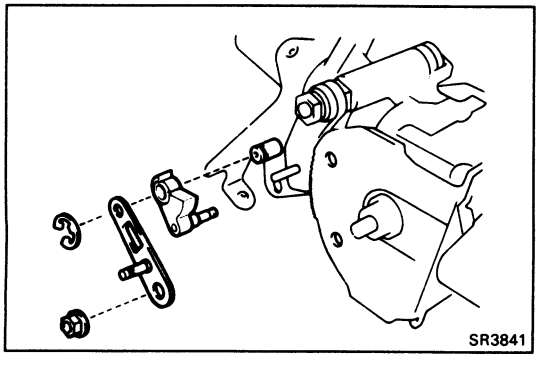

(d) Install the tilt lever side pawl stopper and tilt lever retainer.

(e) Install the E-ring.

(f) Install and torque the nut.

Torque: 150 kg-cm (11 ft-lb, 15 N·m)

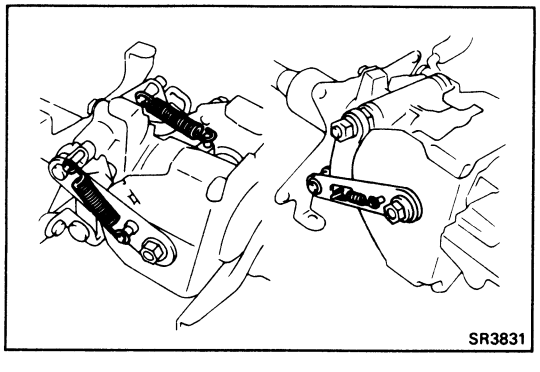

10. INSTALL THREE TENSION SPRINGS

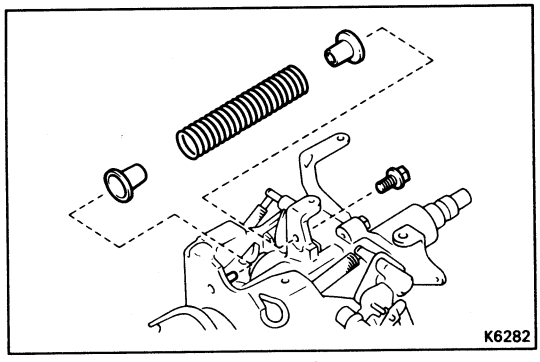

11. INSTALL COMPRESSION SPRING

(a) Install the two bushings to the spring.

(b) Install the spring and bolt.

(c) Torque the bolt.

Torque: 80 kg-cm (69 in.-lb, 7.8 N·m)

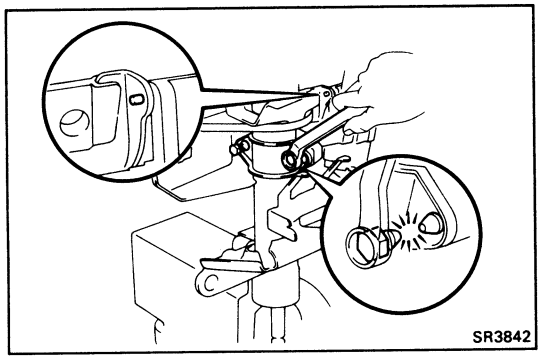

12. INSTALL UPPER BRACKET

(a) Install the upper bracket with new tapered-head bolts.

HINT: Insert the upper bracket pin into the column tube hole.

(b) Tighten the tapered-head bolts until the bolt heads brake off.

13. (USA)
INSTALL PROTECTOR

14. INSTALL WIRING HARNESS CLAMP

15. INSTALL INTERMEDIATE SHAFT

Torque: 360 kg-cm (26 ft-lb, 35 N·m)

16. INSTALL IGNITION KEY CYLINDER ILLUMINATION

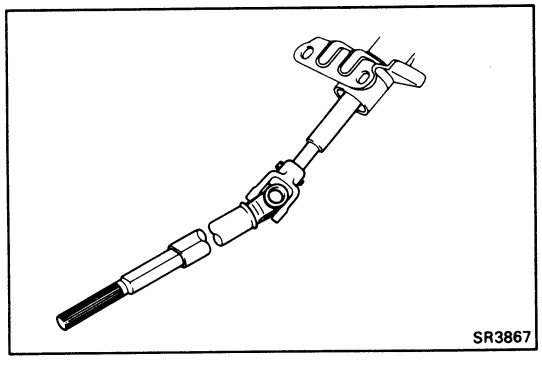

17. CHECK OPERATION OF TILT STEERING

(a) Check that there is no axial play at the end of the main shaft.

(b) With the main shaft in the neutral position, push the tilt lever and check that the main shaft rises to the uppermost position.

(c) Lower the main shaft, and check that it locks in the uppermost position.

MANUAL STEERING GEAR HOUSING

REMOVAL AND INSTALLATION OF STEERING GEAR HOUSING

Remove and install the parts as shown.

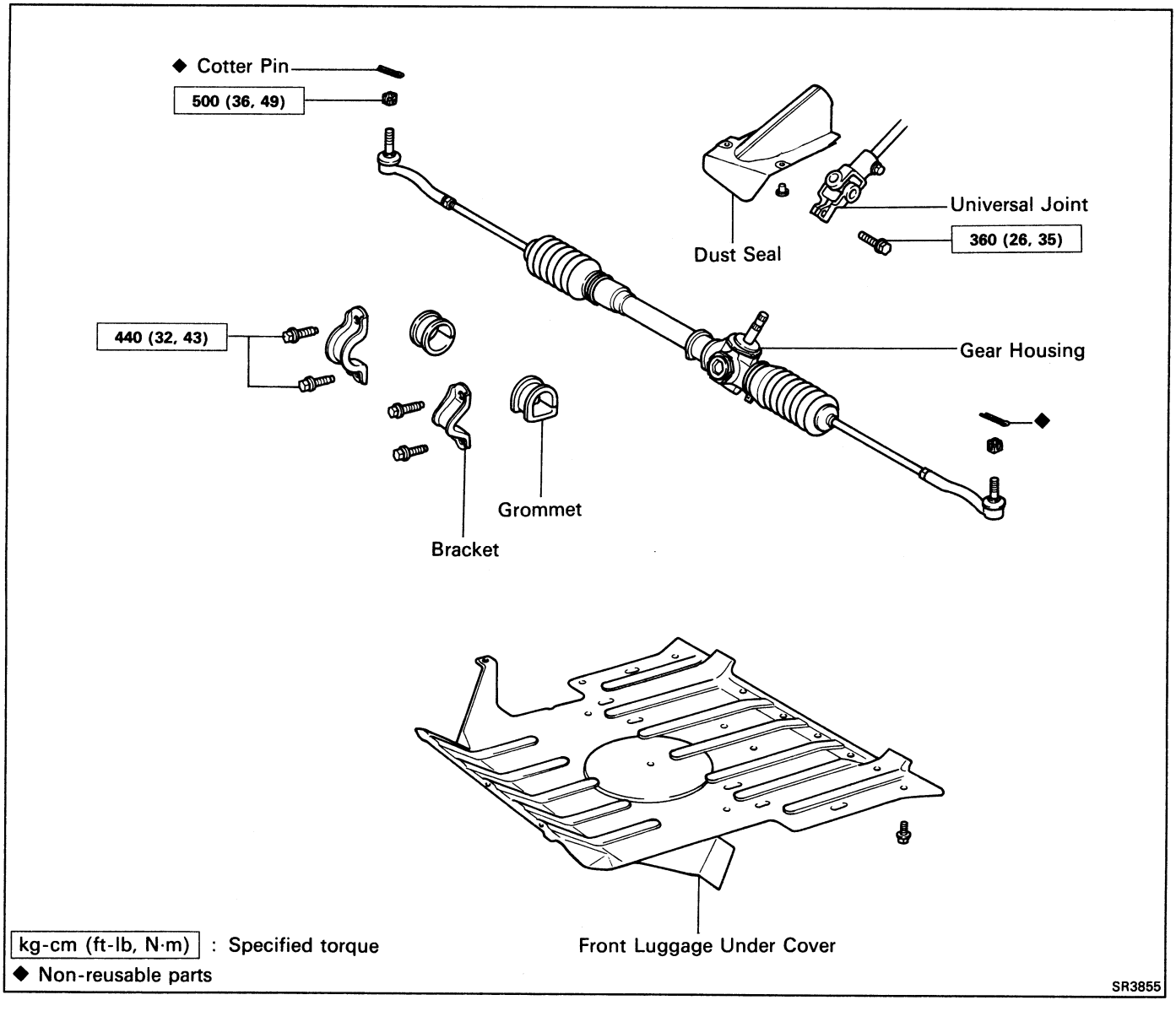

(MAIN POINTS OF REMOVAL AND INSTALLATION)

(USA)

NOTICE: When disconnecting the universal joint during removal of the gear housing, remove the steering wheel and perform centering of the spiral cable. (See page AB-15)

If the operation is performed without removing the steering wheel, use the procedure below to make sure the steering wheel is firmly fixed in position and cannot turn.

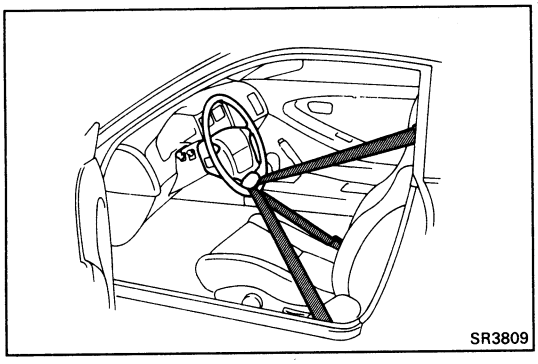

1. DISCONNECT UNIVERSAL JOINT

(a) Position the front wheels facing straight ahead.

(b) Using the seat belt of the driver's seat, fix the steering wheel so that it does not turn.

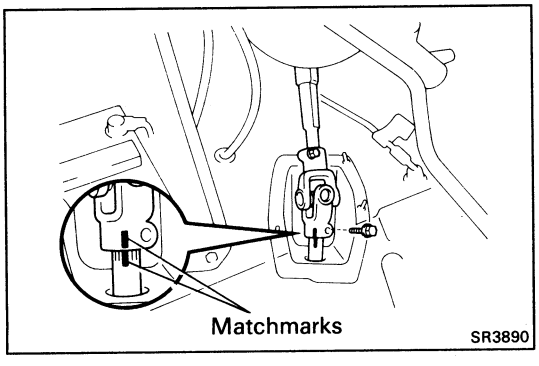

(c) Place matchmarks on the universal joint and pinion shaft.

(d) Loosen the bolt on the upper side of the universal joint, remove the bolt on the lower side and disconnect the universal joint.

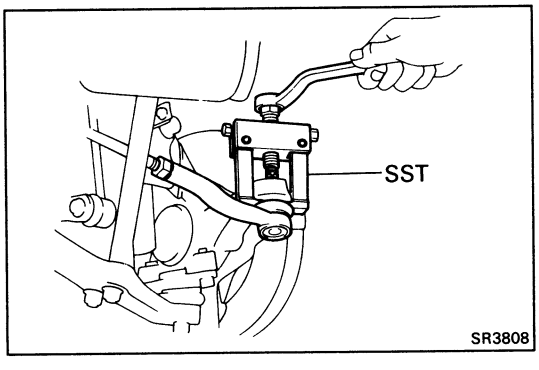

2. DISCONNECT TIE ROD ENDS

(a) Remove the cotter pin and nut.

(b) Using SST, disconnect the tie rod end from the knuckle arm.

SST 09628-62011

3. CONNECT UNIVERSAL JOINT

(a) Set the gear housing so that it matches the dimensions shown below, with the gear housing at the center point.

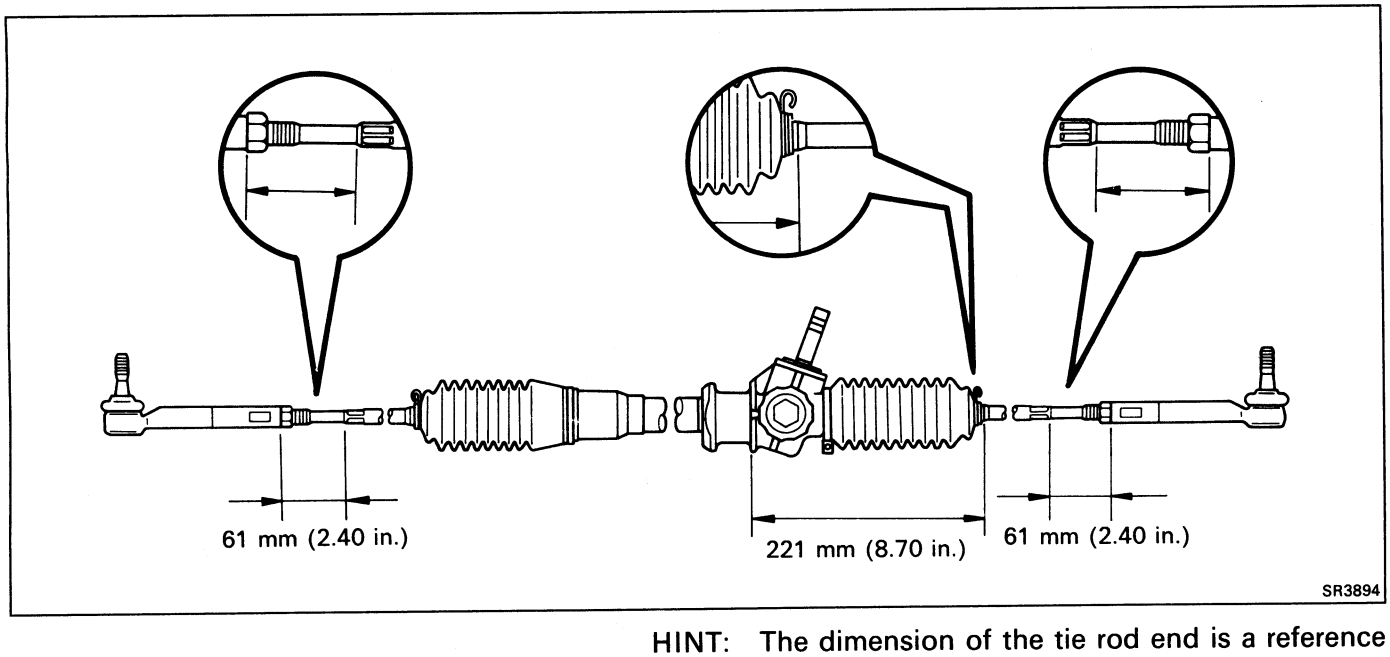

HINT: The dimension of the tie rod end is a reference value, so always adjust the toe-in before tightening the lock nut.

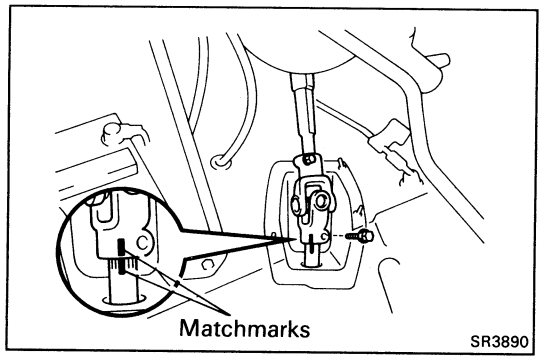

(b) Align matchmarks on the universal joint and pinion shaft and connect them.

4. **CENTER SPIRAL CABLE**

If the steering wheel has been removed, or the steering wheel may have moved during the operation, always perform centering of the spiral cable.
(See page AB-16)

5. **CHECK STEERING WHEEL CENTER POINT**

6. **CHECK TOE-IN**
(See page SA-4)

(CANADA)

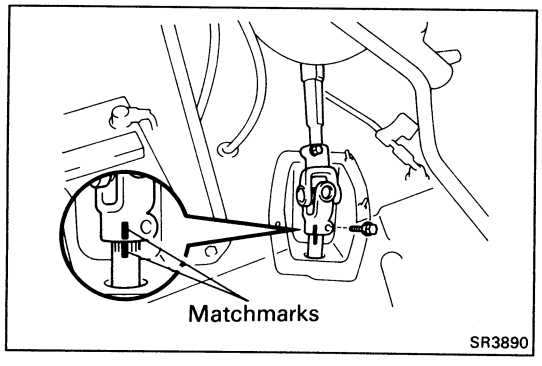

1. **DISCONNECT UNIVERSAL JOINT**

(a) Place matchmarks on the universal joint and pinion shaft.

(b) Loosen the bolt on the upper side of the universal joint, remove the bolt on the lower side and disconnect the universal joint.

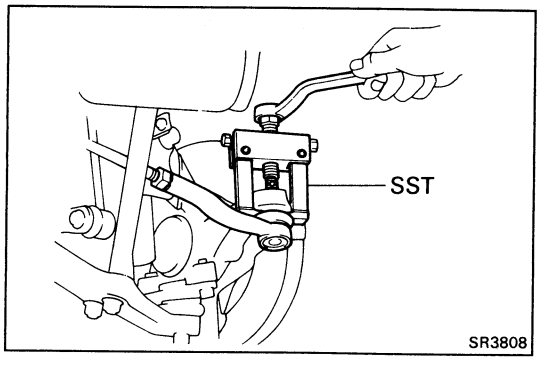

2. **DISCONNECT TIE ROD ENDS**

(a) Remove the cotter pin and nut.

(b) Using SST, disconnect the tie rod end from the knuckle arm.

SST 09628-62011

3. **CHECK STEERING WHEEL CENTER POINT**

4. **CHECK TOE-IN**
(See page SA-4)

COMPONENTS

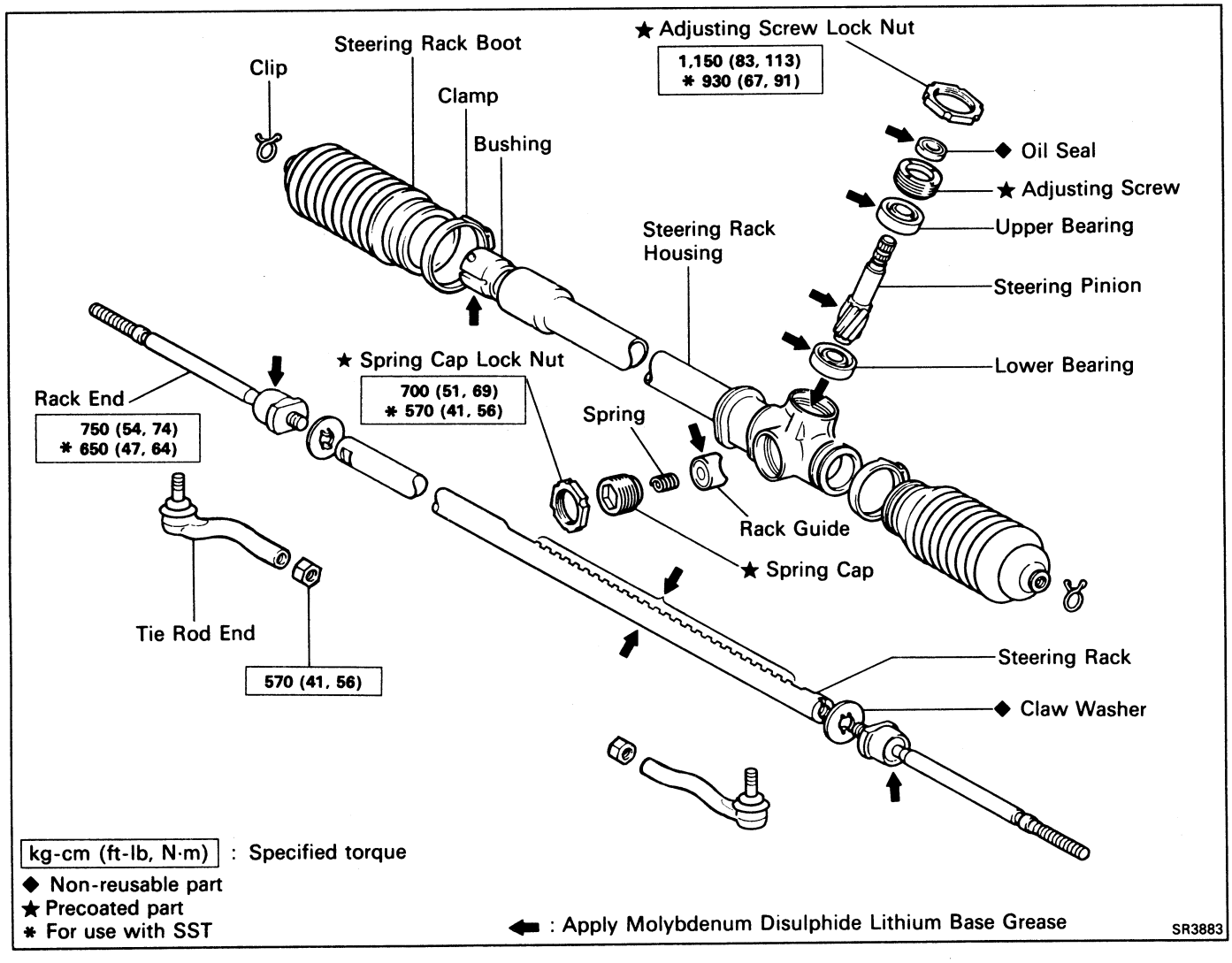

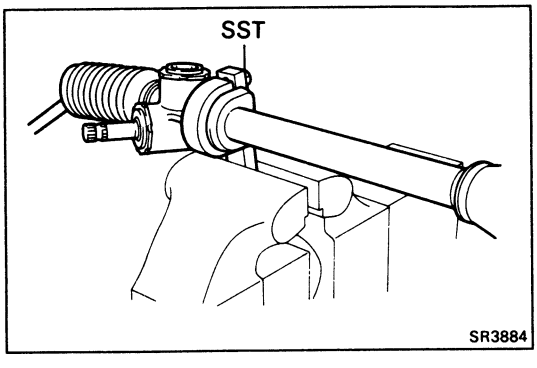

DISASSEMBLY OF GEAR HOUSING

1. CLAMP GEAR HOUSING IN VISE

Using SST, clamp the gear housing in a vise.

SST 09612-00012

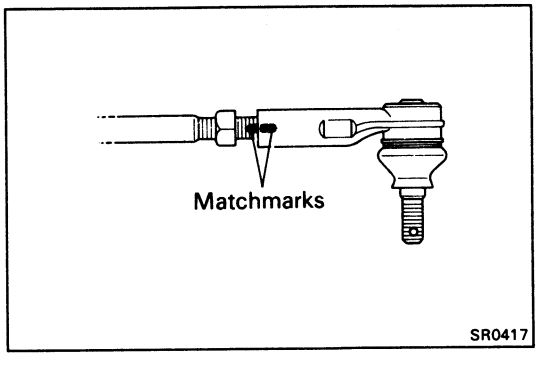

2. REMOVE TIE ROD ENDS

(a) Loosen the lock nuts and place matchmarks on the tie rod ends and rack ends.

(b) Remove the tie rod ends and lock nuts.

3. REMOVE RACK BOOTS

(a) Remove the clips and clamps.

(b) Remove the rack boots.

(c) Mark the left and right boots accordingly.

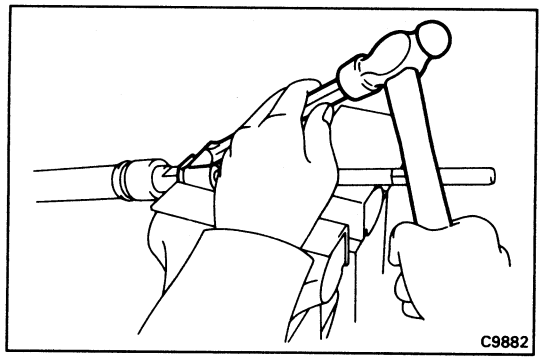

4. REMOVE RACK ENDS

(a) Unstake the claw washers.

NOTICE: Avoid any impact to the rack.

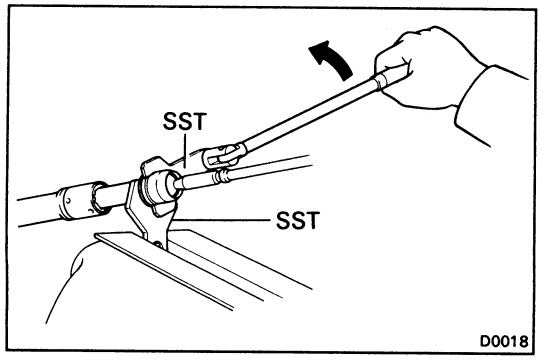

(b) Using SST, remove the rack ends.

SST 09612-10093 (09628-10020) and
09612-24014 (09617-24011)

(c) Mark the left and right rack ends accordingly.

(d) Remove the claw washers.

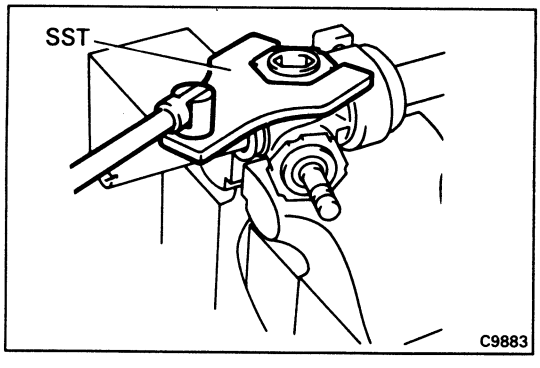

5. REMOVE RACK GUIDE SPRING CAP LOCK NUT

Using SST, remove the rack guide spring cap lock nut.

SST 09612-10093 (09617-10010)

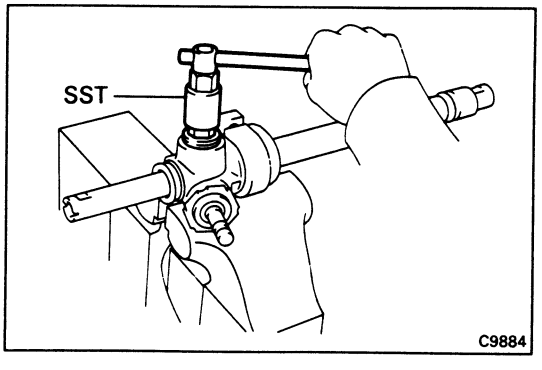

6. REMOVE RACK GUIDE SPRING CAP

Using SST, remove the rack guide spring cap.

SST 09612-24014 (09612-10022)

7. REMOVE RACK GUIDE SPRING

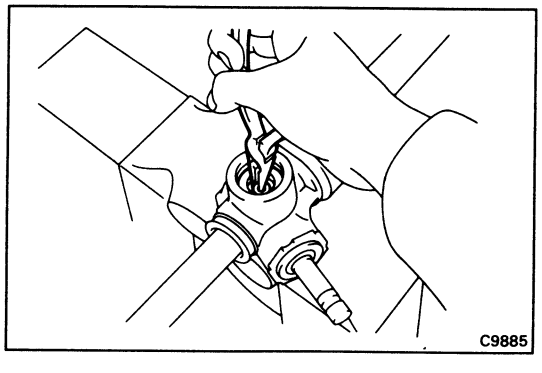

8. REMOVE RACK GUIDE

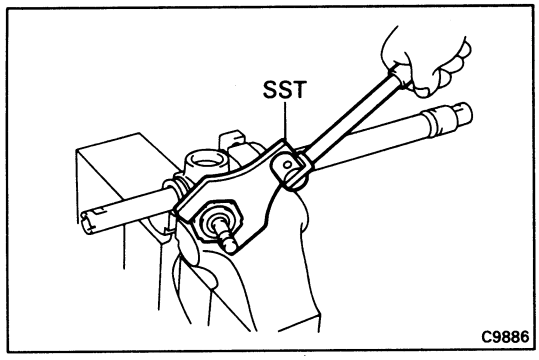

9. REMOVE PINION BEARING ADJUSTING SCREW LOCK NUT

Using SST, remove the pinion bearing adjusting screw lock nut.

SST 09612-10093 (09617-10010)

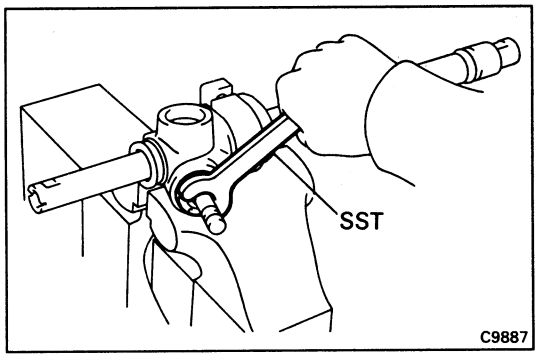

10. REMOVE PINION BEARING ADJUSTING SCREW

Using SST, remove the pinion bearing adjusting screw.

SST 09612-24014 (09616-10020)

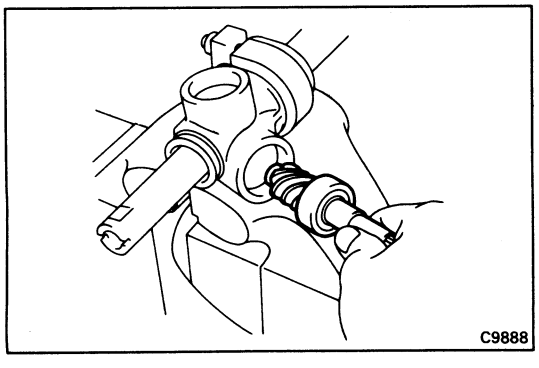

11. REMOVE PINION WITH UPPER BEARING

HINT: Be careful not to damage the serrations.

(a) Fully pull the rack from the housing side and align the rack notched portion with the pinion.

(b) Remove the pinion together with the upper bearing.

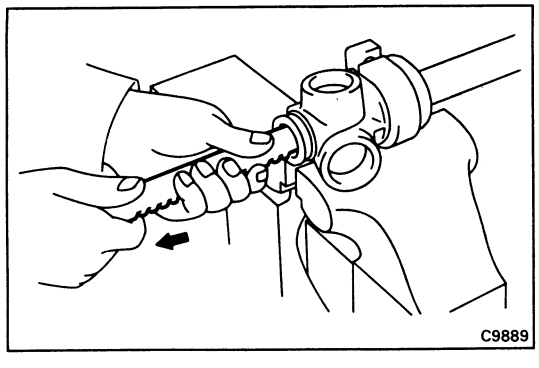

12. REMOVE RACK

Remove the rack from the pinion side without revolving it.

HINT: If the rack is pulled from the tube side, there is a possibility of damaging the bushing with the rack teeth surface.

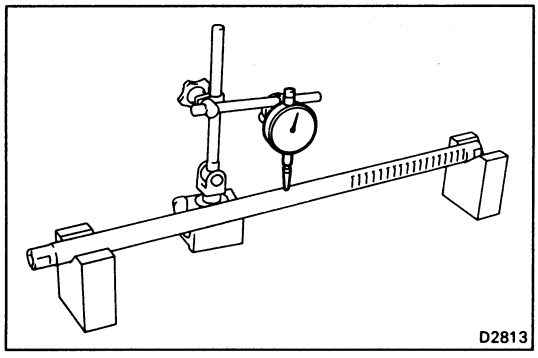
D2813

INSPECTION AND REPAIR OF GEAR HOUSING COMPONENTS

1. INSPECT RACK

(a) Check the rack for runout and for teeth wear or damage.

Maximum runout: 0.3 mm (0.012 in.)

(b) Check the back surface for wear or damage.

If faulty, replace it.

NOTICE: Do not use a wire brush when cleaning.

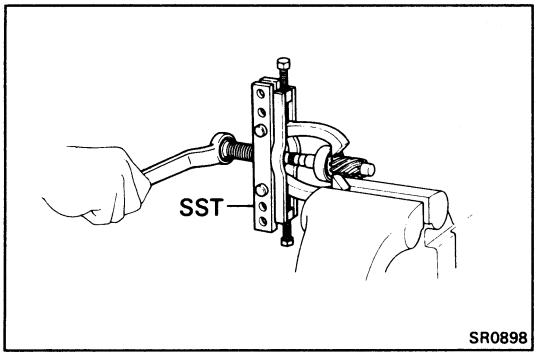

SR0898

2. IF NECESSARY, REPLACE PINION UPPER BEARING

(a) Using SST, remove the upper bearing.

SST 09950-20017

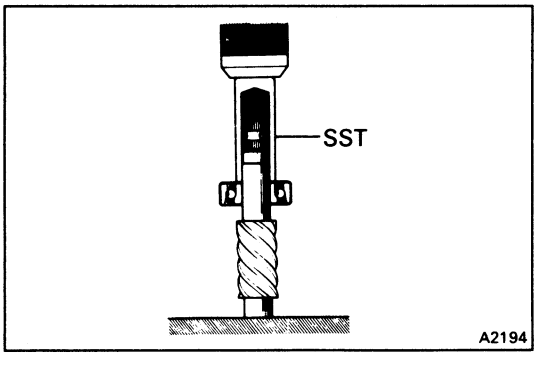

A2194

(b) Using SST, install a new upper bearing.

SST 09612-24014 (09612-10061)

3. IF NECESSARY, REPLACE PINION LOWER BEARING

(a) Heat the rack housing to above 80°C (176°F).

(b) Tap the rack housing with a plastic hammer or such to remove the lower bearing by recoil.

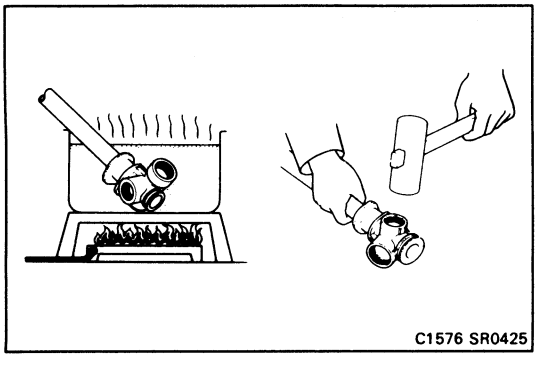
C1576 SR0425

(c) Heat the rack housing to above 80°C (176°F).

(d) Using SST, install a new lower bearing.

SST 09620-30010 (09631-00020) and 09630-24013 (09620-24030)

HINT: Observe the correct bearing direction.

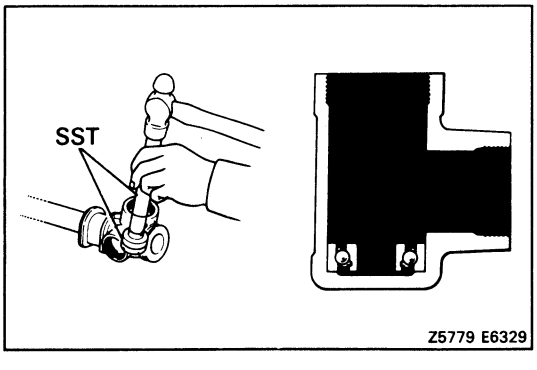

Z5779 E6329

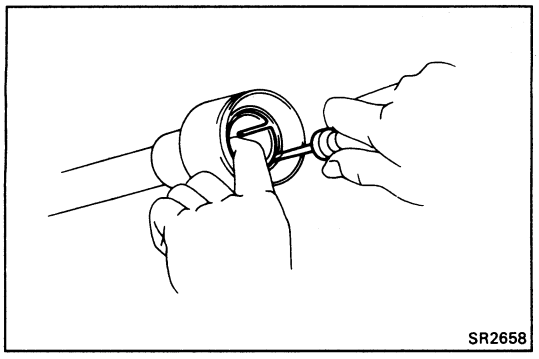
SR2658

4. IF NECESSARY, REPLACE RACK BUSHING

(a) Using a screwdriver, loosen the three bushing claws and remove the rack busing from the rack housing.

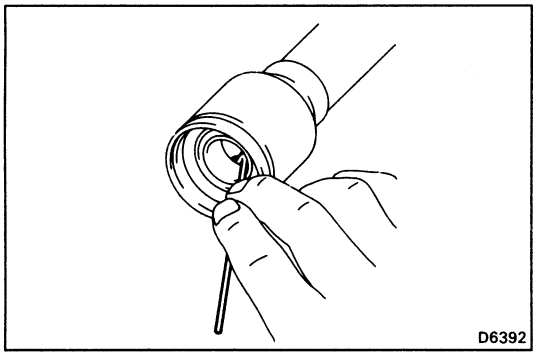
D6392

(b) Insure that the tube holes are not clogged with grease.

HINT: If the tube holes are clogged, the pressure inside the boot will change after it is assembled and the steering wheel turned.

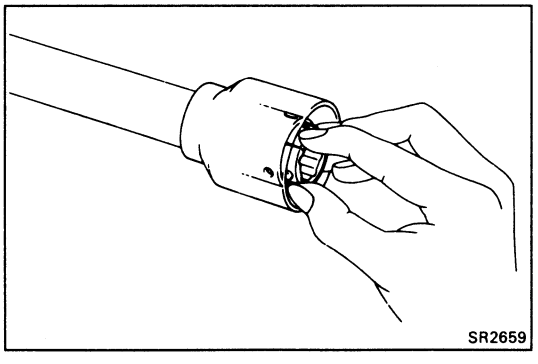
SR2659

(c) Install a new bushing into the rack housing, making sure to align into the three holes.

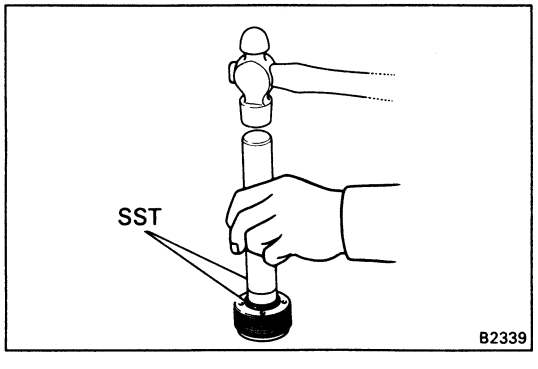

B2339

5. IF NECESSARY, REPLACE PINION OIL SEAL

(a) Using SST, remove the pinion oil seal.

SST 09620-30010 (09631-00020) and 09630-24013 (09620-24010)

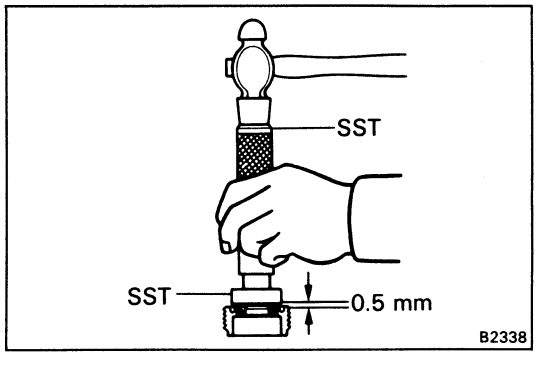

B2338

(b) Using SST, drive in a new oil seal until it is protruding 0.5 mm (0.020 in.).

SST 09620-30010 (09631-00020) and 09630-24013 (09620-24020)

ASSEMBLY OF GEAR HOUSING

(See page SR-18)

1. **PACK MOLYBDENUM DISULPHIDE LITHIUM BASE GREASE**
(See page SR-18)

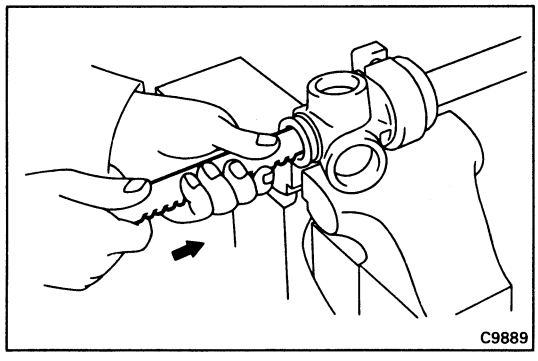
C9889

2. **INSTALL RACK INTO RACK HOUSING**
   (a) From the pinion side, install the rack into the rack housing.
   (b) Set the rack notched side so that the pinion can be positioned inside.

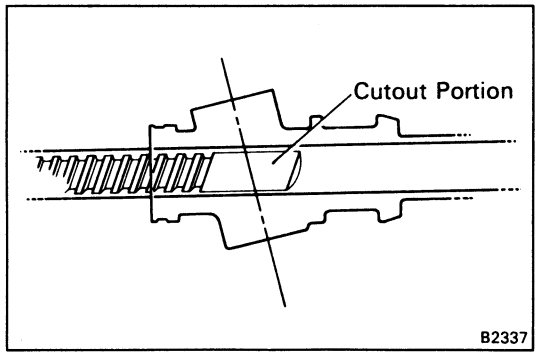

B2337

   (c) Line up the cutout portion of the rack with the pinion.

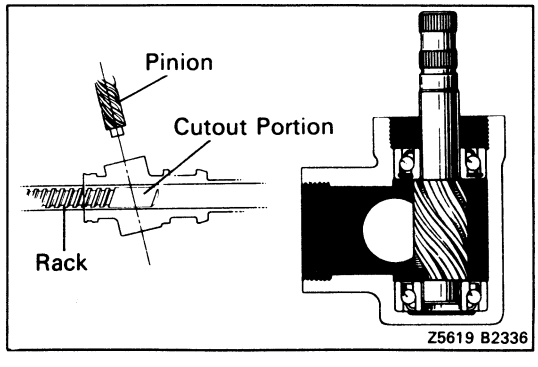

Z5619 B2336

3. **INSTALL PINION INTO HOUSING**
Insure that the pinion end is securely in the lower bearing.

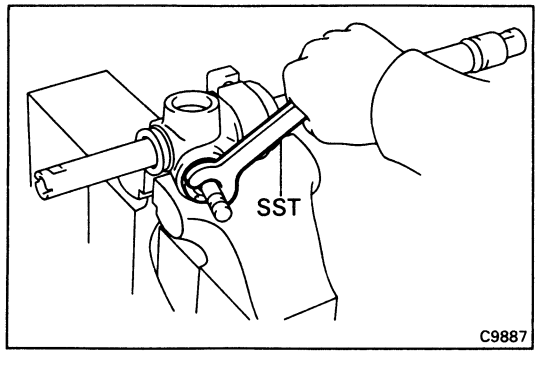

C9887

4. **INSTALL PINION BEARING ADJUSTING SCREW**
   (a) Coat sealant onto the screw threads.
   Sealant: Part No. 08833-00080, THREE BOND 1344, LOCTITE 242 or equivalent
   (b) Using SST, install the pinion bearing adjusting screw.
   SST 09612-24014 (09616-10020)

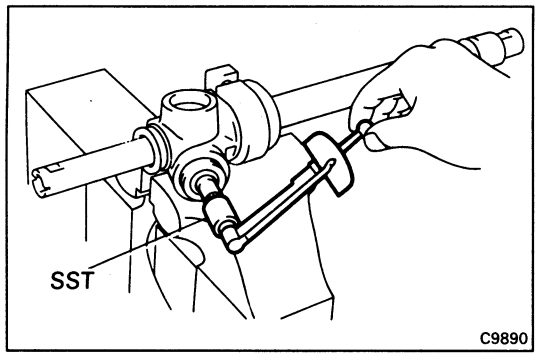

5. ADJUST PINION PRELOAD

(a) Line up the cutout portion of the rack with the pinion.

(b) Using SST, tighten the pinion bearing adjusting screw to the point where the turning torque is 3.7 kg-cm (3.2 in.-lb, 0.4 N·m).

SST 09612-24014 (09616-10010, 09616-10020)

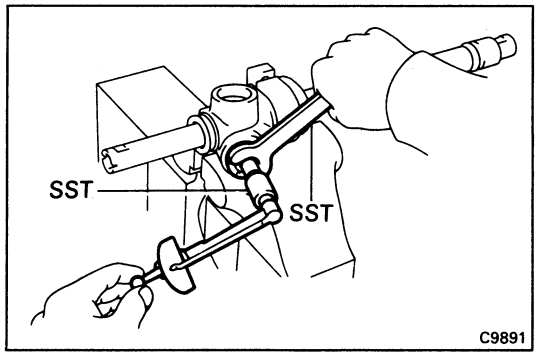

(c) Using SST, loosen the pinion bearing adjusting screw to the point where the turning torque is 2.3 – 3.3 kg-cm (2.0 – 2.9 in.-lb, 0.2 – 0.3 N·m).

SST 09612-24014 (09616-10010, 09616-10020)

Preload (turning): 2.3 – 3.3 kg-cm (2.0 – 2.9 in.-lb, 0.2 – 0.3 N·m)

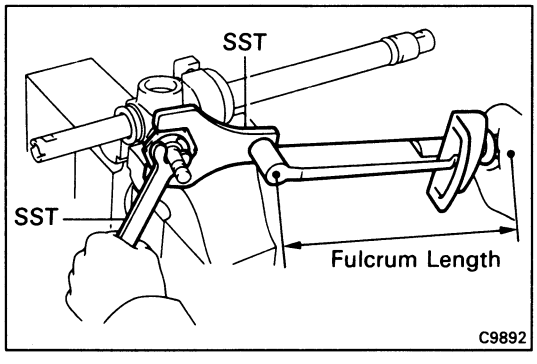

6. INSTALL PINION BEARING ADJUSTING SCREW LOCK NUT

(a) Apply sealant to 2 or 3 threads of the lock nut.

Sealant: Part No. 08833-00080, THREE BOND 1344, LOCTITE 242 or equivalent

(b) Using SST, install the lock nut.

SST 09612-10093 (09617-10010) and 09612-24014 (09616-10020)

Torque: 930 kg-cm (67 ft-lb, 91 N·m)

HINT: Use a torque wrench with a fulcrum length of 425 mm (16.73 in.).

(c) Recheck the pinion preload.

If incorrect, readjust.

Preload (turning): 1.5 – 2.5 kg-cm (1.3 – 2.2 in.-lb, 0.1 – 0.2 N·m)

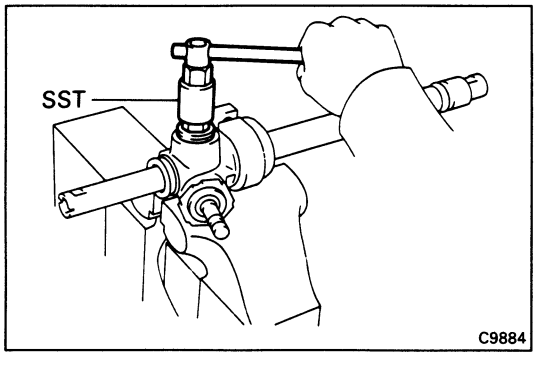

7. INSTALL RACK GUIDE AND SPRING

8. INSTALL RACK GUIDE SPRING CAP

(a) Apply sealant to 2 or 3 threads of the cap.

Sealant: Part No. 08833-00080, THREE BOND 1344, LOCTITE 242 or equivalent

(b) Mesh the rack with the pinion.

(c) Using SST, install the rack guide spring cap.

SST 09612-24014 (09612-10022)

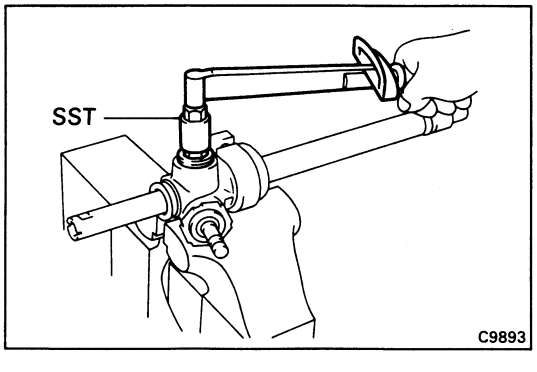

9. ADJUST TOTAL PRELOAD

(a) Using SST, tighten the rack guide spring cap.

SST 09612-24014 (09612-10022)

Torque: 250 kg-cm (18 ft-lb, 25 N·m)

(b) Using SST, return the rack spring cap 25°.

SST 09612-24014 (09612-10022)

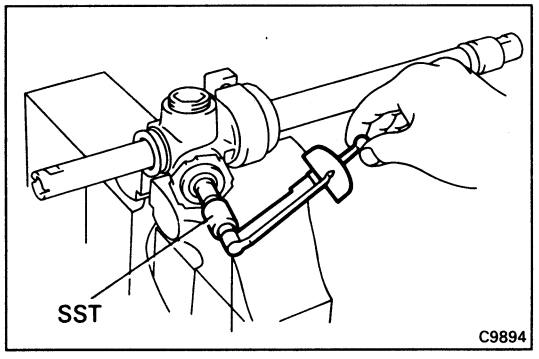

(c) Measure the total preload with SST.

SST 09612-24014 (09616-10010)

Preload (turning): 6 – 13 kg-cm (5.2 – 11.3 in.-lb, 0.6 – 1.3 N·m)

- If preload is insufficient:
  Retorque the rack guide spring cap, and return it 12° or slightly less.
- If there is excess preload:
  Slightly return the rack guide spring cap.

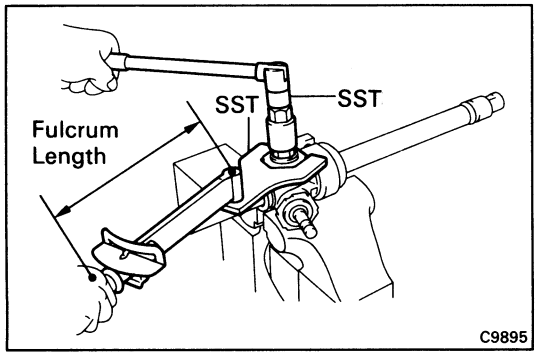

10. INSTALL RACK GUIDE SPRING CAP LOCK NUT

(a) Apply sealant to 2 or 3 threads of the lock nut.

Sealant: Part No. 08833-00080, THREE BOND 1344, LOCTITE 242 or equivalent

(b) Using SST, install the lock nut.

SST 09612-10093 (09617-10010) and 09612-24014 (09612-10022)

Torque: 570 kg-cm (41 ft-lb, 56 N·m)

HINT: Use a torque wrench with a fulcrum length of 340 mm (13.39 in.).

(c) Recheck the total preload. If incorrect, readjust.

Preload (turning): 6 – 13 kg-cm (5.2 – 11.3 in.-lb, 0.6 – 1.3 N·m)

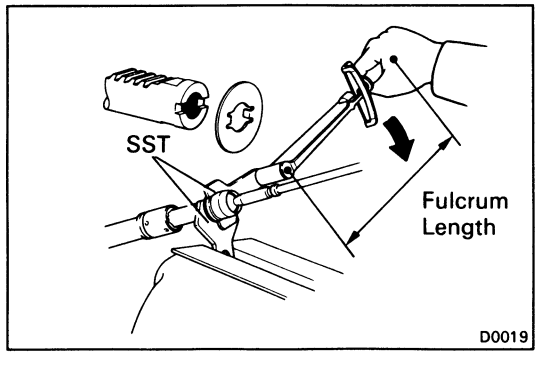

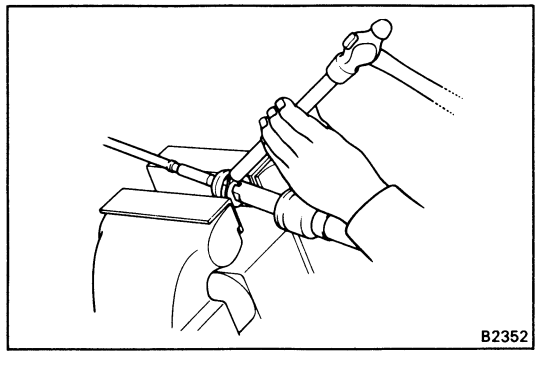

11. INSTALL RACK ENDS

(a) Install new claw washers.

HINT: Align the claw of the claw washer with the rack groove.

(b) Using SST, install the rack ends.

SST 09612-10093 (09628-10020) and 09612-24014 (09617-24011)

Torque: 650 kg-cm (47 ft-lb, 64 N·m)

HINT: Use a torque wrench with a fulcrum length of 340 mm (13.39 in.).

(c) Using a brass bar and hammer, stake the claw washers.

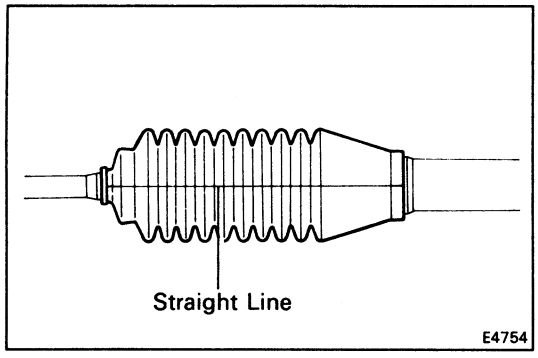

12. INSTALL RACK BOOTS

(a) Install the rack boots.

HINT: Be careful not to damage or twist the boot. The left and right boots are different. Be careful not to interchange them.

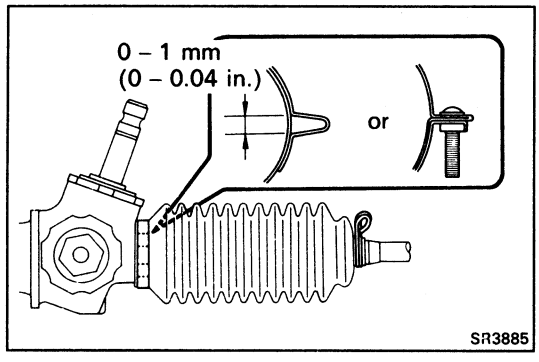

(b) Install the clamps and clips.

HINT: Face the open ends of the clip outward as shown, to avoid damage to the boot.

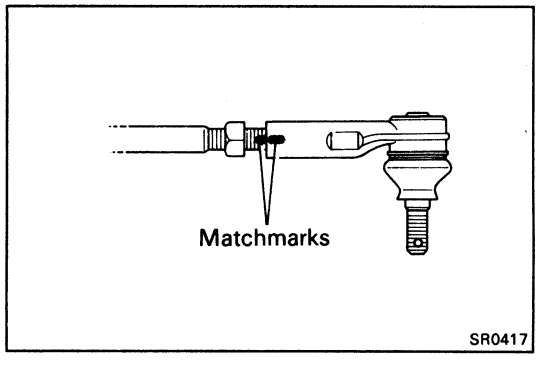

13. INSTALL TIE ROD ENDS

(a) Screw the lock nuts and tie rod ends onto the rack ends until the matchmarks are aligned.

(b) After adjusting toe-in, torque the lock nuts.

Torque: 570 kg-cm (41 ft-lb, 56 N·m)

POWER STEERING

Description

EHPS (Electro-Hydraulic Power Steering)

In conventional and ordinary hydraulically-controlled power steering, hydraulic pressure needed for control is generated when the pump is turned by the engine. In the EHPS, the pump is turned by an electric motor.

The ECU controls the voltage acting on the pump motor according to the movement of the steering wheel and the vehicle speed. The pump motor speed is changed accordingly to modulate the hydraulic pressure being generated in the pump.

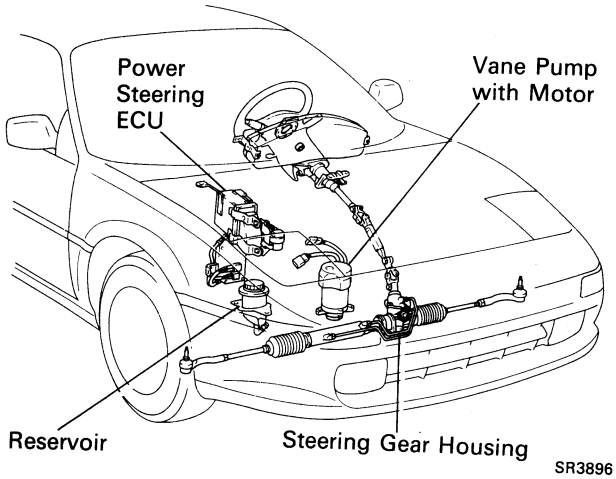

SR3896

PRINCIPLES OF POWER STEERING

NEUTRAL (STRAIGHT-AHEAD) POSITION

Fluid from the pump is sent to the control valve. If the control valve is in the neutral position, all the fluid will flow through the control valve into the relief port and back to the pump. At this time, hardly any pressure is created and because the pressure on the cylinder piston is equal on both sides, the piston will not move in either direction.

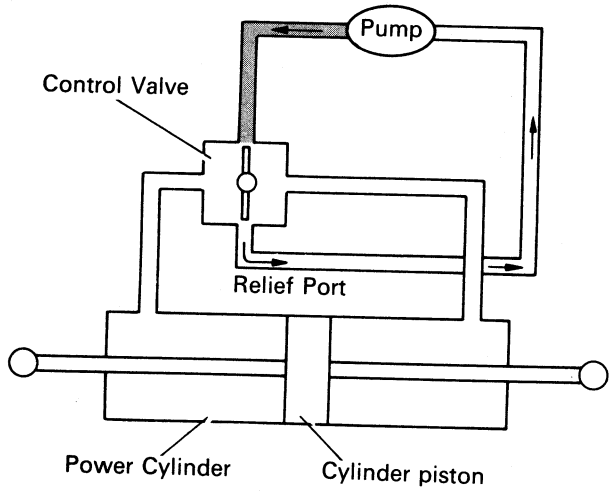

SR2390

WHEN TURNING

When the steering main shaft is turned in either direction, the control valve also moves, closing one of the fluid passages. The other passage then opens wider, causing a change in fluid flow volume and, at the same time, pressure is created. Consequently, a pressure difference occurs between both sides of the piston and the piston moves in the direction of the lower pressure so that the fluid in the cylinder is forced back to the pump through the control valve.

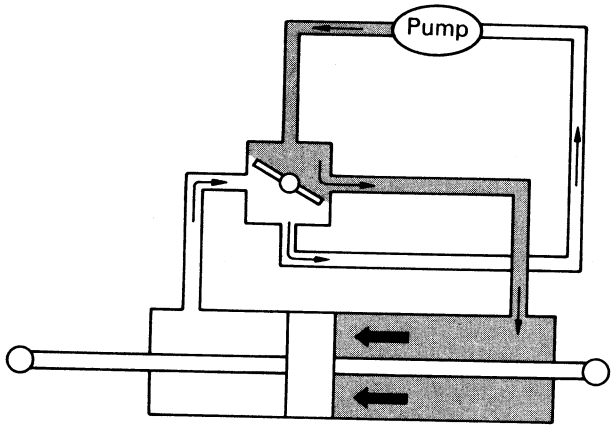

SR2391

SERVICE HINT

Troubles with the power steering system are usually concerned with hard steering due to the fact that there is no assist. In such cases, before attempting to make repairs, it is necessary to determine whether the trouble lies with the pump or with the gear housing. To do this, an on-vehicle inspection can be made by using a pressure gauge.

ON-VEHICLE INSPECTION

Power steering is a hydraulic device and problems are normally due to insufficient fluid pressure acting on the piston. This could be caused by either the pump not producing the specified fluid pressure or the control valve in the gear housing not function properly so that the proper fluid pressure can not be obtained.

If the fault lies with the pump, the same symptoms will generally occur whether the steering wheel is turned fully to the right or left. On the other hand, if the fault lies with the control valve, there will generally be a difference between the amount of assist when the steering wheel is turned to the left and right, causing harder steering. However, if the piston seal of the power cylinder is worn, there will be a loss of fluid pressure whether the steering wheel is turned to the right or left and the symptoms will be the same for both.

Before performing an on-vehicle inspection , a check must first be made to confirm that the power steering system is completely free of any air. If there is any air in the system, the volume of this air will change when the fluid pressure is raised, causing a fluctuation in the fluid pressure so that the power steering will not function properly. To determine if there is any air in the system, check to see if there is a change of fluid level in the reservoir tank when the steering wheel is turned fully to the right or left.

For example, if there is air in the system, it will be compressed to a smaller volume when the steering wheel is turned, causing a considerable drop in the fluid level. If the system is free of air, there will be very little change in the level even when the fluid pressure is raised. This is because the fluid, being a liquid, does not change volume when compressed. The little change in the fluid level is due to expansion of the hoses between the pump and gear housing when pressure rises.

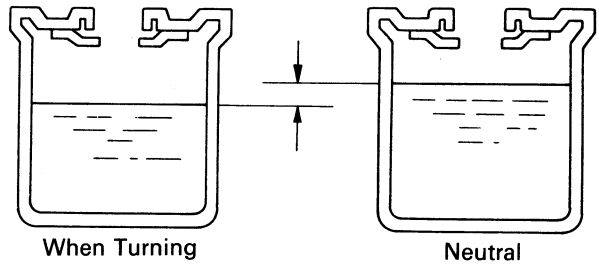

SR2392 SR2393

Also, air in the system will sometimes result in an abnormal noise occuring from the pump or gear housing when the steering wheel is fully turned in either direction.

This on-vehicle inspection must be performed every time to ensure that the power steering system is working properly after overhauling or replacing the pump or gear housing.

GEAR HOUSING

If the gear housing is secured directly in a vise during overhaul, there is danger of deforming it, so always first secure it in the SST provided (rack and pinion steering rack housig stand) before placing it in the vise.

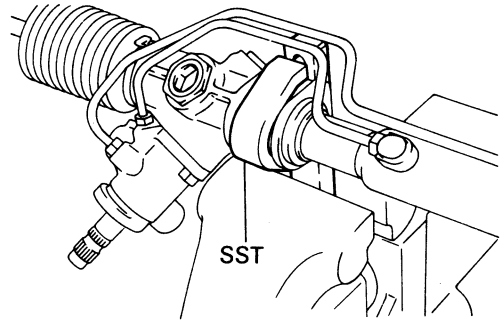

X2369R

The oil seals on both sides of the power cylinder are for the prevention of leakage of the high pressure fluid which acts on the piston. Always use new oil seals when reassembling and be very careful not to scratch or damage them.

Because of the high pressure, even the slightest scratch will cause fluid leakage, resulting in an inoperative power steering system.

Also, be very careful not to scratch the sliding portion of the rack which makes contact with the oil seals. When removing the rack ends from the rack, it is very easy to cause a burr when holding the tip of the rack with a wrench. Therefore, before assembling the rack, first check the tip for burrs and remove any with an oil stone.

Teflon rings are used for the piston and control valve. These teflon rings are highly durable against wear, but if it is necessary to replace them, be careful not to stretch the new ones. After installing a teflon ring into its groove, snug it down into the groove before assembly of the cylinder or housing to prevent possible damage.

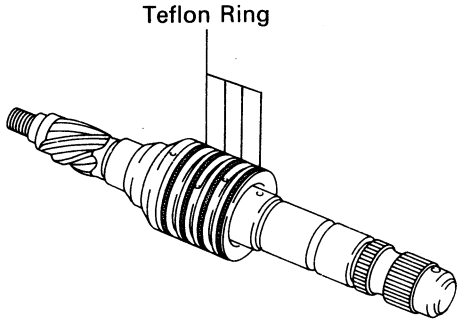

SR3900

As with the rack and pinion type steering, preload is very important. If the preload is not correct, it could result in such trouble as steering wheel play or shimmy or lack of durability, so always make sure that it is correct.

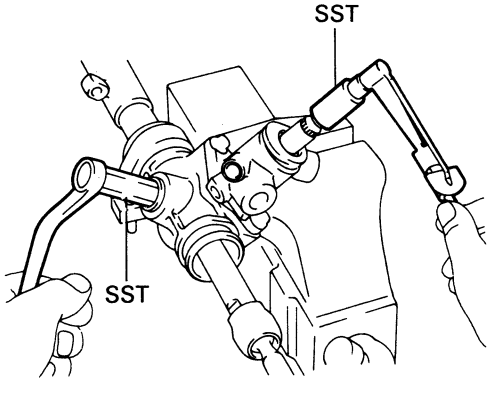

X2413R

On-Vehicle Inspection

FLUID LEVEL CHECK

1. **KEEP VEHICLE LEVEL**

2. **BOOST FLUID TEMPERATURE**

With the engine idling at 1,000 rpm or less, turn the steering wheel from lock to lock ten or more times to boost fluid temperature.

Fluid temperature: 40°C or more (104°F or more)

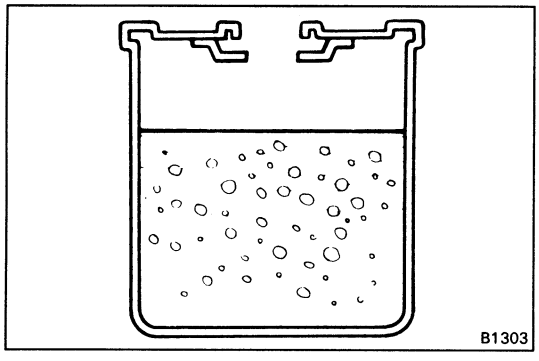

3. **CHECK FOR FOAMING OR EMULSIFICATION**

HINT: Foaming and emulsification indicate either the existence of air in the system or that the fluid level is too low.

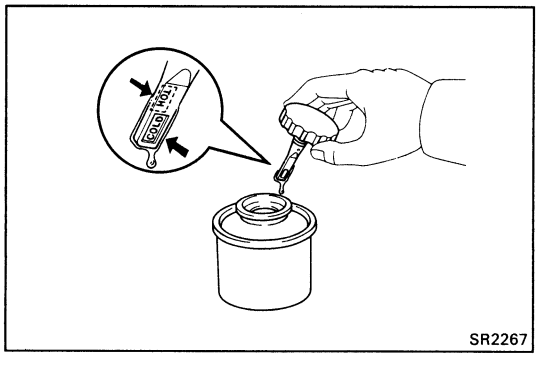

4. **CHECK FLUID LEVEL IN RESERVOIR**

Check the fluid level and add fluid if necessary.

Fluid: TOYOTA POWER STEERING FLUID EH (Part No. 08886-01206) or equivalent

HINT: Check that the fluid level is within the HOT LEVEL of the dipstick. If the fluid is cold, check that it is within the COLD LEVEL of the dipstick.

NOTICE: Use only TOYOTA PS fluid EH or equivalent. Otherwise, you may not get expected power assist.

BLEEDING OF POWER STEERING SYSTEM

1. **CHECK FLUID LEVEL IN RESERVOIR TANK**

Check the fluid level and add fluid if necessary.

Fluid: TOYOTA POWER STEERING FLUID EH (Part No. 08886-01206) or equivalent

HINT: Check that the fluid level is within the HOT LEVEL of the dipstick. If the fluid is cold, check that it is within the COLD LEVEL of the dipstick.

NOTICE: Use only TOYOTA PS fluid EH or equivalent. Otherwise, you may not get expected power assist.

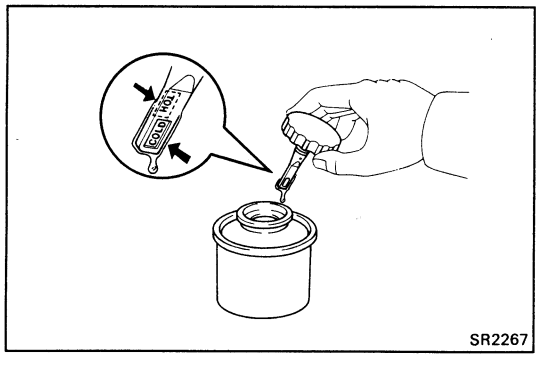

2. **START ENGINE AND TURN STEERING WHEEL FROM LOCK TO LOCK THREE OR FOUR TIMES**

With the engine speed below 1,000 rpm, turn the steering wheel to left or right full lock and keep it there for 2 – 3 seconds, then turn the wheel to the reverse full lock and keep it there for 2 – 3 seconds.

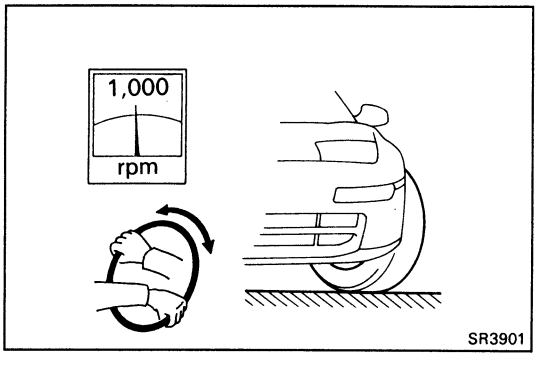

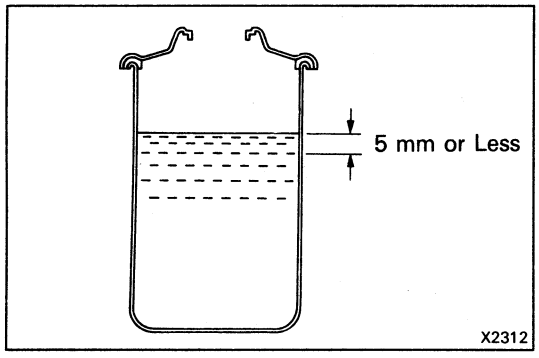

3. **CHECK THAT FLUID IN RESERVOIR IS NOT FOAMY OR CLOUDY AND DOES NOT RISE OVER MAXIMUM WHEN ENGINE IS STOPPED**

Measure the fluid level with the engine running. Stop the engine and measure the fluid level.

Maximum rise: 5 mm (0.20 in.)

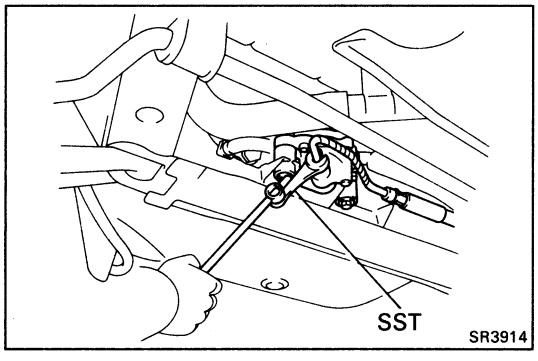

OIL PRESSURE CHECK

NOTICE: When supplementing the power steering fluid, use TOYOTA POWER STEERING FLUID EH or equivalent which is exclusively for EHPS use.

1. **CONNECT PRESSURE GAUGE**

(a) Using SST, disconnect the pressure line from the PS pump.

SST 09631-22020

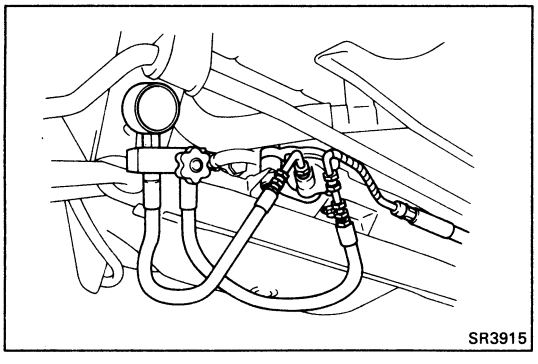

(b) Connect the gauge side of the pressure gauge to the PS pump and the valve side to the pressure line.

(c) Bleed the system. Start the engine and turn the steering wheel from lock to lock two or three times.

(d) Check that the fluid level is correct.

2. **CHECK THAT FLUID TEMPERATURE IS AT LEAST 40°C (104°F)**

3. **START ENGINE AND RUN IT AT IDLE**

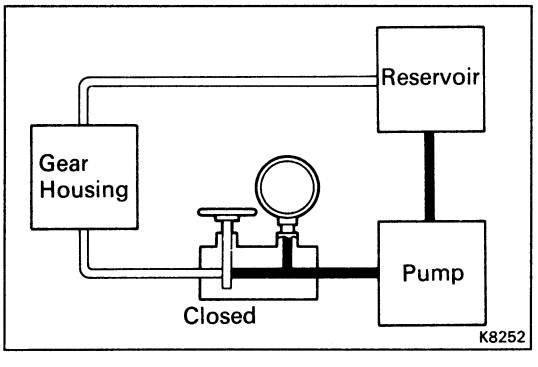

4. **CHECK FLUID PRESSURE READING WITH VALVE CLOSED**

Close the pressure gauge valve and observe the reading on the gauge while turning the steering wheel.

Minimum pressure: 50 kg/cm² (711 psi, 4,903 kPa)

NOTICE:

- **Do not keep the valve closed for more than 10 seconds.**
- **Do not let the fluid temperature become too high.**

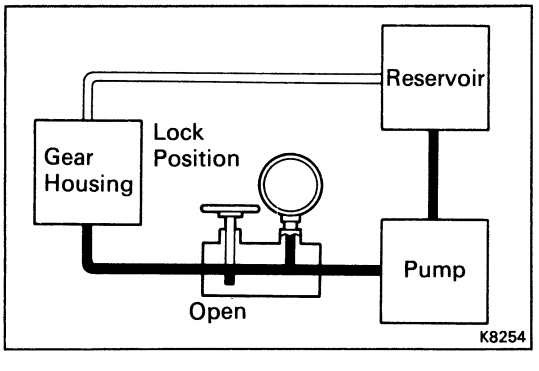

5. **CHECK PRESSURE READING WITH STEERING WHEEL TURNED TO FULL LOCK**

Be sure the pressure gauge valve is fully opened and the engine idling.

Minimum pressure: 50 kg/cm² (711 psi, 4,903 kPa)

NOTICE:

- **Do not maintain lock position for more than 10 seconds.**
- **Do not let the fluid temperature become too high.**

If pressure is low, the gear housing has an internal leak and must be repaired or replaced.

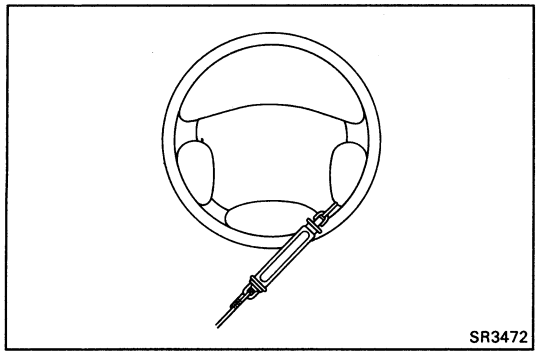
SR3472

6. MEASURE STEERING EFFORT

(a) Center the steering wheel and run the engine at idle.

(b) Using a spring balance, measure the steering effort in both directions.

Maximum steering effort: 4.5 kg (9.9 lb, 44 N)

If steering effort is excessive, repair the power steering unit.

HINT: Be sure to consider the tire type, pressure and contact surface before making your diagnosis.

Power Steering Pump

REMOVAL AND INSTALLATION OF POWER STEERING PUMP

Remove and install the parts as shown.

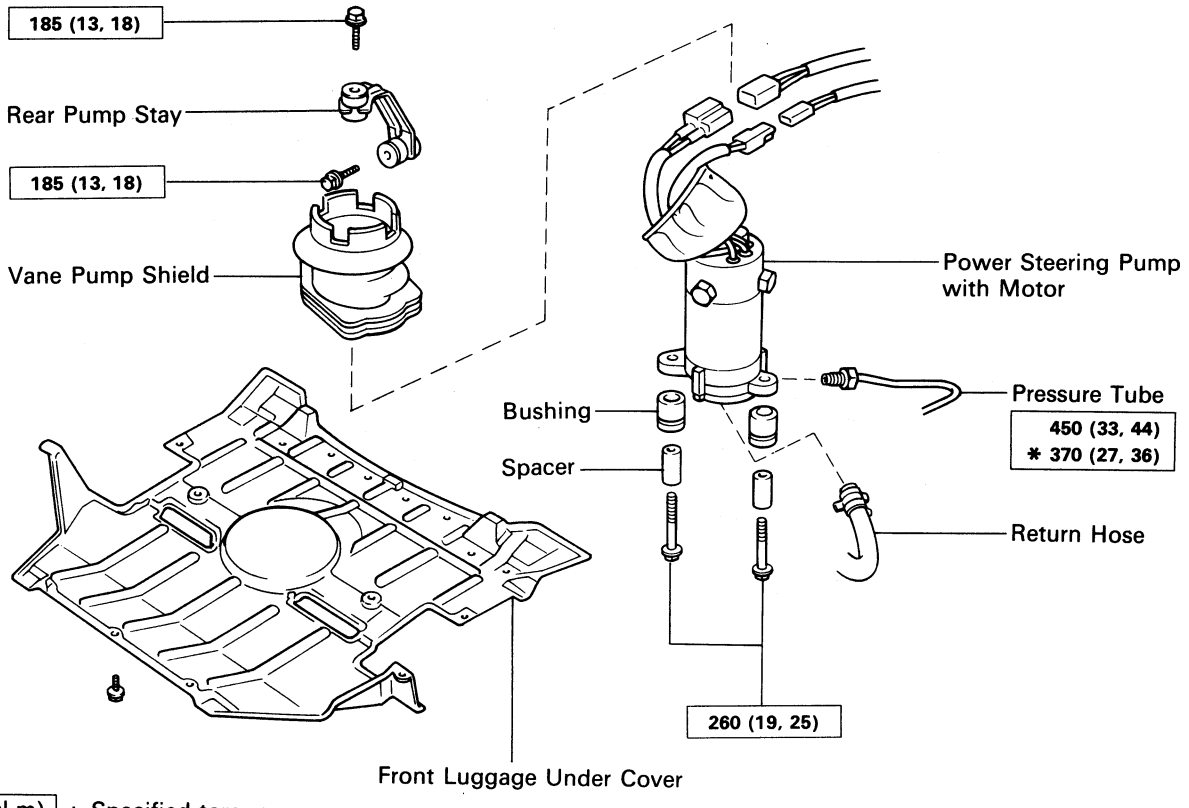

(MAIN POINTS OF REMOVAL AND INSTALLATION)

NOTICE: When supplementing the power steering fluid, use TOYOTA POWER STEERING FLUID EH or equivalent which is exclusively for EHPS use.

HINT: The power steering pump is not to be disassembled, so if a malfunction occurs, replace it as an assembly.

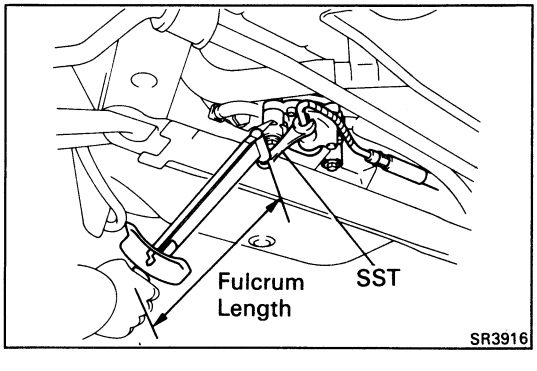

1. **DISCONNECT AND CONNECT PRESSURE LINE**

   Using SST, disconnect and connect the pressure line.

   SST 09631-22020

   Torque: 370 kg-cm (27 ft-lb, 36 N·m)

   HINT: When connecting, use a torque wrench with a fulcrum length of 300 mm (11.81 in.).

2. **BLEED POWER STEERING SYSTEM**
   (See page SR-30)

REPLACEMENT OF POWER STEERING MOTOR BRUSHES

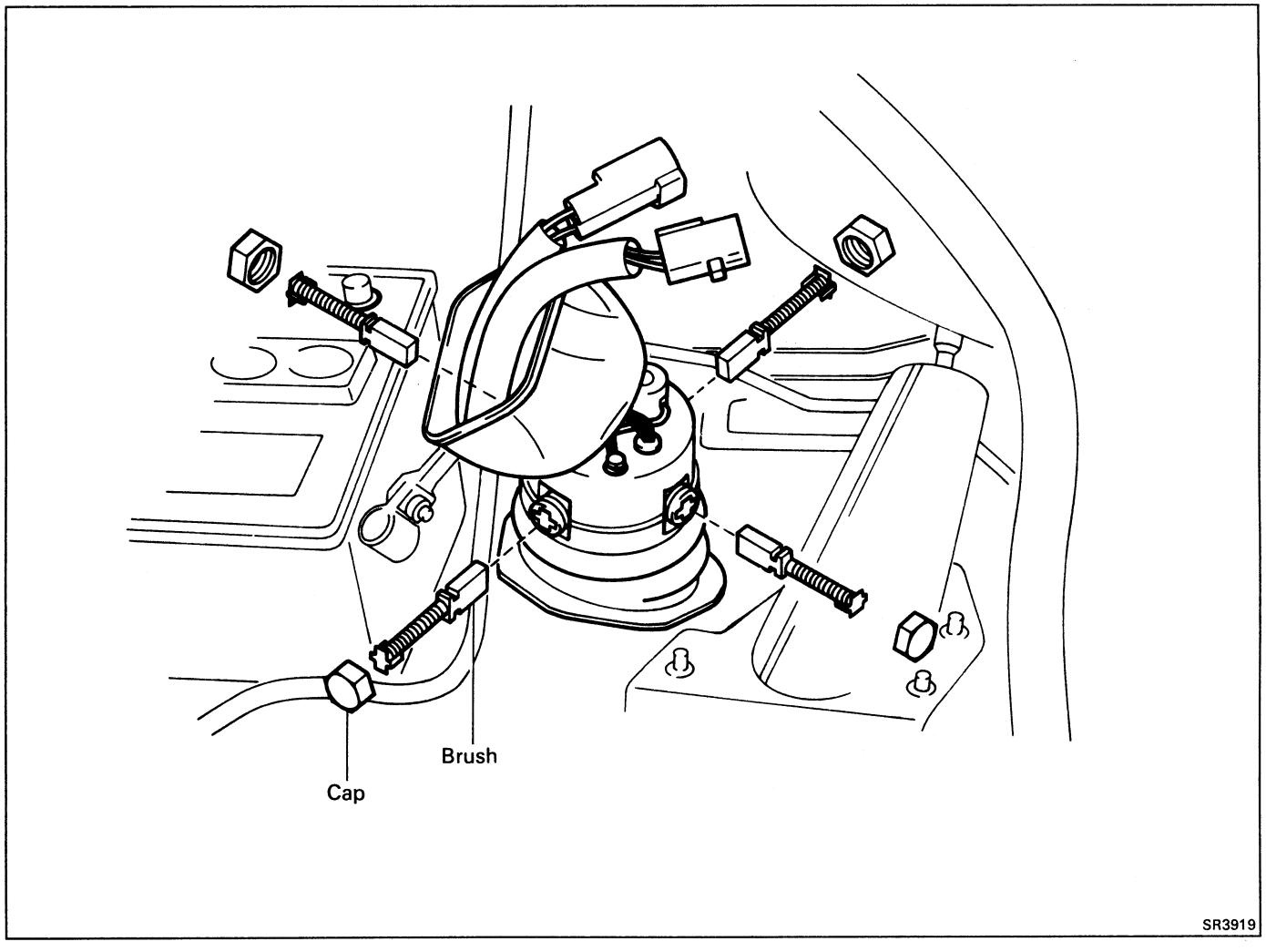

(a) Remove the four caps and brushes.

(b) Install four new brushes.

HINT: Replace all four brushes at the same time.

(c) Install the four caps.

Gear Housing

REMOVAL AND INSTALLATION OF STEERING GEAR HOUSING

Remove and install the parts as shown.

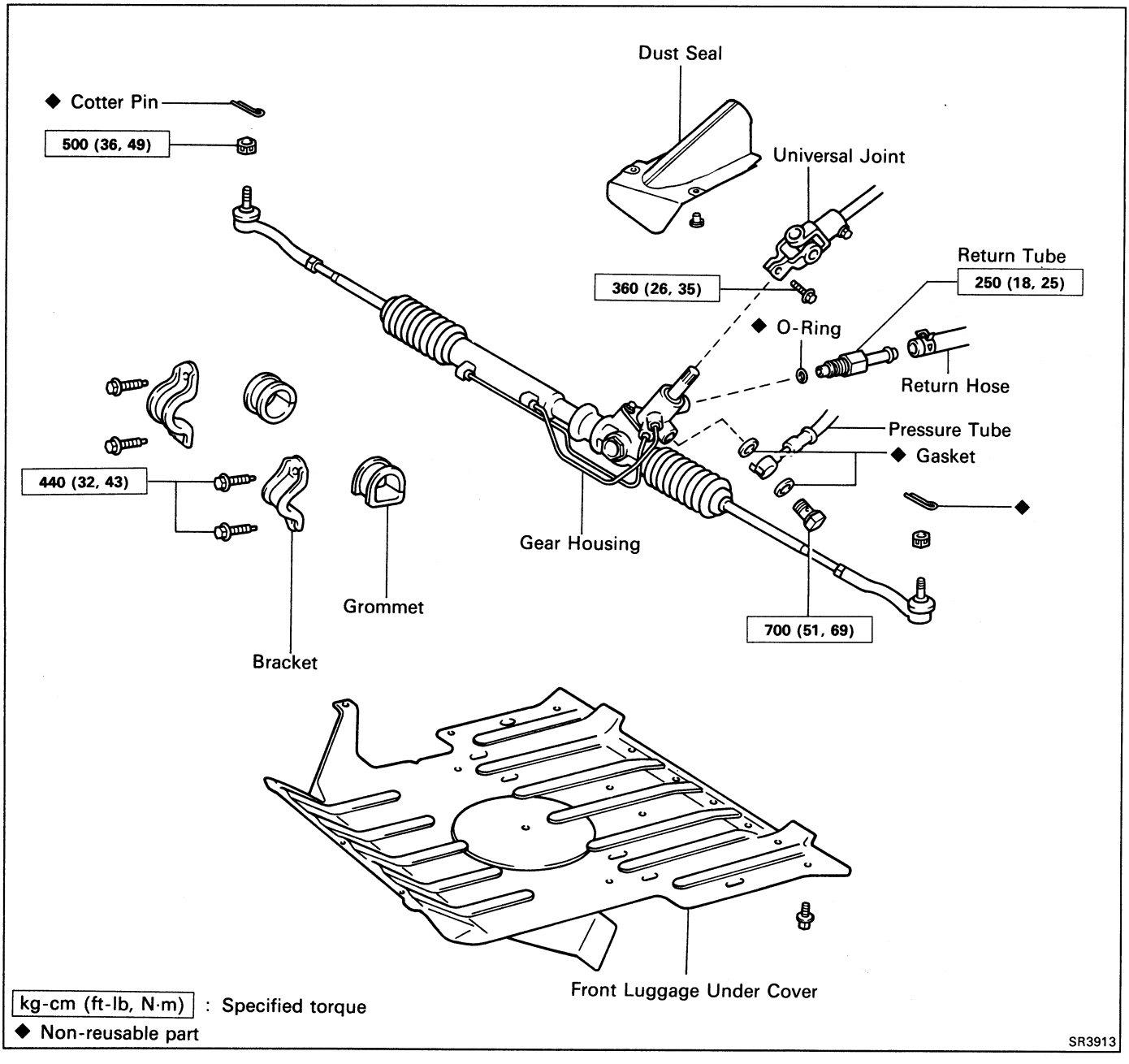

(MAIN POINTS OF REMOVAL AND INSTALLATION)

NOTICE: When disconnecting the universal joint during removal of the gear housing, remove the steering wheel and perform centering of the spiral cable. (See page AB-15)

If the operation is performed without removing the steering wheel, use the procedure below to make sure the steering wheel is firmly fixed in position and cannot turn.

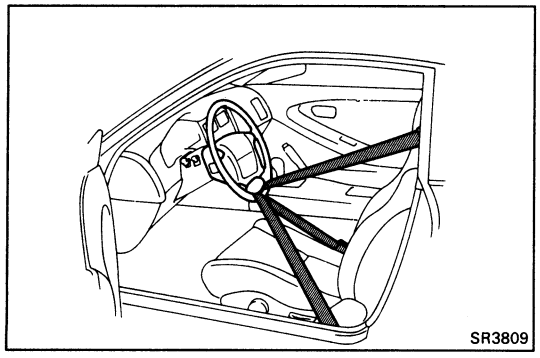

1. DISCONNECT UNIVERSAL JOINT

(a) Position the front wheels facing straight ahead.

(b) Using the seat belt of the driver's seat, fix the steering wheel so that it does not turn.

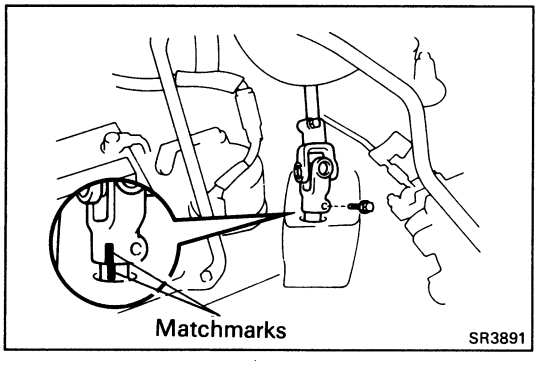

(c) Place matchmarks on the universal joint and control valve shaft.

(d) Loosen the bolt on the upper side of the universal joint, remove the bolt on the lower side and disconnect the universal joint.

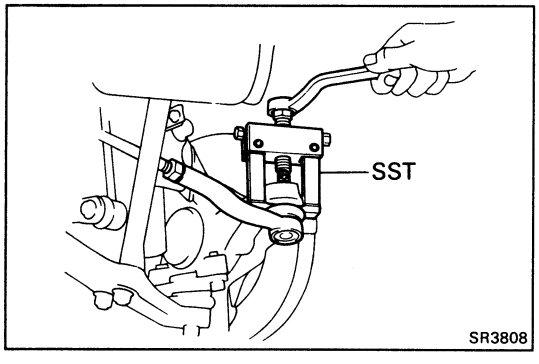

2. DISCONNECT TIE ROD ENDS

(a) Remove the cotter pin and nut.

(b) Using SST, disconnect the tie rod end from the knuckle arm.

SST 09628-62011

3. CONNECT UNIVERSAL JOINT

(a) Set the gear housing so that it matches the dimensions shown below, with the gear housing at the center point.

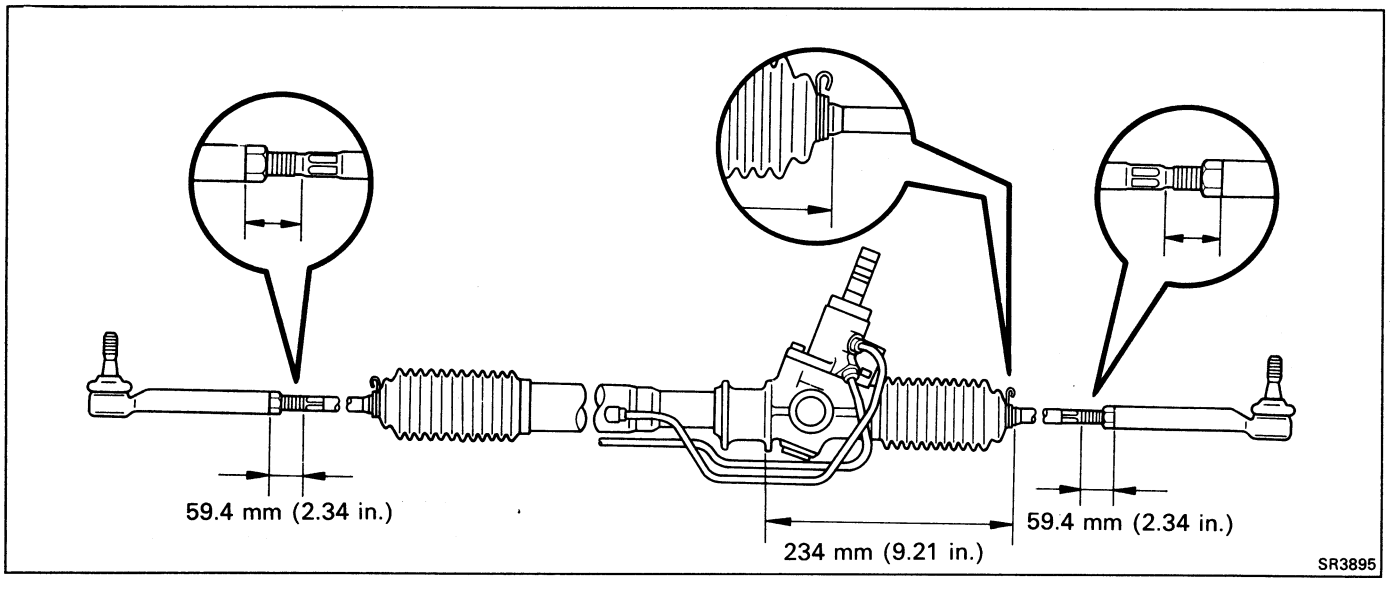

HINT: The dimension of the tie rod end is a reference value, so always adjust the toe-in before tightening the lock nut.

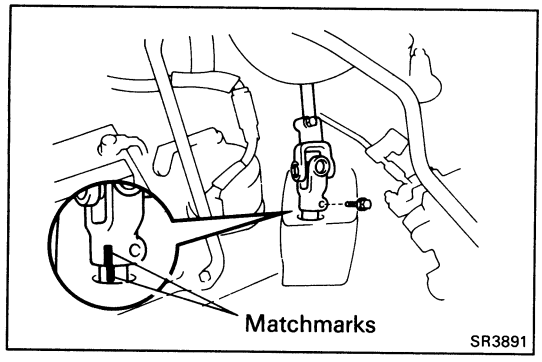

(b) Align matchmarks on the universal joint and control valve shaft and connect them.

4. **CENTER SPIRAL CABLE**

If the steering wheel has been removed, or the steering wheel may have moved during the operation, always perform centering of the spiral cable.
(See page AB-16)

5. **CHECK STEERING WHEEL CENTER POINT**

6. **CHECK TOE-IN**
(See page SA-4)

COMPONENTS

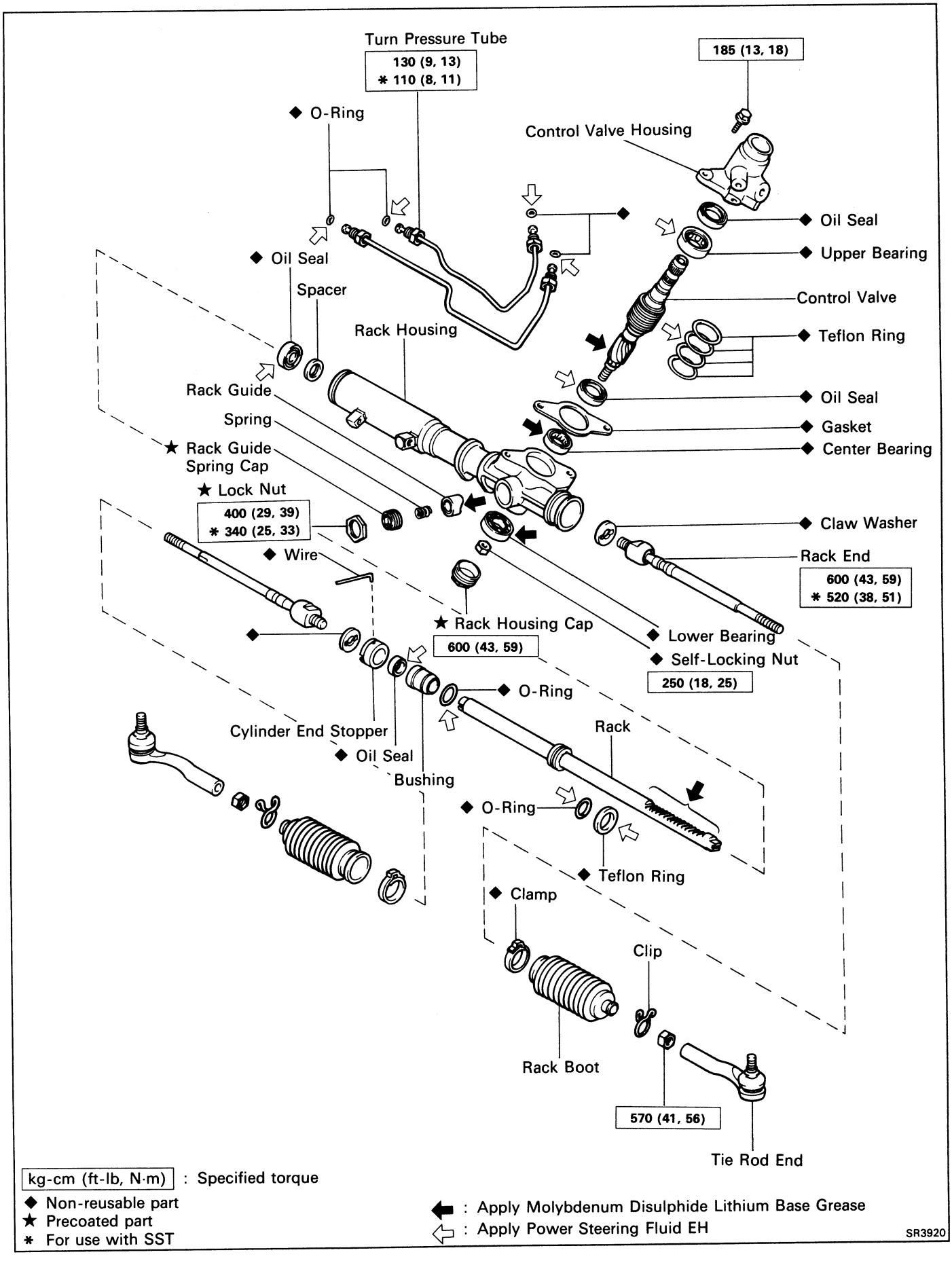
Turn Pressure Tube
130 (9, 13)
* 110 (8, 11)
185 (13, 18)
◆ O-Ring
Control Valve Housing
◆ Oil Seal
◆ Upper Bearing
◆ Oil Seal
Spacer
Control Valve
Rack Housing
◆ Teflon Ring
Rack Guide
◆ Oil Seal
Spring
◆ Gasket
★ Rack Guide Spring Cap
◆ Center Bearing
★ Lock Nut
400 (29, 39)
* 340 (25, 33)
◆ Claw Washer
◆ Wire
Rack End
600 (43, 59)
* 520 (38, 51)
★ Rack Housing Cap
600 (43, 59)
◆ Lower Bearing
◆ Self-Locking Nut
250 (18, 25)
◆ O-Ring
Cylinder End Stopper
Rack
◆ Oil Seal
Bushing
◆ O-Ring
◆ Teflon Ring
◆ Clamp
Clip
Rack Boot
570 (41, 56)
Tie Rod End
kg-cm (ft-lb, N·m) : Specified torque
◆ Non-reusable part
★ Precoated part
* For use with SST
: Apply Molybdenum Disulphide Lithium Base Grease
: Apply Power Steering Fluid EH
SR3920

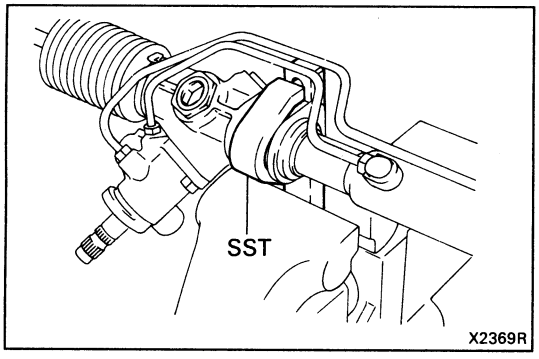

DISASSEMBLY OF GEAR HOUSING

1. CLAMP GEAR HOUSING IN VISE

Using SST, secure the steering gear housing in a vise.

SST 09612-00012

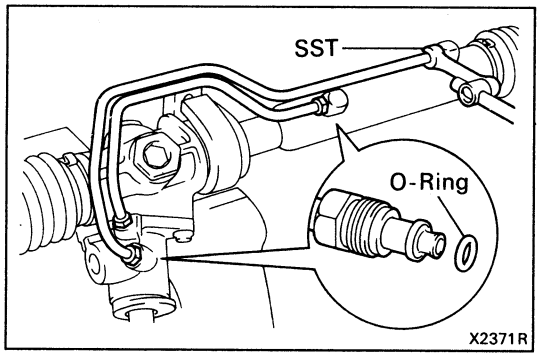

2. REMOVE RIGHT AND LEFT TURN PRESSURE TUBES

(a) Using SST, remove the pressure tubes.

SST 09633-00020

(b) Remove the O-rings from the tubes.

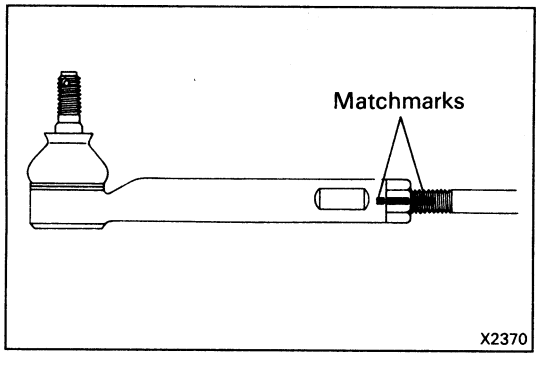

3. REMOVE TIE ROD ENDS

(a) Loosen the lock nuts and place matchmarks on the tie rod ends and rack ends.

(b) Remove the tie rod ends and lock nuts.

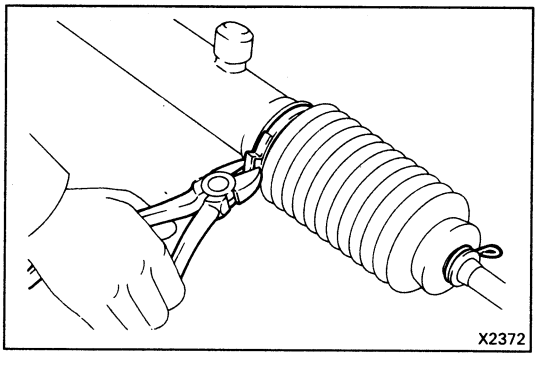

4. REMOVE RACK BOOTS

(a) Remove the clips and clamps.

(b) Remove the rack boots.

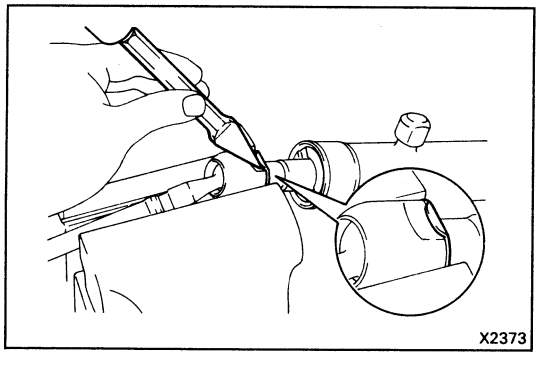

5. REMOVE RACK ENDS AND CLAW WASHERS

(a) Unstake the claw washers.

NOTICE: Avoid any impact to the rack.

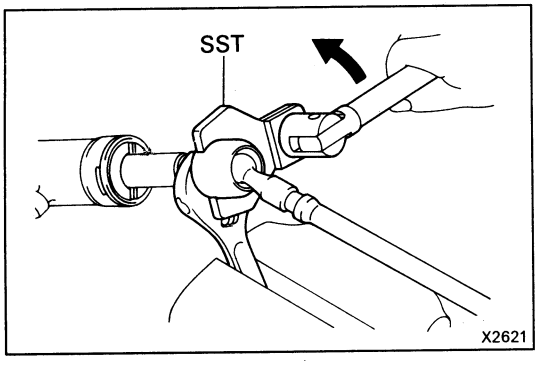

(b) Using SST, remove the rack ends.
SST 09617-10020
(c) Mark the left and right rack ends accordingly.
(d) Remove the claw washers.

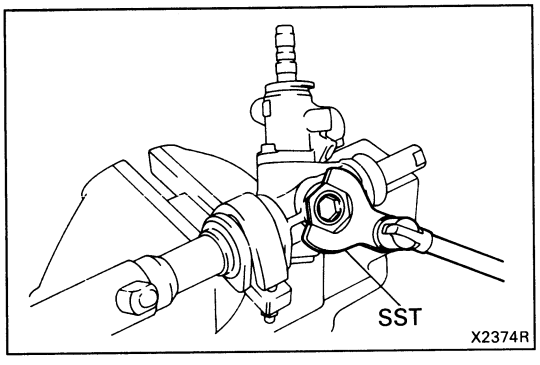

6. REMOVE RACK GUIDE SPRING CAP LOCK NUT

Using SST, remove the rack guide spring cap lock nut.
SST 09612-24014 (09617-22030)

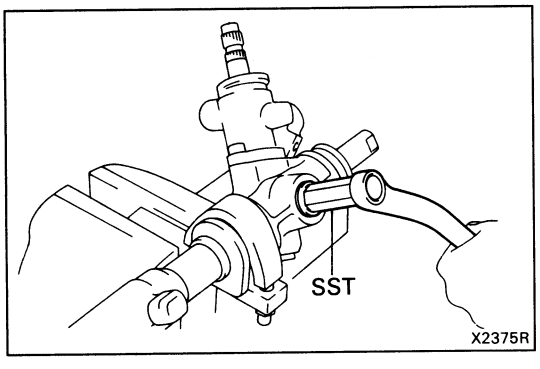

7. REMOVE RACK GUIDE SPRING CAP

Using SST, remove the rack guide spring cap.
SST 09612-10131

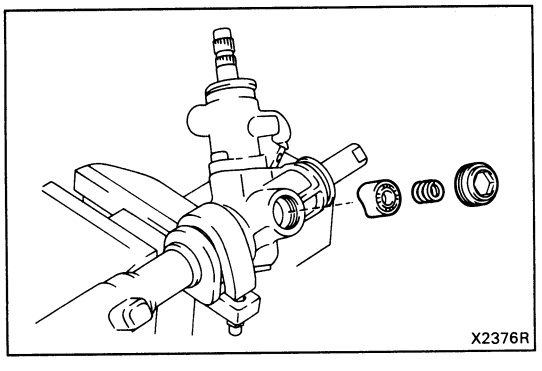

8. REMOVE RACK GUIDE SPRING AND RACK GUIDE

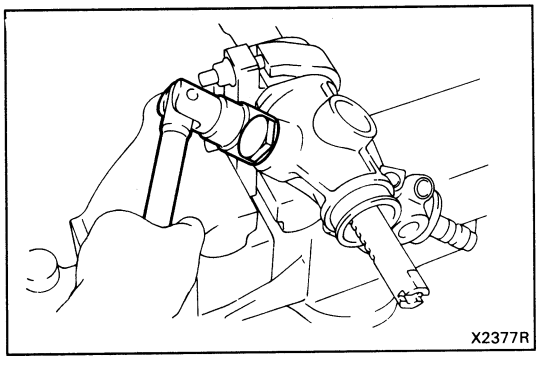

9. REMOVE RACK HOUSING CAP

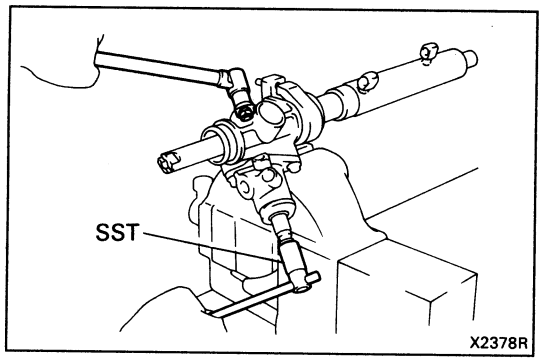

10. REMOVE SELF-LOCKING NUT

Using SST to hold the control valve, remove the self-locking nut.

SST 09616-00010

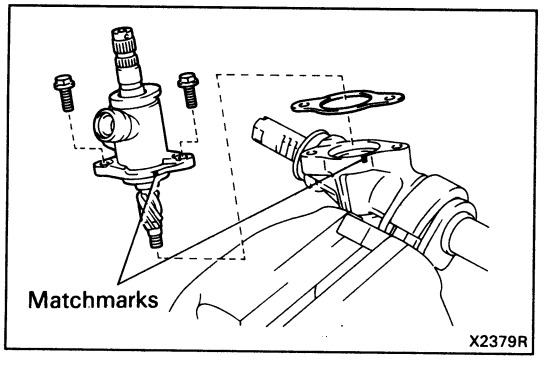

11. REMOVE CONTROL VALVE HOUSING

(a) Place matchmarks on the valve housing and rack housing.

(b) Remove the two bolts.

(c) Pull out the valve housing with the control valve.

(d) Remove the gasket.

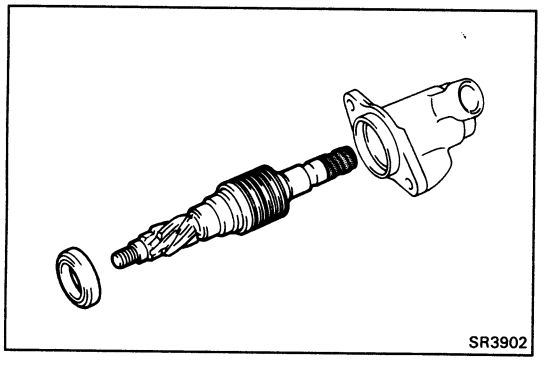

12. REMOVE CONTROL VALVE FROM HOUSING

(a) Tap out the control valve with the oil seal.

(b) Remove the oil seal from the control valve.

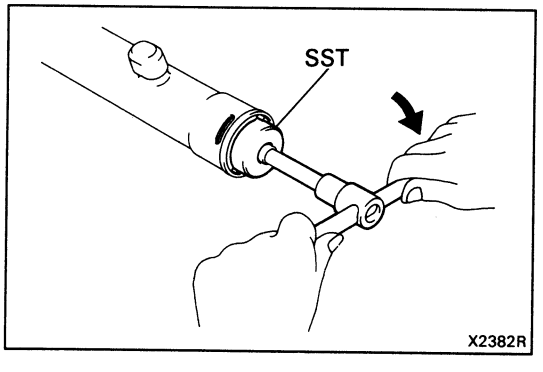

13. REMOVE CYLINDER END STOPPER WIRE

(a) Using SST, turn the cylinder end stopper clockwise until the wire end comes out.

SST 09631-10021

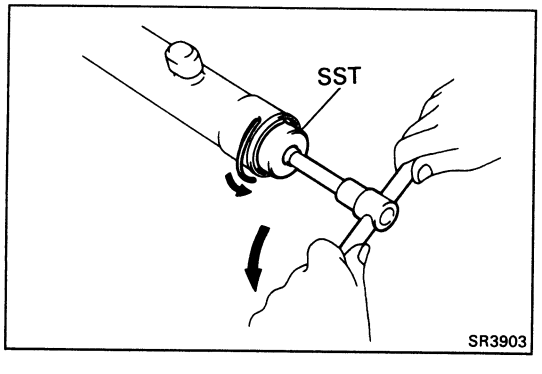

(b) Using SST, turn the cylinder end stopper counter-clockwise, and remove the wire.

SST 09631-10021

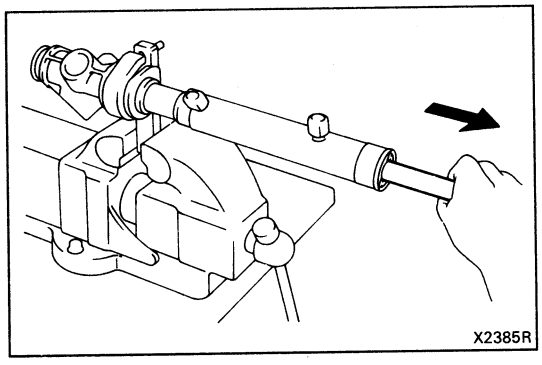

14. REMOVE STEERING RACK

(a) Pull out the steering rack.

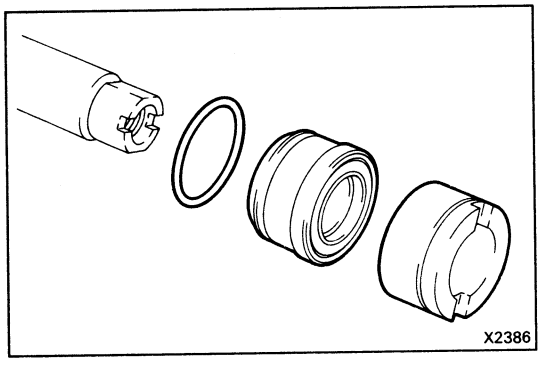

(b) Remove the cylinder end stopper and rack bushing from the rack.

(c) Remove the O-ring from the bushing.

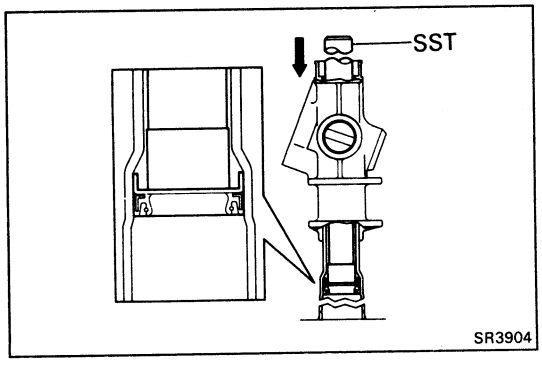

15. REMOVE RACK HOUSING OIL SEAL AND SPACER

Using SST, drive out the spacer and oil seal.

SST 09631-12020

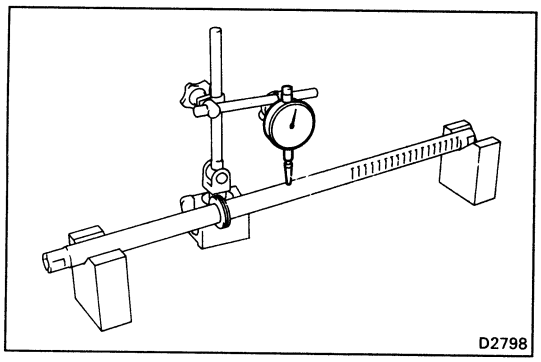

INSPECTION AND REPAIR OF GEAR HOUSING COMPONENTS

NOTICE: When coating the gear housing components with power steering fluid, use TOYOTA POWER STEERING FLUID EH or equivalent which is exclusively for EHPS use.

1. **INSPECT RACK**

(a) Check the rack for runout and for tooth wear or damage.

Maximum runout: 0.3 mm (0.012 in.)

(b) Check the back surface for wear or damage.

If faulty, replace it.

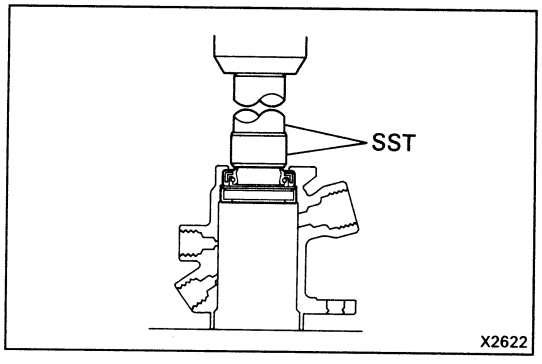

2. **IF NECESSARY, REPLACE CONTROL VALVE HOUSING OIL SEAL AND UPPER BEARING**

(a) Using SST, press out the oil seal with the bearing.

SST 09620-30010 (09631-00020) and 09630-24013 (09620-24010)

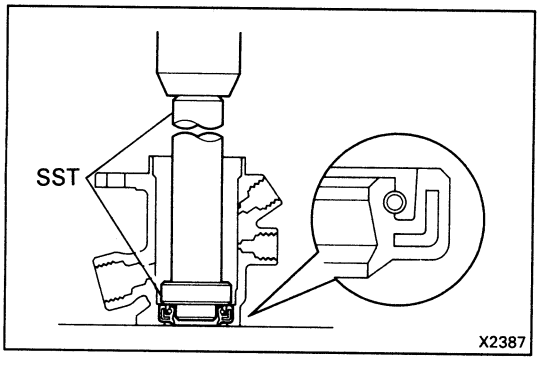

(b) Using SST, press in a new oil seal.

SST 09620-30010 (09631-00020) and 09630-24013 (09620-24020)

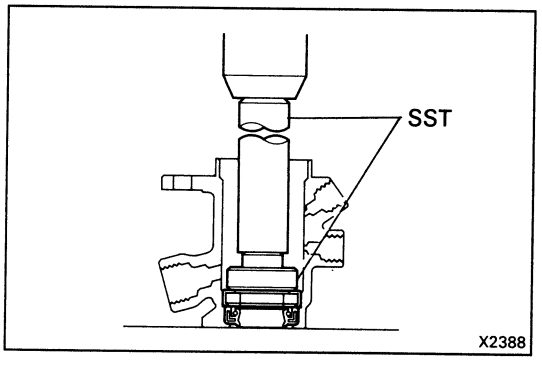

(c) Using SST, press in a new bearing.

SST 09620-30010 (09631-00020) and 09630-24013 (09620-24020)

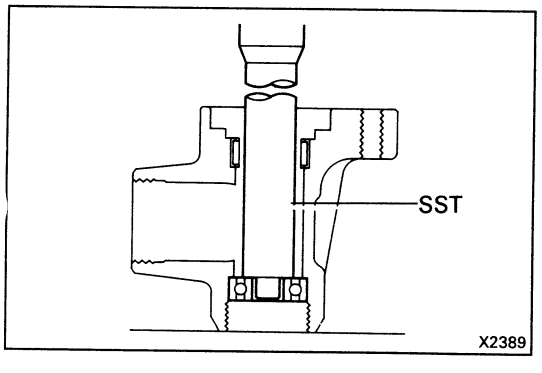

3. **IF NECESSARY, REPLACE CONTROL VALVE LOWER BEARING AND CENTER BEARING**

(a) Using SST, press out the lower bearing.

SST 09620-30010 (09631-00020)

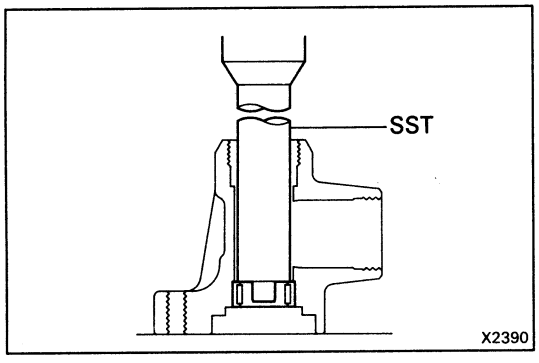

(b) Using SST, press out the center bearing.
SST 09631-12020

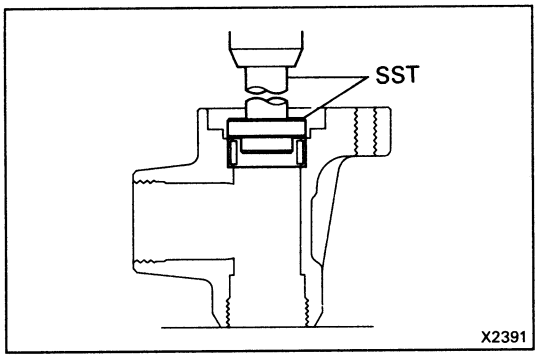

(c) Using SST, press in a new center bearing.
SST 09620-30010 (09631-00020) and
09630-24013 (09620-24020)

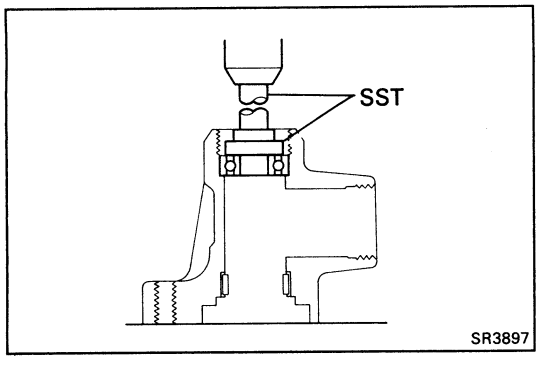

(d) Using SST, press in a new lower bearing.
SST 09620-30010 (09631-00020) and
09631-20031

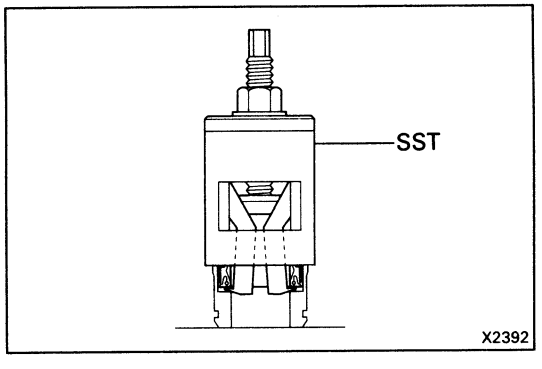

4. IF NECESSARY, REPLACE RACK BUSHING OIL SEAL

(a) Using SST, remove the oil seal.
SST 09612-24014 (09613-22011)

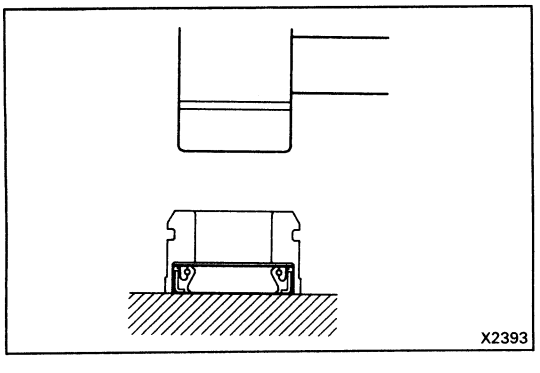

(b) Using a plastic hammer, tap in a new oil seal as shown.

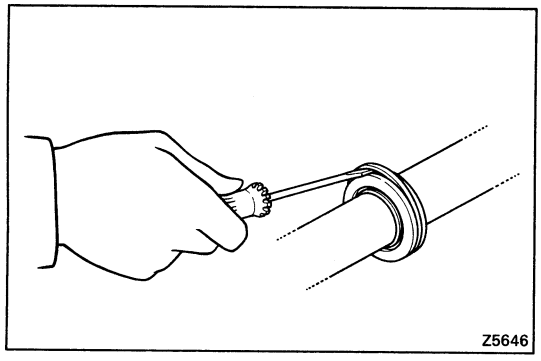

5. IF NECESSARY, REPLACE STEERING RACK TEFLON RING AND O-RING

(a) Remove the teflon ring and O-ring.

NOTICE: Be careful not to damage the steering rack.

(b) Coat a new O-ring with power steering fluid and install it.

(c) Expand a new teflon ring with your fingers.

NOTICE: Be careful not to over-expand the teflon ring.

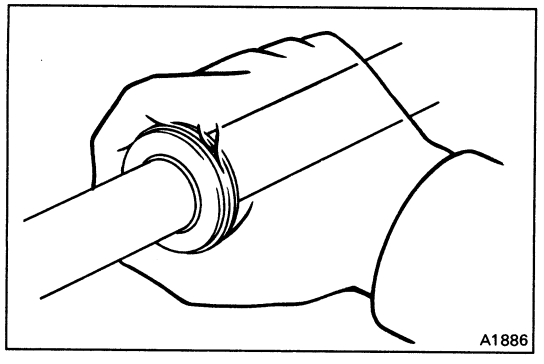

(d) Install the new teflon ring to the steering rack.

(e) Coat the teflon ring with power steering fluid and snug it down with your fingers.

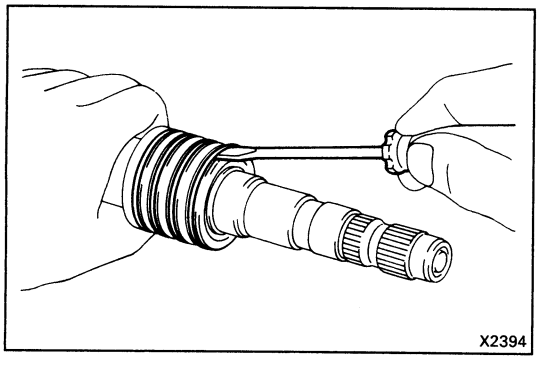

6. IF NECESSARY, REPLACE CONTROL VALVE TEFLON RINGS

(a) Using a screwdriver, remove the teflon rings.

NOTICE: Be careful not to damage the control valve.

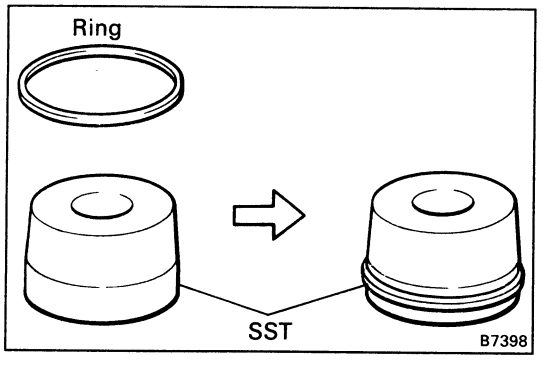

(b) Install new teflon rings to SST and expand them.

SST 09631-20070

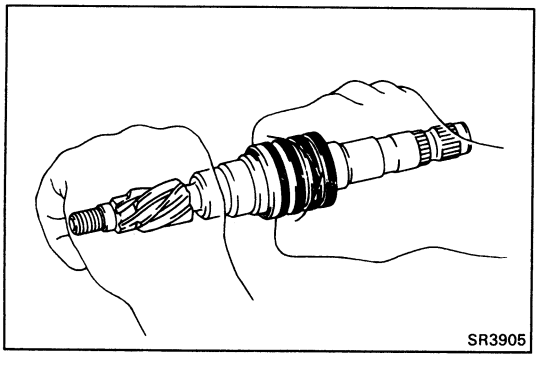

(c) Install the expanded teflon rings to the control valve and snug them with your fingers.

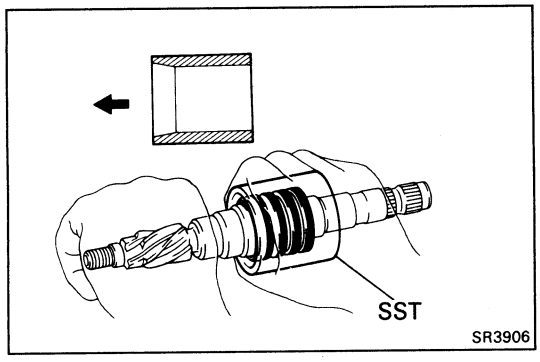

(d) Coat the teflon rings with power steering fluid, and carefully slide the tapered end of SST over the teflon rings to seat the rings.

SST 09631-20081

ASSEMBLY OF GEAR HOUSING

(See page SR-38)

NOTICE: When coating the gear housing components with power steering fluid, use TOYOTA POWER STEERING FLUID EH or equivalent which is exclusively for EHPS use.

1. **COAT WITH POWER STEERING FLUID OR MOLYBDENUM DISULPHIDE LITHIUM BASE GREASE**
(See page SR-38)

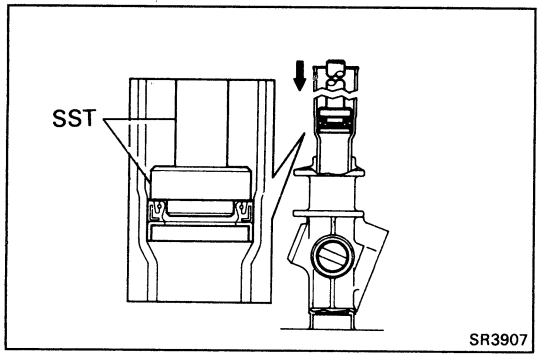

2. **INSTALL RACK HOUSING OIL SEAL AND SPACER**
   (a) Install the spacer into the rack housing.
   (b) Using SST, drive in a new oil seal.
   SST 09630-24013 (09620-24030), 09631-12020

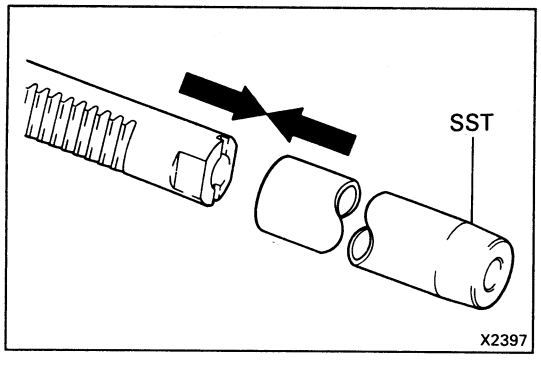

3. **INSTALL RACK**
   (a) Install SST to the rack.
   HINT: If necessary, scrape the burrs off the rack teeth end and burnish.
   SST 09631-10040

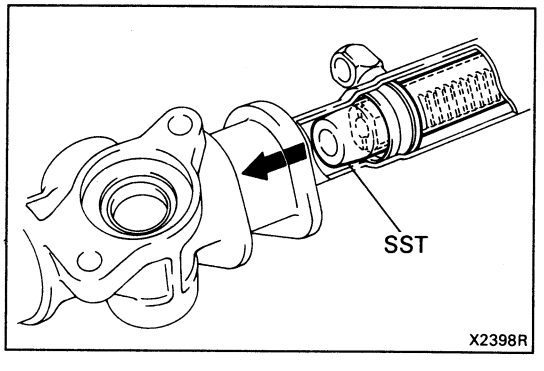

   (b) Coat SST with power steering fluid.
   (c) Insert the rack into the cylinder.
   (d) Remove SST.

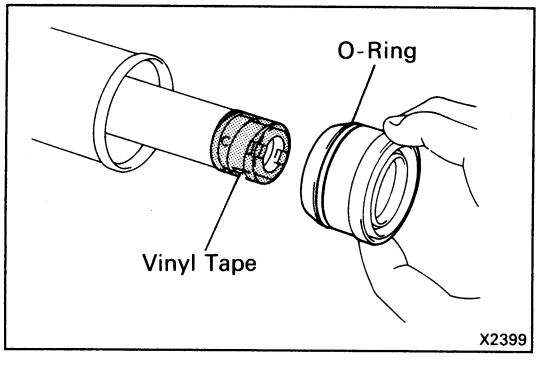

4. **INSTALL RACK BUSHING**
   (a) Coat a new O-ring with power steering fluid and install it to the bushing.
   (b) To prevent oil seal lip damage, wind vinyl tape on the steering rack end, and apply power steering fluid.
   (c) Install the bushing by pushing it into the cylinder in the direction shown in drawing, without tilting.

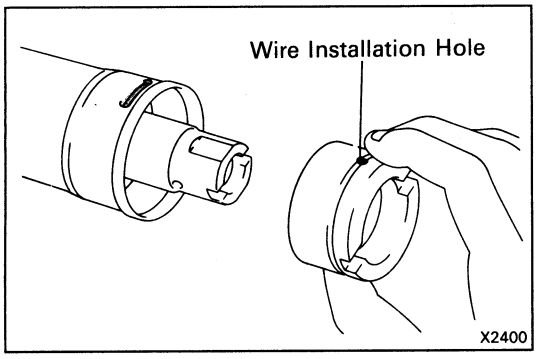

5. INSTALL CYLINDER END STOPPER

(a) Push in the cylinder end stopper until the wire installation hole appears.

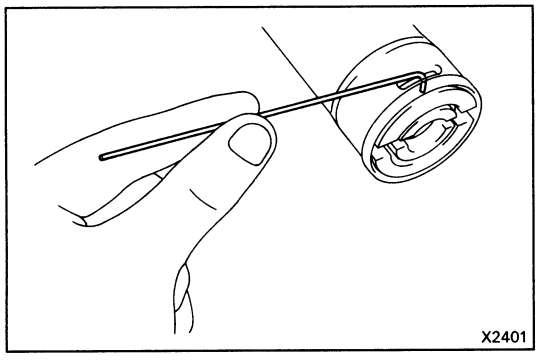

(b) Insert a new wire end into the hole.

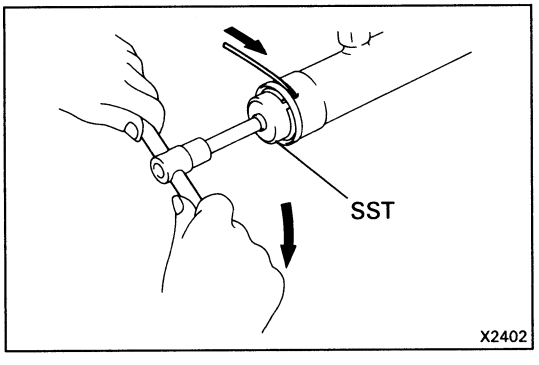

(c) Using SST, turn the cylinder end stopper clockwise until the wire end disappears.

SST 09631-10021

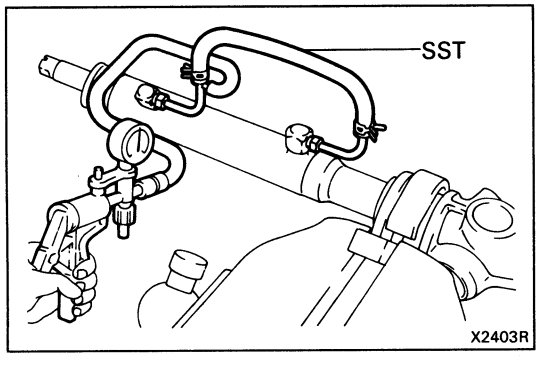

6. AIR TIGHTNESS TEST

(a) Install SST to the unions of the cylinder housing.

SST 09631-12071

(b) Apply 400 mmHg (15.75 in.Hg, 53.3 kPa) of vacuum for about 30 seconds.

(c) Check that there is no change in the vacuum.

If there is change in the vacuum, check the installation of the rack housing oil seals.

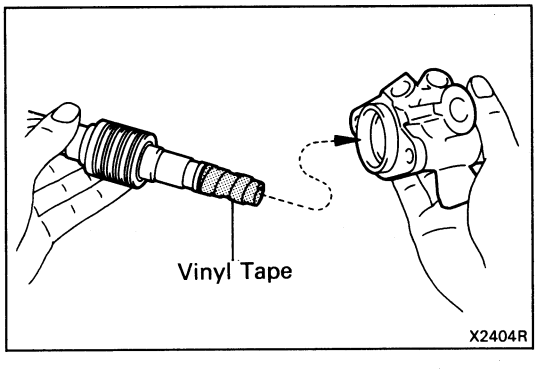

7. INSTALL CONTROL VALVE

(a) Coat the teflon rings with power steering fluid.

(b) Install the control valve into the housing.

NOTICE: To prevent oil seal damage, wind vinyl tape on the serration part of the control valve shaft.

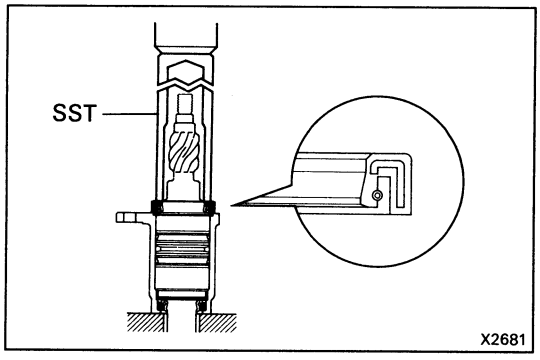

8. INSTALL OIL SEAL

(a) Coat a new oil seal with power steering fluid.

(b) Using SST, install the oil seal as shown.

SST 09612-22011

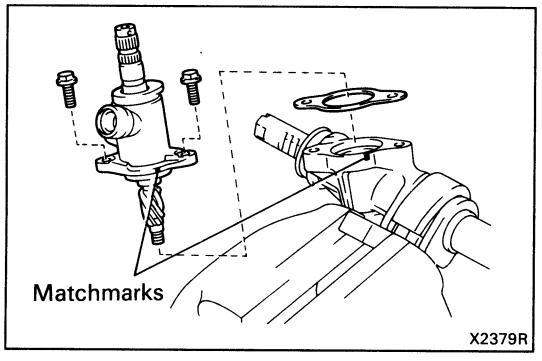

9. INSTALL CONTROL VALVE HOUSING

(a) Place a new gasket on the rack housing.

(b) Align the matchmarks on the valve housing and rack housing.

(c) Torque the two bolts.

Torque: 185 kg-cm (13 ft-lb, 18 N·m)

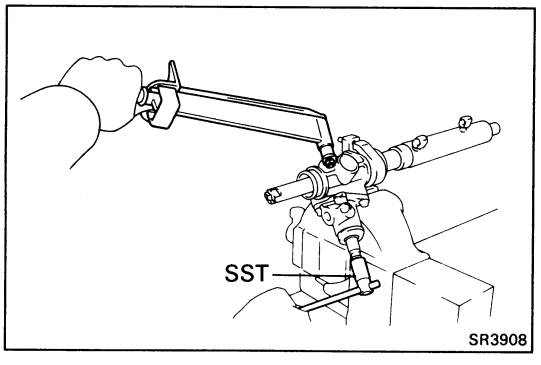

10. INSTALL SELF-LOCKING NUT

Using SST to hold the control valve, install a new self-locking nut.

SST 09616-00010

Torque: 250 kg-cm (18 ft-lb, 25 N·m)

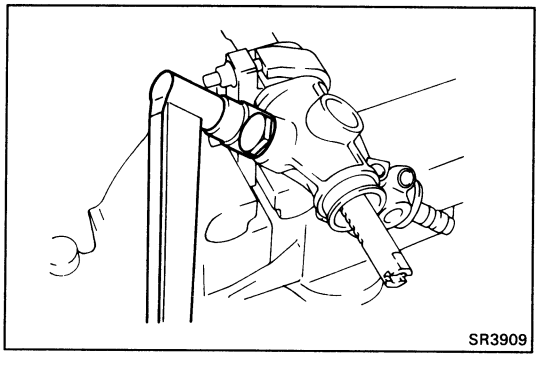

11. INSTALL RACK HOUSING CAP

(a) Apply sealant to 2 or 3 threads of the housing cap.

Sealant: Part No. 08833-00080, THREE BOND 1344, LOCTITE 242 or equivalent

(b) Install the rack housing cap.

Torque: 600 kg-cm (43 ft-lb, 59 N·m)

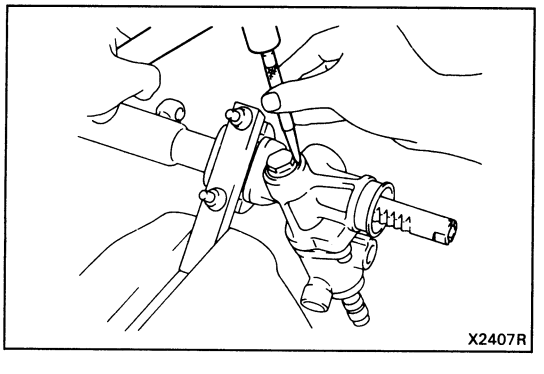

(c) Using a centering punch, stake the cap at two places.

12. INSTALL RACK GUIDE AND RACK GUIDE SPRING

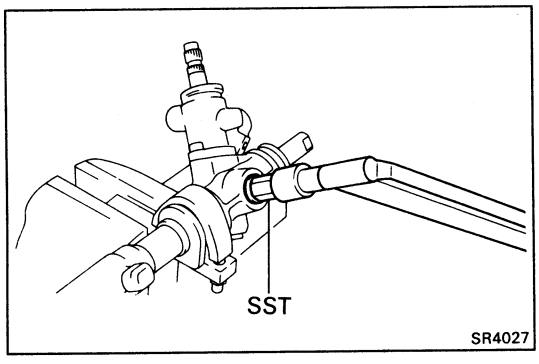

13. ADJUST TOTAL PRELOAD

(a) Apply sealant to 2 or 3 threads of the rack guide spring cap.

Sealant: Part No. 08833-00080, THREE BOND 1344, LOCTITE 242 or equivalent

(b) Using SST, install and torque the spring cap.

SST 09612-10131

Torque: 250 kg-cm (18 ft-lb, 25 N·m)

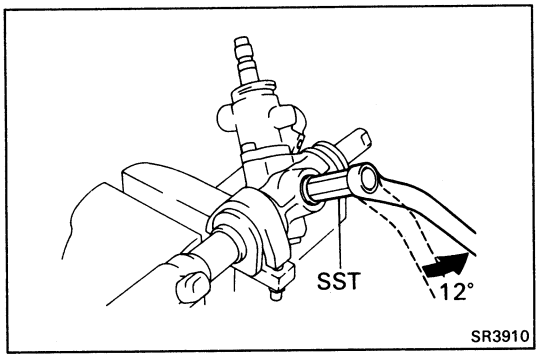

(c) Using SST, return the rack guide spring cap 12°.

SST 09612-10131

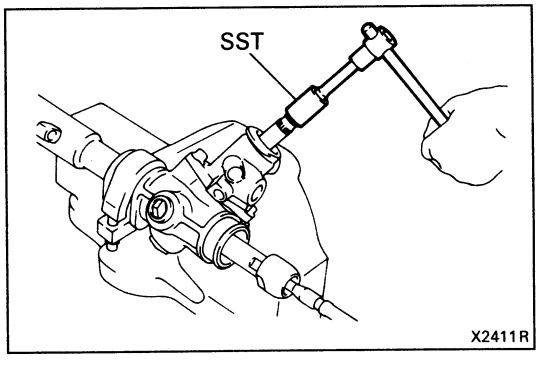

(d) Turn the control valve shaft right and left one or two times.

SST 09616-00010

NOTICE: If the rack overstrokes, the oil seal will be damaged by the teeth of the rack, so temporarily install the rack end so that it does not overstroke.

(e) Loosen the spring cap until the rack guide compression spring is not functioning.

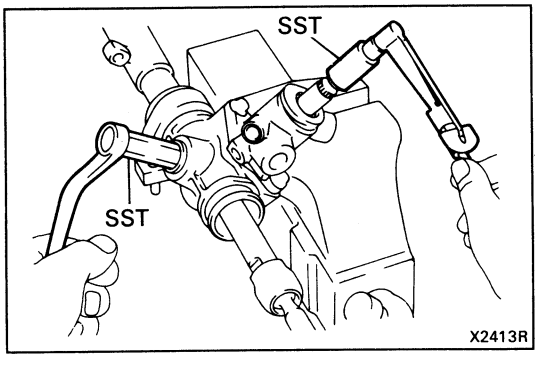

(f) Using SST and a torque meter, tighten the rack guide spring cap until the preload is within specification.

SST 09612-10131 and 09616-00010

Preload (turning): 9 – 13 kg-cm (7.8 – 11.3 in.-lb, 0.9 – 1.3 N·m)

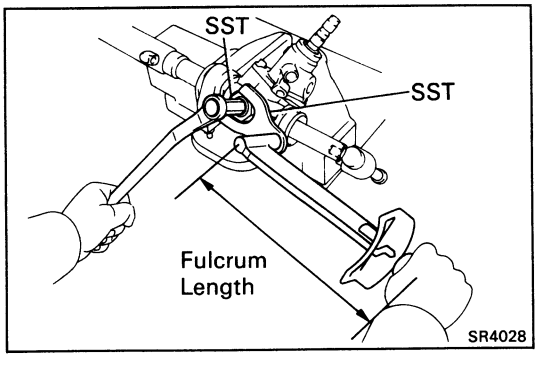

14. INSTALL RACK GUIDE SPRING CAP LOCK NUT

(a) Apply sealant to 2 or 3 threads of the lock nut.

Sealant: Part No. 08833-00080, THREE BOND 1344, LOCTITE 242 or equivalent

(b) Using SST, install and torque the lock nut.

SST 09612-10131 and 09612-24014 (09617-22030)

Torque: 340 kg-cm (25 ft-lb, 33 N·m)

HINT: Use a torque wrench with a fulcrum length of 340 mm (13.39 in.).

(c) Recheck the total preload.

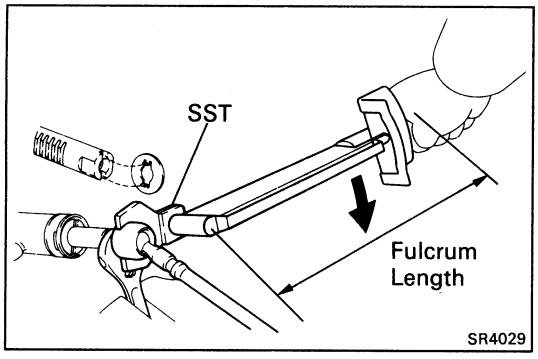

15. INSTALL CLAW WASHERS AND RACK ENDS

(a) Install new claw washers.

HINT: Align the claws of the claw washer with the rack grooves.

(b) Using SST, install and torque the rack ends.

SST 09617-10020

Torque: 520 kg-cm (38 ft-lb, 51 N·m)

HINT: Use a torque wrench with a fulcrum length of 340 mm (13.39 in.).

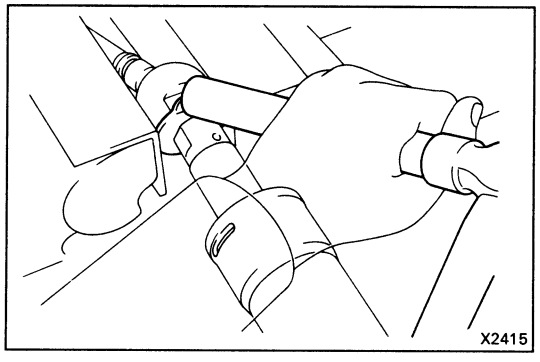

(c) Using a brass bar and hammer, stake the claw washers.

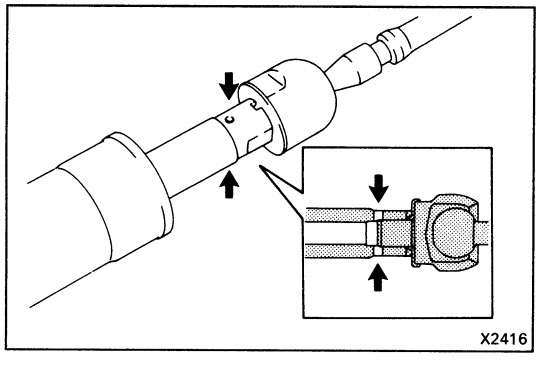

16. INSTALL RACK BOOTS, CLAMPS AND CLIPS

(a) Insure that the rack hole is not clogged with grease.

HINT: If the rack hole is clogged, the pressure inside the boot will change after it is assembled and the steering wheel turned.

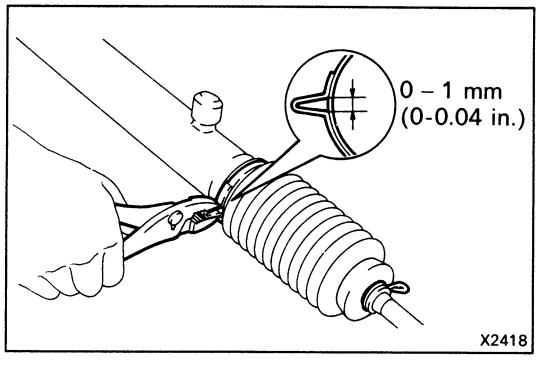

(b) Install the boots.

NOTICE: Be careful not to damage or twist the boots.

(c) Install new clamps.

(d) Install the clips with the ends facing outward.

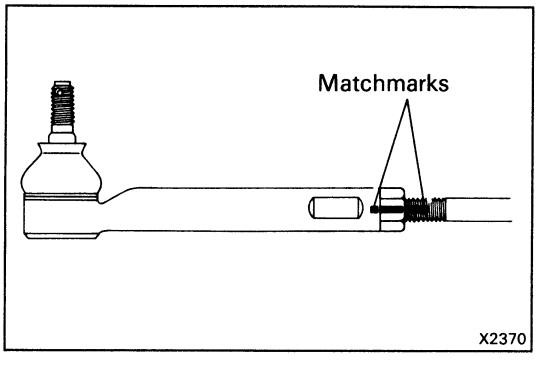

17. INSTALL TIE ROD ENDS

(a) Screw the lock nuts and tie rod ends onto the rack ends until the matchmarks are aligned.

(b) After adjusting toe-in, torque the lock nuts.

Torque: 570 kg-cm (41 ft-lb, 56 N·m)

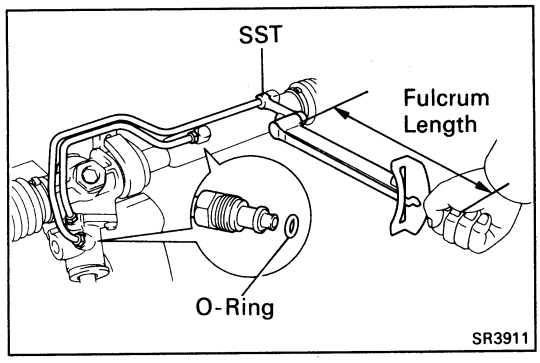

18. INSTALL RIGHT AND LEFT TURN PRESSURE TUBES

(a) Install four new O-rings to the tubes.

(b) Using SST, install the tubes.

SST 09633-00020

Torque: 110 kg-cm (8 ft-lb, 11 N·m)

HINT: Use a torque wrench with a fulcrum length of 300 mm (11.81 in.).

Electronic Control System

PRECAUTION

Do not open the cover or the case of the ECU and various computers unless absolutely necessary. (If the IC terminals are touched, the IC may be destroyed by static electricity.)

LOCATION OF COMPONENTS

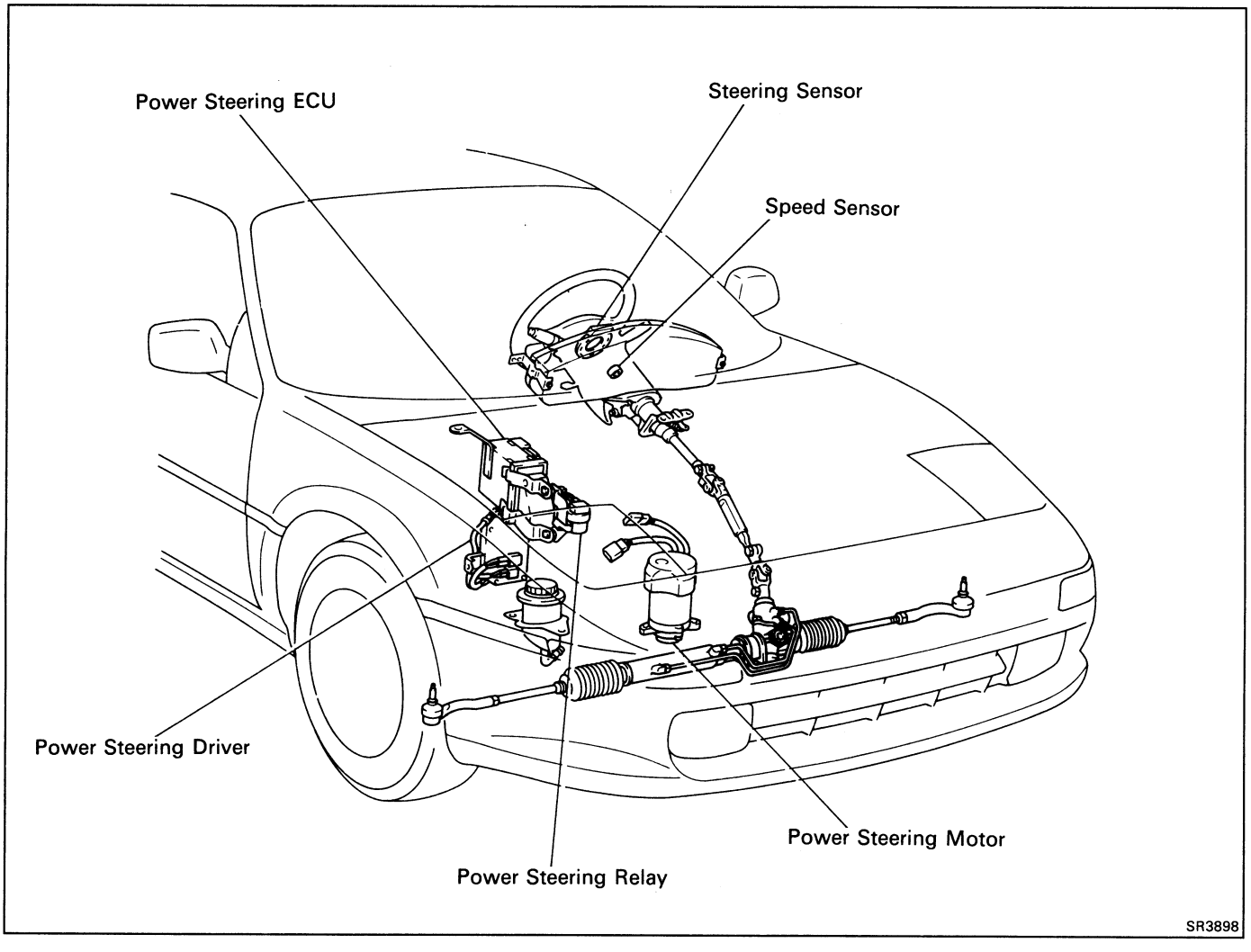

WIRING DIAGRAM

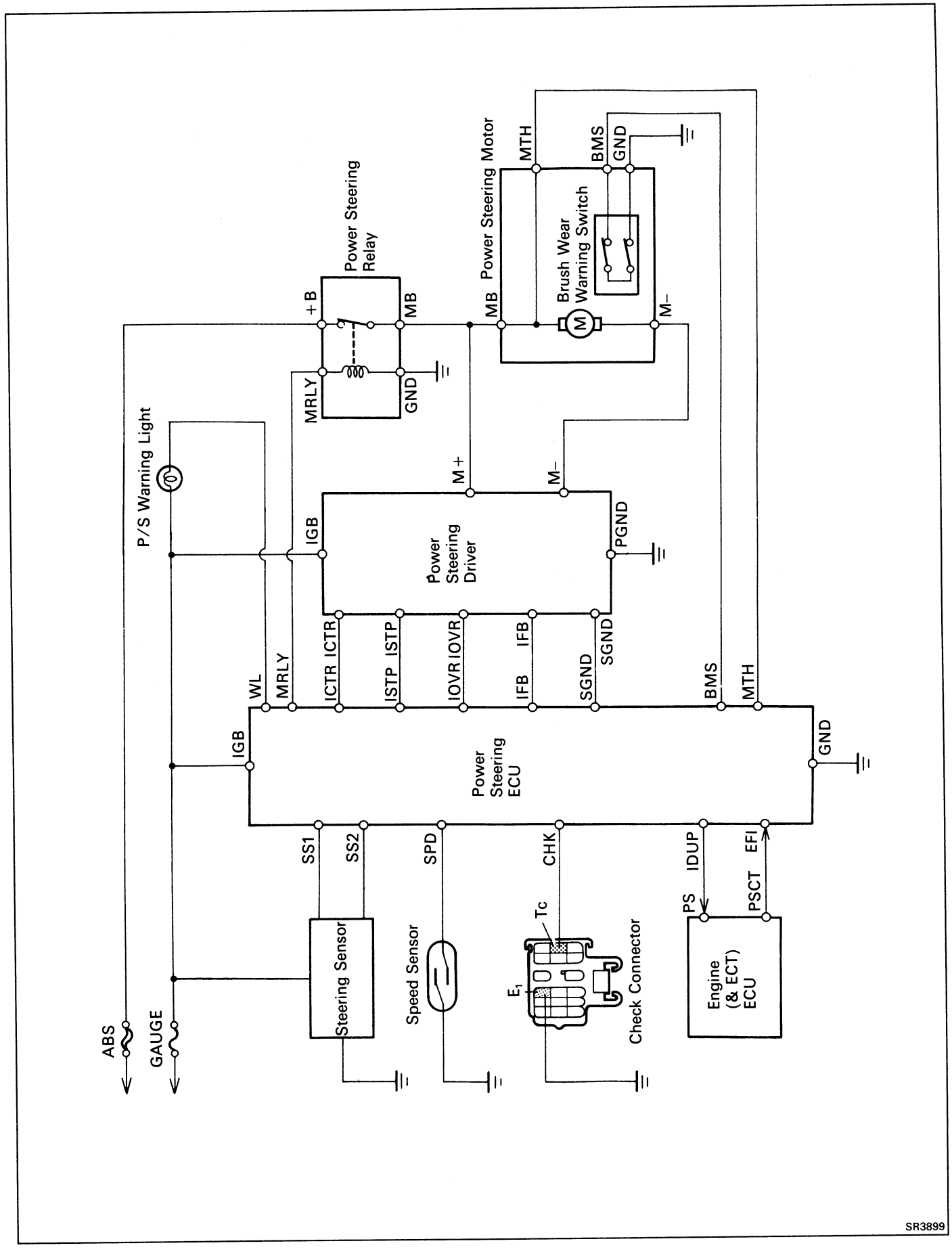

Diagnosis System

DESCRIPTION

When a malfunction exists, the corresponding code number is stored in memory until the ignition switch is turned off.

In case of a malfunction other than one identified by code No. 21, the P/S warning light is turned on to warn the driver.

By connecting terminals Tc and E_1 of the check connector, malfunction codes that are stored in memory can be displayed by the way the light blinks.

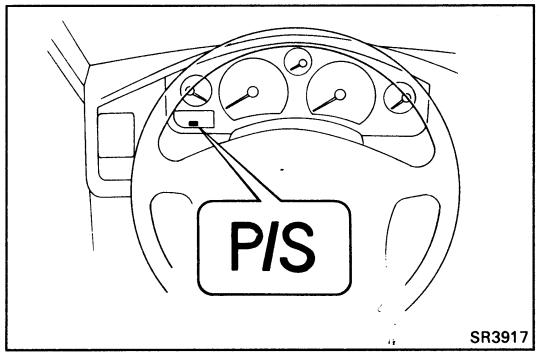

P/S WARNING LIGHT CHECK

(a) Turn the ignition switch to ON and check that the P/S warning light lights up.

(b) Check that the P/S warning light goes out after approx. 2 seconds.

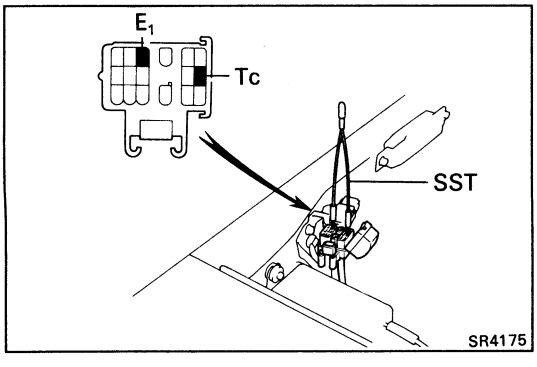

STEERING SENSOR CHECK

(a) Turn the ignition switch to ON.

(b) Using SST, connect terminals Tc and E_1 of the check connector.

SST 09843-18020

NOTICE: Never make a mistake with the terminal connection position as this will cause a malfunction.

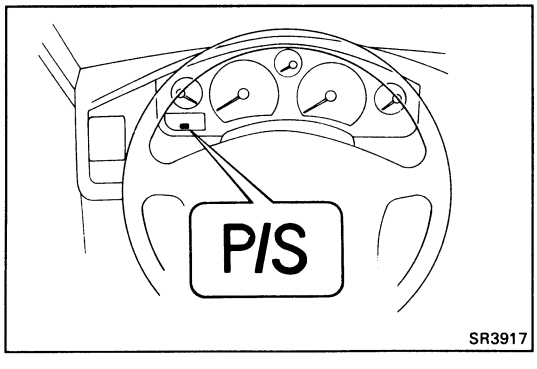

(c) Check that the warning light condition changes according to the steering angle and the vehicle speed, as shown below.

Vehicle Speed / Steering Angle	Below 20 km/h (12 mph)	Above 20 km/h (12 mph)
Less than 36 degrees	BLINK	ON
More than 36 degrees	OFF	OFF

HINT:

- The steering angle is defined as 0° at the steering position at which the ignition switch and terminals Tc and E_1 are turned on simultaneously.
- This check is not performed when a diagnostic code has been stored in memory.

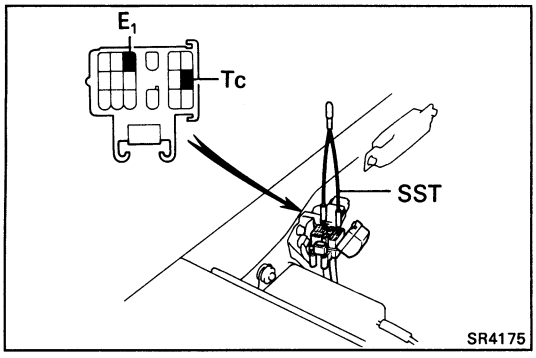

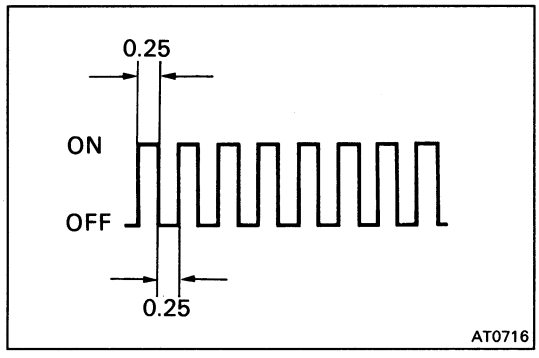

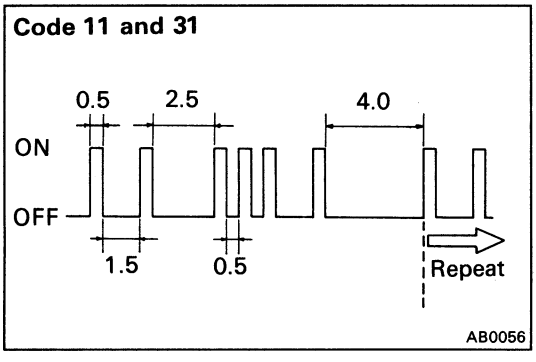

DIAGNOSTIC CODE CHECK

1. OUTPUT DIAGNOSTIC CODE

(a) Turn the ignition switch to ON.

(b) Using SST, connect terminals Tc and E_1 of the check connector.

SST 09843-18020

NOTICE: Never make a mistake with the terminal connection position as this will cause a malfunction.

2. READ DIAGNOSTIC CODE

Read the diagnostic code as indicated by the number of times the P/S warning light blinks.

- **Normal code indication**

  The light will blink 2 times per second.

- **Malfunction code indication**

  In the event of a malfunction, the light will blink. The first number of the code No. will equal the first digit of a 2-digit diagnostic code, and after a 1.5 second pause, the 2nd number of the code No. will equal the 2nd digit. If there are two or more codes, there will be a 2.5 second pause between each.
  After all the codes have been output, there will be a 4.0 second pause and they will all be repeated.

HINT: In the event of a number of trouble codes, indication will begin from the smaller numbered code to the larger.

DIAGNOSTIC CODES

Code No.	Blink Pattern	Diagnosis	Trouble Area	Warning Light	PS Operation
11	AB0057	No electric current being supplied to power steering motor	● Wire harness and connector between battery and power steering motor ● Wire harness and connector between ECU and power steering motor ● Power steering relay ● Power steering motor ● ECU	ON	Stopped (*1)
12	FI1389	Short-circuit in power steering relay coil circuit	● Wire harness and connector between ECU and power steering relay ● Power steering relay ● ECU	ON	Stopped (*1)
21	FI1609	Power steering motor temperature is abnormally high	● Wire harness and connector between ECU and power steering motor ● Power steering motor ● ECU	OFF	Discontinued (*2)
22	FI1392	Abnormally high current being supplied to power steering motor	● Wire harness and connector between ECU and power steering driver ● Power steering driver ● ECU	ON	Stopped (*1)
31	FI1394	Wearing out of power steering motor brush	● Wire harness and connector between ECU and power steering motor ● Power steering motor ● ECU	ON	Continues

*1: Until fault is fixed and ignition is turned OFF, then ON.
*2: Returns when temp. of PS pump drops.

Inspection of Electronic Control Components

STEERING SENSOR

(a) Connect the positive (+) lead from the battery to terminal ① and the negative (–) lead to terminal ⑤.

(b) Connect the tester as shown in the illustration.

(c) Insert thick card at parts Ⓐ and Ⓑ and measure the resistance between ground and terminal ② or ④ when the light is cut out.

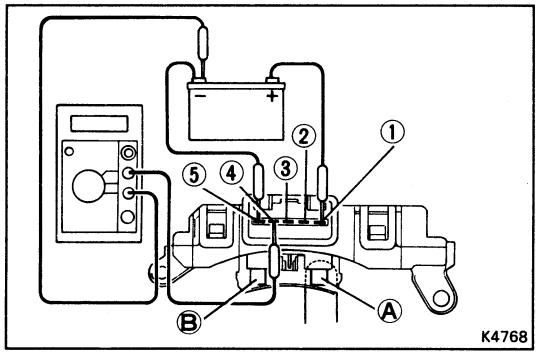

Light Exposure Condition	Terminal ② – Ground	Terminal ④ – Ground
Ⓐ and Ⓑ exposed	Approx. 100 Ω	Approx. 100 Ω
Ⓐ and Ⓑ cut out	∞	∞
Only Ⓐ is cut out	∞	Approx. 100 Ω
Only Ⓑ is cut out	Approx. 100 Ω	∞

SPEED SENSOR

(See page BE-52)

ENGINE (& ECT) ECU

(See page FI-176)

POWER STEERING RELAY

(a) Inspect the relay continuity between terminals as shown.

MRLY	GND	+B	MB
o	o		

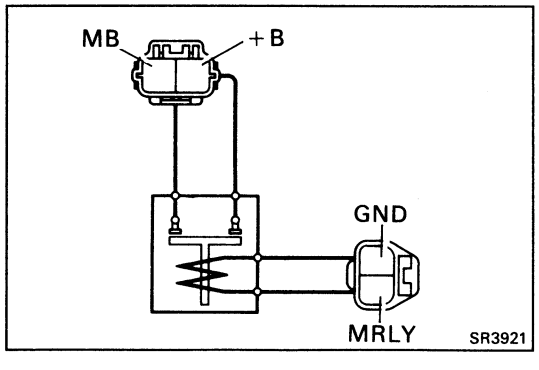

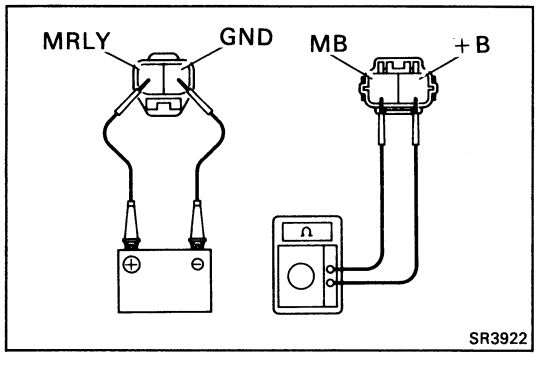

(b) Connect the positive (+) lead from the battery to terminal MRLY and the negative (–) lead to terminal GND.

(c) Check that there is continuity between terminals +B and MB.

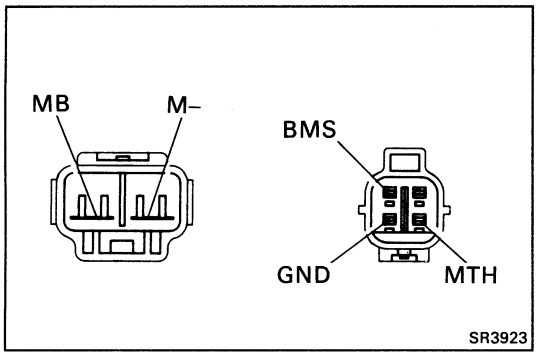

POWER STEERING MOTOR

(a) Inspect the motor continuity between terminals as shown.

Condition \ Terminal	MB	M–	MTH	BMS	GND
Motor brushes installed	○—○—○			○—○	
Motor brushes removed	○—○—○				

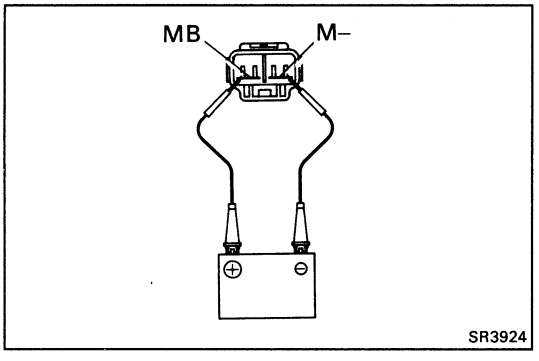

(b) Connect the positive (+) lead from the battery to terminal MB and the negative (–) lead to terminal M–, check that the motor turns.

NOTICE:

- **Be careful about fluid flying about.**
- **Do not run the motor more than is necessary.**

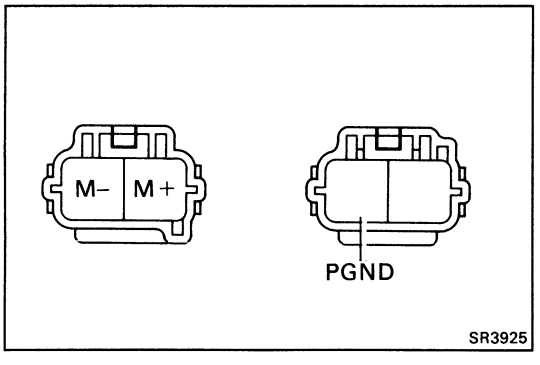

POWER STEERING DRIVER

(a) Inspect continuity between terminals on the driver side connector.

M–	M+	PGND
○—▶—○		

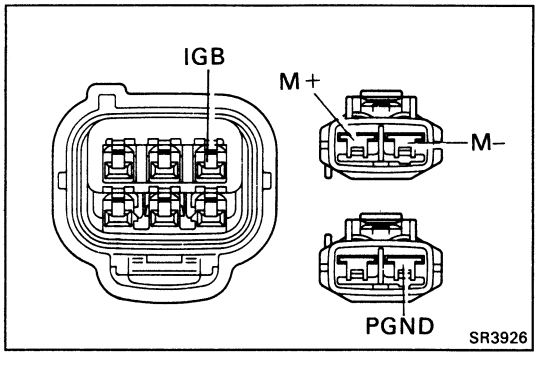

(b) Disconnect the connectors and inspect the connectors on the wire harness side as shown.

Check for	Tester Connection	Condition		Specified Value
Continuity	PGND – Ground	Constant		Continuity
	M+ – M–	Constant		Continuity
Voltage	IGB – Ground	Ignition switch	OFF	0 V
			ON	Battery voltage

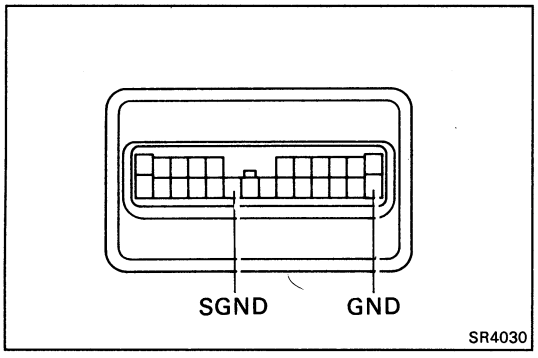

POWER STEERING ECU

(a) Check that there is continuity between terminals GND and SGND.

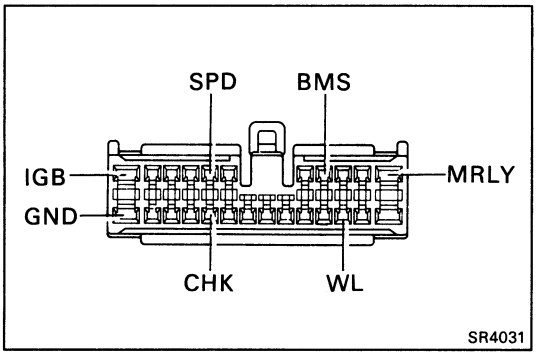

(b) Disconnect the connector and inspect the connector on the wire harness side as shown.

Check for	Tester Connection	Condition		Specified Value
Continuity	GND – Ground	Constant		Continuity
	MRLY – Ground	Constant		Continuity
	BMS – Ground	Power steering motor brushes installed		Continuity
		Power steering motor brushes removed		No continuity
	CHK – Ground	Normal		No continuity
		Connect terminals Tc and E_1 of check connector		Continuity
	SPD – Ground	Ignition switch ON and spin slowly rear wheel		Continuity ↕ No continuity
Voltage	IGB – Ground	Ignition switch	OFF	0 V
			ON	Battery voltage
	WL – Ground	Ignition switch	OFF	0 V
			ON	Battery voltage

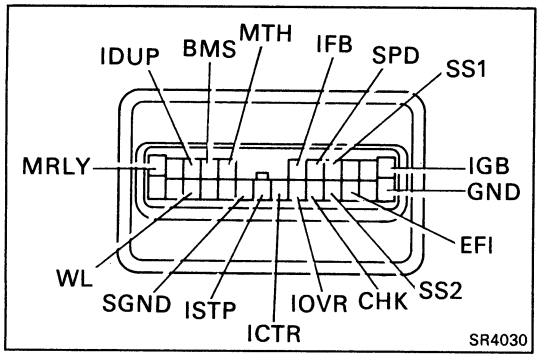

(c) Inspect the system circuit with the connector connected.

Tester Connection	Condition	Voltage
EFI – Ground	Ignition switch ON and engine stopped	1.5 V or less
	Engine running	4.5 V or more
MRLY – Ground	Engine running	5 V or more
BMS – Ground	Ignition switch ON and power steering motor brushes installed	1.5 V or less
	Ignition switch ON and power steering motor brushes removed	4.5 V or more
SPD – Ground	Ignition switch ON and spin slowly rear wheel	1.5 V or less ↕ 4.5 V or more
SS1 – Ground	Ignition switch ON and turn slowly steering wheel	1.5 V or less ↕ 5 V or more
SS2 – Ground		
CHK – Ground	Connect terminals Tc and E_1 of check connector	1.5 V or less
	Normal	4.5 V or more
ICTR – SGND	Steering wheel operated with engine running and vehicle speed at 0 km/h (0 mph)	2.3 – 3.5 V
	Steering wheel operated with vehicle speed at 65 km/h (40 mph)	1.3 – 1.8 V

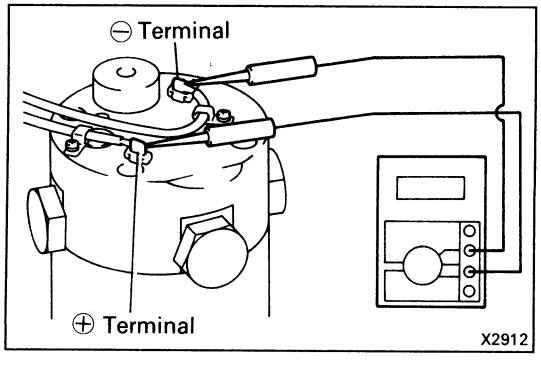

(d) Measure the output voltage (M+) of the power steering driver at the position on the power steering motor shown in the illustration.

Condition	Voltage
Steering wheel operated with engine running and vehicle speed at 0 km/h (0 mph)	9 – 11 V
Steering wheel operated with vehicle speed at 65 km/h (40 mph)	2 – 4 V

NOTICE: Do not bring the tester into contact with anything other than the terminals; if the tester causes a short between the terminals and the housing, this may result in a blown fuse or incorrect measurement.

SRS AIRBAG

	Page
GENERAL DESCRIPTION	AB-2
DESCRIPTION	AB-5
OPERATION	AB-7
INSPECTION ITEMS AND REPLACEMENT REQUIREMENTS	AB-11
REMOVAL AND INSTALLATION OF COMPONENT PARTS	
Steering Wheel Pad and Spiral Cable	AB-15
Front Airbag Sensor	AB-17
Center Airbag Sensor Assembly	AB-19
REPLACEMENT OF REPAIR WIRE FOR FRONT AIRBAG SENSOR	AB-21
TROUBLESHOOTING	AB-24
DISPOSAL OF STEERING WHEEL PAD (WITH AIRBAG)	AB-82
DISPOSAL OF CENTER AIRBAG SENSOR ASSEMBLY	AB-89

GENERAL DESCRIPTION

The 1991 MR2 for USA specifications is equipped with an SRS (Supplemental Restraint System) airbag.

Failure to carry out service operations in the correct sequence could cause the airbag system to unexpectedly deploy during servicing, possibly leading to a serious accident.

Further, if a mistake is made in servicing the airbag system, it is possible the airbag may fail to operate when required.

Before performing servicing (including removal or installation of parts, inspection or replacement), be sure to read the following items carefully, then follow the correct procedure described in the repair manual.

1. Malfunction symptoms of the airbag system are difficult to confirm, so the diagnostic codes become the most important source of information when troubleshooting.

   When troubleshooting the airbag system, always inspect the diagnostic codes before disconnecting the battery (See page AB-24).

2. **Work must be started after approx. 20 seconds or longer from the time the ignition switch is turned to the LOCK position and the negative (–) terminal cable is disconnected from the battery. (The airbag system is equipped with a back-up power source so that if work is started within 20 seconds of disconnecting the negative (–) terminal cable of the battery, the airbag may be deployed.)**

   When the negative (–) terminal cable is disconnected from the battery, memory of the clock and audio systems will be cancelled. So before starting work, make a record of the contents memorized by the audio memory system. Then when work is finished, reset the audio system as before and adjust the clock.

   To avoid erasing the memory of each memory system, never use a back-up power supply from outside the vehicle.

3. Even in cases of a minor collision where the airbag does not deploy, the front airbag sensors and the steering wheel pad should be inspected (See page AB-11).

4. Never use airbag parts from another vehicle. When replacing parts, replace them with new parts.

5. Before repairs, remove the airbag sensors if shocks are likely to be applied to the sensors during repairs.

6. The center airbag sensor assembly contains mercury.
   After performing replacement, do not destroy the old part. When scrapping the vehicle or replacing the center airbag sensor assembly itself, remove the center airbag sensor assembly and dispose of it as toxic waste.

7. Never disassemble and repair the front airbag sensors, center airbag sensor assembly or steering wheel pad in order to reuse it.

8. If the front airbag sensors, center airbag sensor assembly or steering wheel pad have been dropped, or if there are cracks, dents or other defects in the case, bracket or connector, replace them with new ones.

9. Do not expose the front airbag sensors, center airbag sensor assembly or steering wheel pad directly to hot air or flames.

10. Use a volt/ohmmeter with high impedance (10 kΩ/V minimum) for troubleshooting of the electrical circuit.

11. Information labels are attached to the periphery of the airbag components. Follow the instructions on the notices.

12. After work on the airbag system is completed, perform the airbag warning light check (See page AB-29).

FRONT AIRBAG SENSOR

1. Never reuse the front airbag sensors involved in a collision when the airbag has deployed. (Replace both the left and right airbag sensors.)
2. Install the front airbag sensor with the arrow on the sensor facing toward the front of the vehicle.
3. The front airbag sensor set bolts and nuts have been anti-rust treated.
   When the sensor is removed, always replace the set bolt and nut with new ones.

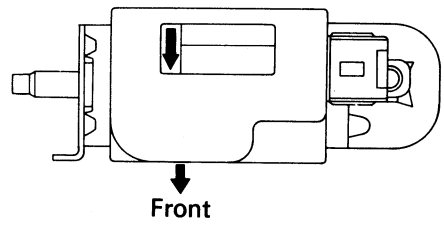

AB0255

4. The front airbag sensor is equipped with an electrical connection check mechanism. Be sure to lock this mechanism securely when connecting the connector. If the connector is not securely locked, a malfunction code will be detected by the diagnosis system (See page AB-9).

SPIRAL CABLE (in COMBINATION SWITCH)

The steering wheel must be fitted correctly to the steering column with the spiral cable at the neutral position, otherwise cable disconnection and other troubles may result. Refer to page AB-16 of this manual concerning correct steering wheel installation.

STEERING WHEEL PAD (with AIRBAG)

1. **When removing the steering wheel pad or handling a new steering wheel pad, it should be placed with the pad top surface facing up.**
   In this case, the twin-lock type connector lock lever should be in the locked state and care should be taken to place it so the connector will not be damaged. And do not store a steering wheel pad on top of another one. (Storing the pad with its metallic surface up may lead to a serious accident if the airbag inflates for some reason.)
2. **Never measure the resistance of the airbag squib.**
   (This may cause the airbag to deploy, which is very dangerous.)

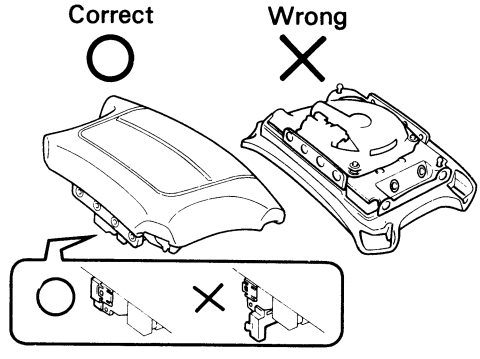

AB0256

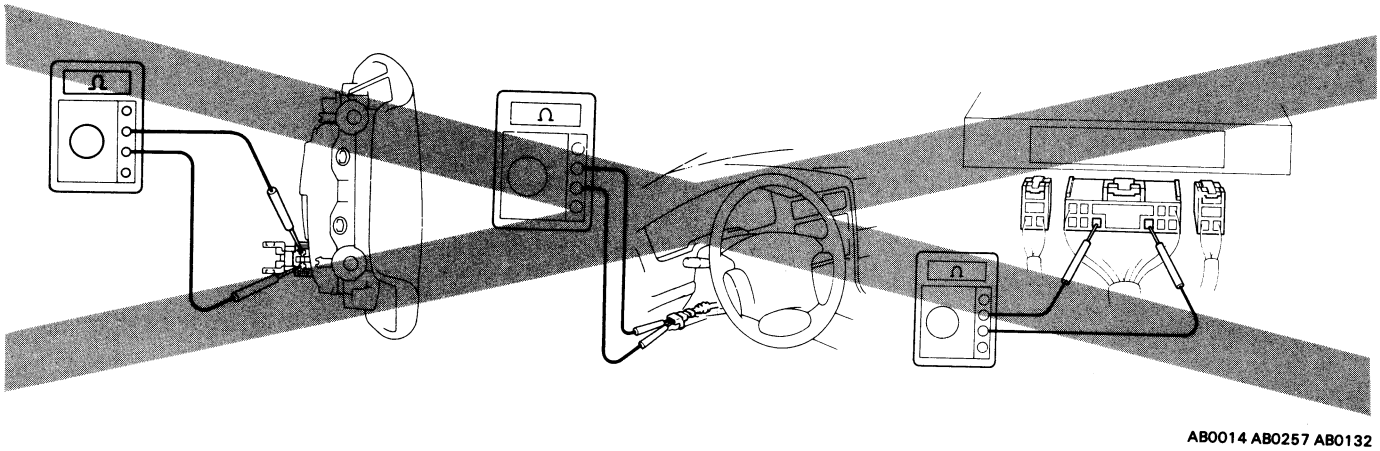

AB0014 AB0257 AB0132

3. Grease should not be applied to the steering wheel pad and the pad should not be cleaned with detergents of any kind.
4. Store the steering wheel pad where the ambient temperature remains below 93°C (200°F), without high humidity and away from electrical noise.
5. When using electric welding, first disconnect the airbag connector (yellow color and 2 pins) under the steering column near the combination switch connector before starting work.
6. When disposing of a vehicle or the steering wheel pad alone, the airbag should be deployed using an SST before disposal (See page AB-82). Perform the operation in a place away from electrical noise.

CENTER AIRBAG SENSOR ASSEMBLY

The connectors to the center airbag sensor assembly should be connected or disconnected with the sensor mounted on the floor. If the connectors are connected or disconnected while the center airbag sensor assembly is not mounted to the floor, it could cause undesired ignition of the airbag system.

WIRE HARNESS AND CONNECTOR

The airbag system wire harness is integrated with the cowl wire harness assembly and luggage compartment wire harness assembly. The wires for the airbag wire harness are encased in a yellow corrugated tube. All the connectors for the system are also a standard yellow color. If the airbag system wire harness becomes disconnected or the connector becomes broken due to an accident, etc., repair or replace it as shown on page AB-21.

DESCRIPTION

The SRS (Supplemental Restraint System) airbag, together with the seat belt, is designed to help protect the driver. In a collision, the airbag sensors detect the shock, and if the front-to-rear shock is greater than a specified value, an airbag stored in the steering wheel pad is inflated instantaneously to help reduce the shock to the driver.

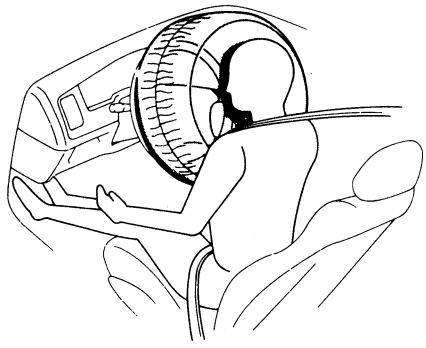

AB0279

LOCATION OF COMPONENTS

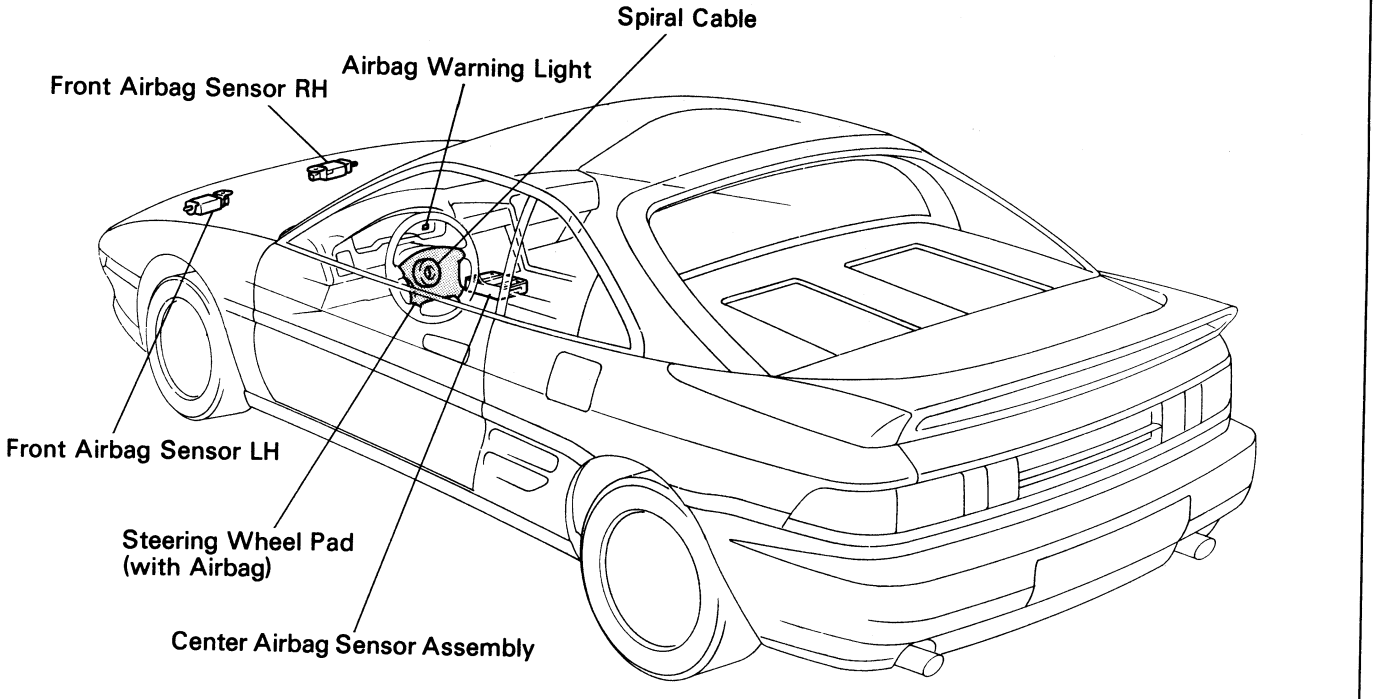

AB0280

WIRING DIAGRAM

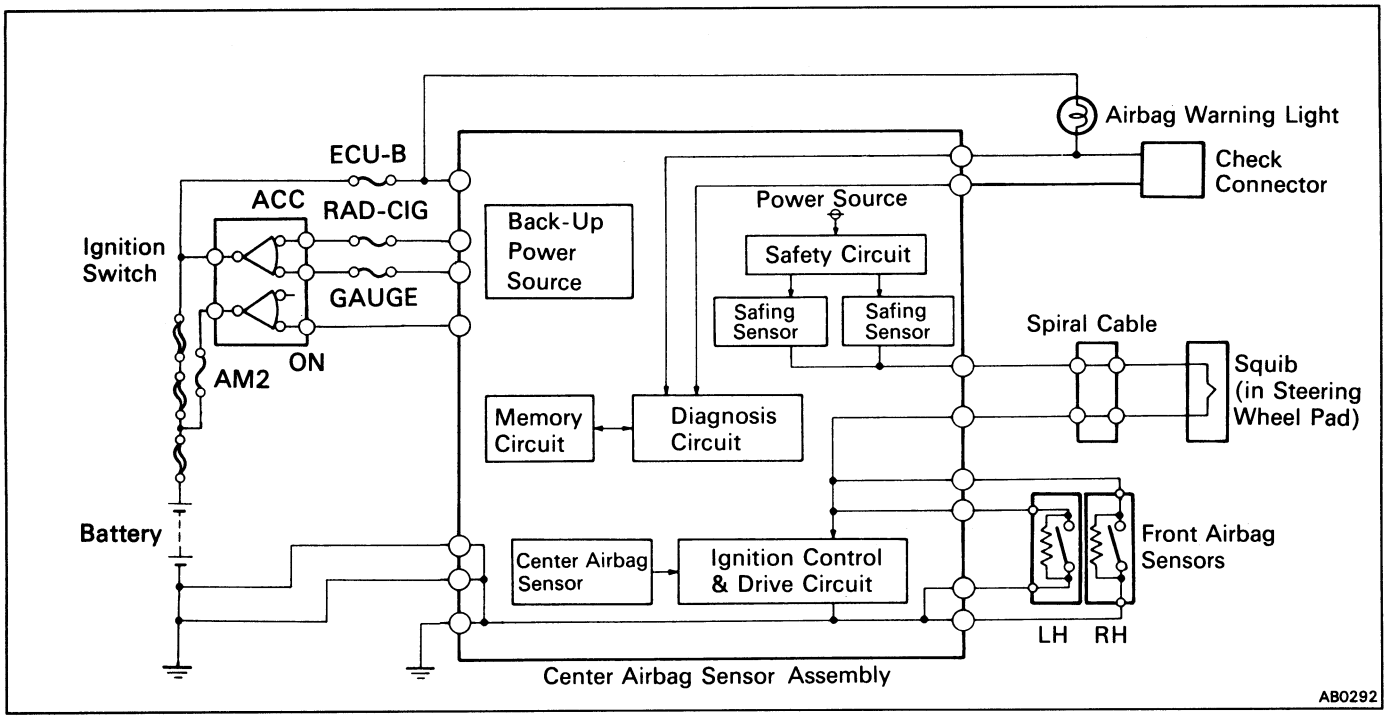

CENTER AIRBAG SENSOR ASSEMBLY CONNECTORS

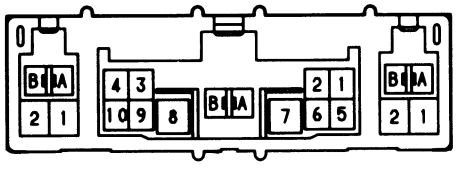

AB0055

Connector	No.	Symbol	Terminal Name
Ⓐ	1	−SL	LH Front Airbag Sensor ⊖
	2	+SL	LH Front Airbag Sensor ⊕
Ⓑ	1	IG_2	Power Source (AM2 Fuse)
	2	IG_1	Power Source (GAUGE Fuse)
	3	ACC	Power Source (RAD-CIG Fuse)
	4	+B	Battery (ECU-B Fuse)
	5	E_2	Ground
	6	LA	Airbag Warning Light
	7	D^-	Squib ⊖
	8	D^+	Squib ⊕
	9	Tc	Diagnosis
	10	E_1	Ground
Ⓒ	1	+SR	RH Front Airbag Sensor ⊕
	2	−SR	RH Front Airbag Sensor ⊖
Ⓐ Ⓑ Ⓒ	A	−	Electrical Connection Check Mechanism
	B	−	Electrical Connection Check Mechanism

OPERATION

FUNCTION OF COMPONENTS

1. FRONT AIRBAG SENSOR

The front airbag sensors are mounted inside of the radiator upper support. The sensor unit is a mechanical type. When the sensor detects deceleration force above a predetermined limit in a collision, the contacts in the sensor make contact, sending a signal to the center airbag sensor assembly.
The sensor cannot be disassembled.

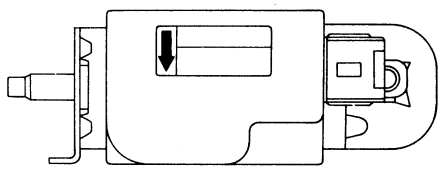

AB0255

2. SPIRAL CABLE (in COMBINATION SWITCH)

A spiral cable is used as an electrical joint from the vehicle body side to the steering wheel.

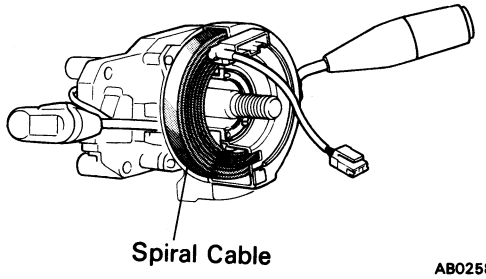

AB0258

3. STEERING WHEEL PAD (with AIRBAG)

The inflater and bag of the airbag system are stored in the steering wheel pad and cannot be disassembled.
The inflater contains a squib, igniter charge, gas generant, etc., and inflates the bag in case of a frontal collision.

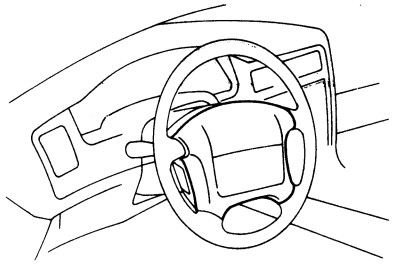

AB0259

4. AIRBAG WARNING LIGHT

The airbag warning light is located on the combination meter. It goes on to alert the driver of trouble in the system when a malfunction is detected in the center airbag sensor assembly self-diagnosis. In normal operating condition when the ignition switch is turned to the ACC or ON position, the light goes on for about 6 seconds and then goes off.

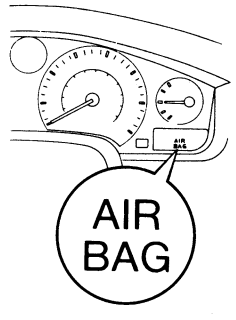

AB0260

5. CENTER AIRBAG SENSOR ASSEMBLY

The center airbag sensor assembly is mounted on the floor inside the center cluster. The center airbag sensor assembly consists of a center airbag sensor, safing sensors, ignition control and drive circuit, diagnosis circuit, etc. It receives signals from the airbag sensors, judges whether the airbag must be activated or not and diagnoses system malfunctions.

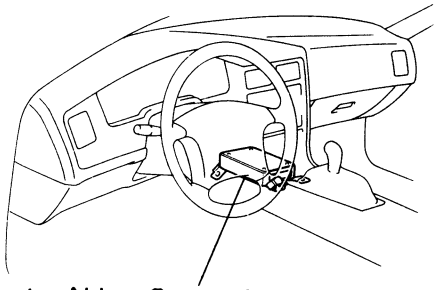

AB0261

6. AIRBAG CONNECTORS

All connectors in the airbag system are colored yellow. Connectors having special functions and specifically designed for airbags are used in the locations shown below to ensure high reliability. These connectors use durable gold-plated terminals.

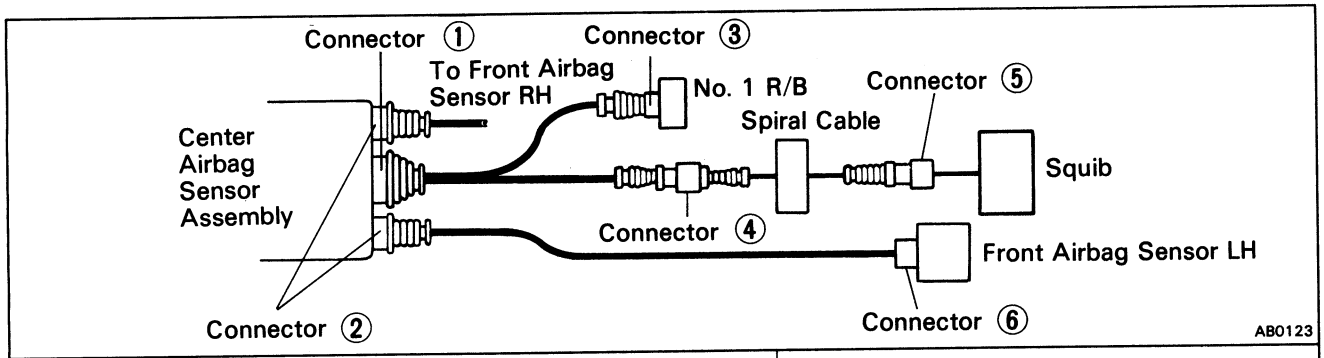

No.	Item	Application
(1)	Terminal Twin-Lock Mechanism	Connectors ①, ②, ③, ④, ⑤, ⑥
(2)	Airbag Activation Prevention Mechanism	Connectors ①, ④, ⑤
(3)	Electrical Connection Check Mechanism	Connectors ①, ②, ⑥
(4)	Connector Twin-Lock Mechanism	Connectors ④, ⑤

(1) Terminal Twin-Lock Mechanism

Each connector has a two-piece construction consisting of a housing and a spacer. This design secures the locking of the terminal by two locking devices (the spacer and the lance) to prevent terminals from coming out.

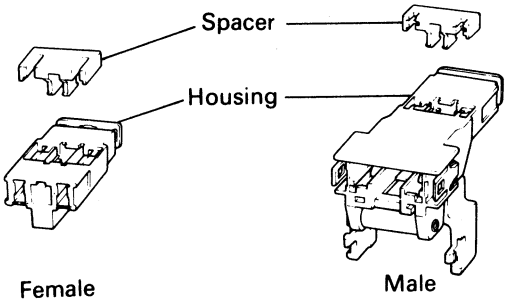

(2) Airbag Activation Prevention Mechanism

Each connector contains a short spring plate. When the connector is disconnected, the short spring plate automatically connects the power source and grounding terminals of the squib.

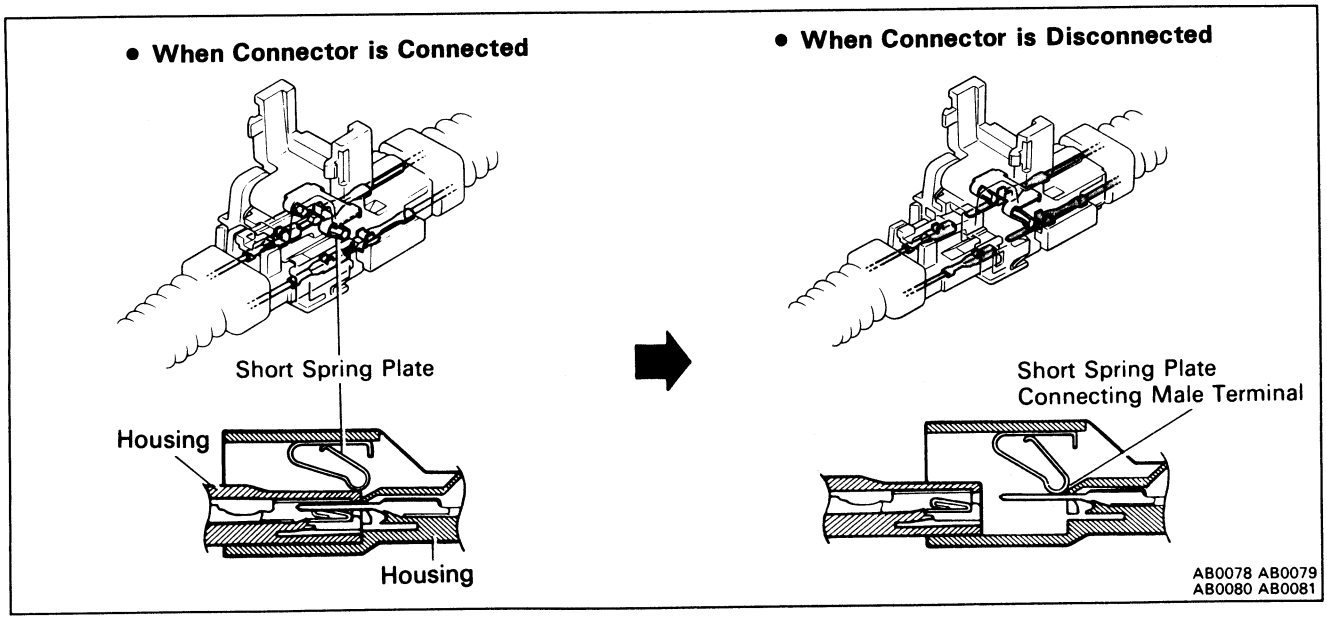

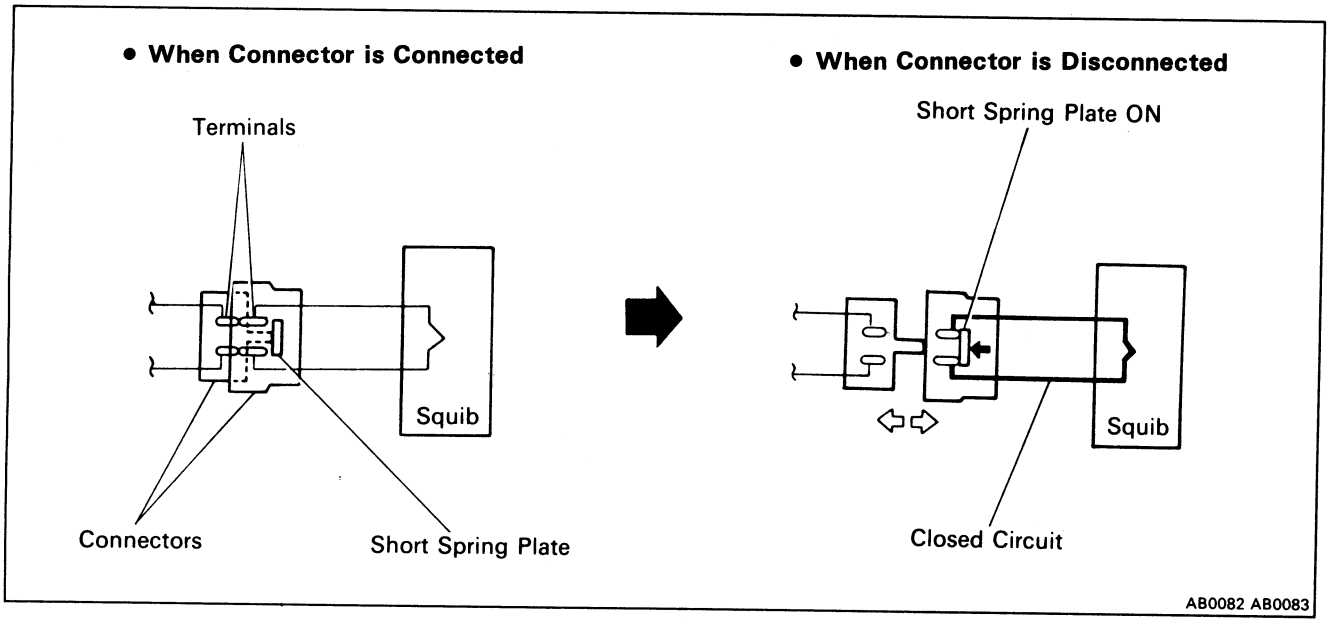

HINT: The illustration shows connectors ④ and ⑤ . Connector ① has a short spring plate on the female terminal side, but the operating principle is the same.

(3) Electrical Connection Check Mechanism

This mechanism is designed to electrically check if connectors are connected correctly and completely. The electrical connection check mechanism is designed so that the connection detection pin connects with the diagnosis terminals when the connector housing lock is in the locked condition.

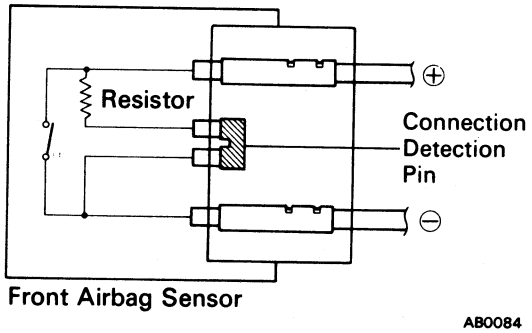

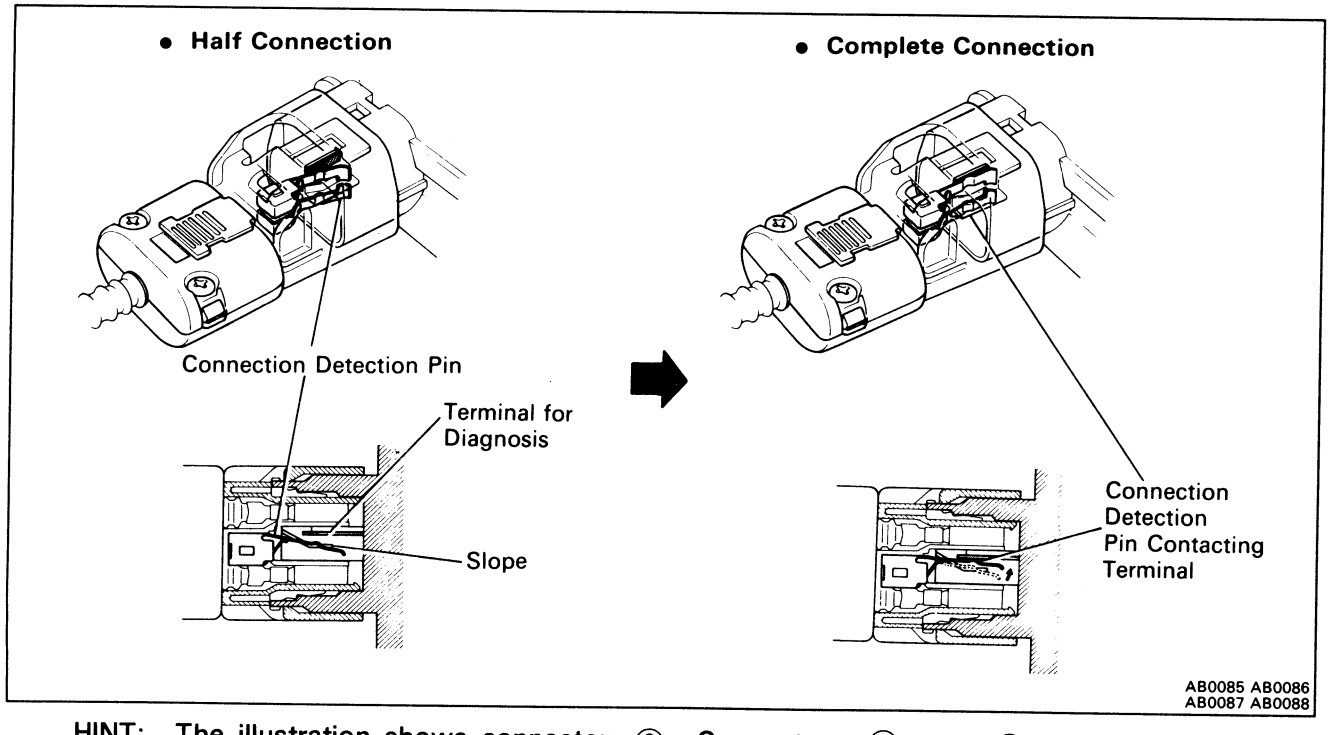

HINT: The illustration shows connector ⑥ . Connectors ① and ② also have the same operating principle.

(4) Connector Twin-Lock Mechanism

With this mechanism connectors (male and female connectors) are locked by two locking devices to increase connection reliability.
If the primary lock is incomplete, ribs interfere and prevent the secondary lock.

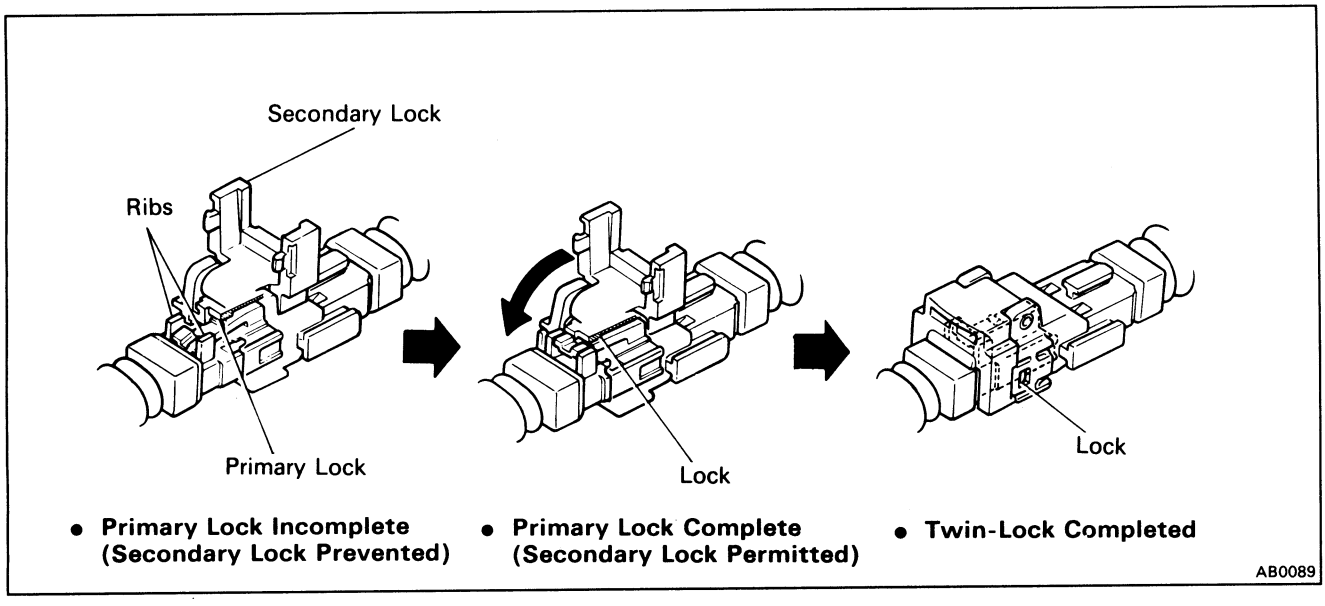

When the vehicle is involved in a frontal collision in the hatched area (Fig. 1) and the shock is larger than a predetermined level, the airbag is activated automatically. Safing sensors are designed to go on at a smaller deceleration rate than the front and center airbag sensors. As illustrated in Fig. 2 below, ignition is caused when current flows to the squib, which happens when a safing sensor and a front airbag sensor and/or the center airbag sensor go on simultaneously.

When a deceleration force acts on the sensors, it causes the squib to ignite. Gas is then generated, increasing the pressure inside the bag rapidly. The inflated bag breaks open the steering wheel pad. Bag inflation then ends, and the gas is discharged through discharge holes provided behind the bag. The bag becomes deflated as a result.

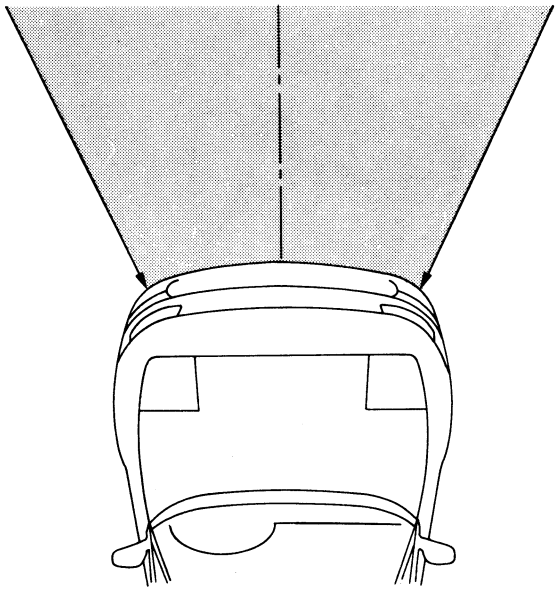

Fig. 1 AB0262

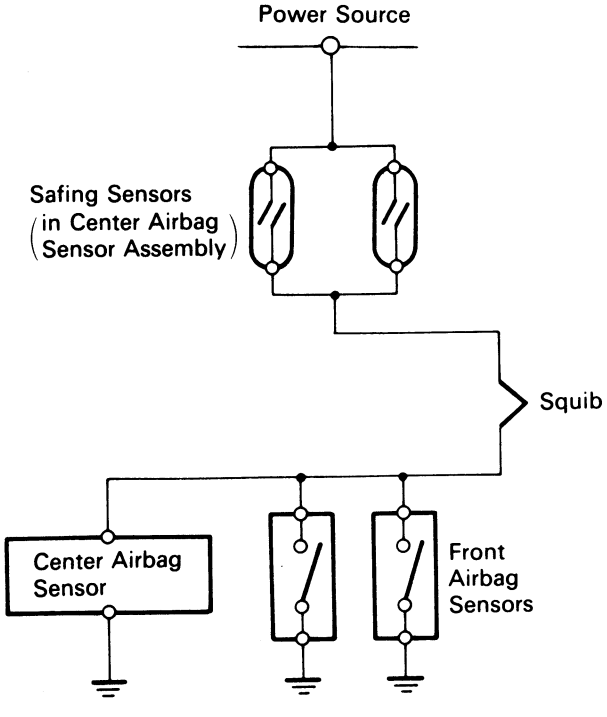

Fig. 2 AB0051

INSPECTION ITEMS AND REPLACEMENT REQUIREMENTS

If a vehicle is brought in for an airbag system inspection, or if a vehicle which has been involved in a collision is inspected, perform the inspection in accordance with the following procedure. If any problems are discovered, replace the affected part with a new one.

Steering Wheel Pad (with Airbag), Steering Wheel and Spiral Cable

INSPECTION ITEMS

1. VEHICLES NOT INVOLVED IN A COLLISION

(a) Perform a diagnostic system check (See page AB-29).

(b) Perform a visual check which includes the following items with the steering wheel pad (with airbag) installed in the vehicle.

- Check for cuts, minute cracks or marked discoloration of the steering wheel pad top surface and grooved portion.

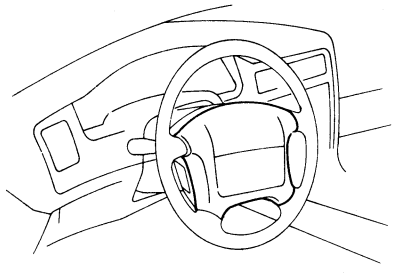

AB0259

2. VEHICLES INVOLVED IN A COLLISION

(IF THE AIRBAG IS NOT DEPLOYED)

(a) Perform a diagnostic system check (See page AB-29).

(b) Perform a visual check which includes the following items with the steering wheel pad (with airbag) removed from the vehicle.

- Check for cuts or cracks in, or marked discoloration of the steering wheel pad top surface and grooved portion.
- Check for cuts and cracks in, or chipping of connectors and wire harnesses.
- Check for deformation of the horn button contact plate of the steering wheel.

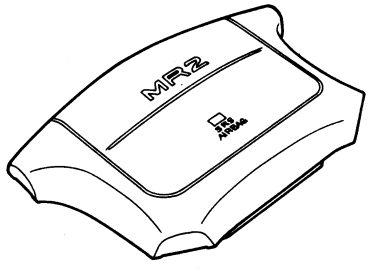

AB0263

HINT:

- If the horn button contact plate of the steering wheel is deformed, never repair it. Always replace the steering wheel with a new one.
- There should be no interference between the steering wheel pad and the steering wheel, and the clearance should be uniform all the way around when the new steering wheel pad is installed on the steering wheel.

Horn Button Contact Plate

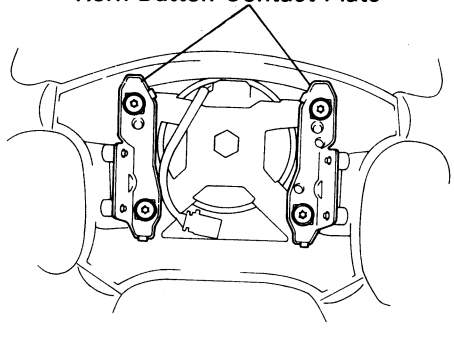

AB0204

CAUTION: For removal and installation of the steering wheel pad, see page AB-15, "REMOVAL AND INSTALLATION" and be sure to follow the correct procedure.

(IF THE AIRBAG IS DEPLOYED)

(a) Perform a diagnostic system check (See page AB-29).

(b) Perform a visual check which includes the following items with the steering wheel pad (with airbag) removed from the vehicle.

- Check for deformation of the horn button contact plate of the steering wheel.
- Check for damage to the spiral cable connector and wire harness.

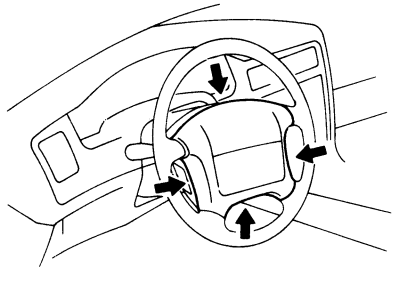

AB0259

HINT:
- If the horn button contact plate of the steering wheel is deformed, never repair it. Always replace the steering wheel with a new one.
- There should be no interference between the steering wheel pad and the steering wheel, and the clearance should be uniform all the way around when the new steering wheel pad is installed on the steering wheel.

REPLACEMENT REQUIREMENTS

In the following cases, replace the steering wheel pad, steering wheel or spiral cable.

CAUTION: For replacement of the steering wheel pad, see page AB-15, "REMOVAL AND INSTALLATION" and be sure to follow the correct procedure.

- If the airbag has been deployed.
- If the steering wheel pad or spiral cable has been found to be faulty in troubleshooting.
- If the steering wheel pad, steering wheel or spiral cable has been found to be faulty during the check in item **1.** – (b) or **2.** – (b).
- If the steering wheel pad has been dropped.

Front Airbag Sensor

INSPECTION ITEMS

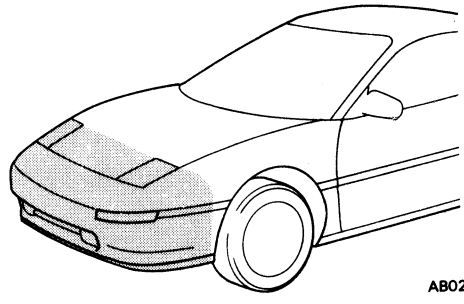

AB0264

1. VEHICLES NOT INVOLVED IN A COLLISION

- Perform a diagnostic system check (See page AB-29).

2. VEHICLES INVOLVED IN A COLLISION

(a) Perform a diagnostic system check (See page AB-29).

(b) If the front bumper of the car or its periphery is damaged, perform visual check for damage to the front airbag sensor, which includes the following items even if the airbag was not deployed:

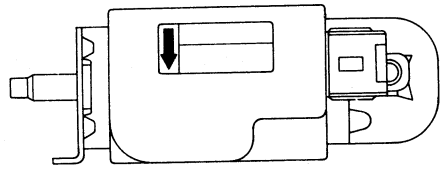

AB0255

- Bracket deformation.
- Peeling of paint from the bracket.
- Cracks, dents or chips in the case.
- Cracks and dents in, or chipping and scratches of the connector.
- Peeling off of the label or damage to the series number.

Also refer to the body dimension drawings on page BO-78 and check the dimensions and mounting surface angle of the body area where the front airbag sensors are mounted.
(The airbag may malfunction, or may not work, if the mounting angle or dimensions of the sensor mount are not correct.)

REPLACEMENT REQUIREMENTS

In the following cases, replace the front airbag sensor.

NOTICE: For replacement of the front airbag sensor, see page AB-17, "REMOVAL AND INSTALLATION".

- If the airbag has been deployed in a collision.
  (Replace both the left and right airbag sensors.)
- If the front airbag sensor has been found to be faulty in troubleshooting.
- If the front airbag sensor has been found to be faulty during the check in item **2.** – (b).
- If the front airbag sensor has been dropped.

Center Airbag Sensor Assembly

INSPECTION ITEMS

1. VEHICLES NOT INVOLVED IN A COLLISION

- Perform a diagnostic system check (See page AB-29).

2. VEHICLES INVOLVED IN A COLLISION

(IF THE AIRBAG IS NOT DEPLOYED)

- Perform a diagnostic system check (See page AB-29).

(IF THE AIRBAG IS DEPLOYED)

(a) Perform a diagnostic system check (See page AB-29).

(b) Check the following items in the center airbag sensor assembly:

- Deformation of the bracket or case.
- Vinyl seat broken.
- Damage to the connector.

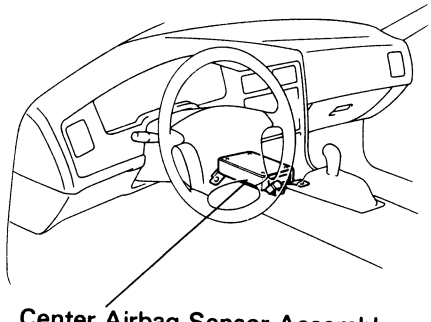

Center Airbag Sensor Assembly

AB0261

NOTICE: If the center airbag sensor assembly interferes with any other parts, perform a check after repairs.

REPLACEMENT REQUIREMENTS

In the following cases, replace the center airbag sensor assembly.

NOTICE: For replacement of the center airbag sensor assembly, see page AB-19, "REMOVAL AND INSTALLATION".

- If the center airbag sensor assembly has been found to be faulty in troubleshooting.
- If the center airbag sensor assembly has been found to be faulty during the check in item **2.** – (b).
- If the center airbag sensor assembly has been dropped.

Wire Harness and Connector

HINT: The airbag system wire harness is integrated with the cowl wire harness assembly and luggage compartment wire harness assembly. The wires for the airbag wire harness are encased in a yellow corrugated tube and all the connectors in the system are a standard yellow color.

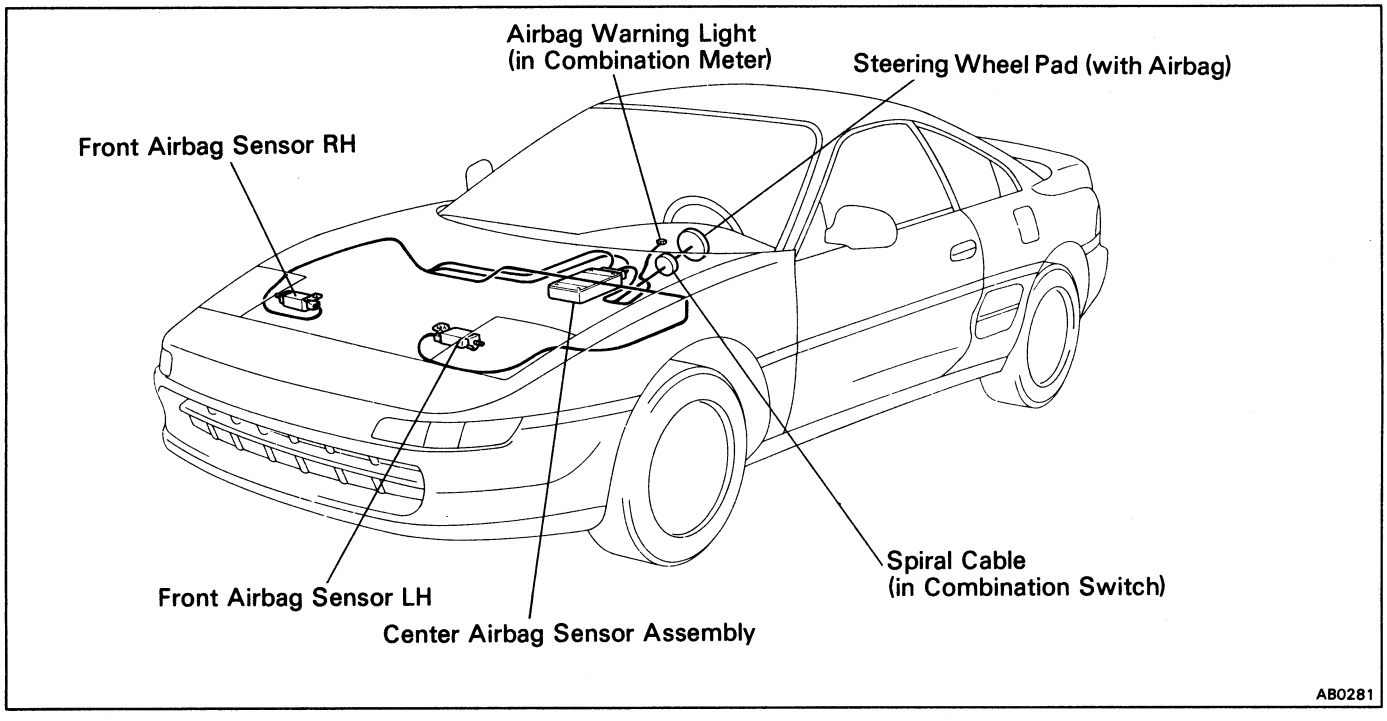

INSPECTION ITEMS

1. **VEHICLES NOT INVOLVED IN A COLLISION**
   - Perform a diagnostic system check (See page AB-29).

2. **VEHICLES INVOLVED IN A COLLISION**
   (a) Perform a diagnostic system check (See page AB-29).
   (b) If there is a break in any of the wires in the airbag system wire harness, or if conductors are exposed.
   (c) If the airbag system wire harness connectors are cracked or chipped.

REPLACEMENT REQUIREMENTS

In the following cases, replace the wire harness or connector.

- If any part of the airbag system wire harness or any connector has been found to be faulty in troubleshooting.
- If any part of the airbag system wire harness or any connector has been found to be faulty during the check in item **2.** – (b) or (c).

NOTICE: If the wire harness used in the airbag system is damaged, replace the whole wire harness assembly.
When the connector to the front airbag sensors can be repaired alone (when there is no damage to the wire harness), use the repair wire specially designed for the purpose (See page AB-21).

REMOVAL AND INSTALLATION OF COMPONENT PARTS

Steering Wheel Pad and Spiral Cable

Remove and install the parts as shown.

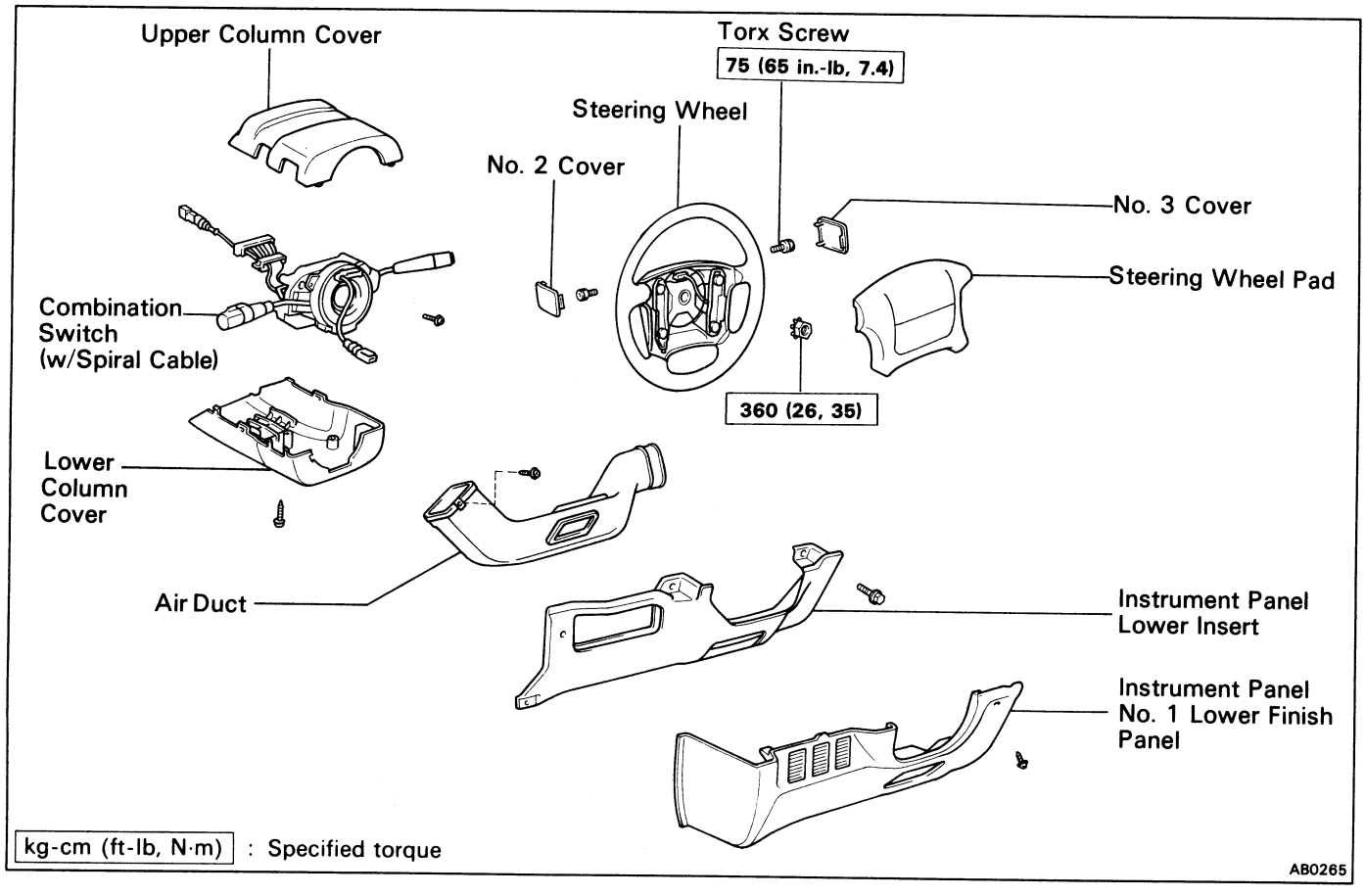

(MAIN POINTS OF REMOVAL AND INSTALLATION)

CAUTION: Work must be started after approx. 20 seconds or longer from the time the ignition switch is turned to the LOCK position and the negative (–) terminal cable is disconnected from the battery (See page AB-2).

NOTICE:

- **If the wiring connector of the airbag system is disconnected with the ignition switch at ON or ACC, diagnostic codes will be recorded.**
- **Never use airbag parts from another vehicle. When replacing parts, replace with new parts.**

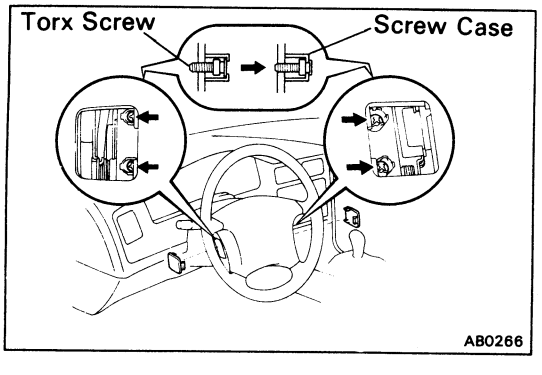

1. REMOVE STEERING WHEEL PAD

(a) Remove negative terminal (–) from the battery.

(b) Place the front wheels facing straight ahead.

(c) Using a torx wrench, loosen the four screws.

Torx wrench: T30 (Part No. 09042-00010 or locally manufactured tool)

(d) Loosen the torx screws until the groove along the screw circumference catches on the screw case.

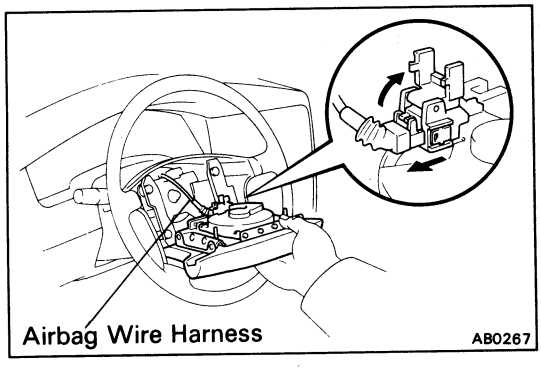

(e) Pull the wheel pad out from the steering wheel and disconnect the airbag connector.

NOTICE: When removing the wheel pad, take care not to pull the airbag wire harness.

CAUTION:
- **When storing the wheel pad, keep the upper surface of the pad facing upward (See pages AB-3, 4).**
- **Never disassemble the wheel pad.**

2. REMOVE STEERING WHEEL

(a) Disconnect the connector.

(b) Remove the set nut.

(c) Place matchmarks on the steering wheel and main shaft.

(d) Using SST, remove the steering wheel.

SST 09213-31021

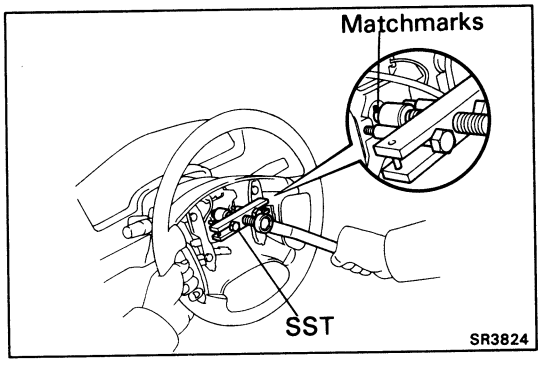

3. REMOVE AND INSTALL SPIRAL CABLE FROM/TO COMBINATION SWITCH
(See page BE-30)

NOTICE: Do not disassemble the spiral cable or apply oil to it.

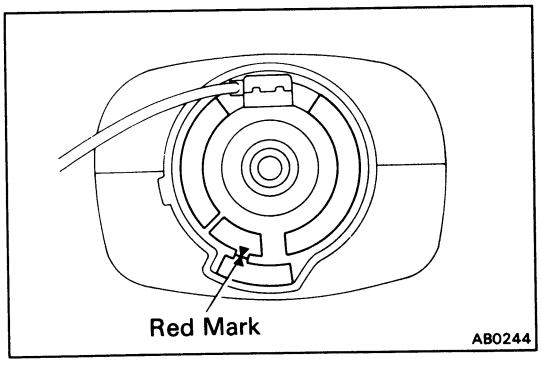

4. CENTER SPIRAL CABLE

(a) Check that the front wheels are facing straight ahead.

(b) Turn the spiral cable counterclockwise by hand until it becomes harder to turn the cable.

(c) Then rotate the spiral cable clockwise about 2 1/2 turns to align the red mark.

HINT: The spiral cable will rotate about 2 1/2 turns to either left or right of the center.

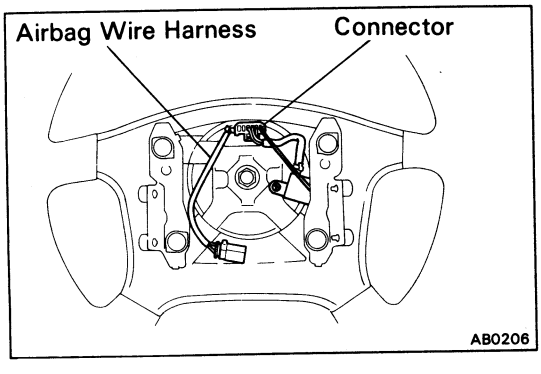

5. INSTALL STEERING WHEEL

(a) Align matchmarks on the steering wheel and main shaft, and install the steering wheel to the main shaft.

(b) Install and torque the set nut.

Torque: 360 kg-cm (26 ft-lb, 35 N·m)

(c) Connect the connector.

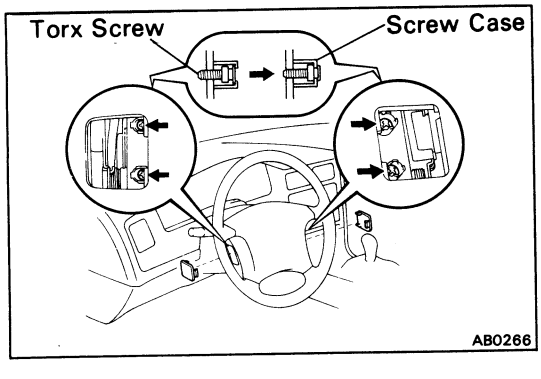

6. INSTALL STEERING WHEEL PAD

(a) Connect the airbag connector.

(b) Install the wheel pad after confirming that the circumference groove of the torx screws is caught on the screw case.

(c) Using a torx wrench, tighten the four screws.

Torque: 75 kg-cm (65 in.-lb, 7.4 N·m)

NOTICE:
- **Make sure the wheel pad is installed to the specified torque.**
- **If the wheel pad has been dropped, or there are cracks, dents or other defects in the case or connector, replace the wheel pad with a new one.**
- **When installing the wheel pad, take care that the wirings do not interfere with other parts and are not pinched between other parts.**

7. CHECK STEERING WHEEL CENTER POINT

Front Airbag Sensor

Remove and install the parts as shown.

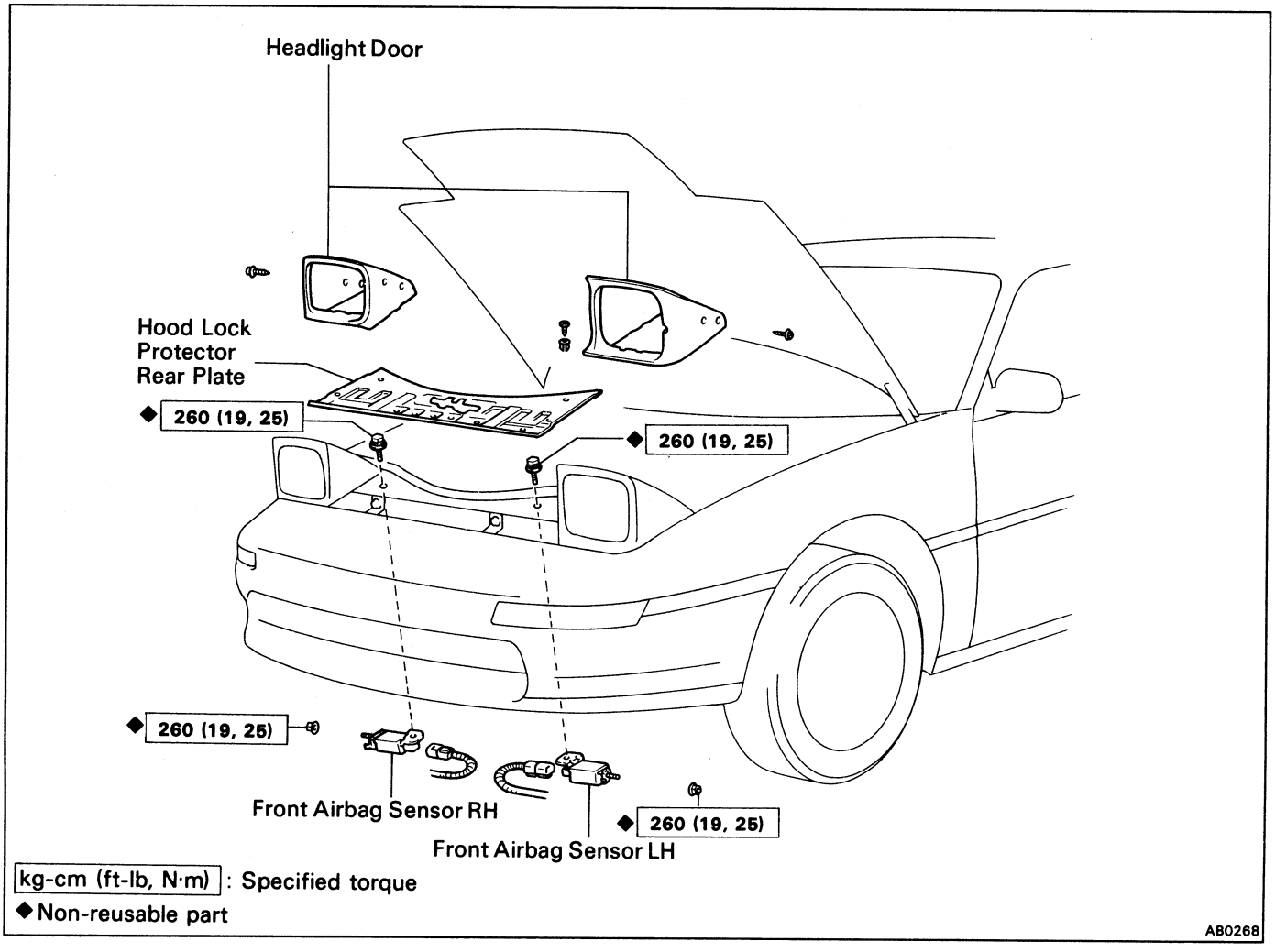

(MAIN POINTS OF REMOVAL AND INSTALLATION)

CAUTION: Work must be started after approx. 20 seconds or longer from the time the ignition switch is turned to the LOCK position and the negative (–) terminal cable is disconnected from the battery (See page AB-2).

NOTICE:

- **If the wiring connector of the airbag system is disconnected with the ignition switch at ON or ACC, diagnostic codes will be recorded.**
- **Never use airbag parts from another vehicle. When replacing parts, replace with new parts.**
- **Never reuse the sensor involved in a collision when the airbag has deployed.**
- **Never repair a sensor in order to reuse it.**

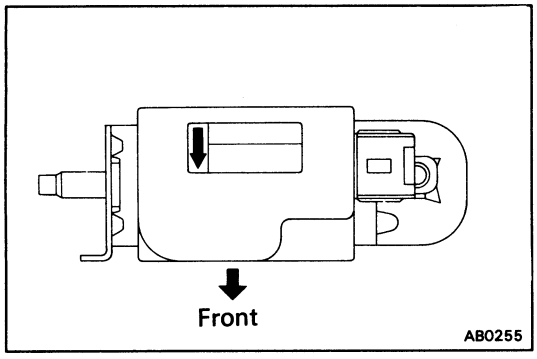

INSTALL FRONT AIRBAG SENSOR

Install the sensor with the arrow on the sensor facing toward the front of the vehicle.

Torque: 260 kg-cm (19 ft-lb, 25 N·m)

NOTICE:

- **Make sure the sensor is installed to the specified torque.**
- **If the sensor has been dropped, or there are cracks, dents or other defects in the case, bracket or connector, replace the sensor with a new one.**
- **The sensor set bolts and nuts have been anti-rust treated.**
  When the sensor is removed, always replace the set bolt and nut with new ones.
- **After installation, shake the sensor to check that there is no looseness.**
- **The front sensor is equipped with an electrical connection check mechanism. Be sure to lock this mechanism securely when connecting the connector. If the connector is not securely locked, a malfunction code will be detected by the diagnosis system.**
- **Check that the dimensions of the body where the front airbag sensor is installed match those in the body dimension drawings on page BO-78.**
  (The airbag may malfunction, or may not work, if the mounting angle or dimensions of the sensor mount are not correct.)

Center Airbag Sensor Assembly

Remove and install the parts as shown.

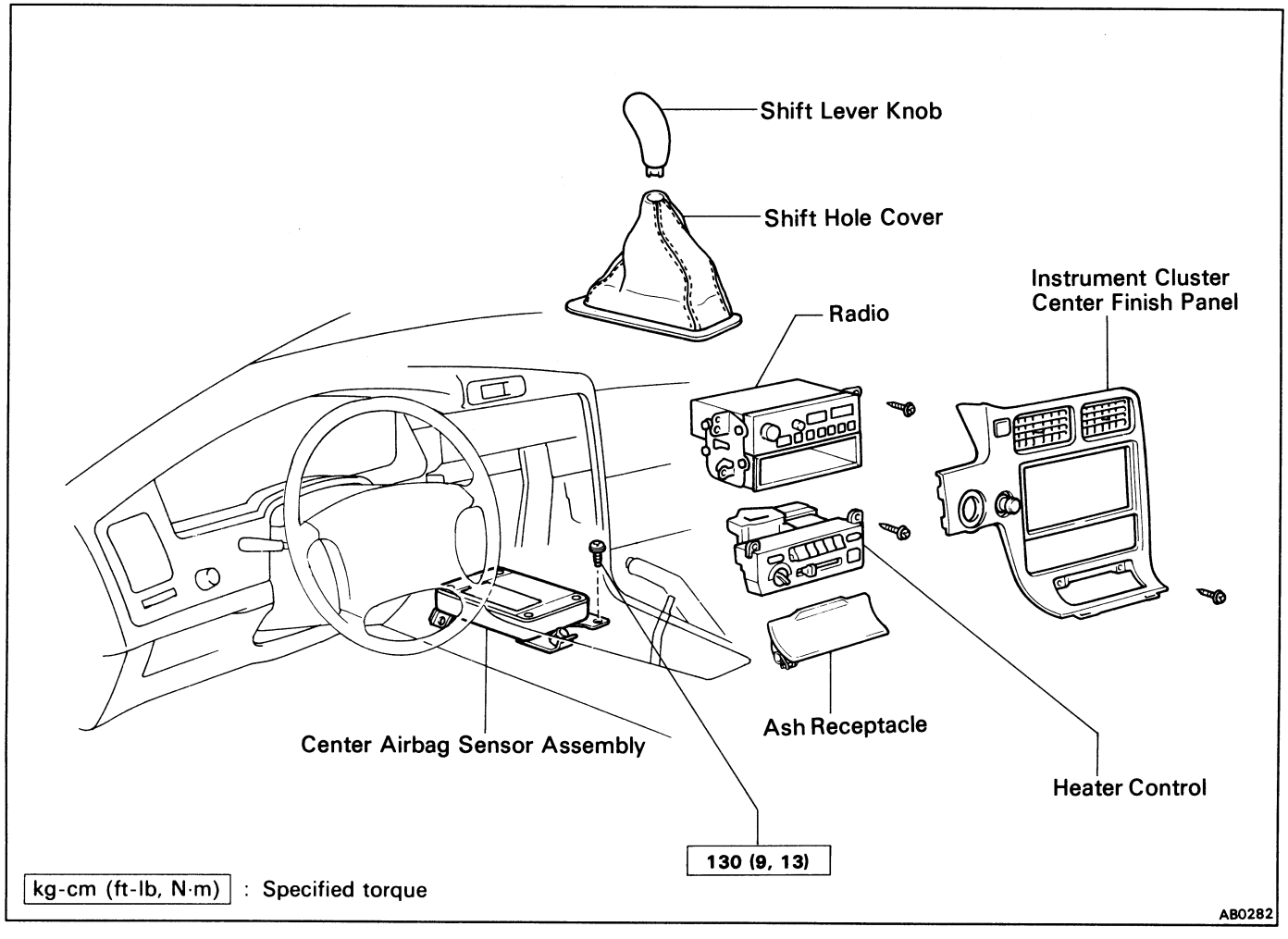

(MAIN POINTS OF REMOVAL AND INSTALLATION)

CAUTION: Work must be started after approx. 20 seconds or longer from the time the ignition switch is turned to the LOCK position and the negative (–) terminal cable is disconnected from the battery (See page AB-2).

NOTICE:

- **Do not open the cover or the case of the ECU and various computers unless absolutely necessary. (If the IC terminals are touched, the IC may be destroyed by static electricity.)**
- **Never use airbag parts from another vehicle. When replacing parts, replace with new parts.**
- **Never repair a sensor in order to reuse it.**

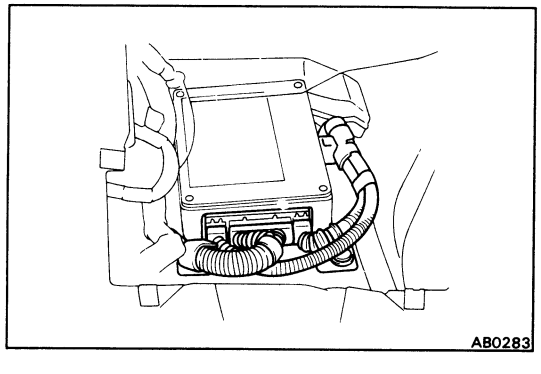

REMOVE AND INSTALL CENTER AIRBAG SENSOR ASSEMBLY

(a) Disconnect and connect the connectors.

NOTICE: Removal and installation of the connectors is done with the sensor assembly installed.

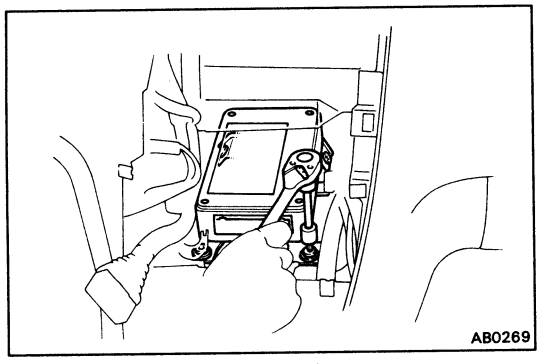

(b) Using a torx wrench, loosen and tighten the four screws.

Torx wrench: T40 (Part No. 09042-00020 or locally manufactured tool)

Torque: 130 kg-cm (9 ft-lb, 13 N·m)

NOTICE:

- **Make sure the sensor assembly is installed to the specified torque.**
- **If the sensor assembly has been dropped, or there are cracks, dents or other defects in the case, bracket or connector, replace the sensor assembly with a new one.**
- **When installing the sensor assembly, take care that the airbag wirings do not interfere with other parts and are not pinched between other parts.**
- **After installation, shake the sensor assembly to check that there is no looseness.**

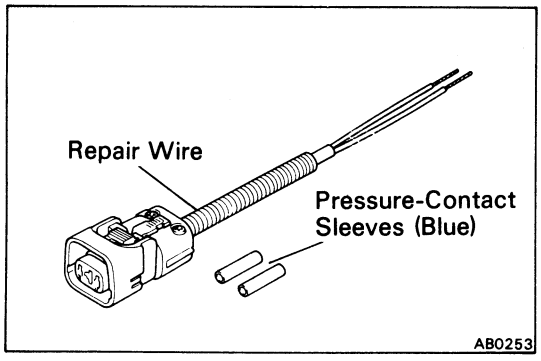

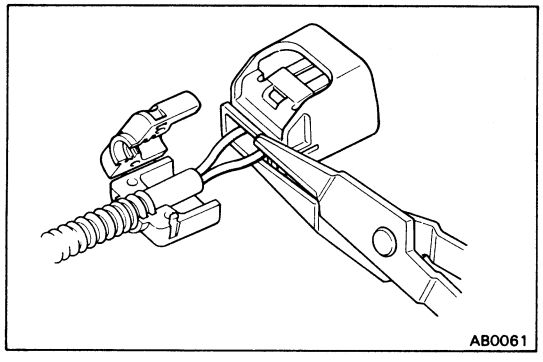

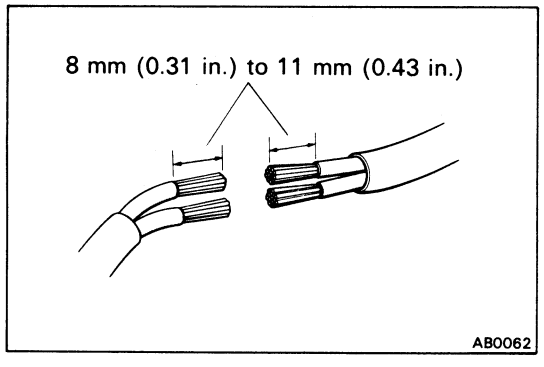

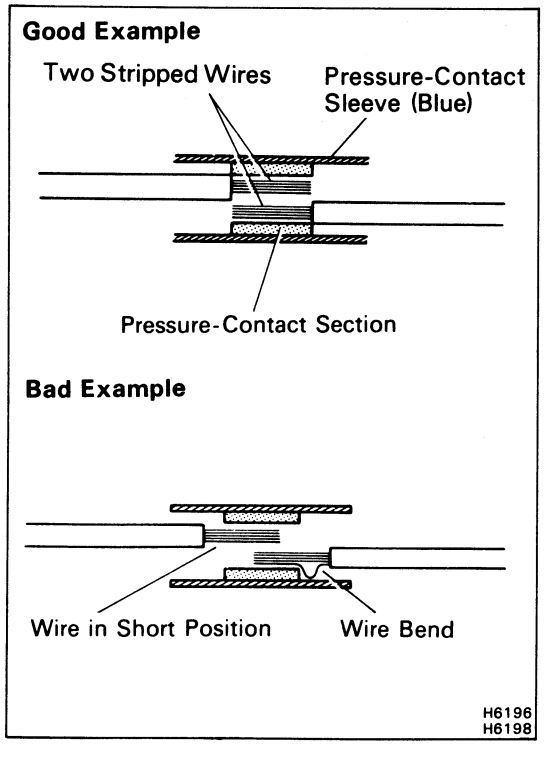

REPLACEMENT OF REPAIR WIRE FOR FRONT AIRBAG SENSOR

Repair wire with two pressure-contact sleeves (Part No. 82988-50010) has been prepared for exclusive use in repairing connector damage etc. caused by frontal collision of the vehicle.

When repairing the front airbag sensor connector on the wire harness side, always use the special repair wire.

NOTICE: Do not replace the connector housing or terminal only.

REPLACEMENT OF AIRBAG REPAIR WIRE

CAUTION: Work must be started after approx. 20 seconds or longer from the time the ignition switch is turned to the "LOCK" position and the negative (–) terminal cable is disconnected from the battery.

1. DISCONNECT WIRE HARNESS AT VEHICLE SIDE

(a) Remove the cover at the rear of the connector housing and expose the wire harness.

(b) Cut the wire harness behind the connector housing.

HINT: The operation is performed more easily if the wire harness is left as long as possible.

2. CONNECT FRONT AIRBAG SENSOR WIRE HARNESS AT VEHICLE SIDE AND REPAIR WIRE

(a) Start stripping at least 8 mm (0.31 in.) to 11 mm (0.43 in.) away from the end of the existing harness at vehicle side and also from the end of the repair wire.

NOTICE: Take care not to damage the wire when stripping the wire harness lead. After finishing the operation, visually inspect the wire. If there is any damage, perform the operation again.

(b) Overlap the two stripped wire ends inside of the pressure-contact sleeve as illustrated on the left.

HINT: The blue pressure-contact sleeve (Part No. 82999-12020) is available as a solitary spare part.

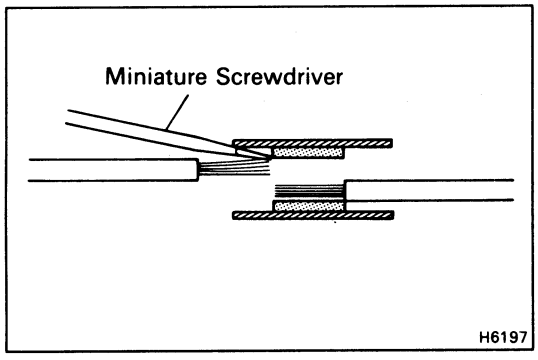

HINT: You might find it easier if you use a miniature screwdriver as a guide as you insert wires into the sleeve.

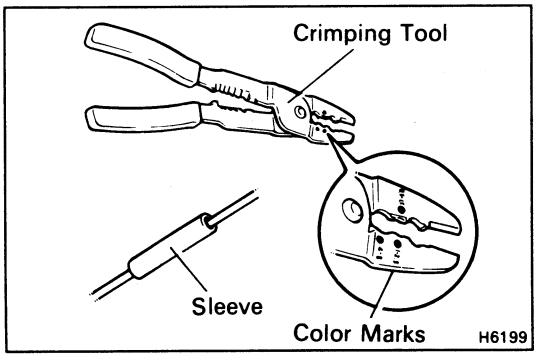

(c) The crimping tool (AMP Parts No. 169060) has color marks on it. Place the sleeve in the correct section of the tool according to the color of the sleeve itself.

HINT: As the crimping tool, AMP "Part No. 169060" is convenient to use.

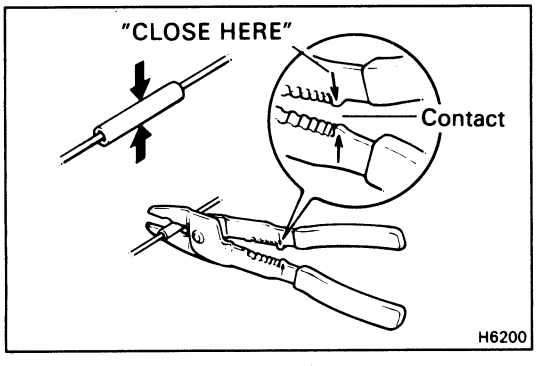

(d) With the center of the sleeve correctly placed between the crimping jaws, squeeze the crimping tool until either end comes into contact at the section marked by "CLOSE HERE".

HINT: Check to see that the sleeve and wires are still in the correct position before closing the crimping tool ends with steady pressure.

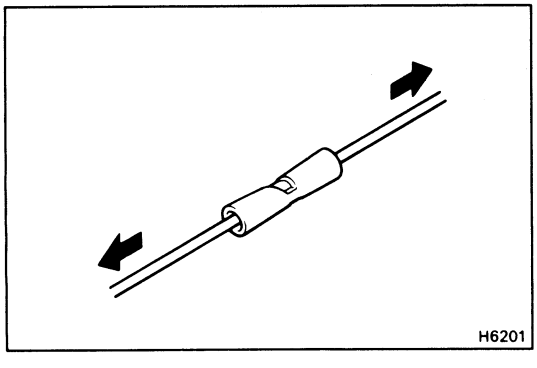

(e) Pull the joined wires to either end. Make sure that they are joined firmly by the sleeve.

NOTICE: If the joined wires come loose the splice is defective, so replace the sleeve and repeat the procedure.

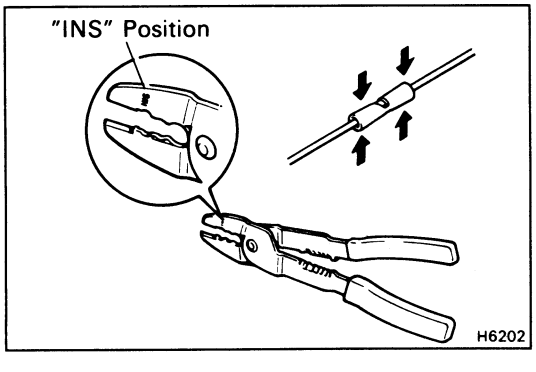

(f) Crimp both ends of the sleeve with the crimping tool at the "INS" position.

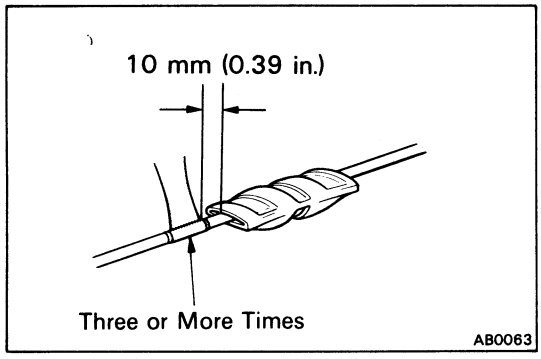

3. PROTECT JOINED SECTION

Wrap silicon tape around the joins to protect them from water.

HINT:

- Before starting the operation, thoroughly wipe dirt and grease off the sections to be joined.
- If the adhesive surfaces of two tapes come in contact they will stick together and will not come apart, so do not remove the backing film except when using the tape.
- Do not let oil and dust, ect. get on the tape surface.

(a) Ready about 100 mm (3.94 in.) of silicon tape (Part No. 08231-00045) and peel off the film.

(b) Stretch the silicon tape until its width is reduced by half.

(c) About 10 mm (0.39 in.) from the end of the pressure-contact sleeve, wrap the silicon tape around the sleeve three or more times while stretching the tape.

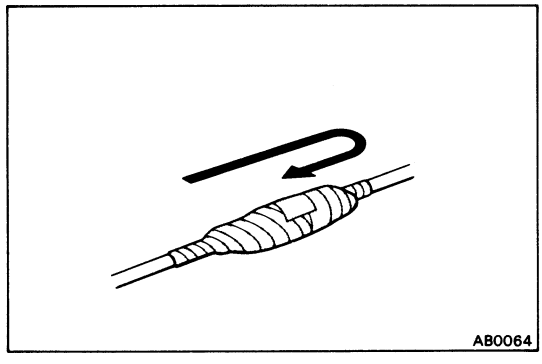

(d) Wrap the remaining part of sleeve with half of the tape overlapping at each turn.

(e) Firmly wrap the tape two times or more about 10 mm (0.39 in.) from the other end of the pressure-contact sleeve, then wrap the tape back towards the start again and firmly finish winding the tape around the center of the sleeve.

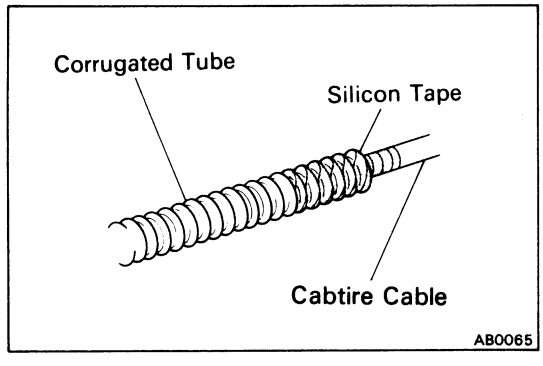

(f) Fix the corrugated tube to the cabtire cable using silicon tape.

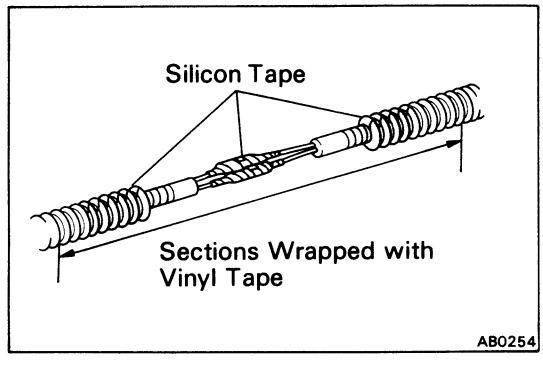

(g) After applying the silicon tape, apply vinyl tape on the corrugated tube of repair wire side over to the corrugated tube of vehicle wire harness side.

TROUBLESHOOTING

How To Proceed With Troubleshooting

Malfunction symptoms of the airbag system are difficult to confirm, so the diagnostic codes become the most important source of information when troubleshooting.
Perform troubleshooting of the airbag system in accordance with the following procedure:

HINT: Do not disconnect the battery negative (–) terminal cable until step [3], Diagnostic Code Check and Recording, has been completed.

[1] CUSTOMER PROBLEM ANALYSIS

Using the CUSTOMER PROBLEM ANALYSIS CHECK SHEET (See page AB-28) for reference, ask the customer in as much detail as possible about the problem.

[2] WARNING LIGHT CHECK

Check the airbag warning light. If the light remains on, a malfunction is stored in the center airbag sensor assembly, so proceed to step [3]. If the airbag warning light is not on, a malfunction has occurred in the airbag warning light circuit, so perform troubleshooting for code 22.

HINT: Code 22 is recorded when a malfunction occurs in the airbag warning light system.
If an open malfunction occurs in the airbag warning light system, the airbag warning light does not light up, so that until the malfunction is repaired, the diagnostic codes (including code 22) cannot be confirmed.

[3] DIAGNOSTIC CODE CHECK AND RECORDING

Check the diagnostic codes and make a note of any malfunction codes which are output. If a normal code is output, an abnormality in the power source circuit may have occurred, so perform troubleshooting for source voltage in step [8].

If code 22 is output, skip steps [4] and [5] and proceed to step [7].

[4] CLEARING OF MALFUNCTION CODE (EXCEPT CODE 41)

Clear the malfunction code.

HINT: The malfunction code output in step [3] indicates that a malfunction has occurred in the circuit designated by the malfunction code, but does not indicate whether the malfunction is still occurring or whether it was in the past.
Accordingly, it is necessary to find out the present condition of the malfunction occurrence by clearing the malfunction code and performing the diagnostic code check again. If this operation is neglected and troubleshooting is performed using only the malfunction code confirmed in step [3], isolating the problem component becomes difficult and invites mistaken diagnosis.

[5] DIAGNOSTIC CODE CHECK AND RECORDING [6] SYMPTOM SIMULATION

After repeating ignition switch ON – OFF operation (ON: wait 20 secs., OFF: wait 20 secs.) 5 times, check the diagnostic code. If any code other than code 41 is output, the malfunction is still occurring, so proceed to step [7].

If code 41 only is output, the following three cases are possible:

- Intermittent trouble occurred previously, but it is now normal.
- The problem has been corrected, but clearing of code 41 has been forgotten.
- There is a malfunction in the circuit for code 41.

Focusing on the circuit of the malfunction code stored in step [3], use the simulation method in step [6] in order to simulate the malfunction. If the malfunction occurs, proceed to step [7]; if not, proceed to step [12].

NOTICE: When connecting the battery after clearing the malfunction code, always do it with the ignition switch in LOCK position.
When the battery has been reconnected, turn the ignition switch to ACC or ON position after at least 2 seconds have elapsed.
If the battery is reconnected with the ignition switch in ACC or ON position, or the ignition switch is turned to ACC or ON within 2 seconds of connecting the battery, it is possible that the diagnosis system will not operate normally.

HINT: Determine the malfunction in the airbag system in step [6] by whether or not a malfunction code other than code 41 is output.

[7] DIAGNOSTIC CODE CHART

Proceed to the appropriate flow chart in step [8] in accordance with the malfunction code found in step [5] or [6].

[8] CIRCUIT INSPECTION [9] REPAIR

Find out if the problem lies in a sensor, actuator or wire harness and connector, and repair the problem. After the problem part is repaired, reinstall the disassembled parts. Do not start work until at least 20 seconds after the ignition switch is turned to the LOCK position and the negative (–) terminal cable is disconnected.

CAUTION: If incorrect procedure is used, a malfunction may occur in the system or there is the danger that the airbag may be accidentally activated during the repair operation. Carefully read the GENERAL DESCRIPTION (See page AB-2) and the cautions for each operation, and perform repairs in the correct order using the correct methods.

HINT: The following illustration for the CIRCUIT INSPECTION shows each connector for the circuit from the center airbag sensor assembly to the steering wheel pad (squib).

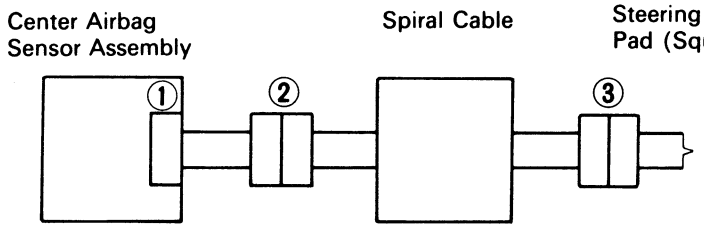

AB0091

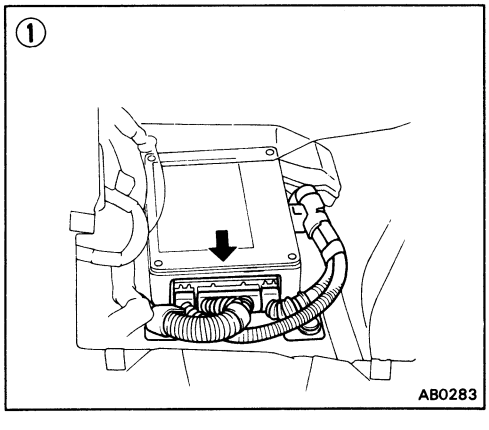

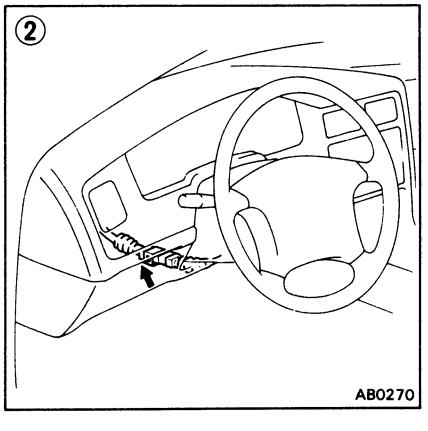

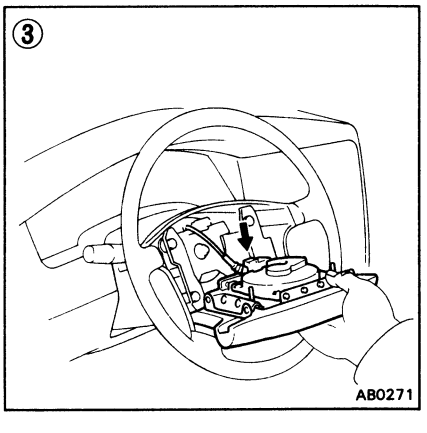

[10] CLEARING OF MALFUNCTION CODE (EXCEPT CODE 41)

When all the malfunction codes found in steps [5] and [6] have been repaired, clear the malfunction codes.

11 DIAGNOSTIC CODE CHECK

After repeating ignition switch ON – OFF operation (ON: wait 20 secs., OFF: wait 20 secs.) 5 times, check the diagnostic codes. If only code 41 is displayed, proceed to step 12 . If a code other than 41 is displayed, return to step 7 and troubleshoot the displayed malfunction code.

NOTICE: When connecting the battery after clearing the malfunction code, always do it with the ignition switch in LOCK position.
When the battery has been reconnected, turn the ignition switch to ACC or ON position after at least 2 seconds have elapsed.
If the battery is reconnected with the ignition switch in ACC or ON position, or the ignition switch is turned to ACC or ON within 2 seconds of connecting the battery, it is possible that the diagnosis system will not operate normally.

12 CLEARING OF MALFUNCTION CODE 41 STORED IN MEMORY

Clear malfunction code 41 stored in memory. This operation is not necessary only in case that the power source voltage returns to normal.

13 CONFIRMATION TEST

Check the warning light again and confirm that all the malfunctions have been repaired. If the warning light indicates an abnormality, repeat the operation again from step 2 . If code 41 is output at step 3 , skip steps 4 and 5 and proceed to step 7 .

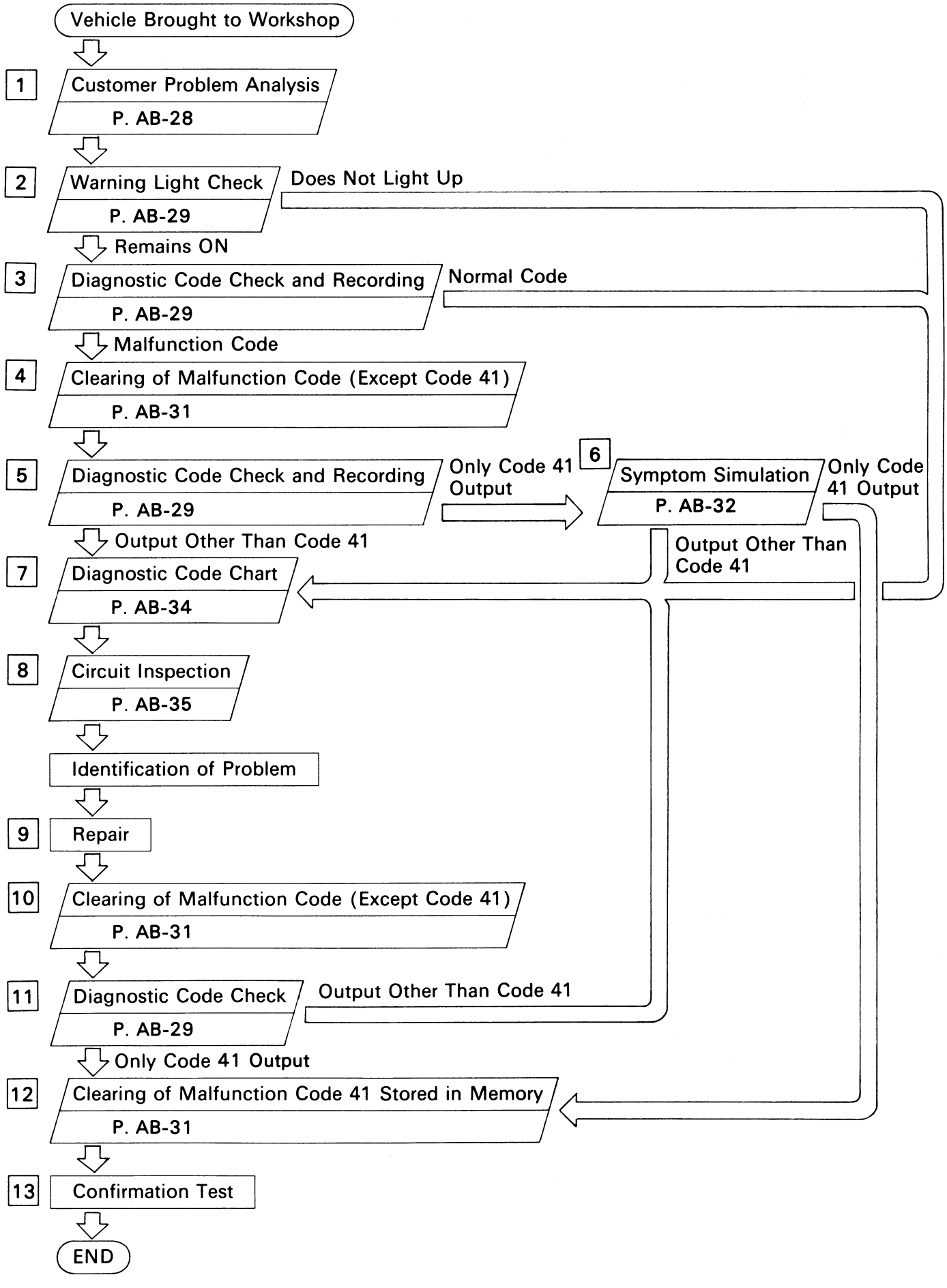
Vehicle Brought to Workshop
1
Customer Problem Analysis
P. AB-28
2
Warning Light Check
P. AB-29
Does Not Light Up
Remains ON
3
Diagnostic Code Check and Recording
P. AB-29
Normal Code
Malfunction Code
4
Clearing of Malfunction Code (Except Code 41)
P. AB-31
5
Diagnostic Code Check and Recording
P. AB-29
Only Code 41 Output
6
Symptom Simulation
P. AB-32
Only Code 41 Output
Output Other Than Code 41
Output Other Than Code 41
7
Diagnostic Code Chart
P. AB-34
8
Circuit Inspection
P. AB-35
Identification of Problem
9
Repair
10
Clearing of Malfunction Code (Except Code 41)
P. AB-31
11
Diagnostic Code Check
P. AB-29
Output Other Than Code 41
Only Code 41 Output
12
Clearing of Malfunction Code 41 Stored in Memory
P. AB-31
13
Confirmation Test
END

Customer Problem Analysis Check Sheet

SRS AIRBAG System Check Sheet

Inspector's Name :

Customer's Name		Registration No.	
		Registration Year	/ /
		Frame No.	
Date Vehicle Brought In	/ /	Odometer Reading	Miles

Date of Problem Occurrence		/ /
Conditions at Time of Problem Occurrence	Weather	☐ Fine ☐ Cloudy ☐ Rainy ☐ Snowy ☐ Various/Other
	Outdoor Temperature	☐ Hot ☐ Warm ☐ Cool ☐ Cold (Approx. °C (°F))
	Vehicle Operation	☐ Starting ☐ Idling ☐ Driving [☐ Constant speed ☐ Acceleration ☐ Deceleration ☐ Other ( )]
	Condition of road	

Details of Problem	
Vehicle Inspection, Repair History Prior to Occurrence of Malfunction (Including Airbag System)	

(Diagnosis System Inspection)

Airbag Warning Light Inspection	1st Time	☐ Remains On ☐ Sometimes Lights Up ☐ Does Not Light Up
	2nd Time	☐ Remains ON ☐ Sometimes Lights Up ☐ Does Not Light Up
Diagnostic Code Inspection	1st Time	☐ Normal Code ☐ Malfunction Code [Code.]
	2nd Time	☐ Normal Code ☐ Malfunction Code [Code.]

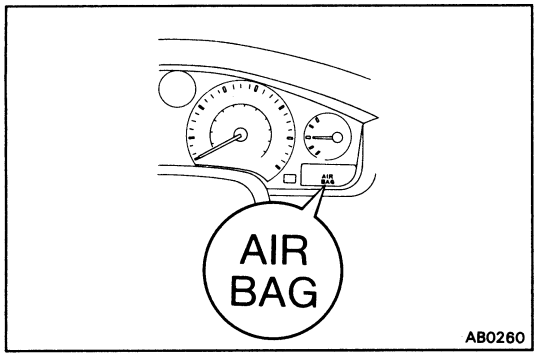

Diagnosis Inspection

AIRBAG WARNING LIGHT CHECK

(a) Turn the ignition switch to ACC or ON and check that the airbag warning light lights up.

(b) Check that the airbag warning light goes out after approx. 6 seconds.

HINT:

- When the ignition switch is at ACC or ON and the airbag warning light remains on, the center airbag sensor assembly has detected a malfunction code.
- If, after approx. 6 seconds have elapsed, the airbag warning light sometimes lights up or the airbag warning light lights up even when the ignition switch is OFF, a short in the airbag warning light circuit can be considered likely.
  Proceed to "Airbag warning light system (always lit up)" on page AB-75.

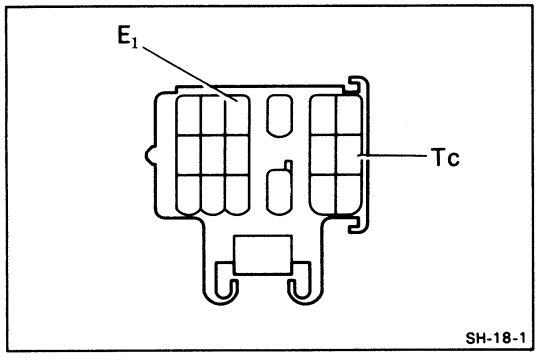

DIAGNOSTIC CODE CHECK

1. OUTPUT DIAGNOSTIC CODE

(a) Turn the ignition switch to ACC or ON position and wait approx. 20 seconds.

(b) Using SST, connect terminals T_C and E_1 of the check connector.

SST 09843-18020

NOTICE: Never make a mistake with the terminal connection position as this will cause a malfunction.

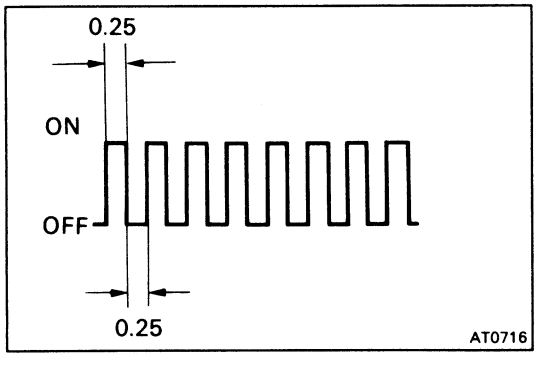

2. READ DIAGNOSTIC CODE

Read the diagnostic code as indicated by the number of times the airbag warning light blinks.

- **Normal code indication**
  The light will blink 2 times per second.
- **Malfunction code indication**
  In the even of a malfunction, the light will blink.
  The first number of the code No. will equal the first digit of a 2-digit diagnostic code, and after a 1.5 second pause, the 2nd number of the code No. will equal the 2nd digit. If there are two or more codes, there will be a 2.5 second pause between each.
  After all the codes have been output, there will be a 4.0 second pause and they will all be repeated.
  HINT:
  - In the event of a number of trouble codes, indication will begin from the smaller numbered code to the larger.
  - If a diagnostic code is not output or is continuously output, proceed to the Tc terminal circuit inspection on page AB-77.

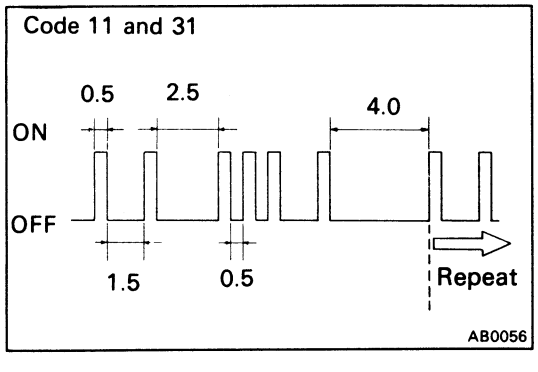

DIAGNOSTIC CODES

Code No.	Blink Pattern	Diagnosis	Trouble Area	AIRBAG Warning Light
(Normal)	FI1401	• System normal	–	OFF
		• Source voltage drop	• Battery • Center airbag sensor assembly	ON
11	AB0057	• Short in squib circuit or front airbag sensor circuit (to ground)	• Steering wheel pad (squib) • Front airbag sensor • Spiral cable • Center airbag sensor assembly • Wire harness	ON
12	FI1389	• Short in squib circuit or front airbag sensor circuit (to +B)	• Steering wheel pad (squib) • Front airbag sensor • Spiral cable • Center airbag sensor assembly • Wire harness	ON
13	FI1390	• Short in squib circuit (between D^+ wire harness and D^- wire harness)	• Steering wheel pad (squib) • Spiral cable • Center airbag sensor assembly • Wire harness	ON
14	FI1391	• Open in squib circuit	• Steering wheel pad (squib) • Spiral cable • Center airbag sensor assembly • Wire harness	ON
15	AB0058	• Open in front airbag sensor circuit	• Front airbag sensor • Center airbag sensor assembly • Wire harness	ON
22	FI1392	• Airbag warning light system malfunction	• Airbag warning light • Center airbag sensor assembly • Wire harness	ON
31	FI1394	• Center airbag sensor assembly malfunction	• Center airbag sensor assembly	ON
41	FI1396	• Malfunction stored in memory	• (Center airbag sensor assembly)	ON

HINT:

- When the airbag warning light remains lit up and the diagnostic code is the normal code, this means a source voltage drop.
  This malfunction is not stored in memory by the center airbag sensor assembly and if the power source voltage returns to normal, after approx. 10 seconds the airbag warning light will automatically go out.
- Code 22 is recorded when a malfunction occurs in the airbag warning light system.
  If an open malfunction occurs in the airbag warning light system, the airbag warning light does not light up, so that until the malfunction is repaired, the diagnostic codes (including code 22) cannot be confirmed.
- When a malfunction occurs in the airbag system, malfunction codes 11 to 31 are output. After repairing the malfunction indicated by malfunction codes 11 to 31, codes 11 to 31 are cleared from the memory, but code 41 is output instead.
  Once the malfunction has been detected, the airbag warning light will remain lit up until code 41 is cleared, even though the malfunction has been repaired.
- When two or more codes are indicated, the lowest numbered code will appear first.
- If a code not listed on the chart is displayed, then the center airbag sensor assembly is faulty.

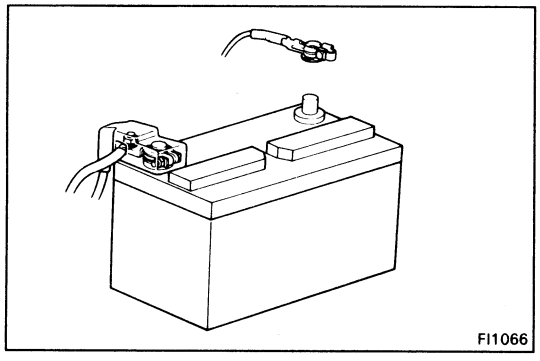

CLEARING OF DIAGNOSTIC CODE

1. CLEARING OF MALFUNCTION CODE (EXCEPT CODE 41)

Remove the battery negative terminal or ECU-B fuse for 10 seconds or more with the ignition switch OFF.

NOTICE: When connecting the battery after cancelling the malfunction code, always do it with the ignition switch in LOCK position. If the battery is connected with the ignition switch in ACC or ON position, there are cases when the diagnosis system does not operate normally.

HINT:

- Code 41 cannot be cleared by this method.
- The lower the temperature, the longer the battery negative terminal must be left off.
- Other memory systems (clock, audio system) will also be cancelled out (See page AB-2).

2. CLEARING OF MALFUNCTION CODE 41 STORED IN MEMORY

(a) Connect service wires to terminals Tc and AB of the check connector.

(b) Turn the ignition switch ACC or ON and wait approx. 6 seconds.

(c) Starting with the Tc terminal, apply body ground alternately to terminal Tc and terminal AB twice each in cycles of 1.0 ± 0.5 seconds.
Finally, keep applying body ground to terminal Tc.

HINT: When alternating between body ground of terminals Tc and AB release one from body ground while applying it to the other terminal. The time interval in between must be within the following conditions. If it is out of the conditions, code 41 will not be cleared.

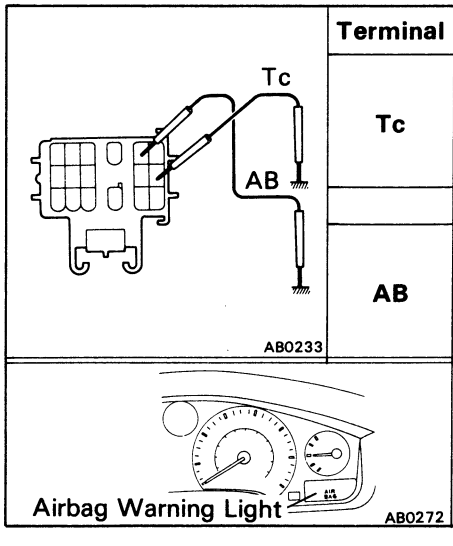

(d) After several seconds, when the airbag warning light starts to blink in a 64 msec. cycle, cancellation is completed.

HINT: This method clears not only code 41, but also other malfunction codes all at once.
Except when instructed by the troubleshooting procedure, use this method only when the repair procedure is completed (See page AB-24).

Symptom Simulation

"Intermittent troubles or problems" are the malfunctions about which the customer has a complaint, but which do not occur and can not be confirmed in the workshop. The intermittent problems also include complaints about the airbag warning light going on and off erratically.
The self-diagnostic system stores the circuit of the intermittent problem in memory even if the ignition switch is turned off.
And, for accurate diagnosis of the problems, ask the customer to obtain information as much as possible following the customer problem analysis check sheet (See page AB-28), and try to reproduce the intermittent problem.
The problem simulation methods described below are the effective ways for this nature of problem to produce the problem conditions by applying vibration, heat, and humidity.

1 VIBRATION METHOD: When vibration seems to be the major cause.

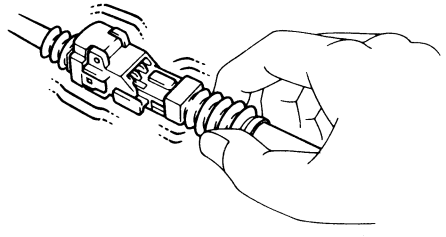

AB0245

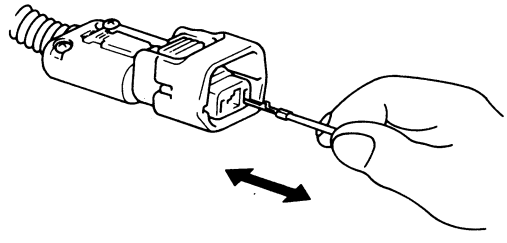

K9464

CONNECTORS

Slightly shake the connector vertically and horizontally.

(Inspection of connectors)

(a) Does the wire harness connecting with its corresponding part have insufficient slack?

(b) Are the terminals dirty?

(c) Are the terminals making loose contact due to terminals spread?

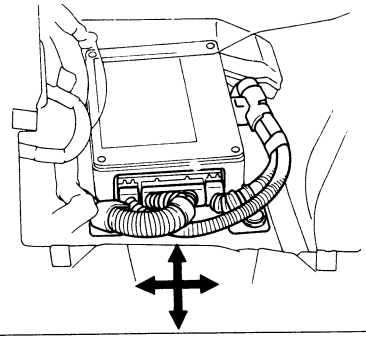

AB0283

WIRE HARNESS

Slightly shake the wire harness vartically and horizontally. The connector joint, fulcrum of the vibration, and body through portion are the major areas to be checked thoroughly.

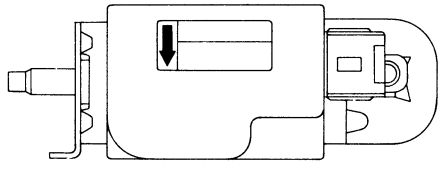

AB0255

PARTS AND SENSORS

Apply vibration slightly by a finger to the part or sensor considered to be the problem cause and check if the malfunction will occur.

CAUTION: Do not apply vibration to the center airbag sensor.

2 HEAT METHOD: When the problem seems to occur when the suspect area is heated.

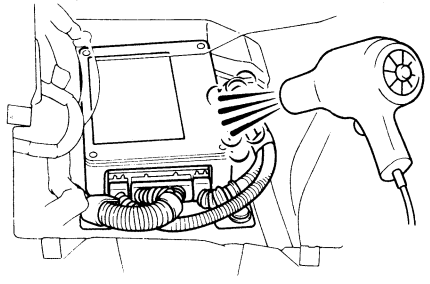

AB0273

Heat the component that is likely the cause of the malfunction with a hair dryer or similar object. Check to see if the malfunction will occur.

NOTICE:

- **Do not heat to more than 60°C (140°F) (Temperature limit that the component can be touched with a hand.).**
- **Do not apply heat directly to part in the ECU.**

3 WATER SPRINKLING METHOD: When the malfunction seems to occur on a rainy day or in a high-humidity condition.

AB0274

Sprinkle water onto the vehicle and check to see if the malfunction will occur.

NOTICE: Never apply water directly onto the electronic components.

HINT:

- If a vehicle is subject to water leakage, the leaked water may contaminate the ECU. When testing a vehicle with a water leakage problem, special caution must be paid.

4 OTHER: When a malfunction seems to occur when electrical load is excessive.

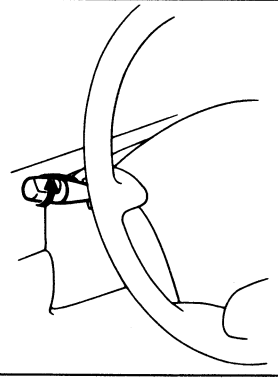

AB0234

Turn on all electrical loads including the heater blower, headlights, rear window defogger, etc. and check to see if the malfunction will occur.

Diagnostic Code Chart

If a malfunction code is displayed during the diagnostic code check, check the circuit listed for that code in the table below (Proceed to the page given for that circuit).

Code No.	Diagnosis	Page
(Normal) *1	• Source voltage drop	AB-35
11	• Short in squib circuit or front airbag sensor circuit (to ground)	AB-37
12	• Short in squib circuit or front airbag sensor circuit (to +B)	AB-43
13	• Short in squib circuit (between D^+ wire harness and D^- wire harness)	AB-48
14	• Open in squib circuit	AB-55
15	• Open in front airbag sensor circuit	AB-60
22 *2	• Airbag warning light system malfunction	AB-65
31	• Center airbag sensor assembly malfunction	AB-71
41 *3	• Malfunction stored in memory	AB-73

HINT:

*1 When the airbag warning light remains lit up and the diagnostic code is the normal code, this means a source voltage drop.

*2 Code 22 is recorded when a malfunction occurs in the airbag warning light system.
If an open malfunction occurs in the airbag warning light system, the airbag warning light does not light up, so that until the malfunction is repaired, the diagnostic codes (including code 22) cannot be confirmed.

*3 When a malfunction occurs in the airbag system, malfunction codes 11 to 31 are output. After repairing the malfunction indicated by malfunction codes 11 to 31, codes 11 to 31 are cleared from the memory, but code 41 is output instead.
Once the malfunction has been detected, the airbag warning light will remain lit up until code 41 is cleared, even though the malfunction has been repaired.

Problem Symptom Chart

Proceed with troubleshooting of each circuit in the table below.

Problem Symptom	Inspection Item	Page
• With the ignition switch at ACC or ON, the airbag warning light sometimes light up after approx. 6 seconds have elapsed. • Airbag warning light lights up even when ignition switch is in the LOCK position.	• Airbag warning light system (Always lit up)	AB-75
• Diagnostic code not displayed. • Diagnostic code continuously displayed.	• Tc terminal circuit	AB-77

Circuit Inspection

Diag. Code	(Normal)	Source Voltage Drop

CIRCUIT DESCRIPTION

The airbag system is equipped with a voltage-increase circuit (DC-DC converter) in the center airbag sensor assembly in case the source voltage drops.
When the battery voltage drops, the voltage-increase circuit (DC-DC converter) functions to increase the voltage of the airbag system to normal voltage.
The diagnosis system malfunction display for this circuit is different to other circuits — when the airbag warning light remains lit up and the diagnostic code is a normal code, source voltage drop is indicated.
Malfunction in this circuit is not recorded in the center airbag sensor assembly, and approx. 10 seconds after the source voltage returns to normal, the airbag warning light automatically goes off.

Code No.	Diagnosis
(Normal)	Source voltage drop.

DIAGNOSTIC CHART

1 Preparation.

2 Does airbag warning light turn off after approx. 10 seconds?

No → Check diagnostic code, and if a malfunction code is output, perform troubleshooting according to malfunction code. If a normal code is output, replace center airbag sensor assembly.

Yes → Check battery and charging system (See page CH-1).

WIRING DIAGRAM

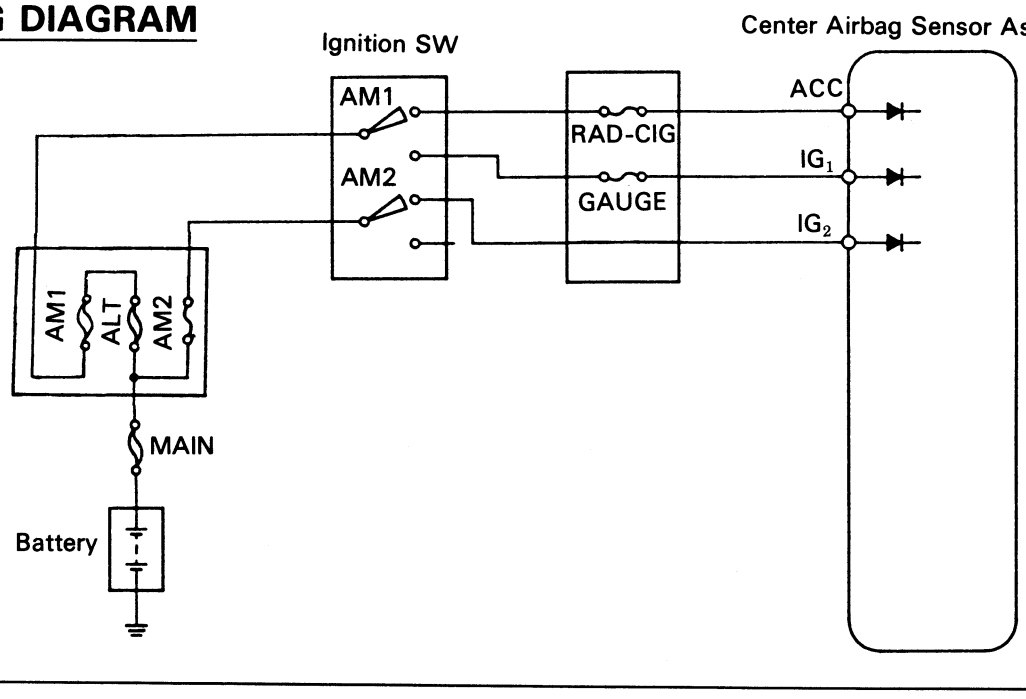

INSPECTION PROCEDURES

P Preparation C Check

1 Preparation.

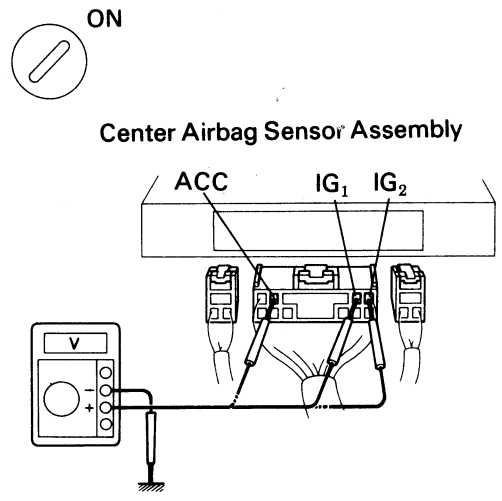

P (1) Turn ignition switch LOCK.
(2) Disconnect center airbag sensor assembly connector.
(3) Turn ignition switch ON. But do not start engine.
(4) Measure voltage at IG_1, IG_2 or ACC on connector wire harness side of center airbag sensor assembly and operate electric system (defogger, wiper, headlight, heater blower, etc.).
Voltage: 6V – 11.5V at IG_1, IG_2 and ACC.
(5) Turn electric system switch OFF.
(6) Turn ignition switch LOCK.
(7) Remove voltmeter and connect center airbag sensor assembly connector.

2 Does airbag warning light turn off after approx. 10 seconds?

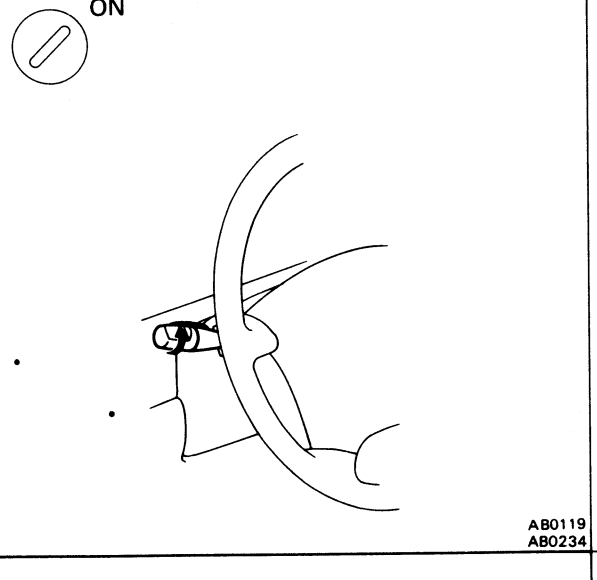

P Turn ignition switch ON.

C Operate electric system checked in 1 (4) and check that airbag warning light goes off after approx. 10 seconds.

YES

NO

Check diagnostic code, and if a malfunction code is output, perform troubleshooting according to malfunction code. If a normal code is output, replace center airbag sensor assembly.

Check battery and charging system (See page CH-1).

Diag. Code	11	Short in Squib Circuit or Front Airbag Sensor Circuit (to Ground)

CIRCUIT DESCRIPTION

The squib circuit consists of the center airbag sensor assembly, spiral cable and the steering wheel pad (squib). It causes the airbag to deploy when the airbag deployment conditions are satisfied.
The front airbag sensor detects the deceleration force in a frontal collision and is located in the radiator upper support.
For details of the function of each component, see FUNCTION OF COMPONENTS on page AB-7.
Diagnostic code 11 is recorded when occurrence of ground short is detected in the squib circuit or front airbag sensor circuit.

Code No.	Diagnosis
11	· Short circuit in squib wire harness (to ground). · Squib malfunction. · Short circuit in front airbag sensor +S wire harness (to ground). · Front airbag sensor malfunction. · Short circuit between +S wire harness and −S wire harness of front airbag sensor. · Spiral cable malfunction. · Center airbag sensor assembly malfunction.

DIAGNOSTIC CHART

1 Preparation.

↓

2 Check front airbag sensor circuit. (Measure resistance between terminals +SR and −SR, +SL and −SL of center airbag sensor assembly connector.)
NG → Go to step 7 on next page.

↓ OK

3 Check front airbag sensor circuit. (Measure resistance between terminals + SR, +SL of center airbag sensor assembly connector and body ground.)
NG → Repair or replace harness or connector between center airbag sensor assembly and front airbag sensor (See page AB-21).

↓ OK

4 Check squib circuit.
NG → Go to step 8 on next page.

↓ OK

5 Check center airbag sensor assembly.
NG → Replace center airbag sensor assembly.

↓ OK

6 Check squib.
NG → Replace steering wheel pad.

↓ OK

From the results of the above inspection, the malfunctioning part can now be considered normal. To make sure of this, use the simulation method to check.

DIAGNOSTIC CHART (Cont'd)

7 Check front airbag sensor.

NG → Replace front airbag sensor.

OK

Repair or replace harness or connector between center airbag sensor assembly and front airbag sensor (See page AB-21).

8 Check spiral cable.

NG → Repair or replace spiral cable.

OK

Repair or replace harness or connector between center airbag sensor assembly and spiral cable.

WIRING DIAGRAM

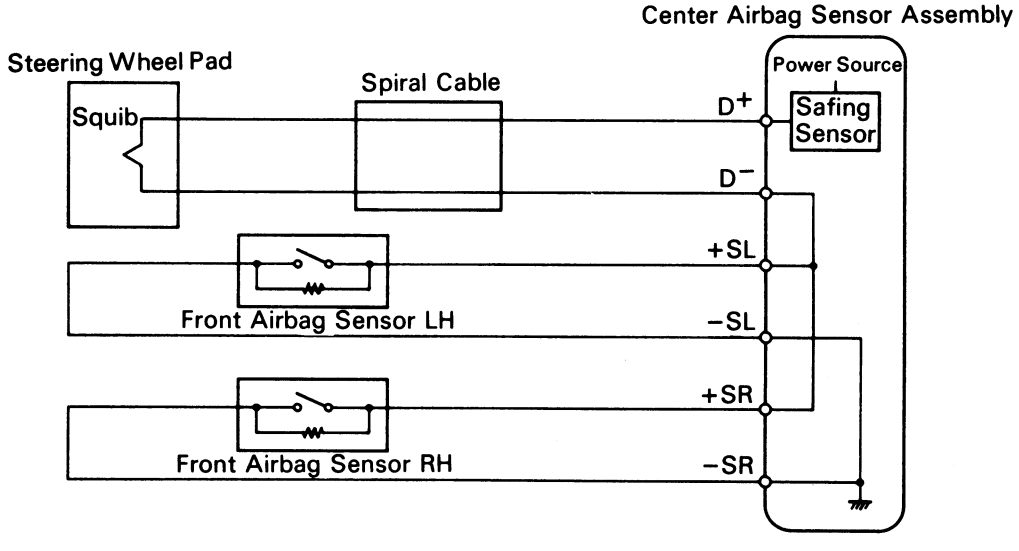

AB0190

INSPECTION PROCEDURES

P Preparation C Check

1 Preparation.

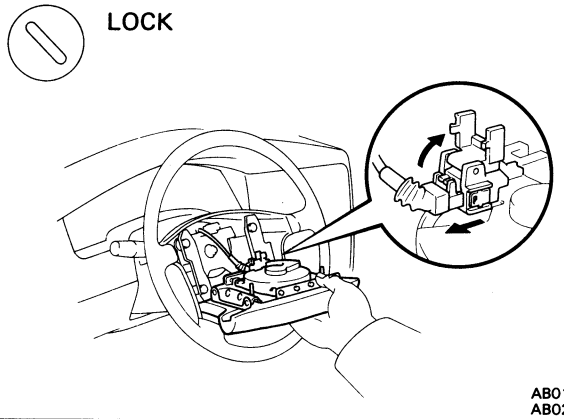

AB0117
AB0267

P (1) Disconnect battery negative (–) terminal cable, and wait at least 20 seconds.
(2) Remove steering wheel pad (See page AB-15).

Caution

When storing steering wheel pad, keep upper surface of the pad facing upward.

2 Check front airbag sensor circuit. (Measure resistance between terminals +SR and –SR, +SL and –SL of center airbag sensor assembly connector.)

Center Airbag Sensor Assembly

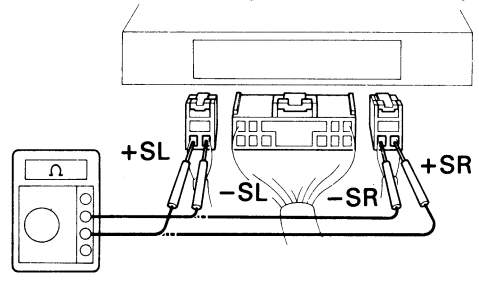

AB0097

P Disconnect center airbag sensor assembly connectors.

C Measure resistance between terminals +SR and –SR, +SL and –SL of harness side connector of center airbag sensor assembly.

OK Resistance: 755 Ω – 885 Ω

OK

NG Go to step 7.

3 Check front airbag sensor circuit. (Measure resistance between terminals +SR, +SL of center airbag sensor assembly connector and body ground.)

Center Airbag Sensor Assembly

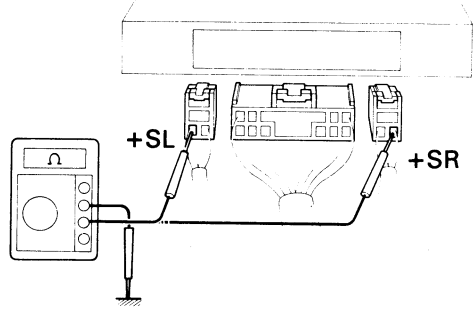

AB0096

C Measure resistance between terminals +SR, +SL of harness side connector of center airbag sensor assembly and body ground.

OK Resistance: ∞ Ω

OK

NG **Repair or replace harness or connector between center airbag sensor assembly and front airbag sensor (See page AB-21).**

4 Check squib circuit.

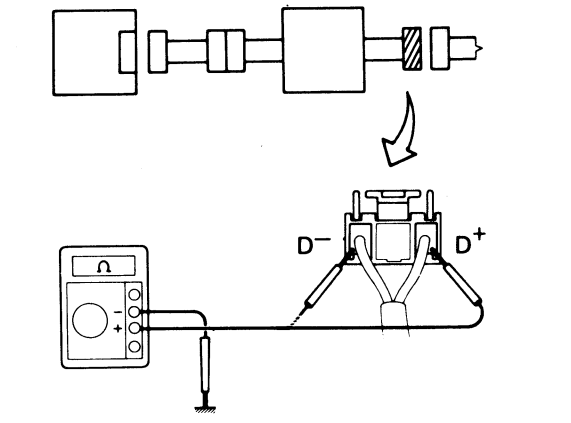

C Measure resistance between D^+, D^- on spiral cable side of connector between spiral cable and steering wheel pad and body ground.

OK **Resistance:** ∞ Ω

OK

NG > **Go to step 8.**

5 Check center airbag sensor assembly.

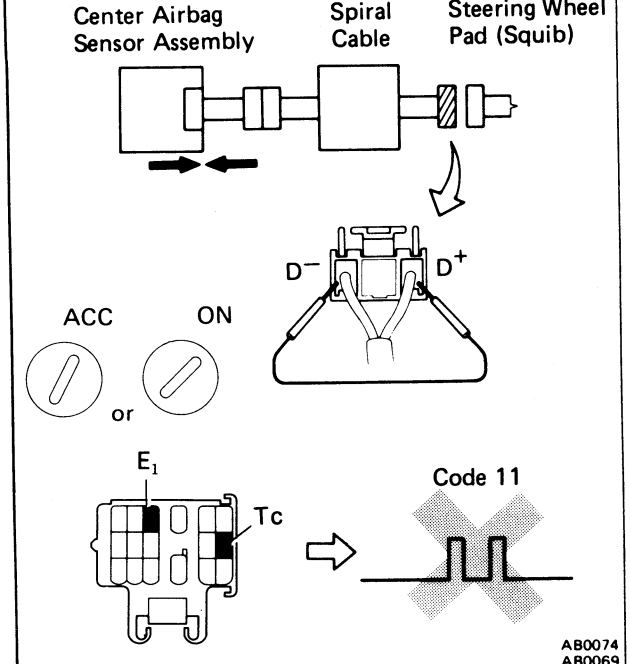

P (1) Connect connectors to center airbag sensor assembly.
(2) Using a service wire, connect D^+ and D^- on spiral cable side of connector between spiral cable and steering wheel pad.
(3) Connect negative (−) terminal cable to battery, and wait at least 2 seconds.

C (1) Turn ignition switch ACC or ON and wait at least 20 seconds.
(2) Using SST, connect terminals Tc and E_1 of check connector.
SST 09843-18020
(3) Check diagnostic code.

OK **Diagnostic code 11 is not output.**

Hint Codes other than code 11 may be output at this time, but this is not relevant to this check.

OK

NG > **Replace center airbag sensor assembly.**

6 Check squib.

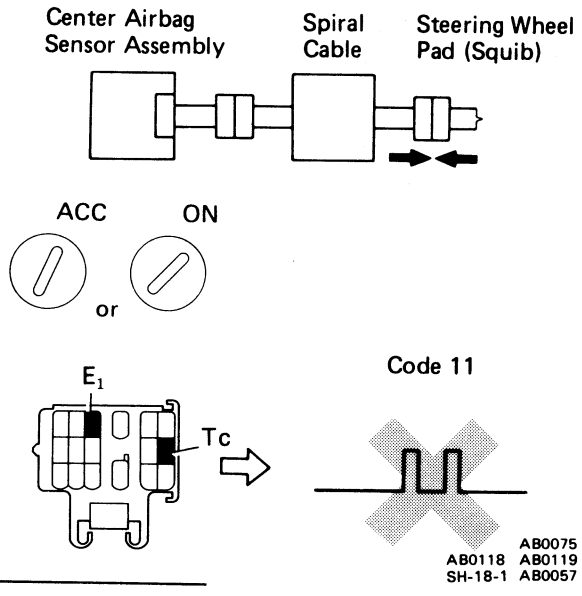

P (1) Turn ignition switch LOCK.
(2) Disconnect battery negative (–) terminal cable, and wait at least 20 seconds.
(3) Connect steering wheel pad (squib) connector.
(4) Connect negative (–) terminal cable to battery, and wait at least 2 seconds.

C (1) Turn ignition switch ACC or ON, and wait at least 20 seconds.
(2) Using SST, connect terminals Tc and E_1 of check connector.
SST 09843-18020
(3) Check diagnostic code.

OK **Diagnostic code 11 is not output.**

Hint Codes other than code 11 may be output at this time, but this is not relevant to this check.

NG → **Replace steering wheel pad.**

OK

From the results of the above inspection, the malfunctioning part can now be considered normal. To make sure of this, use the simulation method to check.

7 Check front airbag sensor.

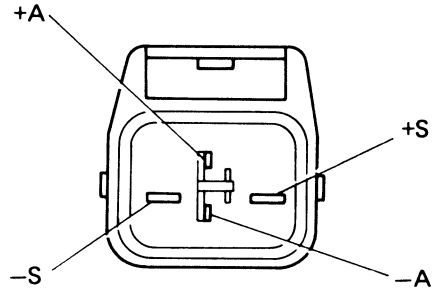

P Disconnect front airbag sensor connector.

C Measure resistance between each terminal of front airbag sensor.

OK

Terminal	Resistance
⊕ S – ⊕ A	755 Ω – 885 Ω
⊕ S – ⊖ S	∞
⊖ S – ⊖ A	Less than 1 Ω

Notice

- **Do not touch ohmmeter probes strongly against terminals of front airbag sensor.**
- **Make sure the front airbag sensor connector is properly connected.**

NG → **Replace front airbag sensor.**

OK

Repair or replace harness or connector between center airbag sensor assembly and front airbag sensor (See page AB-21).

8 Check spiral cable.

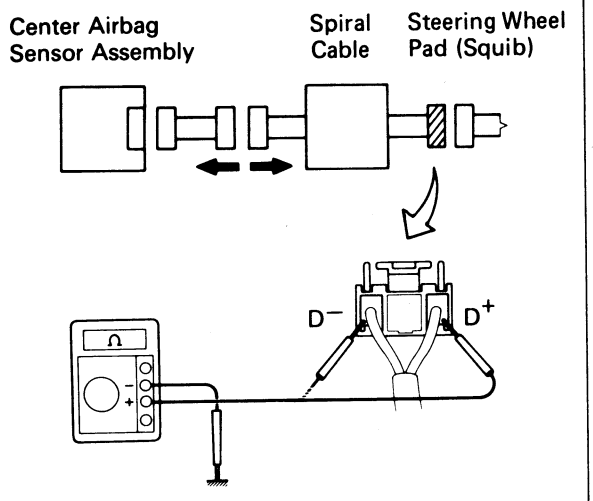

P Disconnect connector between center airbag sensor assembly and spiral cable.

C Measure resistance between D^+, D^- on spiral cable side of connector between spiral cable and steering wheel pad and body ground.

OK **Resistance:** ∞ Ω

NG → **Repair or replace spiral cable.**

OK

Repair or replace harness or connector between center airbag sensor assembly and spiral cable.

Diag. Code	12	Short in Squib Circuit or Front Airbag Sensor Circuit (to +B)

CIRCUIT DESCRIPTION

The squib circuit consists of the center airbag sensor assembly, spiral cable and the steering wheel pad (squib). It causes the airbag to deploy when the airbag deployment conditions are satisfied.
The front airbag sensor detects the deceleration force in a frontal collision and is located in the radiator upper support.
For details of the function of each component, see FUNCTION OF COMPONENTS on page AB-7.
Diagnostic code 12 is recorded when a +B short is detected in the squib circuit or the front airbag sensor circuit.

Code No.	Diagnosis
12	· Short circuit in squib wire harness (to +B). · Squib malfunction. · Short circuit in front airbag sensor +S wire harness (to +B). · Open circuit in RH and LH front airbag sensor harness. · Spiral cable malfunction. · Center airbag sensor assembly malfunction.

DIAGNOSTIC CHART

1 Preparation.

2 Check front airbag sensor circuit. (Measure resistance between terminals +SR and −SR, +SL and −SL of center airbag sensor assembly connector.)
- NG → Go to Code 15(See page AB-60).
- OK ↓

3 Check front airbag sensor circuit. (Measure voltage between terminal +SR or +SL of center airbag sensor assembly connector and body ground.)
- NG → Repair or replace harness or connector between center airbag sensor assembly and front airbag sensor (See page AB-21).
- OK ↓

4 Check squib circuit.
- NG → Go to step 7.
- OK ↓

5 Check center airbag sensor assembly.
- NG → Replace center airbag sensor assembly.
- OK ↓

6 Check squib.
- NG → Replace steering wheel pad.
- OK ↓

From the results of the above inspection, the malfunctioning part can now be considered normal. To make sure of this, use the simulation method to check.

7 Check spiral cable.
- NG → Repair or replace spiral cable.
- OK ↓

Repair or replace harness or connector between center airbag sensor assembly and spiral cable.

WIRING DIAGRAM

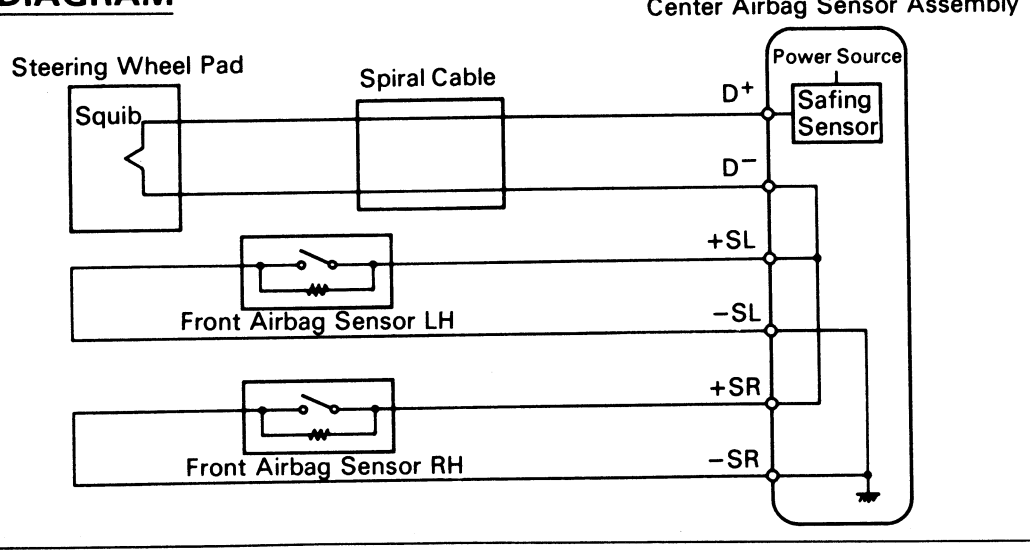

INSPECTION PROCEDURES

P Preparation C Check

1 Preparation.

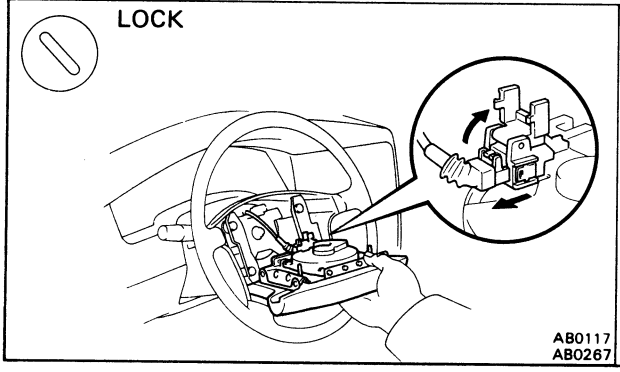

AB0117
AB0267

P (1) Disconnect battery negative (—) terminal cable, and wait at least 20 seconds.
(2) Remove steering wheel pad (See page AB-15).

Caution

When storing steering wheel pad, keep upper surface of the pad facing upward.

2 Check front airbag sensor circuit. (Measure resistance between terminals +SR and —SR, +SL and —SL of center airbag sensor assembly connector.)

Center Airbag Sensor Assembly

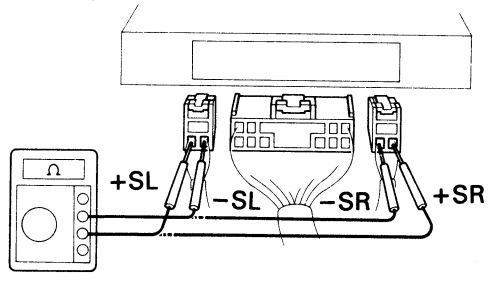

AB0097

P Disconnect center airbag sensor assembly connectors.

C Measure resistance between terminals +SR and —SR, +SL and —SL of harness side connector of center airbag sensor assembly.

OK **Resistance: 755 Ω — 885 Ω**

OK

NG Go to Code 15 (See page AB-60).

3 Check front airbag sensor circuit. (Measure voltage between terminal +SR or +SL of center airbag sensor assembly connector and body ground.)

ON

Center Airbag Sensor Assembly

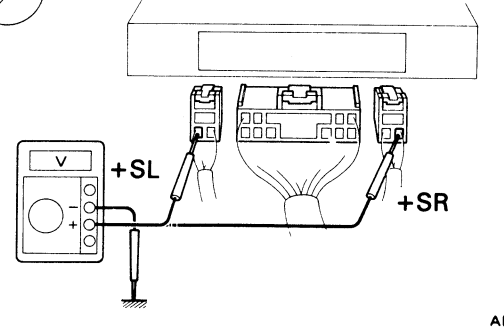

AB0119
AB0095

P (1) Connect negative (—) terminal cable to battery.
(2) Turn ignition switch ON.

C Measure voltage between terminals +SR or +SL of harness side connector of center airbag sensor assembly and body ground.

OK **Voltage: 0 V**

OK

NG Repair or replace harness or connector between center airbag sensor assembly and front airbag sensor (See page AB-21).

4 Check squib circuit.

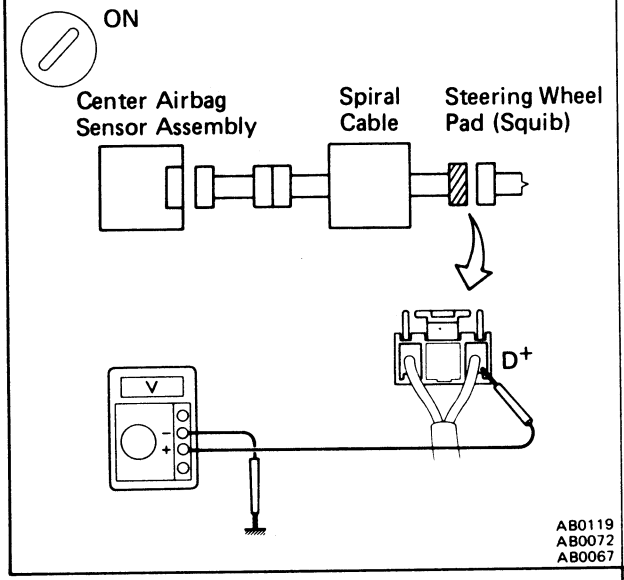

C Measure voltage at D^+ on spiral cable side of connector between spiral cable and steering wheel pad.

OK **Voltage: 0 V**

OK

NG Go to step 7 .

5 Check center airbag sensor assembly.

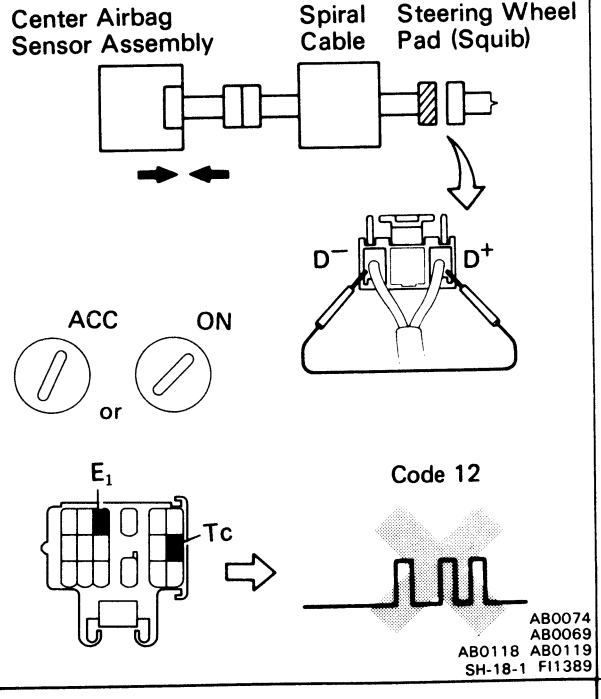

P (1) Turn ignition switch LOCK.
(2) Disconnect negative (−) terminal cable from battery.
(3) Connect connectors to center airbag sensor assembly.
(4) Using a service wire, connect D^+ and D^- on spiral cable side of connector between spiral cable and steering wheel pad.
(5) Connect negative (−) terminal cable to battery, and wait at least 2 seconds.

C (1) Turn ignition switch ACC or ON, and wait at least 20 seconds.
(2) Using SST, connect terminals Tc and E_1 of check connector.
SST 09843-18020
(3) Check diagnostic code.

OK **Diagnostic code 12 is not output.**

Hint Codes other than code 12 may be output at this time, but this is not relevant to this check.

OK

NG **Replace center airbag sensor assembly.**

6 Check squib.

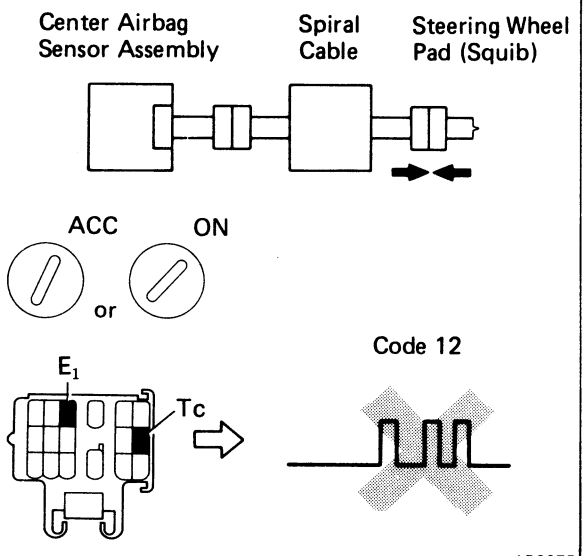

P (1) Turn ignition switch LOCK.
(2) Disconnect battery negative (–) terminal cable, and wait at least 20 seconds.
(3) Connect steering wheel pad (squib) connector.
(4) Connect negative (–) terminal cable to battery, and wait at least 2 seconds.

C (1) Turn ignition switch ACC or ON, and wait at least 20 seconds.
(2) Using SST, connect terminals Tc and E_1 of check connector.
SST 09843-18020
(3) Check diagnostic code.

OK **Diagnostic code 12 is not output.**

Hint Codes other than code 12 may be output at this time, but this is not relevant to this check.

OK

NG **Replace steering wheel pad.**

From the results of the above inspection, the malfunctioning part can now be considered normal. To make sure of this, use the simulation method to check.

7 Check spiral cable.

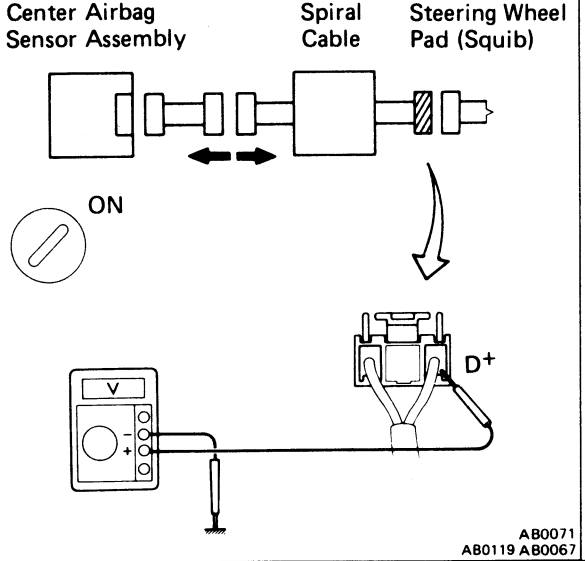

P (1) Turn ignition switch LOCK.
(2) Disconnect connector between center airbag sensor assembly and spiral cable.
(3) Turn ignition switch ON.

C Measure voltage at D^+ on spiral cable side of connector between spiral cable and steering wheel pad.

OK **Voltage: 0 V**

OK

NG **Repair or replace spiral cable.**

Repair or replace harness or connector between center airbag sensor assembly and spiral cable.

Diag. Code	13	Short in Squib Circuit (Between D^+ Wire Harness and D^- Wire Harness)

CIRCUIT DESCRIPTION

The squib circuit consists of the center airbag sensor assembly, spiral cable and the steering wheel pad (squib). It causes the airbag to deploy when the airbag deployment conditions are satisfied.
For details of the function of each component, see FUNCTION OF COMPONENTS on page AB-7.
Diagnostic code 13 is recorded when a short is detected in the D^+ wire harness and D^- wire harness of the squib circuit.

Code. No.	Diagnosis
13	· Short circuit between D^+ wire harness and D^- wire harness of squib. · Squib malfunction. · Spiral cable malfunction. · Center airbag sensor assembly malfunction.

DIAGNOSTIC CHART

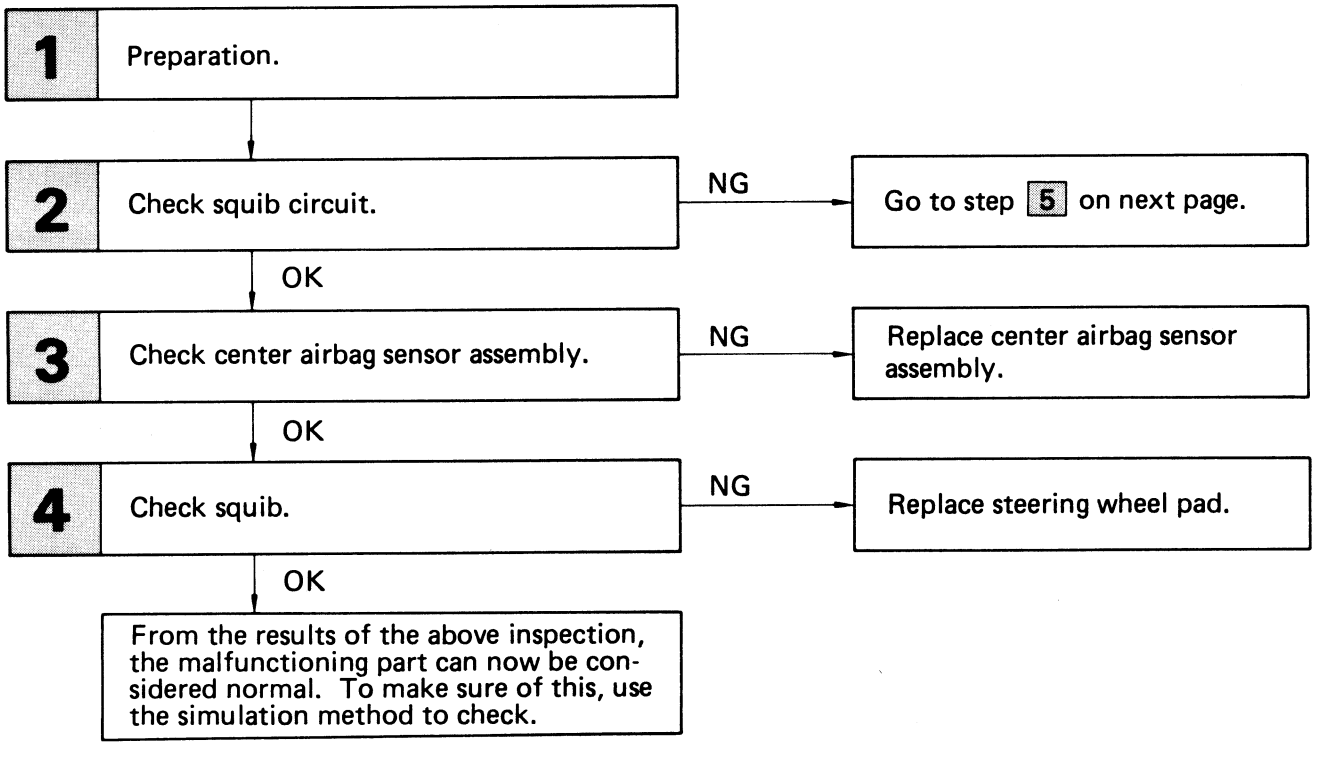

DIAGNOSTIC CHART (Cont'd)

5 Check spiral cable.
- NG → Repair or replace spiral cable.
- OK ↓

6 Check harness between center airbag sensor assembly and spiral cable.
- NG → Repair or replace harness or connector between center airbag sensor assembly and spiral cable.
- OK ↓

7 Check center airbag sensor assembly.
- NG → Replace center airbag sensor assembly.
- OK ↓

From the results of the above inspection, the malfunctioning part can now be considered normal. To make sure of this, use the simulation method to check.

WIRING DIAGRAM

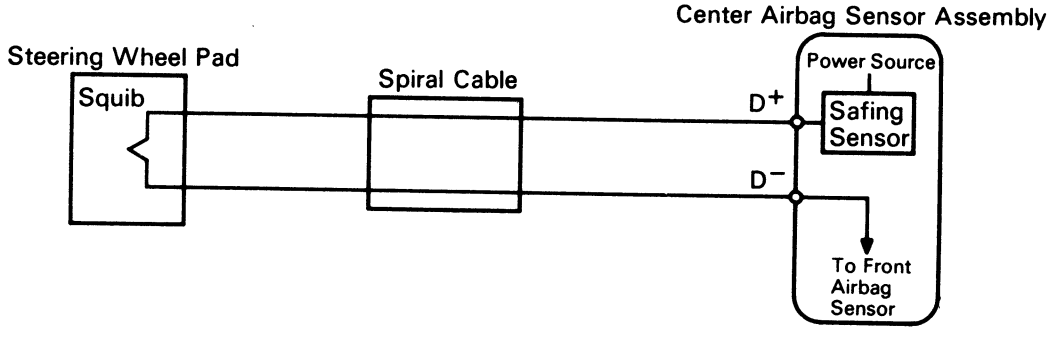

AB0191

INSPECTION PROCEDURES

P Preparation C Check

1 Preparation.

LOCK

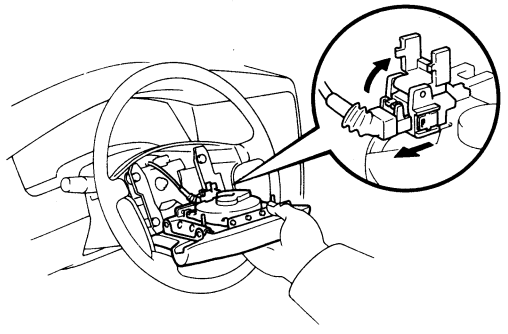

AB0117
AB0267

P (1) Disconnect battery negative (—) terminal cable, and wait at least 20 seconds.
(2) Remove steering wheel pad (See page AB-15).

Caution

When storing steering wheel pad, keep upper surface of the pad facing upward.

2 Check squib circuit.

Center Airbag Sensor Assembly | Spiral Cable | Steering Wheel Pad (Squib)

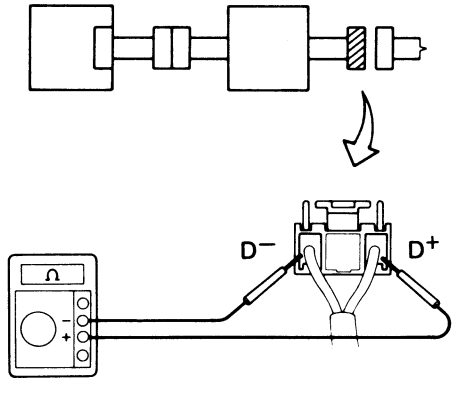

AB0074
AB0068

C Measure resistance between D^+ and D^- on spiral cable side of connector between spiral cable and steering wheel pad.

OK **Resistance: 1 kΩ or more**

OK

NG Go to step 5 .

3 Check center airbag sensor assembly.

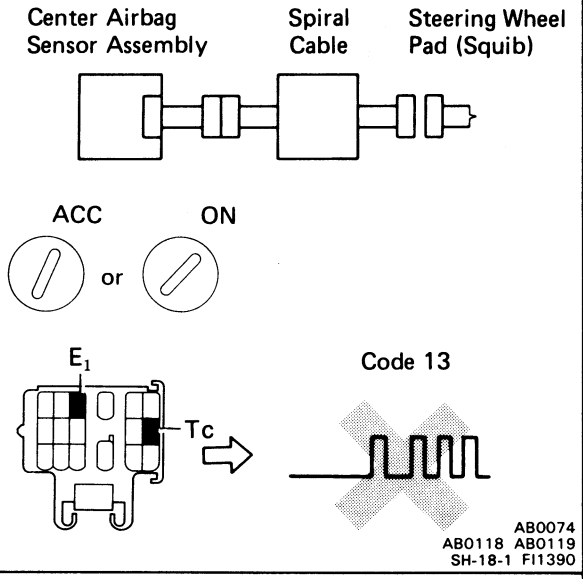

P (1) Connect negative (–) terminal cable to battery.
(2) Clear malfunction code 41 stored in memory (See page AB-31).

C (1) Turn ignition switch LOCK, and wait at least 2 seconds.
(2) Turn ignition switch ACC or ON, and wait at least 20 seconds.
(3) Using SST, connect terminals Tc and E_1 of check connector.
SST 09843-18020
(4) Check diagnostic code.

OK **Diagnostic code 13 is not output.**

Hint Codes other than code 13 may be output at this time, but this is not relevant to this check.

OK

NG > **Replace center airbag sensor assembly.**

4 Check squib.

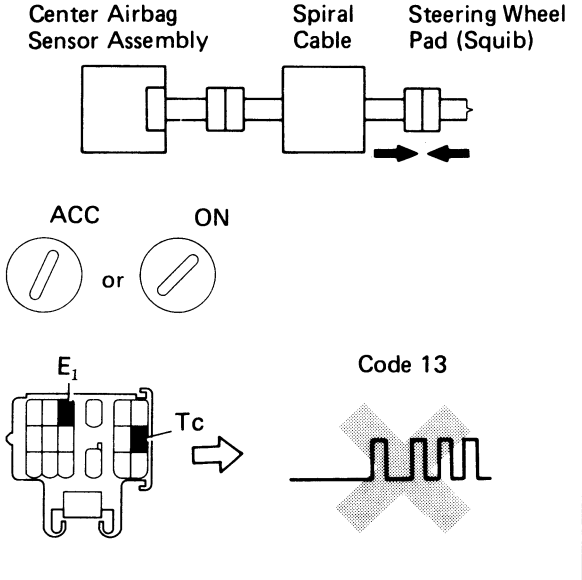

P (1) Turn ignition switch LOCK.
(2) Disconnect battery negative (–) terminal cable, and wait at least 20 seconds.
(3) Connect steering wheel pad (squib) connector.
(4) Connect negative (–) terminal cable to battery.
(5) Clear malfunction code 41 stored in memory (See page AB-31).

C (1) Turn ignition switch LOCK, and wait at least 2 seconds.
(2) Turn ignition switch ACC or ON, and wait at least 20 seconds.
(3) Using SST, connect terminals Tc and E_1 of check connector.
SST 09843-18020
(4) Check diagnostic code.

OK **Diagnostic code 13 is not output.**

Hint Codes other than code 13 may be output at this time, but this is not relevant to this check.

OK

NG > **Replace steering wheel pad.**

From the results of the above inspection, the malfunctioning part can now be considered normal. To make sure of this, use the simulation method to check.

5 Check spiral cable.

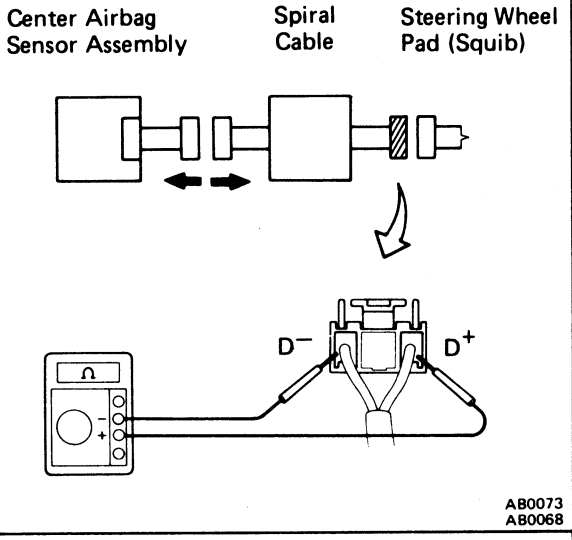

P (1) Disconnect connector between center airbag sensor assembly and spiral cable.
(2) Release airbag activation prevention mechanism on center airbag sensor assembly side of spiral cable connector (See page AB-54).

C Measure resistance between D^+ and D^- on spiral cable side of connector between spiral cable and steering wheel pad.

OK **Resistance:** ∞ Ω

OK

NG **Repair or replace spiral cable.**

6 Check harness between center airbag sensor assembly and spiral cable.

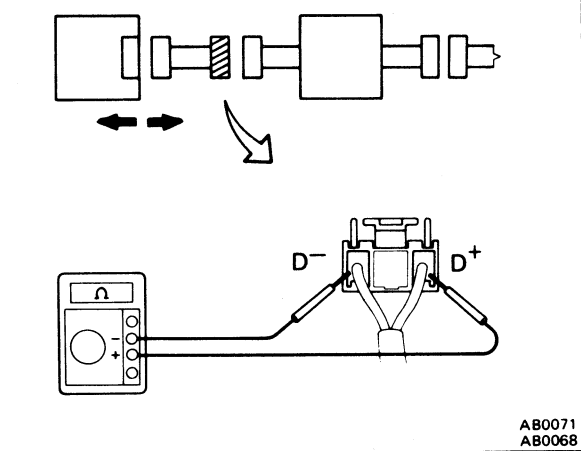

P (1) Disconnect center airbag sensor assembly connector.
(2) Release airbag activation prevention mechanism on center airbag sensor assembly connector (See page AB-54).

C Measure resistance between D^+ and D^- on center airbag sensor assembly side of connector between center airbag sensor assembly and spiral cable.

OK **Resistance:** ∞ Ω

OK

NG **Repair or replace harness or connector between center airbag sensor assembly and spiral cable.**

7 Check center airbag sensor assembly.

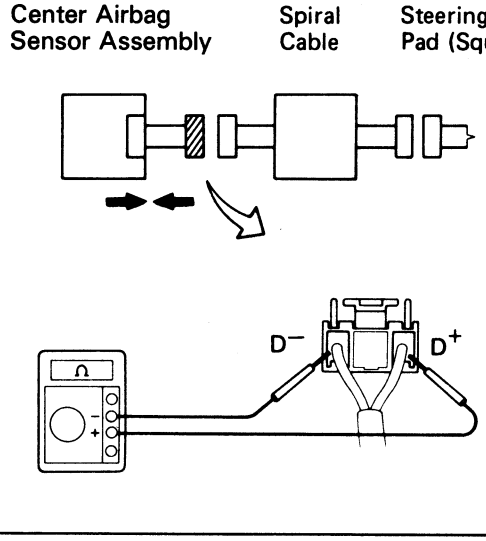

AB0073
AB0068

P Connect center airbag sensor assembly connector.

C Measure resistance between D^+ and D^- on center airbag sensor assembly side of connector between center airbag sensor assembly and spiral cable.

OK **Resistance: 1 kΩ or more**

OK

NG → **Replace center airbag sensor assembly.**

From the results of the above inspection, the malfunctioning part can now be considered normal. To make sure of this, use the simulation method to check.

RELEASE METHOD OF AIRBAG ACTIVATION PREVENTION MECHANISM

An airbag activation prevention mechanism is built into the connector for the squib circuit of the airbag system. When release of the airbag activation prevention mechanism is directed in the troubleshooting procedure, as shown in the illustration of the connectors ① and ② below, insert paper which is the same thickness as the male terminal, between the terminal and the short spring.

CAUTION:

- **NEVER RELEASE the airbag activation prevention mechanism on the steering wheel pad connector.**

NOTICE:

- **Do not release the airbag activation prevention mechanism unless specifically directed by the troubleshooting procedure.**
- **If the paper inserted is too thick the terminal and short spring may be damaged, so always use paper the same thickness as the male terminal.**

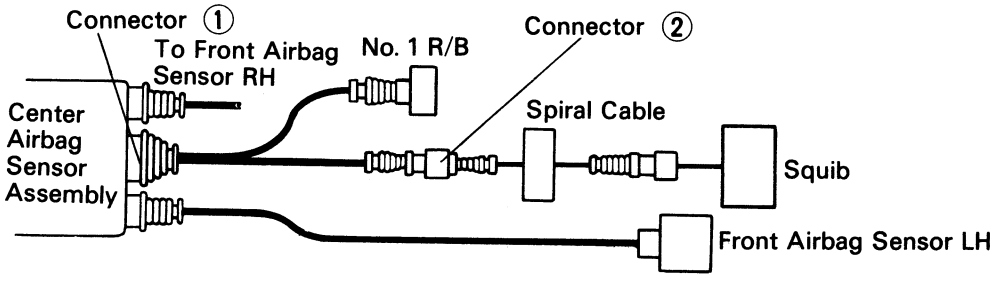

AB0123

Center Airbag Sensor Assembly Connector (Connector ①)

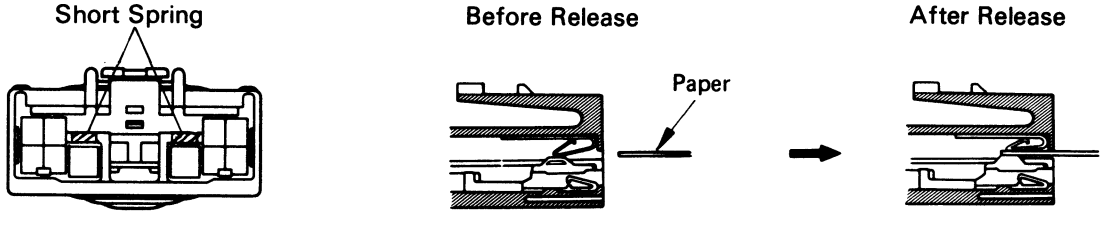

AB0129 AB0042 AB0043

Spiral Cable Connector (Connector ②)

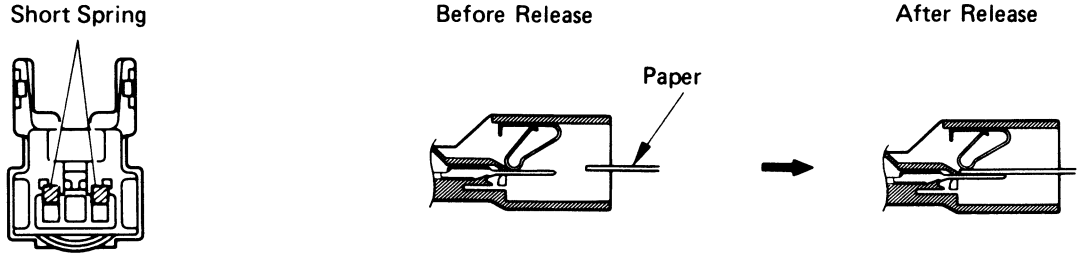

AB0130 AB0045 AB0046

Diag. Code	14	Open in Squib Circuit

CIRCUIT DESCRIPTION

The squib circuit consists of the center airbag sensor assembly, spiral cable and the steering wheel pad (squib). It causes the airbag to deploy when the airbag deployment conditions are satisfied.
For details of the function of each component, see FUNCTION OF COMPONENTS on page AB-7.
Diagnostic code 14 is recorded when an open is detected in the squib circuit.

Code. No.	Diagnosis
14	· Open circuit in D^+ wire harness or D^- wire harness of squib. · Squib malfunction. · Spiral cable malfunction. · Center airbag sensor assembly malfunction.

DIAGNOSTIC CHART

1 Preparation.

2 Check squib circuit.
- OK → Go to step **5**.
- NG

3 Check spiral cable.
- NG → Repair or replace spiral cable.
- OK

4 Check harness between center airbag sensor assembly and spiral cable.
- NG → Repair or replace harness or connector between center airbag sensor assembly and spiral cable.
- OK

5 Check center airbag sensor assembly.
- NG → Replace center airbag sensor assembly.
- OK

6 Check squib.
- NG → Replace steering wheel pad.
- OK

From the results of the above inspection, the malfunctioning part can now be considered normal. To make sure of this, use the simulation method to check.

WIRING DIAGRAM

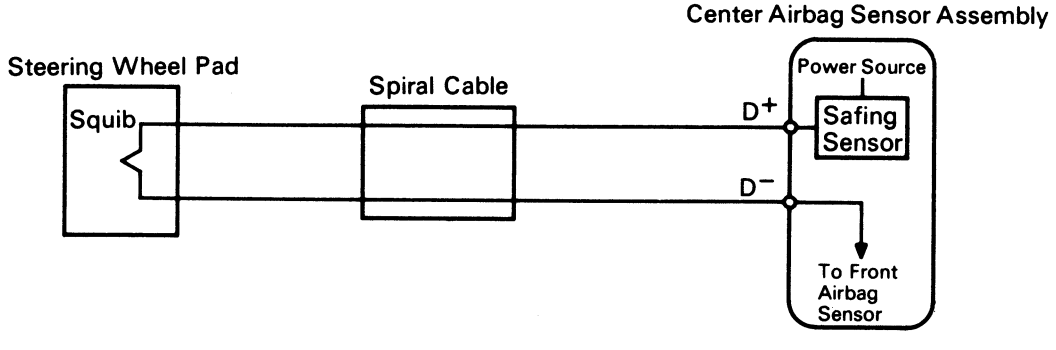

AB0191

INSPECTION PROCEDURES

P Preparation C Check

1 Preparation.

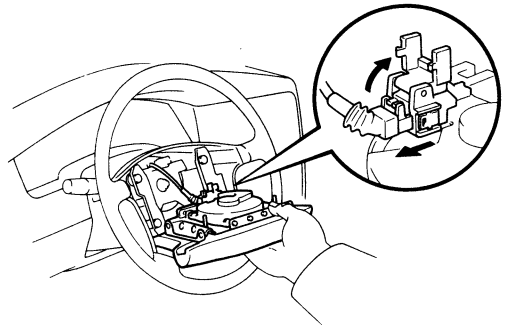

AB0117
AB0267

P (1) Disconnect battery negative (–) terminal cable, and wait at least 20 seconds.
(2) Remove steering wheel pad (See page AB-15).

Caution

When storing steering wheel pad, keep upper surface of the pad facing upward.

2 Check squib circuit.

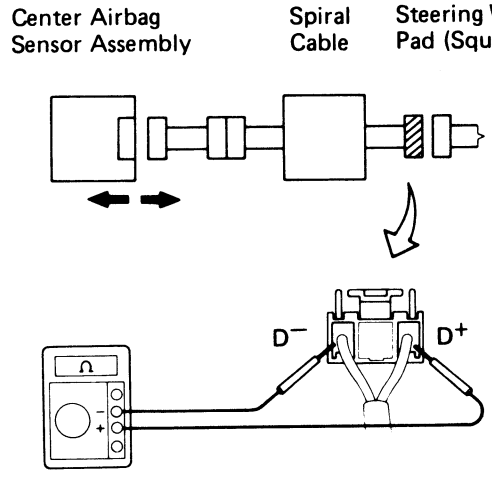

AB0072
AB0068

P Disconnect center airbag sensor assembly connector.

C Measure resistance between D^+ and D^- on spiral cable side of connector between spiral cable and steering wheel pad.

OK **Resistance: Less than 1 Ω**

NG

OK Go to step 5 .

3 Check spiral cable.

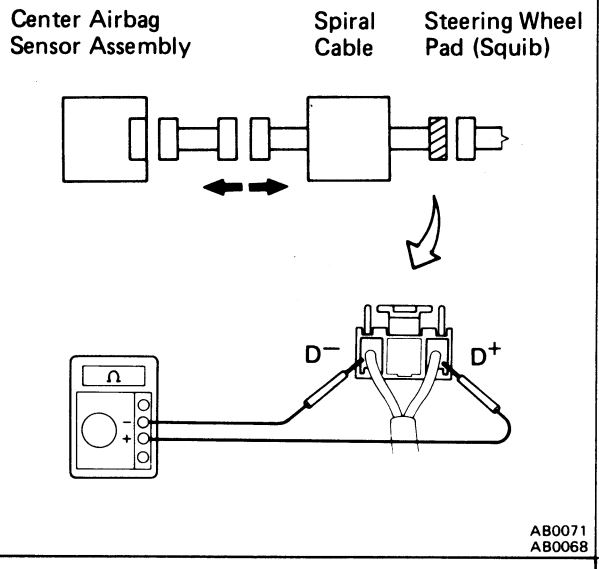

AB0071
AB0068

P Disconnect connector between center airbag sensor assembly and spiral cable.

C Measure resistance between D^+ and D^- on spiral cable side of connector between spiral cable and steering wheel pad.

OK **Resistance: Less than 1 Ω**

OK

NG **Repair or replace spiral cable.**

4 Check harness between center airbag sensor assembly and spiral cable.

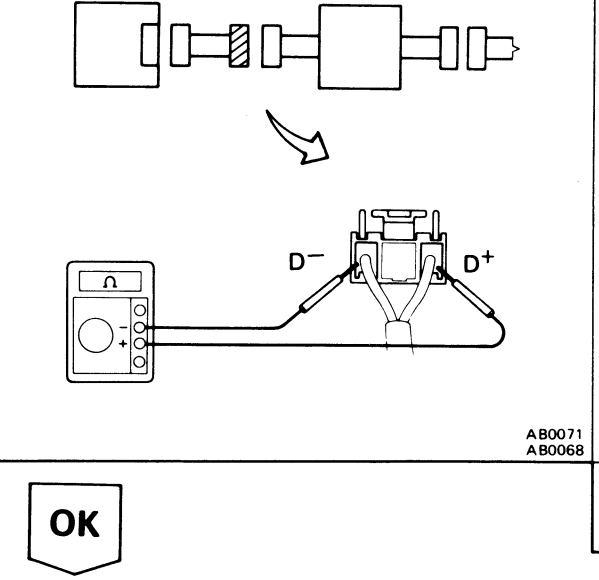

AB0071
AB0068

C Measure resistance between D^+ and D^- on center airbag sensor assembly side of connector between center airbag sensor assembly and spiral cable.

OK **Resistance: Less than 1 Ω**

OK

NG **Repair or replace harness or connector between center airbag sensor assembly and spiral cable.**

5 Check center airbag sensor assembly.

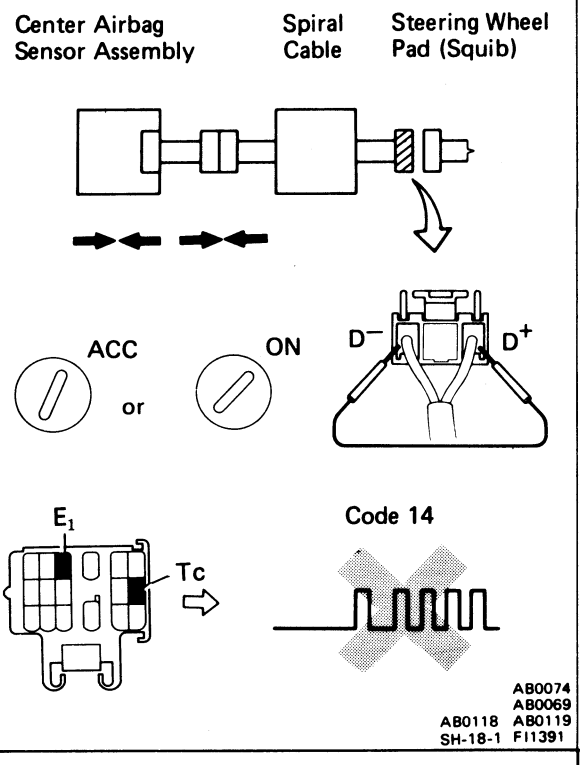

P (1) Connect connector to center airbag sensor assembly.
(2) Connect connector between center airbag sensor assembly and spiral cable.
(3) Using a service wire, connect D^+ and D^- on spiral cable side of connector between spiral cable and steering wheel pad.
(4) Connect negative (−) terminal cable to battery, and wait at least 2 seconds.

C (1) Turn ignition switch ACC or ON, and wait at least 20 seconds.
(2) Using SST, connect terminals Tc and E_1 of check connector.
SST 09843-18020
(3) Check diagnostic code.

OK **Diagnostic code 14 is not output.**

Hint Codes other than code 14 may be output at this time, but this is not relevant to this check.

OK

NG > **Replace center airbag sensor assembly.**

6 Check squib.

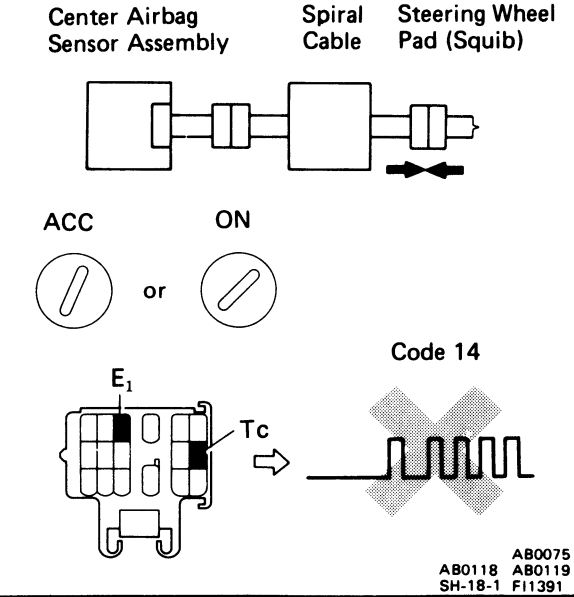

P (1) Turn ignition switch LOCK.
(2) Disconnect battery negative (−) terminal cable, and wait at least 20 seconds.
(3) Connect steering wheel pad (squib) connector.
(4) Connect negative (−) terminal cable to battery, and wait at least 2 seconds.

C (1) Turn ignition switch ACC or ON, and wait at least 20 seconds.
(2) Using SST, connect terminals Tc and E_1 of check connector.
SST 09843-18020
(3) Check diagnostic code.

OK **Diagnostic code 14 is not output.**

Hint Codes other than code 14 may be output at this time, but this is not relevant to this check.

OK

NG > **Replace steering wheel pad.**

From the results of the above inspection, the malfunctioning part can now be considered normal. To make sure of this, use the simulation method to check.

Diag. Code	15	Open in Front Airbag Sensor Circuit

CIRCUIT DESCRIPTION

The front airbag sensor detects the deceleration force in a frontal collision and is located in the radiator upper support.
For details of the function of each component, see FUNCTION OF COMPONENTS on page AB-7.
Diagnostic code 15 is recorded when an open is detected in the front airbag sensor circuit.

NOTICE: The front airbag sensor connector is equipped with an electrical connection check mechanism for the purpose of detecting an open in the front airbag sensor (See page AB-9). This mechanism is constructed so that when the terminals of the front airbag sensor have been connected (when the connector housing lock is in the locked condition), the connection detection pin on the wire harness side connects with the terminals for diagnosis use on the sensor side. If the connector is not properly connected, the diagnosis system may detect only a malfunction code, even though the airbag system is functioning normally.
When connecting the front airbag sensor connector, make sure it is connected properly. If diagnostic code 15 is displayed after the front airbag sensor connector has been connected, check again that it is properly connected.

Code No.	Diagnosis
15	· Open circuit in +S wire harness or –S wire harness of front airbag sensor. · Front airbag sensor malfunction. · Malfunction of electrical connection check mechanism of front airbag sensor. · Center airbag sensor assembly malfunction.

DIAGNOSTIC CHART

1 Preparation.

2 Check front airbag sensor circuit (Measure resistance between terminals +SR and −SR, +SL and −SL of center airbag sensor assembly connector).
- NG → Go to step 4 .
- OK ↓

3 Check center airbag sensor assembly.
- NG → Replace center airbag sensor assembly.
- OK ↓

From the results of the above inspection, the malfunctioning part can now be considered normal. To make sure of this, use the simulation method to check.

4 Check front airbag sensor.
- NG → Replace front airbag sensor.
- OK ↓

5 Check harness between center airbag sensor assembly and front airbag sensor.
- NG → Repair or replace harness or connector between center airbag sensor assembly and front airbag sensor (See page AB-21).
- OK ↓

Replace front airbag sensor connector (See page AB-21).

WIRING DIAGRAM

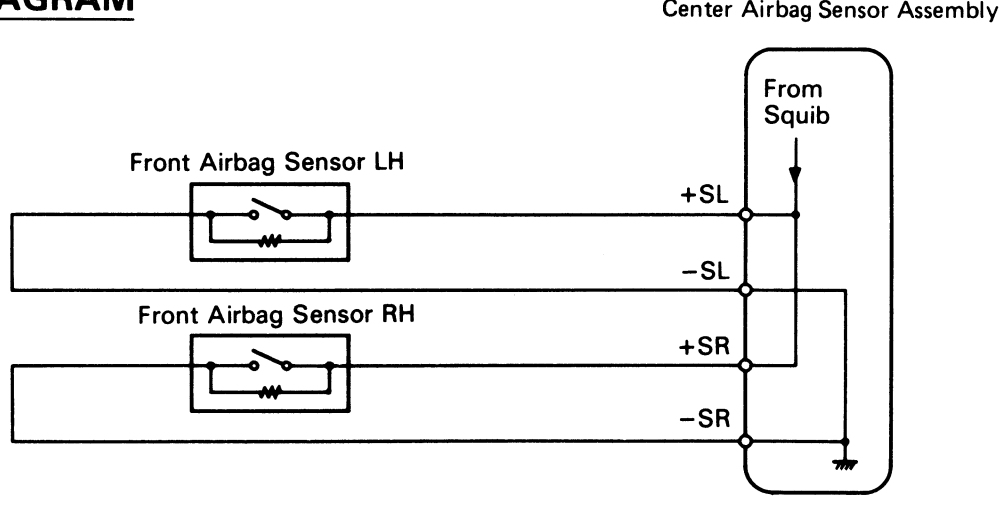

AB0192

INSPECTION PROCEDURES

P Preparation C Check

1 Preparation.

LOCK

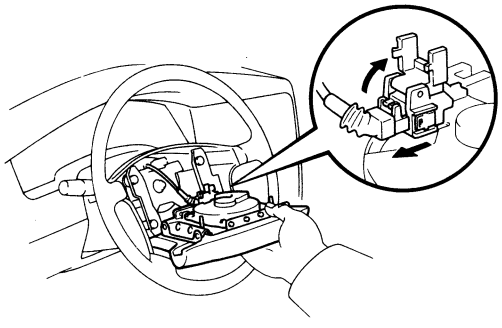

AB0117
AB0267

P (1) Disconnect battery negative (–) terminal cable, and wait at least 20 seconds.
(2) Remove steering wheel pad (See page AB-15).

Caution

When storing steering wheel pad, keep upper surface of pad facing upward.

2 Check front airbag sensor circuit (Measure resistance between terminals +SR and –SR, +SL and –SL of center airbag sensor assembly connector.).

Center Airbag Sensor Assembly

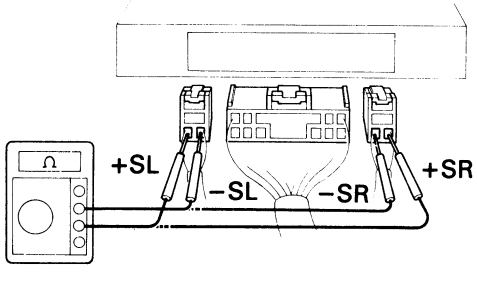

AB0097

P Disconnect center airbag sensor assembly connectors.

C Measure resistance between terminals +SR and –SR, +SL and –SL of harness side connector of center airbag sensor assembly.

OK **Resistance: 755Ω – 885Ω**

OK

NG Go to step 4 .

3 Check center airbag sensor assembly.

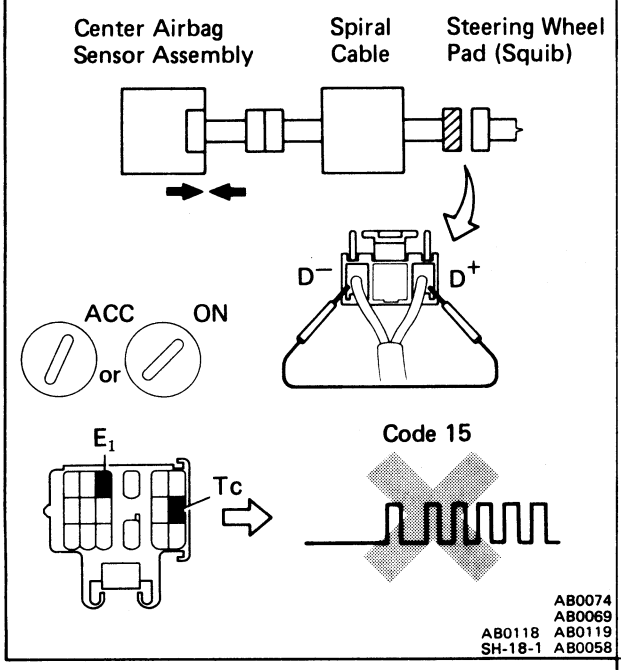

P (1) Connect connectors to center airbag sensor assembly.
(2) Using a service wire, connect D^+ and D^- on spiral cable side of connector between spiral cable and steering wheel pad.
(3) Connect negative (−) terminal cable to battery, and wait at least 2 seconds.

C (1) Turn ignition switch ACC or ON, and wait at least 20 seconds.
(2) Using SST, connect terminals Tc and E_1 of check connector.
SST 09843-18020
(3) Check diagnostic code.

OK **Diagnostic code 15 is not output.**

Hint Codes other than code 15 may be output at this time, but this is not relevant to this check.

OK

NG **Replace center airbag sensor assembly.**

From the results of the above inspection, the malfunctioning part can now be considered normal. To make sure of this, use the simulation method to check.

4 Check front airbag sensor.

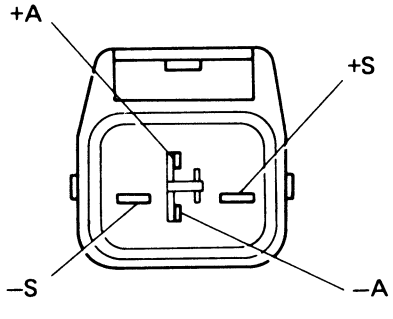

P Disconnect front airbag sensor connector.

C Measure resistance between each terminal of front airbag sensor.

OK

Terminal	Resistance
⊕S − ⊕A	755 Ω − 885 Ω
⊕S − ⊖S	∞
⊖S − ⊖A	Less than 1 Ω

Notice
- **Do not touch ohmmeter probes strongly against terminals of front airbag sensor.**
- **Make sure the front airbag sensor connector is properly connected.**

OK

NG **Replace front airbag sensor.**

5 **Check harness between center airbag sensor assembly and front airbag sensor.**

Center Airbag Sensor Assembly

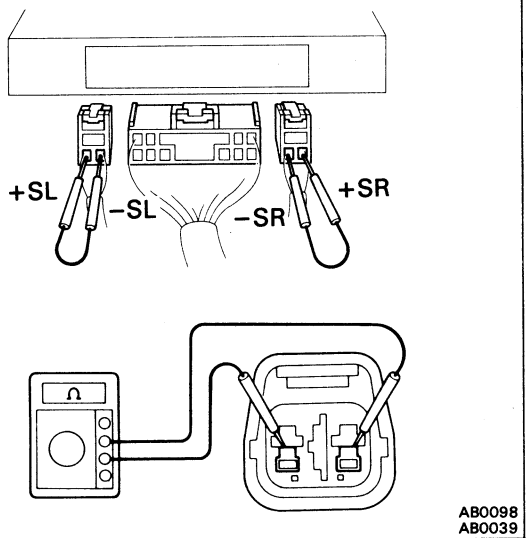

AB0098
AB0039

P (1) Disconnect center airbag sensor assembly connectors.
(2) Using service wires, connect +SR and −SR, +SL and −SL on the wire harness side of the center airbag sensor assembly connectors.

C Measure resistance between terminals +SR and −SR, +SL and −SL of harness side connector of front airbag sensor.

OK **Resistance: Less than 1 Ω**

Notice

- **Lightly touch ohmmeter probes at position shown in illustration.**
- **Make sure the front airbag sensor connector is properly connected.**

OK

NG → **Repair or replace harness or connector between center airbag sensor assembly and front airbag sensor (See page AB-21).**

Replace front airbag sensor connector (See page AB-21).

Diag. Code	22	Airbag Warning Light System Malfunction

CIRCUIT DESCRIPTION

The airbag warning light is located on the combination meter.
When the airbag system is normal, the airbag warning light lights up for approx. 6 seconds after the ignition switch is turned from LOCK position to ACC or ON position, and then turns off automatically.
If there is a malfunction in the airbag system, the airbag warning light lights up to inform the driver of the abnormality.
When terminals Tc and E_1 of the check connector are connected, the diagnostic code is displayed by the blinking of the airbag warning light.
The airbag warning light circuit is equipped with an electrical connection check mechanism which detects when the connector to the center airbag sensor assembly is not properly connected.
If the connector to the center airbag sensor assembly is not properly connected, the airbag warning light will not light up.
Diagnostic code 22 is recorded when a malfunction occurs in the airbag warning light system.
If an OPEN malfunction occurs in the airbag warning light system, the airbag warning light does not light up, so that until the malfunction is repaired, the diagnostic codes (including code 22) cannot be confirmed.

Code No.	Diagnosis
22	· Open circuit in airbag warning light system. · Center airbag sensor assembly malfunction.

DIAGNOSTIC CHART

Troubleshooting for this system is different for when the airbag warning light does not light up and for when diagnostic code 22 is output. Confirm the problem symptoms first before selecting the appropriate troubleshooting procedure.

HINT: If airbag warning light does not light up, perform the following troubleshooting:

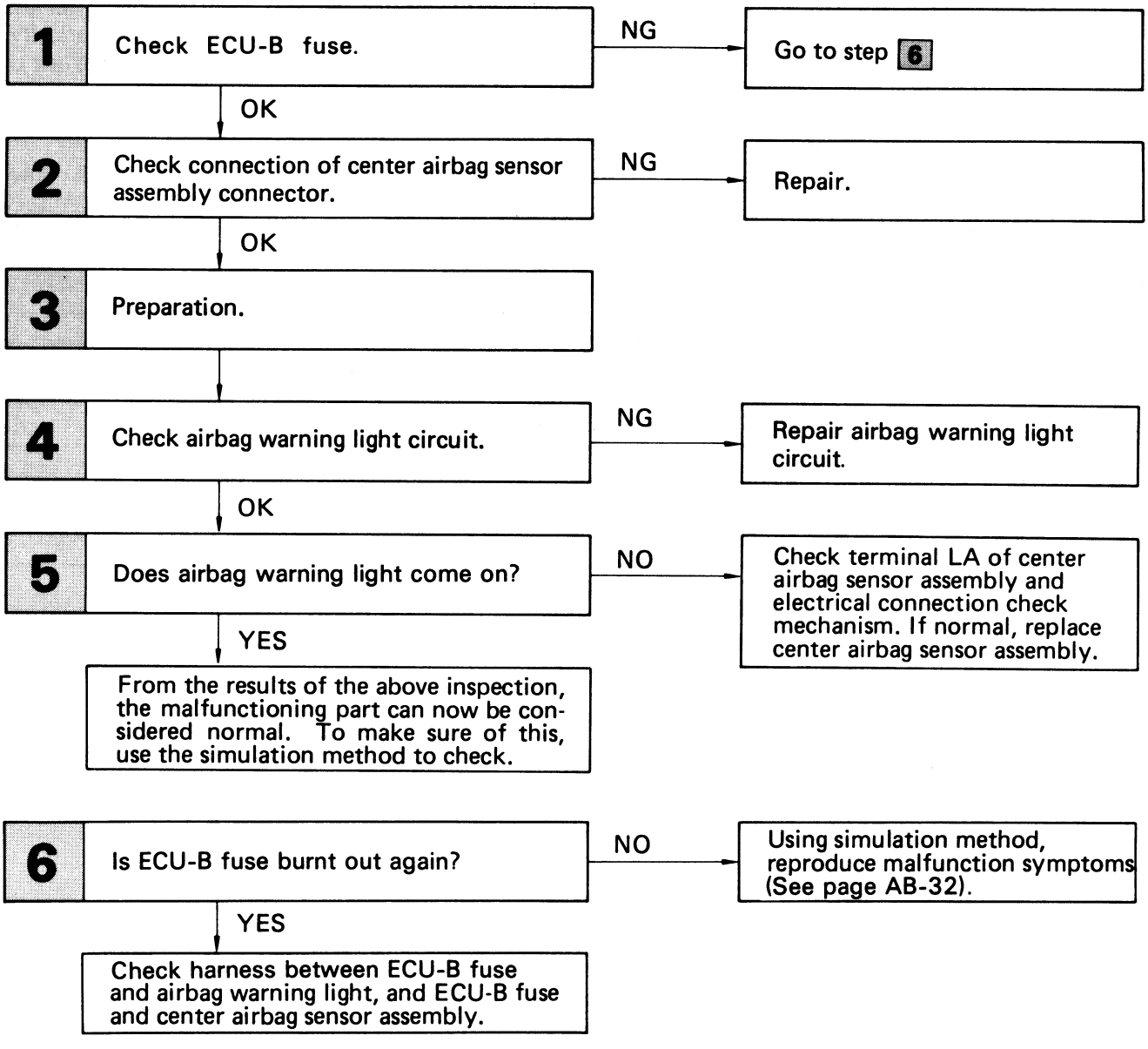

DIAGNOSTIC CHART

HINT: If diagnostic code 22 is output, perform the following troubleshooting:

1	Is diagnostic code 22 output again?	NO	Using simulation method, reproduce malfunction symptoms (See page AB-32).
	YES		
	Replace center airbag sensor assembly.		

WIRING DIAGRAM

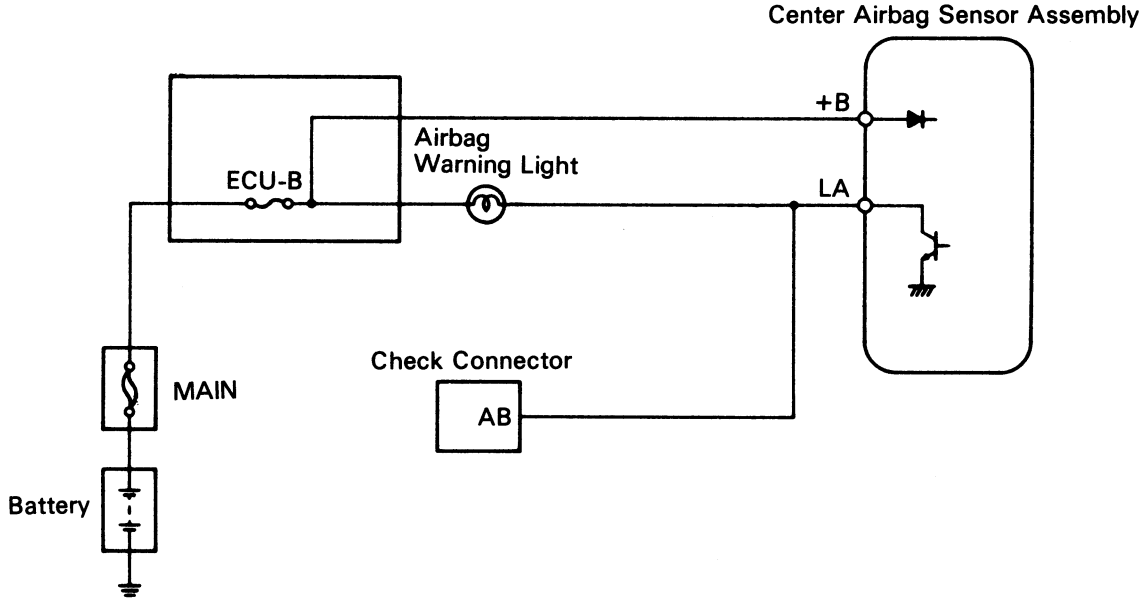

INSPECTION PROCEDURES

P Preparation C Check

HINT: If airbag warning light does not light up, perform the following troubleshooting:

1 Check ECU-B fuse.

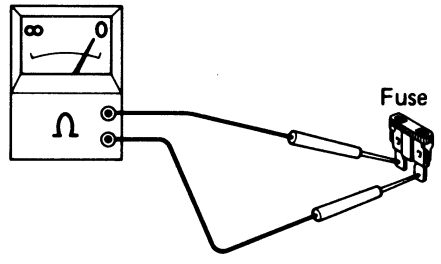

F10044

P Remove ECU-B fuse.

C Check continuity of ECU-B fuse.

OK **Continuity.**

Hint · Fuse may be burnt out even if it appears to be OK during visual inspection.
· If fuse is OK, install it.

NG > Go to step 6 .

OK

2 Check connection of center airbag sensor assembly connector.

NG > Repair.

OK

3 Preparation.

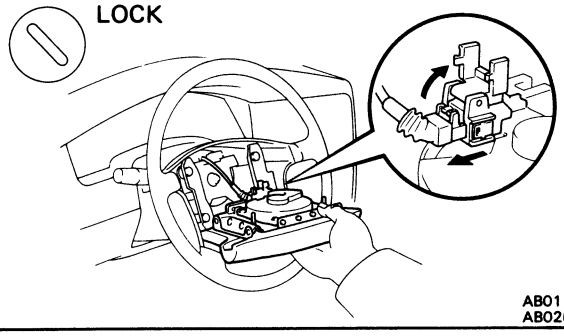

AB0117
AB0267

P (1) Disconnect battery negative (—) terminal cable, and wait at least 20 seconds.
(2) Remove steering wheel pad (See page AB-15).

Caution
When storing steering wheel pad, keep upper surface of pad facing upward.

4 Check airbag warning light circuit.

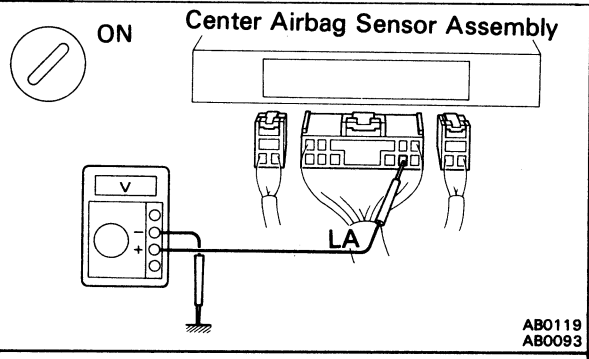

P (1) Disconnect center airbag sensor assembly connector.
(2) Connect negative (–) terminal cable to battery.
(3) Turn ignition switch ACC or ON.

C Measure voltage LA terminal of harness side connector of center airbag sensor assembly.

OK **Voltage: Battery voltage.**

OK

NG **Repair airbag warning light circuit.**

5 Does airbag warning light come on?

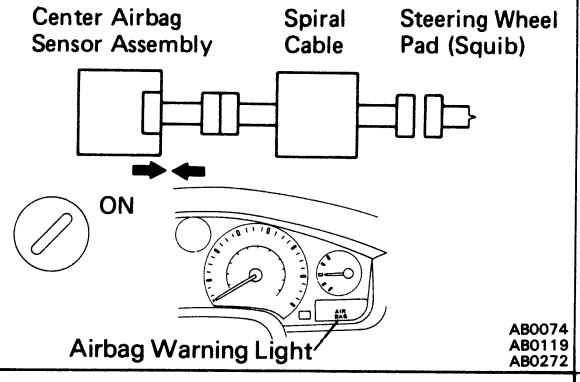

P (1) Disconnect negative (–) terminal cable from battery.
(2) Connect center airbag sensor assembly connector.
(3) Connect negative (–) terminal cable to battery.
(4) Turn ignition switch ACC or ON.

C Check operation of airbag warning light.

YES

NO **Check terminal LA of center airbag sensor assembly and electrical connection check mechanism. If normal, replace center airbag sensor assembly.**

From the results of the above inspection, the malfunctioning part can now be considered normal. To make sure of this, use the simulation method to check.

6 Is new ECU-B fuse burnt out again ?

YES

NO **Using simulation method, reproduce malfunction symptoms (See page AB-32).**

Check harness between ECU-B fuse and airbag warning light, and ECU-B fuse and center airbag sensor assembly.

HINT: If diagnostic code 22 is output, perform the following troubleshooting:

1 Is diagnostic code 22 output again?

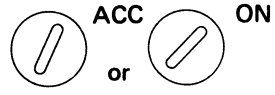

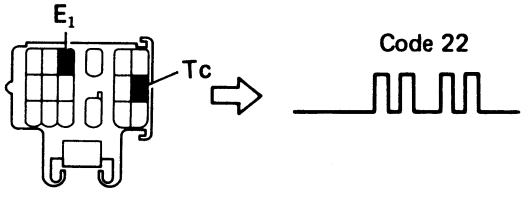

AB0118 AB0119
SH-18-1 FI1392

P Clear malfunction code 41 stored in memory (See page AB-31).

C (1) Turn ignition switch LOCK, and wait at least 2 seconds.
(2) Turn ignition switch ACC or ON, and wait at least 20 seconds.
(3) Using SST, connect terminals Tc and E_1 of check connector.
SST 09843-18020
(4) Check diagnostic code.

YES

NO > **Using simulation method, reproduce malfunction symptoms (See page AB-32).**

Replace center airbag sensor assembly.

Diag. Code	31	Center Airbag Sensor Assembly Malfunction

CIRCUIT DESCRIPTION

The center airbag sensor assembly consists of a center airbag sensor, safing sensors, ignition control and drive circuit, diagnosis circuit, etc.
It receives signals from the airbag sensors, judges whether or not the airbag must be activated, and diagnoses system malfunction.
Diagnostic code 31 is recorded when occurrence of a malfunction in the center airbag sensor assembly is detected.

Code No.	Diagnosis
31	· Center airbag sensor assembly malfunction.

DIAGNOSTIC CHART

HINT: When a malfunction code other than code 31 is displayed at the same time, first repair the malfunction indicated by the malfunction code other than code 31.

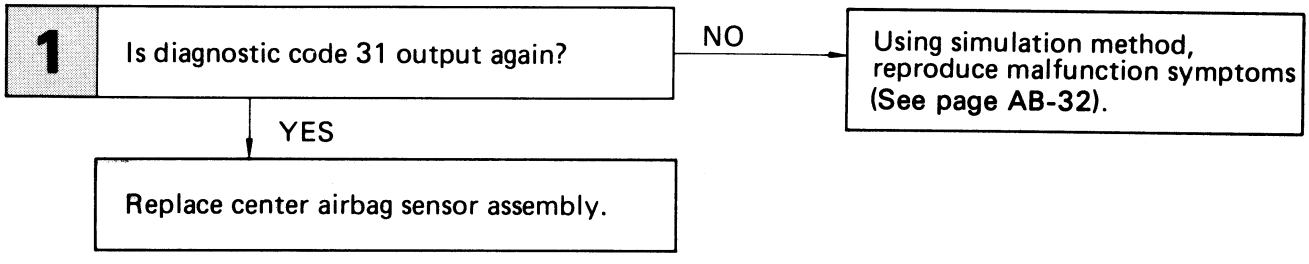

INSPECTION PROCEDURES

HINT: When a malfunction code other than code 31 is displayed at the same time, first repair the malfunction indicated by the malfunction code other than code 31.

P Preparation C Check

1 Is diagnostic code 31 output again ?

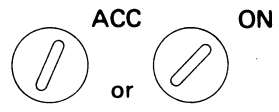

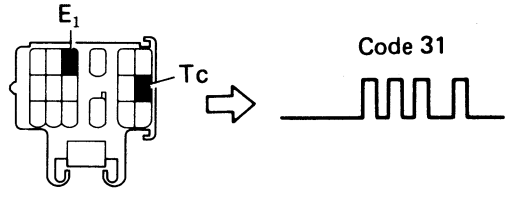

AB0118 AB0119
SH-18-1 FI1394

P Clear malfunction code 41 stored in memory (See page AB-31).

C
(1) Turn ignition switch LOCK, and wait at least 20 seconds.
(2) Turn ignition switch ACC or ON, and wait at least 20 seconds.
(3) Repeat operation in step (1) and (2) at least 5 times.
(4) Using SST, connect terminals Tc and E_1 of check connector.
SST 09843-18020
(5) Check diagnostic code.

YES

NO → **Using simulation method, reproduce malfunction symptoms (See page AB-32).**

Replace center airbag sensor assembly.

Diag. Code	41	Malfunction Stored in Memory

CIRCUIT DESCRIPTION

If a malfunction occurs in the airbag system, malfunction codes 11 to 31 may be output, and when the battery is disconnected after the malfunction is repaired, malfunction codes 11 to 31 will be cleared, but code 41 will be output instead.
So long as the cancellation operation for a malfunction recorded in memory (See page AB-31) is not performed, code 41 recorded in the center airbag sensor assembly and the airbag warning light remains lit up.

Code No.	Diagnosis
41	· Malfunction recorded in memory. · Center airbag sensor assembly malfunction.

DIAGNOSTIC CHART

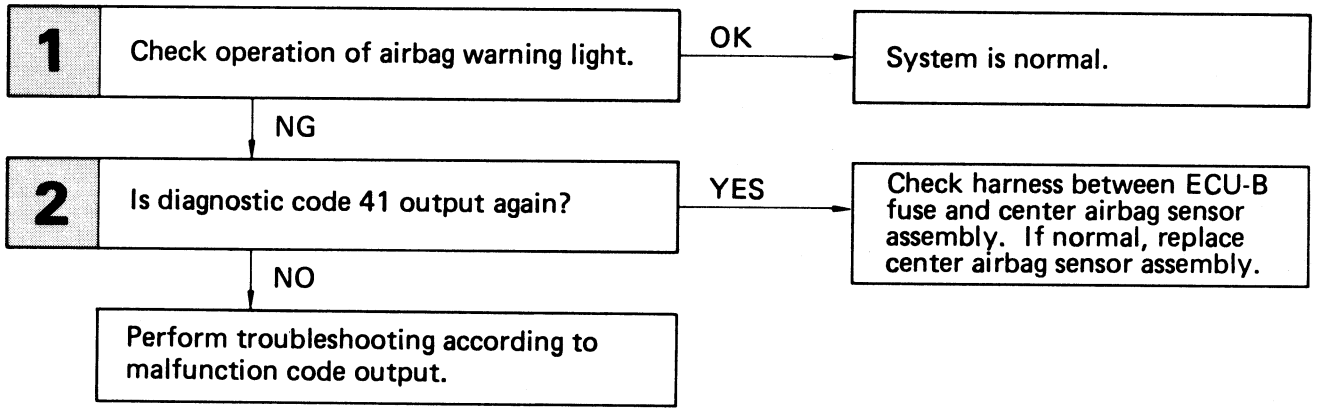

WIRING DIAGRAM

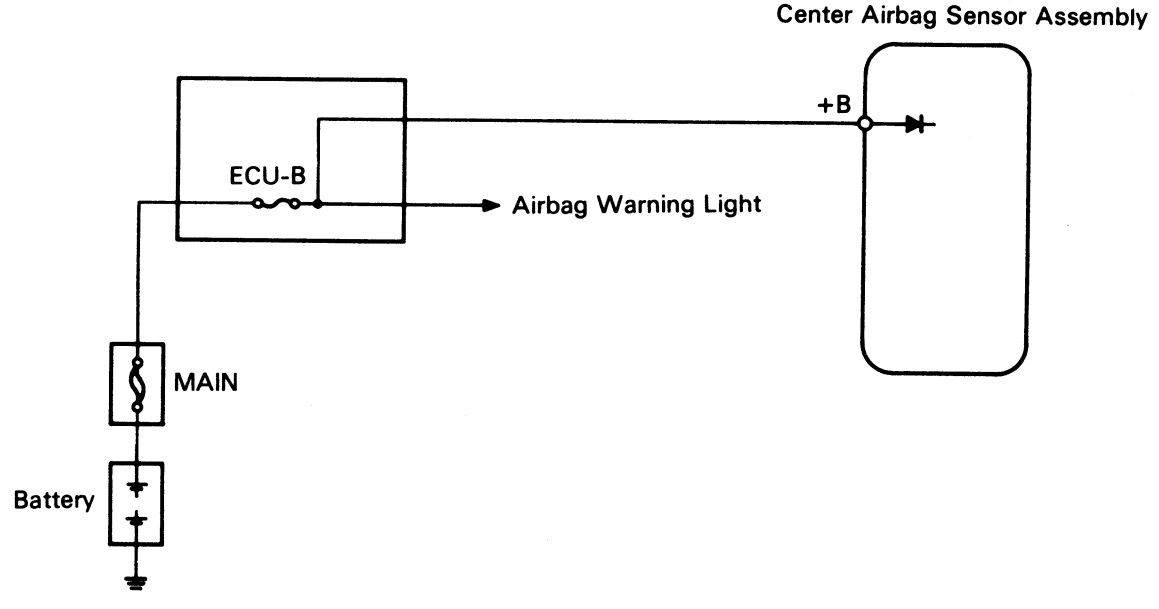

AB0194

INSPECTION PROCEDURES

P Preparation C Check

1 Check operation of airbag warning light.

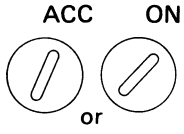

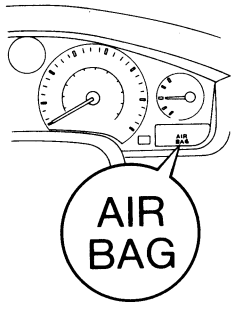

AB0118 AB0119 AB0260

P Clear malfunction code 41 stored in memory (See page AB-31).

C (1) Turn ignition switch LOCK, and wait at least 2 seconds.
(2) Turn ignition switch ACC or ON, and wait at least 20 seconds.
(3) Check operation of airbag warning light.

OK **Airbag warning light turns off.**

NG

OK → **System is normal.**

2 Is diagnostic code 41 output again ?

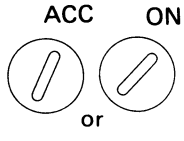

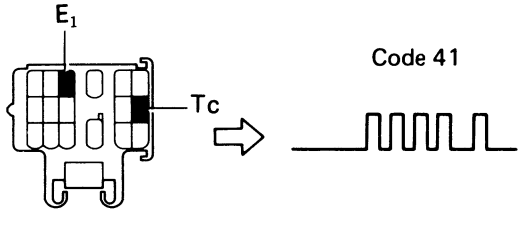

AB0118 AB0119 SH-18-1 FI1396

C (1) Turn ignition switch ACC or ON, and wait at least 20 seconds.
(2) Using SST, connect terminals Tc and E_1 of check connector.
SST 09843-18020
(3) Check diagnostic code.

NO

YES → **Check harness between ECU-B fuse and center airbag sensor assembly. If normal, replace center airbag sensor assembly.**

Perform troubleshooting according to malfunction code output.

Airbag Warning Light System (Always Lit Up)

CIRCUIT DESCRIPTION

The airbag warning light is located on the combination meter.
When the airbag system is normal, the airbag warning light lights up for approx. 6 seconds after the ignition switch is turned from LOCK position to ACC or ON position, and then turns off automatically.
If there is a malfunction in the airbag system, the airbag warning light lights up to inform the driver of the abnormality.
When terminals Tc and E_1 of the check connector are connected, the diagnostic code is displayed by the blinking of the airbag warning light.

DIAGNOSTIC CHART

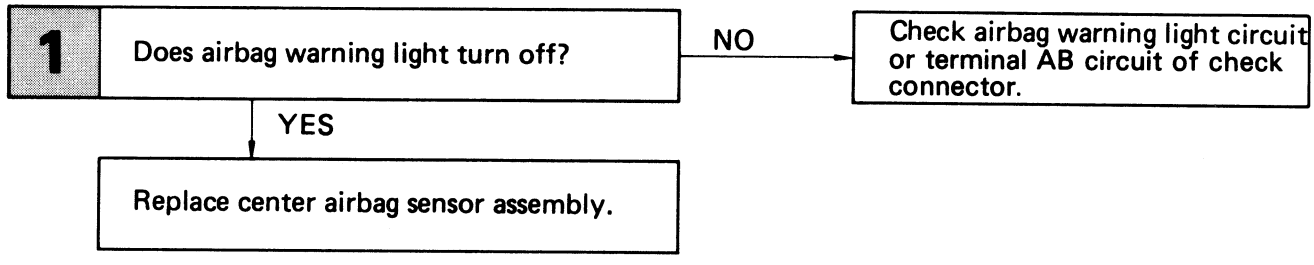

WIRING DIAGRAM

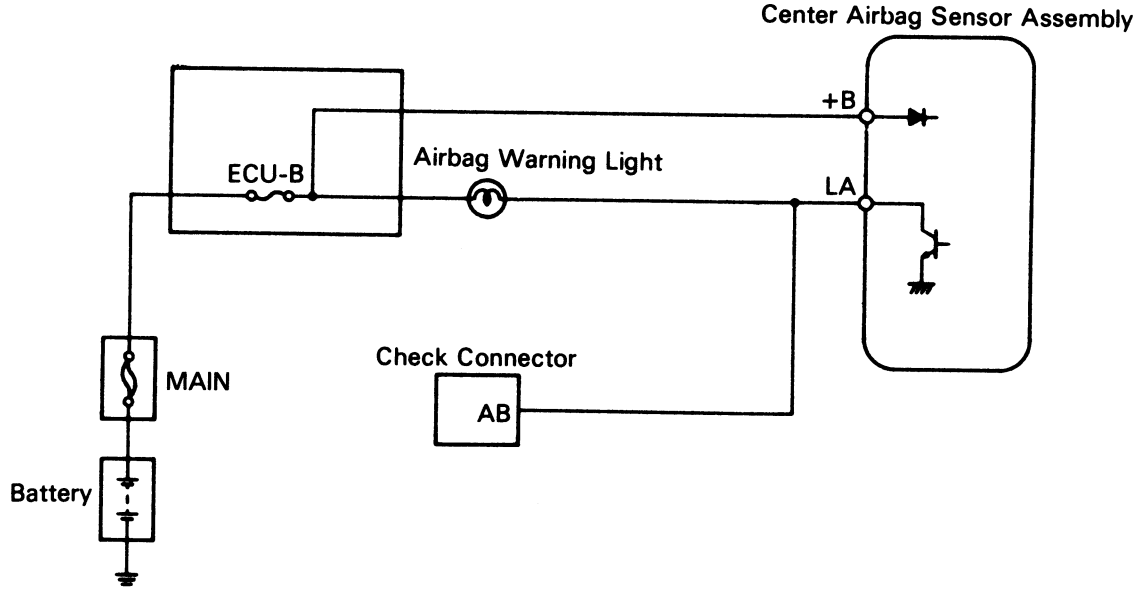

AB0240

INSPECTION PROCEDURES

P Preparation C Check

1 **Does airbag warning light turn off ?**

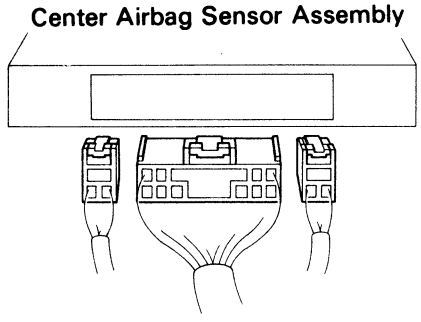

AB0117
AB0092

P (1) Turn ignition switch LOCK.
(2) Disconnect negative (–) terminal cable from battery.
(3) Disconnect center airbag sensor assembly connector.
(4) Connect negative (–) terminal cable to battery.

C Check operation of airbag warning light.

YES

Replace center airbag sensor assembly.

NO

Check airbag warning light circuit or terminal AB circuit of check connector.

Tc Terminal Circuit

CIRCUIT DESCRIPTION

By connecting terminals Tc and E_1 of the check connector, the center airbag sensor assembly is set in the diagnostic code output mode. The diagnostic codes are displayed by the blinking of the airbag warning light.

DIAGNOSTIC CHART

Troubleshooting for this system is different depending on whether the diagnostic code is not displayed or is continuously displayed. Confirm the problem symptoms first before selecting the appropriate troubleshooting procedure.

HINT: If the diagnostic code is not displayed, perform the following troubleshooting:

1	Check voltage between terminals Tc and E_1 of check connector.	OK	Go to step 3.
NG			
2	Check voltage between terminal Tc of check connector and body ground.	OK	Check harness between terminal E_1 of check connector and body ground.
NG			
3	Check center airbag sensor assembly.	OK	Check harness between center airbag sensor assembly and check connector.
NG			
Replace center airbag sensor assembly.			

HINT: If the diagnostic code is continuously displayed, perform the following troubleshooting:

1	Check resistance between terminal Tc of center airbag sensor assembly and body ground.	OK	Replace center airbag sensor assembly.
NG			
Repair or replace harness or connector.			

DIAGNOSTIC CHART

WIRING DIAGRAM

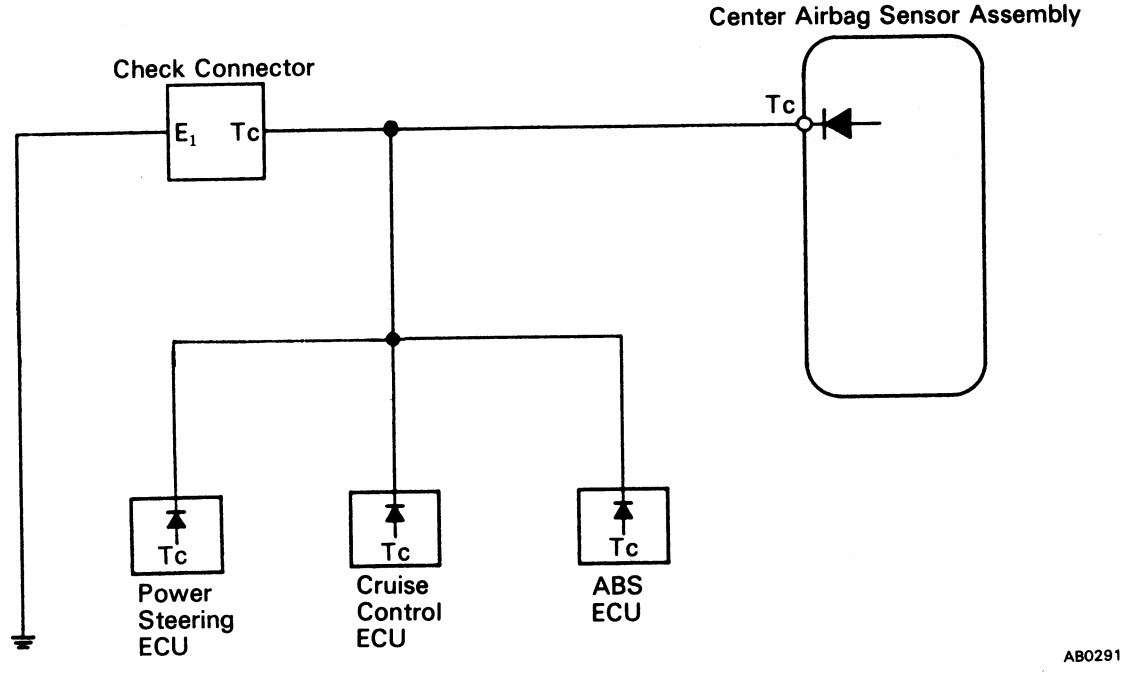

INSPECTION PROCEDURES

P Preparation C Check

HINT: If the diagnostic code is not displayed, perform the following troubleshooting:

1 Check voltage between terminals Tc and E_1 of check connector.

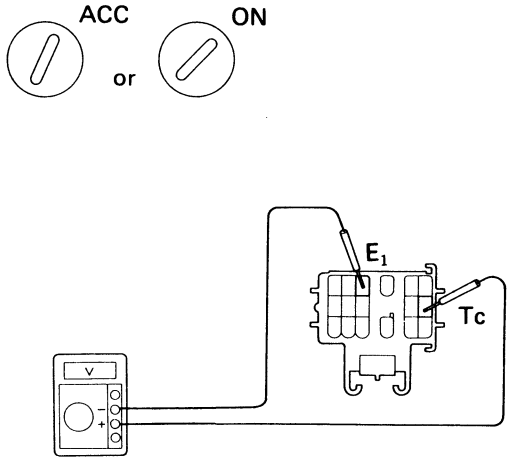

P Turn ignition switch ACC or ON.

C Measure voltage between terminals Tc and E_1 of check connector.

OK **Voltage: Battery voltage**

NG

OK 〉 Go to step 3 .

2 Check voltage between terminal Tc of check connector and body ground.

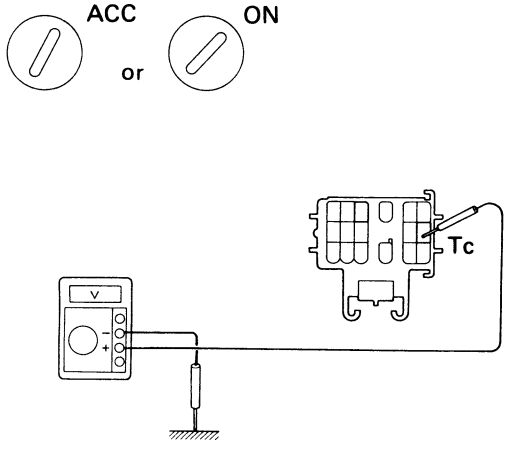

C Measure voltage between terminal Tc of check connector and body ground.

OK **Voltage: Battery voltage**

NG

OK 〉 **Check harness between terminal E_1 of check connector and body ground.**

3 Check center airbag sensor assembly.

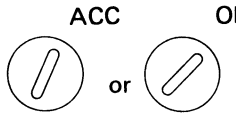

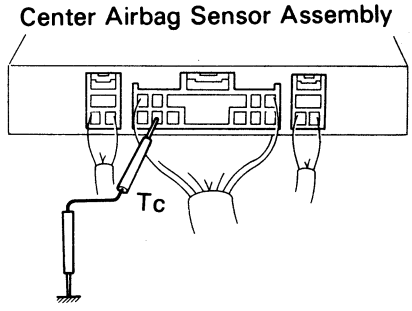

AB0118 AB0119 AB0188

P Using a service wire, connect terminal Tc of center airbag sensor assembly connector to body ground.

C Check operation of airbag warning light.

OK **Airbag warning light comes on.**

NG

Replace center airbag sensor assembly.

OK

Check harness between center airbag sensor assembly and check connector.

HINT: If the diagnostic code is continuously displayed, perform the following troubleshooting.

1 Check resistance between terminal Tc of center airbag sensor assembly and body ground.

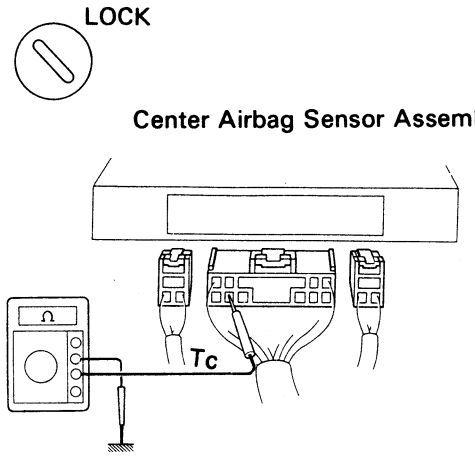

P (1) Turn ignition switch LOCK.
(2) Disconnect center airbag sensor assembly connector.

C Check resistance between terminal Tc of center airbag sensor assembly and body ground.

OK **Resistance:** ∞ Ω

NG

Repair or replace harness or connector.

OK

Replace center airbag sensor assembly.

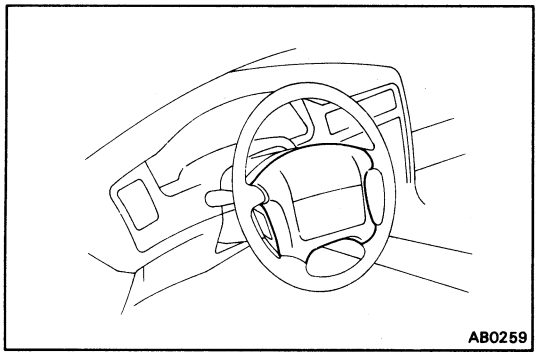
AB0259

DISPOSAL OF STEERING WHEEL PAD (WITH AIRBAG)

When scrapping vehicles equipped with an airbag system or disposing of a steering wheel pad (with airbag), always first deploy the airbag in accordance with the procedure described below.

If any abnormality occurs with the airbag deployment, contact the SERVICE DEPT. of TOYOTA MOTOR SALES, U.S.A., INC..

Never dispose of a steering wheel pad which has an undeployed airbag.

When disposing of a steering wheel pad with an airbag deployed in a collision, follow the same procedure given under "AIRBAG DEPLOYMENT PROCEDURE (WHEN SCRAPPING THE VEHICLE), part 5, DISPOSAL OF STEERING WHEEL PAD (WITH AIRBAG) "(See page AB-84).

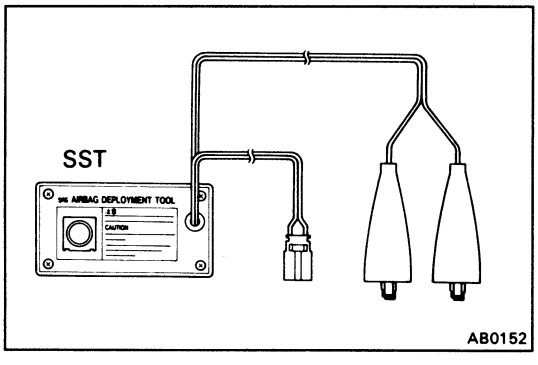

AB0152

PRECAUTIONS FOR AIRBAG DEPLOYMENT

1. **The airbag produces a sizeable exploding sound when it deploys, so perform the operation out-of-doors and where it will not create a nuisance to nearby residents.**
2. **When deploying the airbag, always use the specified SST: SRS AIRBAG DEPLOYMENT TOOL (SST 09082-00700). Perform the operation in a place away from electrical noise.**
3. **When deploying an airbag, perform the operation from at least 10 m (33 ft) away from the steering wheel pad.**
4. **The steering wheel pad is very hot when the airbag is deployed, so leave it alone for at least 30 minutes after deployment.**
5. **Use gloves and safety glasses when handling a steering wheel pad with deployed airbag.**
6. **Always wash your hands with water after completing the operation.**
7. **Do not apply water, etc. to a steering wheel pad with deployed airbag.**

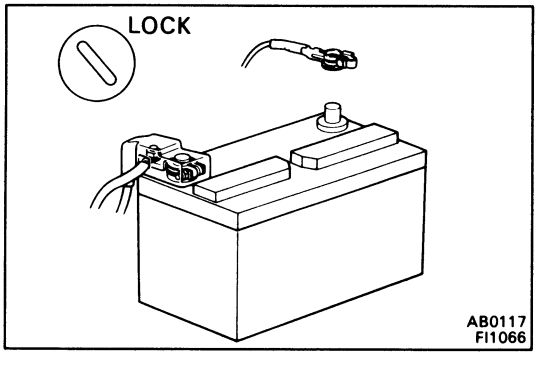

AB0117
FI1066

AIRBAG DEPLOYMENT PROCEDURE (WHEN SCRAPPING VEHICLE)

HINT: Have a battery ready as the power source to deploy the airbag.

1. **DISCONNECT NEGATIVE (–) TERMINAL CABLE FROM BATTERY**

   CAUTION: Work must be started after approx. 20 seconds or longer from the time the ignition switch is turned to the LOCK position and the negative (–) terminal cable is disconnected from the battery (See page AB-2).

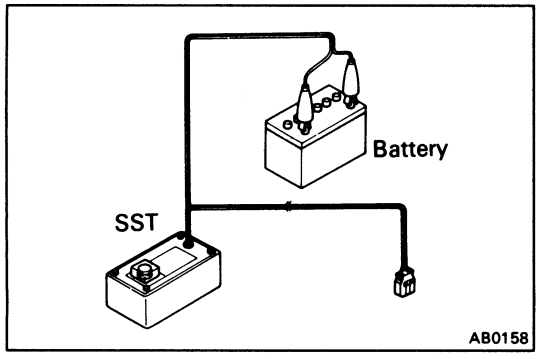

2. CONFIRM FUNCTIONING OF SST (SEE PAGE AB-88)

SST 09082-00700

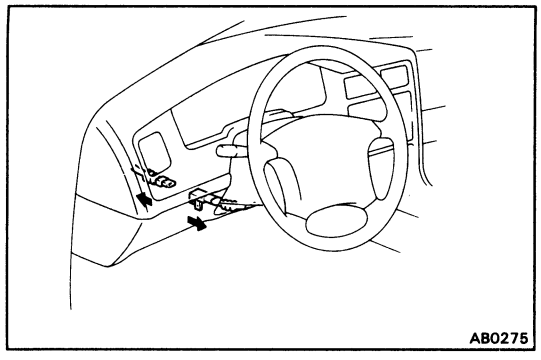

3. INSTALL SST

CAUTION: Check that there is no looseness in the steering wheel and steering wheel pad.

(a) Remove the instrument panel lower finish panel.

(b) Disconnect the airbag connector of the spiral cable.

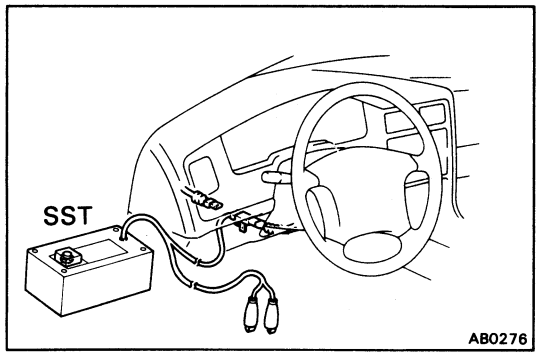

(c) Connect the SST connector to the airbag connector of the spiral cable.

SST 09082-00700

(d) Move the SST to at least 10 m (33 ft) from the front of the vehicle.

(e) Close all the doors and windows of the vehicle.

NOTICE: Take care not to damage the SST wire harness.

(f) Connect the SST red clip to the battery positive (+) terminal and the black clip to the battery nagative (–) terminal.

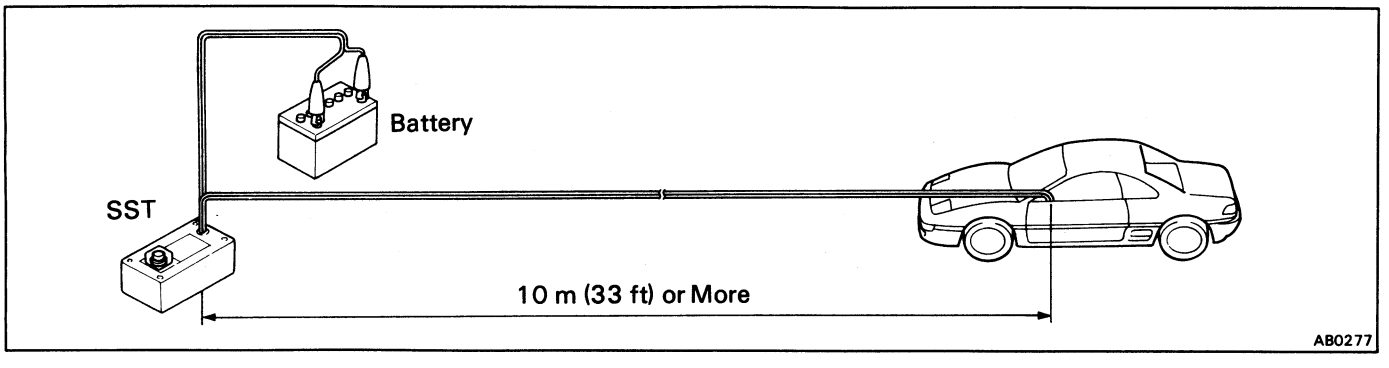

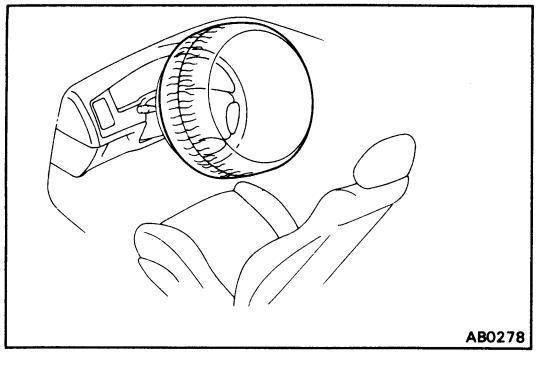

4. DEPLOY AIRBAG

(a) Confirm that no-one is inside the vehicle or within 10 m (33 ft) of the vehicle.

(b) Press the SST activation switch and deploy the airbag.

HINT: The airbag deploys simultaneously as the LED of the SST activation switch lights up.

5. DISPOSAL OF STEERING WHEEL PAD (WITH AIRBAG)

CAUTION:

- **The steering wheel pad is very hot when the airbag is deployed, so leave it alone for at least 30 minutes after deployment.**
- **Use gloves and safety glasses when handling a steering wheel pad with deployed airbag.**
- **Do not apply water, etc. to a steering wheel pad with deployed airbag.**
- **Always wash your hands with water after completing the operation.**

(a) When scrapping a vehicle, deploy the airbag and scrap the vehicle with the steering wheel pad still installed.

(b) When moving a vehicle for scrapping which has a steering wheel pad with deployed airbag, use gloves and safety glasses.

AIRBAG DEPLOYMENT PROCEDURE (PROCEDURE FOR DISPOSAL OF STEERING WHEEL PAD ONLY)

When disposing of the steering wheel pad (with airbag) only, never use the customer's vehicle to deploy the airbag.

Remove the steering wheel pad from the vehicle and be sure to follow the procedure given below when deploying the airbag.

HINT:

- Have a battery ready as the power source to deploy the airbag.

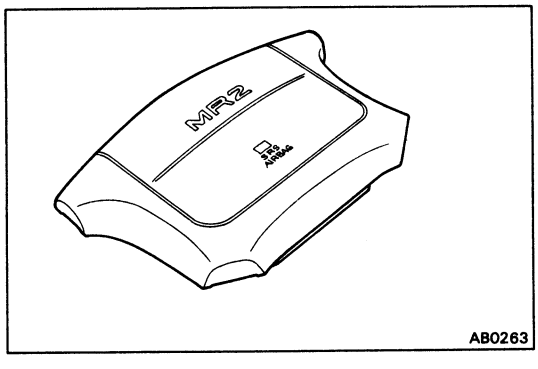

AB0263

1. REMOVE STEERING WHEEL PAD (SEE PAGE AB-15)

CAUTION:

- **When removing the steering wheel pad (with airbag), work must be started after approx. 20 seconds or longer from the time the ignition switch is turned to the LOCK position and the nagative (–) terminal cable is disconnected from the battery.**
- **When storing the steering wheel pad, keep the upper surface of the pad facing upward.**

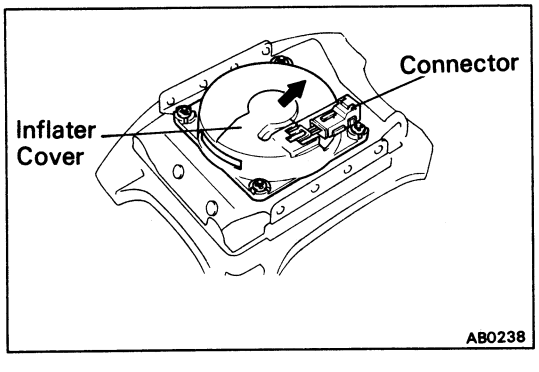

AB0238

2. REMOVE STEERING WHEEL PAD CONNECTOR

Remove the connector on the steering wheel pad rear surface from the inflater cover.

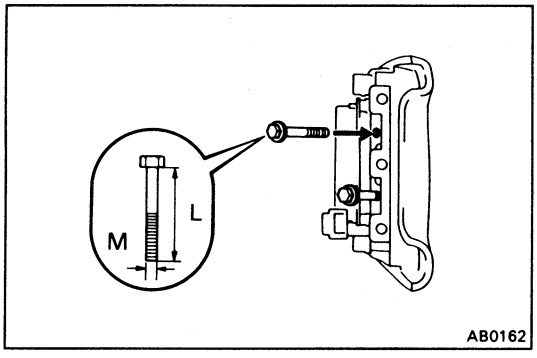

3. **FIX STEERING WHEEL PAD TO DISC WHEEL WITH TIRE**

(a) Install bolts with washers in the four bolt holes in the steering wheel pad.

Bolt: L 35.0 mm (1.378 in.)
M 6.0 mm
Pitch 1.0 mm

NOTICE: Tighten the bolts by hand until the bolts become difficult to turn.
Do not tighten the bolts too much.

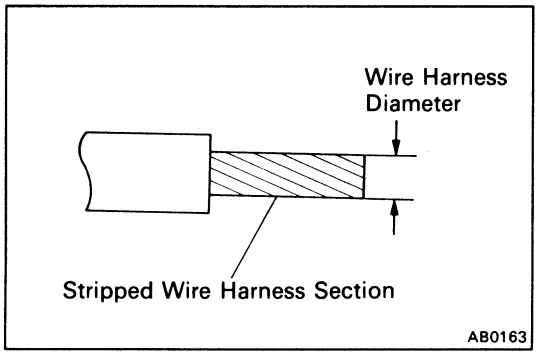

(b) Using a service-purpose wire harness for vehicle, tie down the steering wheel pad to the disc wheel.

Wire harness: Stripped wire harness section 1.25 mm^2 or more (0.002 $in.^2$ or more)

HINT: To calculate the square of the stripped wire harness section –

$$\text{Square} = \frac{3.14 \times (\text{Diameter})^2}{4}$$

CAUTION: If a wire harness which is too thin or some other thing is used to tie down the steering wheel pad, it may be snapped by the shock when the airbag is deployed, this is highly dangerous.
Always use a wire harness for vehicle use which is at least 1.25 mm^2 (0.002 $in.^2$).

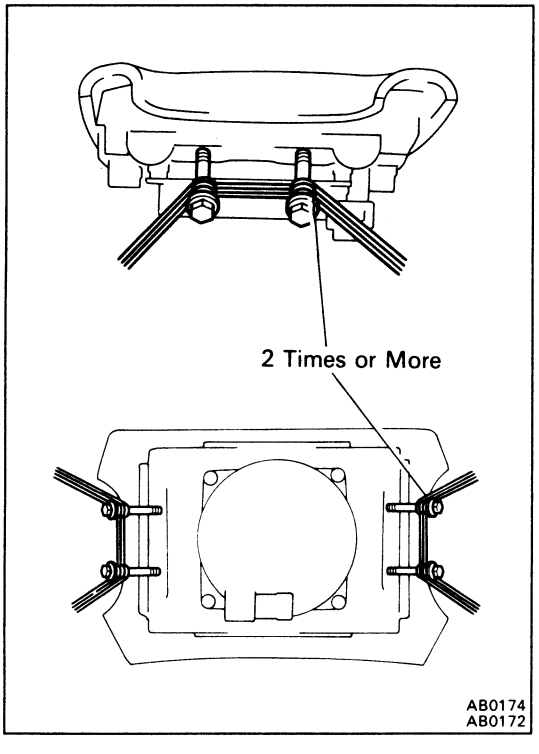

(1) Using 3 wire harnesses, wrap the wire harnesses at least 2 times each around the bolts installed on the left and right sides of the steering wheel pad.

CAUTION: Tightly wind the wire harness around the bolts so that there is no slack.
If there is slackness in the wire harness, the steering wheel pad may come loose due to the shock when the airbag is deployed, this is highly dangerous.

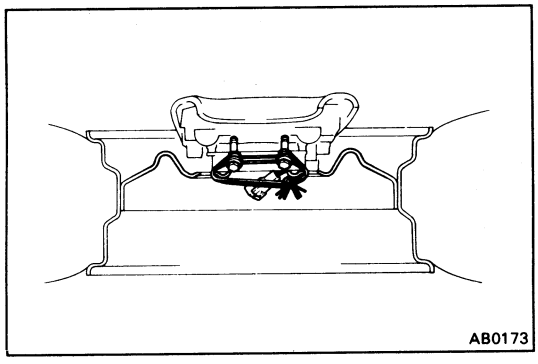
AB0173

(2) Face the upper surface of the steering wheel pad upward. Separately tie the left and right sides of the steering wheel pad to the disc wheel through the hub nut holes.
Position the steering wheel pad connector so that it hangs downward through a hub hole in the disc wheel.

CAUTION:

- **Always tie down the steering wheel pad with the pad side facing upward. It is very dangerous if the steering wheel pad is tied down with the metal surface facing upward, as the wire harness will be cut by the shock of the airbag deploying and the steering wheel pad will be thrown into the air.**
- **Make sure that the wire harness is tight.**
  It is very dangerous if looseness in the wire harness results in the steering wheel pad coming free through the shock of the airbag deploying.

NOTICE: The disc wheel will be marked by airbag deployment, so use a redundant disc wheel.

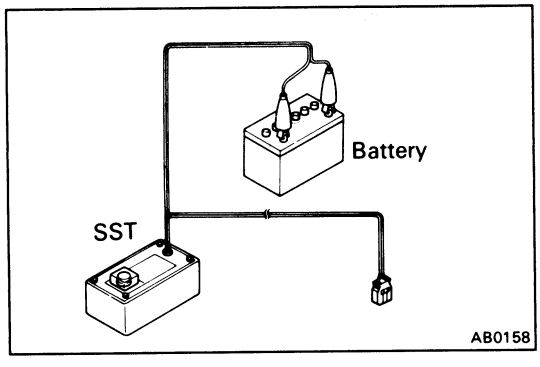

AB0158

4. CONFIRM FUNCTIONING OF SST (SEE PAGE AB-88)

SST 09082-00700

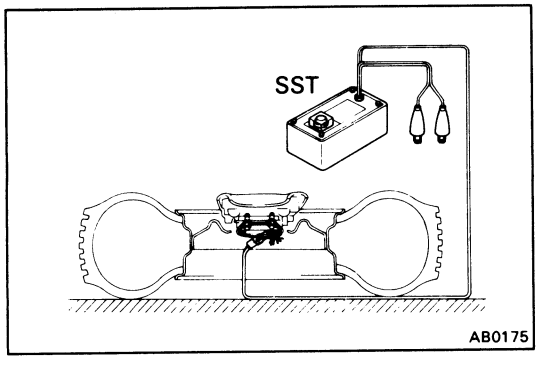

AB0175

5. INSTALL SST

CAUTION: Place the disc wheel on level ground.

(a) Connect the SST connector to the steering wheel pad connector.

SST 09082-00700

NOTICE: To avoid damaging the SST connector and wire harness, do not lock the secondary lock of the twin lock. Also, provide some slack for the SST wire harness inside the disc wheel.

(b) Move the SST to at least 10 m (33 ft) away from the steering wheel pad tied down on the disc wheel.

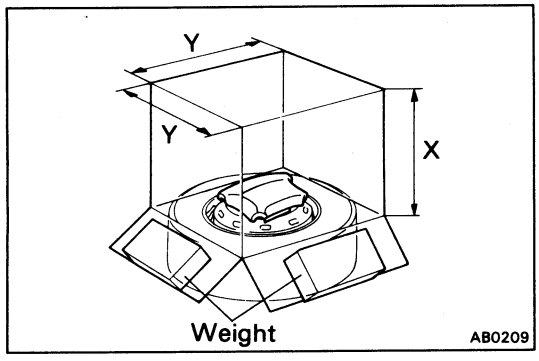

6. COVER STEERING WHEEL PAD WITH CARDBOARD BOX OR TIRES

(Covering Method Using Cardboard Box)

Cover the steering wheel pad with the cardboard box and weigh the cardboard box down in four places with a at least 20 kg (44 lb, 196 N).

Size of cardboard box: Must exceed the following dimensions –

X = 460 mm (18.11 in.)
When dimension Y of the cardboard box exceeds the diameter of the disc wheel with tire the steering wheel pad is tied to –
X = 460 mm (18.11 in.) + width of tire
Y = 650 mm (25.59 in.)

NOTICE: If a cardboard box smaller than the size specified is used, the cardboard box will be broken by the shock of the airbag deployment.

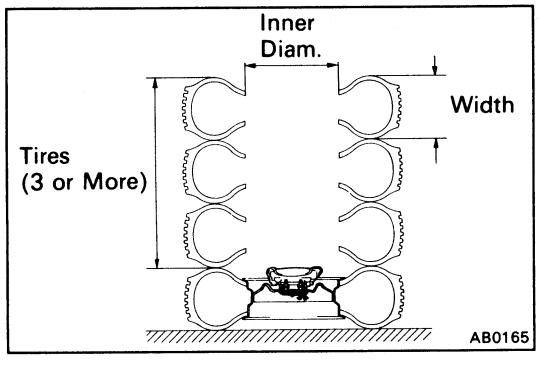

(Covering Method Using Tires)

Place at least three tires without disc wheel on top of the disc wheel with tire to which the steering wheel pad is tied.

Tire size: Must exceed the following dimensions –
Width 185 mm (7.28 in.)
Inner diam. 360 mm (14.17 in.)

CAUTION: Do not use tires with disc wheels.

NOTICE: The tires may be marked by the airbag deployment, so use redundent tires.

7. AIRBAG DEPLOYMENT

(a) Connect the SST red clip to the battery positive (+) terminal and the black clip to the battery negative (–) terminal.

(b) Confirm that no-one is within 10 m (33 ft) of the disc wheel the steering wheel pad is tied to.

(c) Press the SST activation switch and deploy the airbag.

HINT: The airbag deploys simultaneously as the LED of the SST activation switch lights up.

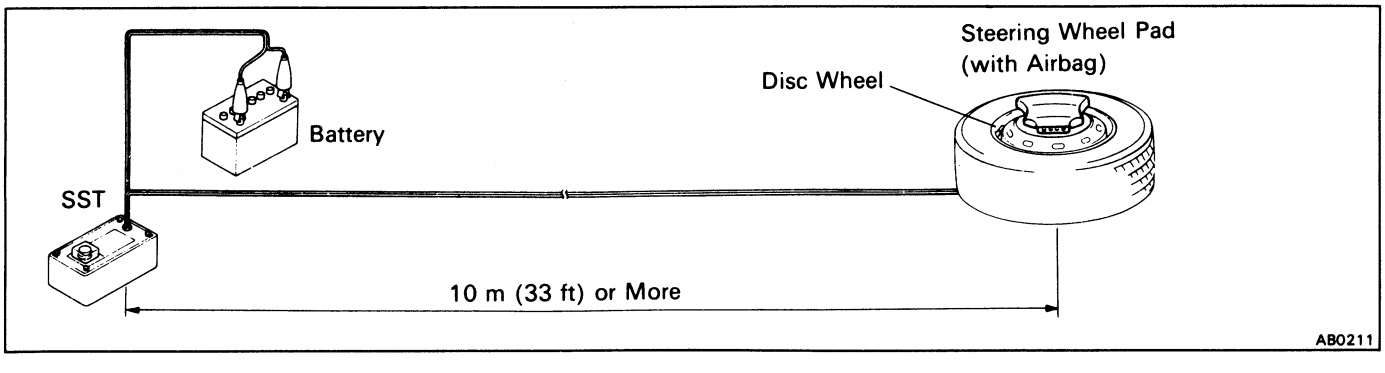

8. DISPOSAL OF STEERING WHEEL PAD (WITH AIRBAG)

CAUTION:

- **The steering wheel pad is very hot when the airbag is deployed, so leave it alone for at least 30 minutes after deployment.**
- **Use gloves and safety glasses when handling a steering wheel pad with deployed airbag.**
- **Do not apply water, etc. to a steering wheel pad with deployed airbag.**
- **Always wash your hands with water after completing the operation.**

(a) Remove the steering wheel pad from the disc wheel.

(b) Place the steering wheel pad in a vinyl bag, tie the end tightly and dispose of it the same way as other general parts.

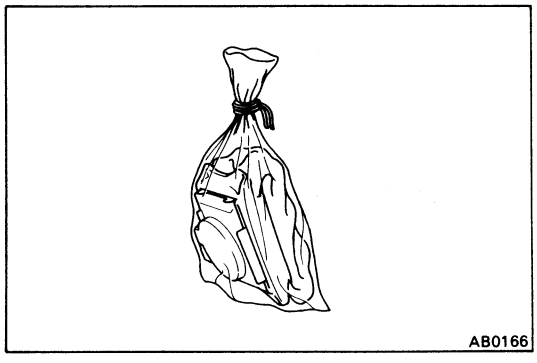
AB0166

CONFIRM FUNCTIONING OF SST

When deploying the airbag, always use the specified SST: SRS AIRBAG DEPLOYMENT TOOL.

SST 09082-00700

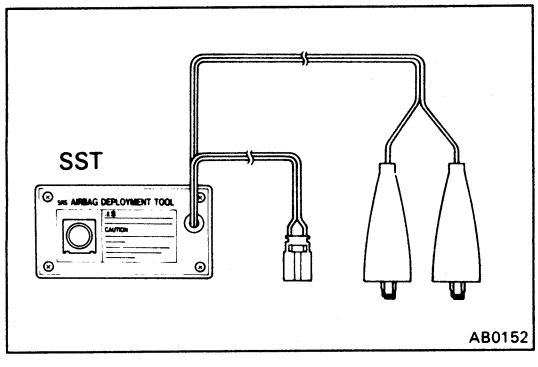

AB0152

1. CONNECT SST TO BATTERY

Connect the red clip of the SST to the battery positive (+) terminal and the black clip to the battery negative (−) terminal.

HINT: Do not connect the yellow connector which connects with the airbag system.

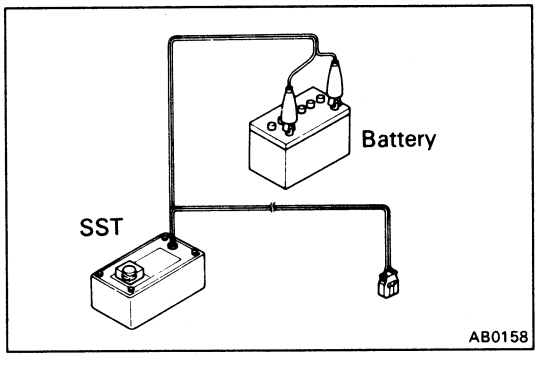

AB0158

2. CONFIRM FUNCTIONING OF SST

Press the SST activation switch, and confirm the LED of the SST activation switch lights up.

CAUTION: If the LED lights up when the activation switch is not being pressed, SST malfunction is probable, so definitely do not use the SST.

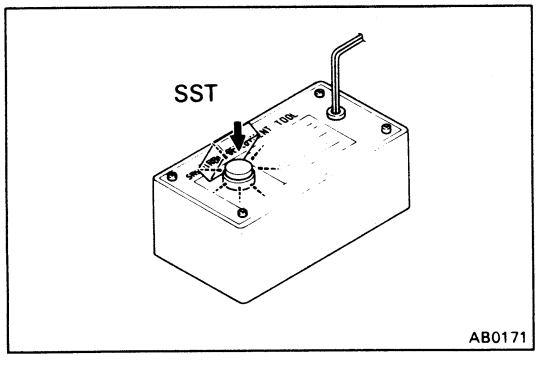

AB0171

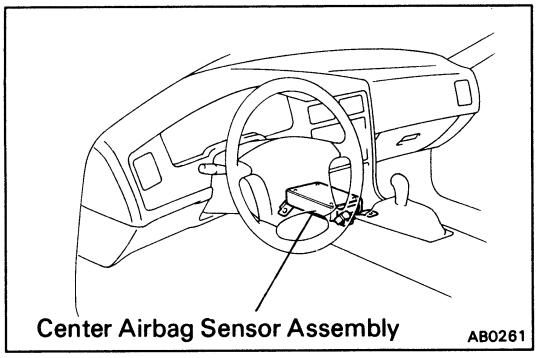

DISPOSAL OF CENTER AIRBAG SENSOR ASSEMBLY

The center airbag sensor assembly contains mercury.
After performing replacement, do not destroy the old part. When scrapping the vehicle or replacing the center airbag sensor assembly itself, remove the center airbag sensor assembly and dispose of it as toxic waste.

BODY ELECTRICAL SYSTEM

	Page
GENERAL INFORMATION	BE-2
POWER SOURCE	BE-6
IGNITION SWITCH	BE-10
LIGHTING SYSTEM	BE-13
WIPER AND WASHER SYSTEM	BE-43
COMBINATION METER	BE-48
DEFOGGER SYSTEM	BE-63
POWER WINDOW CONTROL SYSTEM	BE-67
POWER DOOR LOCK CONTROL SYSTEM	BE-73
POWER MIRROR CONTROL SYSTEM	BE-80
CRUISE CONTROL SYSTEM	BE-82
THEFT DETERRENT SYSTEM	BE-115
AUDIO	BE-132
CLOCK	BE-160

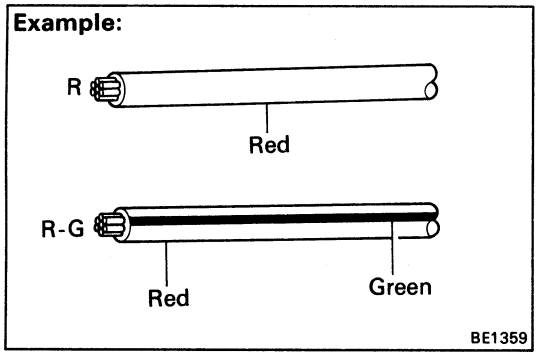

GENERAL INFORMATION

Wiring color code

Wire colors are indicated by an alphabetical code.

B	= Black	L	= Blue	R	= Red
BR	= Brown	LG	= Light Green	V	= Violet
G	= Green	O	= Orange	W	= White
GR	= Gray	P	= Pink	Y	= Yellow

The first letter indicates the basic wire color and the second letter indicates the color of the stripe.

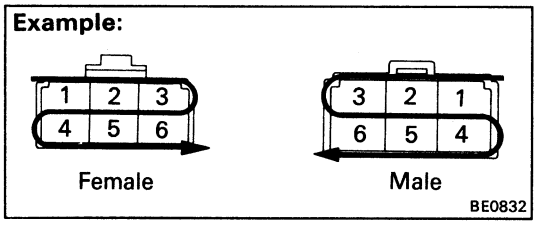

Connector

1. PIN NUMBER OF FEMALE CONNECTOR

Numbered in order from upper left to lower right.

2. PIN NUMBER OF MALE CONNECTOR

Numbered in order from upper right to lower left.

HINT: When connectors with different or the same number of terminals are used with the same parts, each connector name (letter of the alphabet) and pin number is specified.

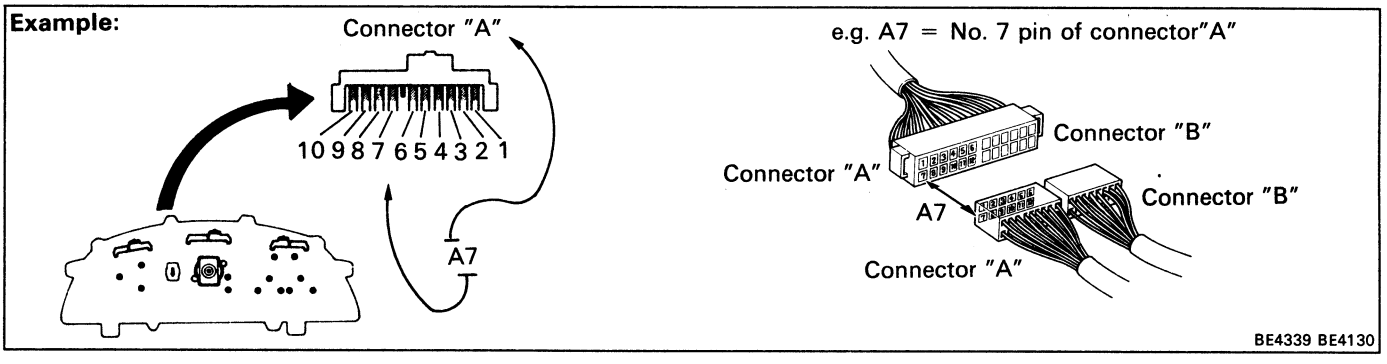

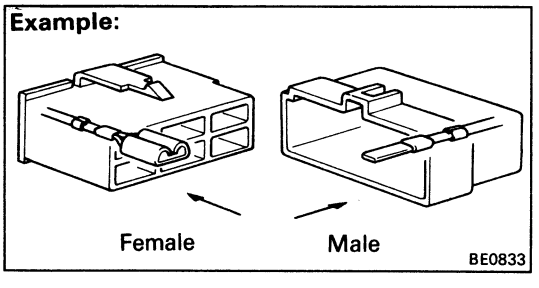

3. DISTINCTION OF MALE AND FEMALE CONNECTORS

Male and female connectors are distinguished by shape of their internal pins.

(a) All connectors are shown from the open end, and the lock is on top.

(b) To pull apart the connectors, pull on the connector itself, not the wires.

HINT: Check to see what kind of connector you are disconnecting before pulling apart.

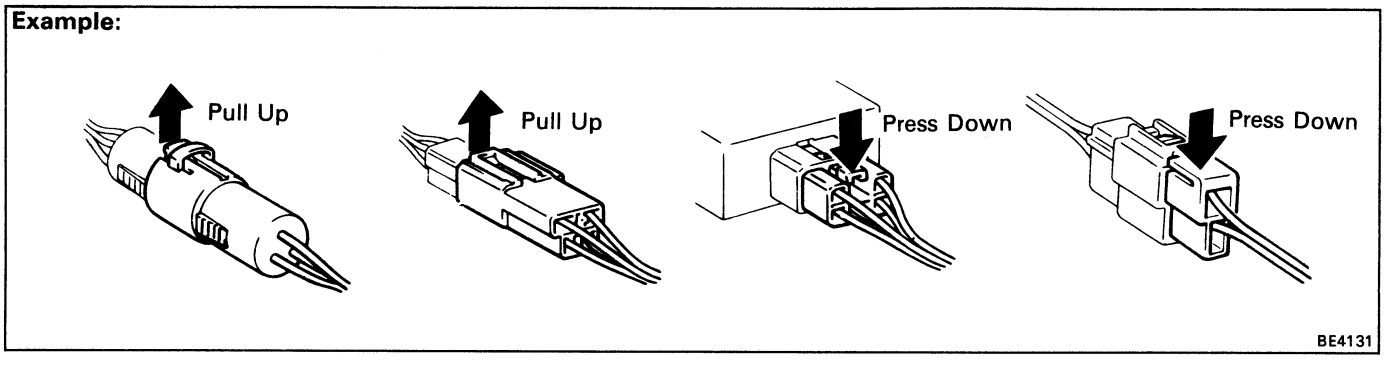

Fuse

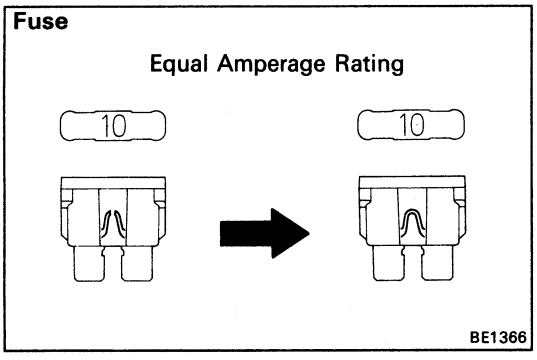

High Current Fuse and Medium Current Fuse

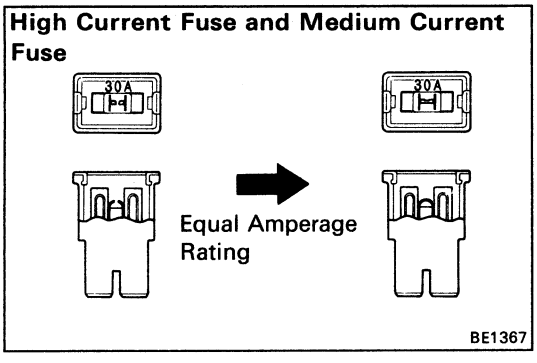

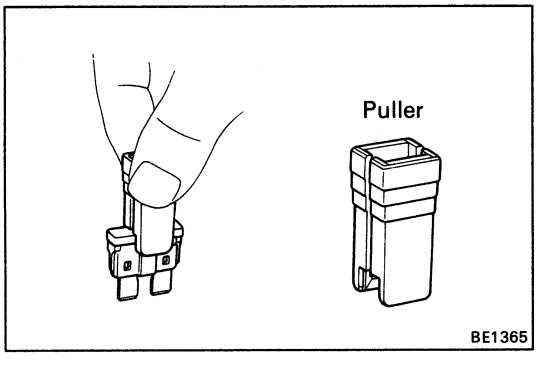

Replacement of Fuse

HINT: If replacing the fuse be sure to replace it with a fuse with and equal amperage rating.

NOTICE:

1. **Turn off all electrical components and the ignition switch before replacing a fuse. Do not exceed the fuse amperage rating.**
2. **Always use a fuse puller for removing and inserting a fuse. Remove and insert straight in and out without twisting. Twisting could force open the terminals too much, resulting in a bed connection.**

If a fuse continues to blow, a short circuit is indicated. The system must be checked by a qualified technician.

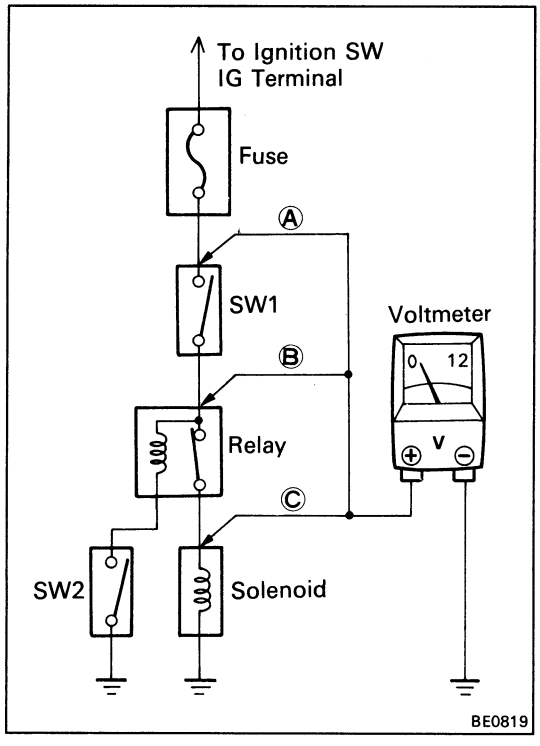

Check for Voltage

(a) Establish conditions in which voltage is present at the check point.

Example:

Ⓐ – Ignition switch on.
Ⓑ – Ignition switch and switch 1 (SW1) on.
Ⓒ – Ignition switch, switch 1 (SW1) and relay on (switch 2 (SW2) off).

(b) Using a voltmeter, connect the negative (–) lead to a good ground point or negative (–) battery terminal and the positive (+) lead to the connector or component terminal. This check can be done with a test bulb instead of a voltmeter.

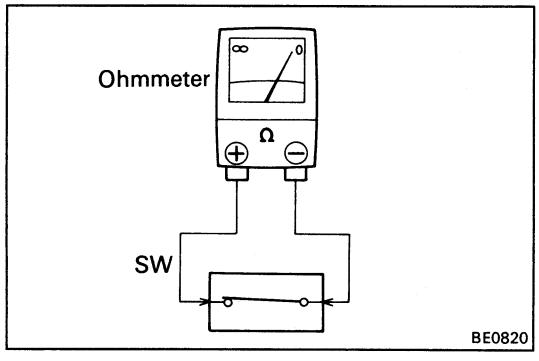

Check for Continuity and Resistance

(a) Disconnect the battery terminal or wire so there is no voltage between the check points.

(b) Contact the two leads of an ohmmeter to each of the check points.

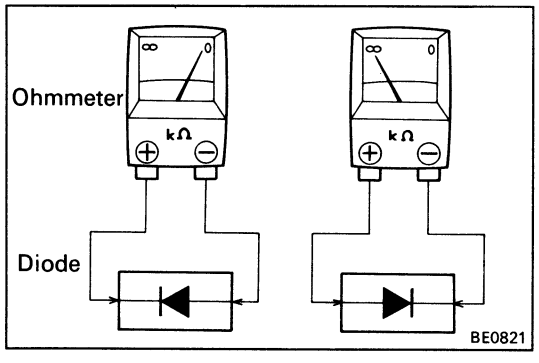

If the circuit has diodes, reverse the two leads and check again.

When contacting the negative (–) lead to the diode positive (+) side and the positive (+) lead to the negative (–) side, there should be continuity. When contacting the two leads in reverse, there should be no continuity.

HINT: Specifications may vary depending on the type of tester, so refer to the tester's instruction manual before performing the inspection.

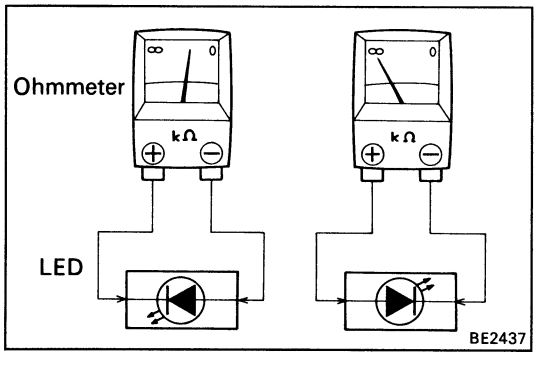

Check LED (Light Emitting Diode) in the same manner as that for diodes.

- Use a tester with a power source of 3V or greater to overcome the circuit resistance.
- If a suitable tester is not available, apply battery voltage and check that the LED that the LED lights up.

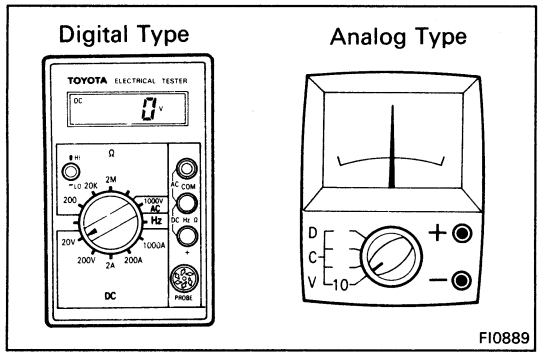

(c) Use a volt/ohmmeter with high impedance (10 k/V minimum) for troubleshooting of the electrical circuit.

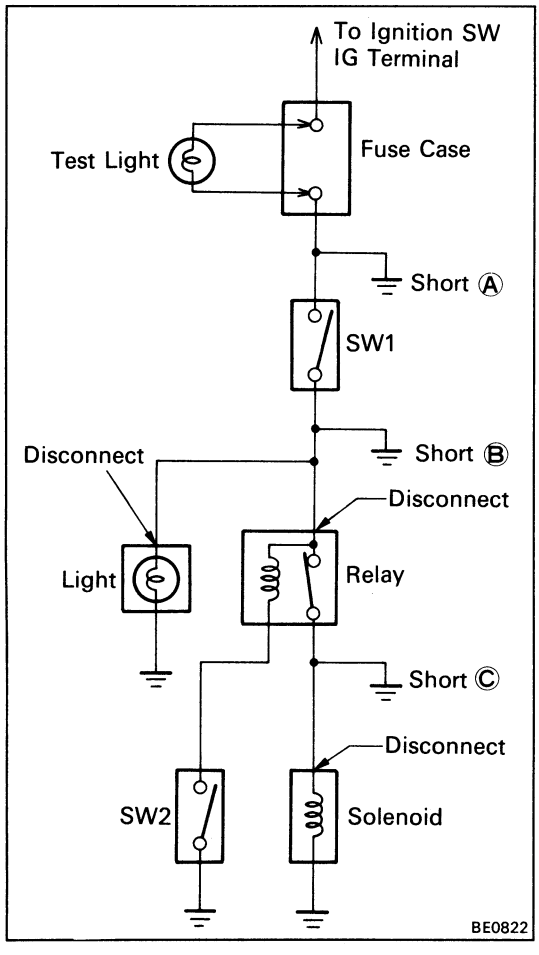

Check for Short Circuit

(a) Remove the blown fuse and eliminate all loads from the fuse.

(b) Connect a test bulb in place of the fuse.

(c) Establish conditions in which the test bulb comes on.

Example:
Ⓐ – Ignition switch on.
Ⓑ – Ignition switch and switch 1 (SW1) on.
Ⓒ – Ignition switch, switch 1 (SW1) and relay on (connect the relay) and switch 2 (SW2) off (or disconnect switch 2 (SW2)).

(d) Disconnect and reconnect the connectors while watching the test bulb.

The short lies between the connector where the test bulb stays lit and the connector where the bulb goes out.

(e) Find the exact location of the short by lightly shaking the problem wire along the body.

Electrical Parts

Before removing and inspecting the electrical parts, set the ignition switch to the LOCK position and disconnect the negative (–) terminal cable from the battery.

CAUTION: Work must not be started until after at least 20 seconds or longer from the time the negative (–) terminal cable is disconnected.

SRS Airbag System

Failure to carry out service operations in the correct sequence could cause the airbag system to deploy, possibly leading to a serious accident.

When removal or installation of the parts and the yellow wire harness and connector for the airbag is necessary, refer to the precautionary notices in the AB section before performing the operation.

POWER SOURCE

Parts Location

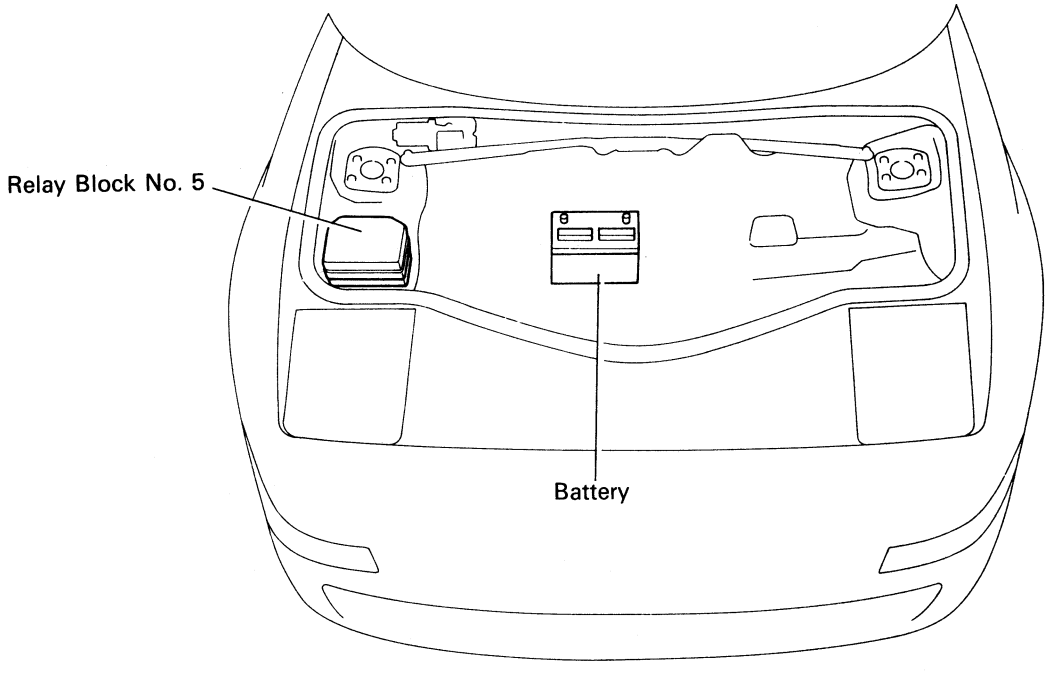

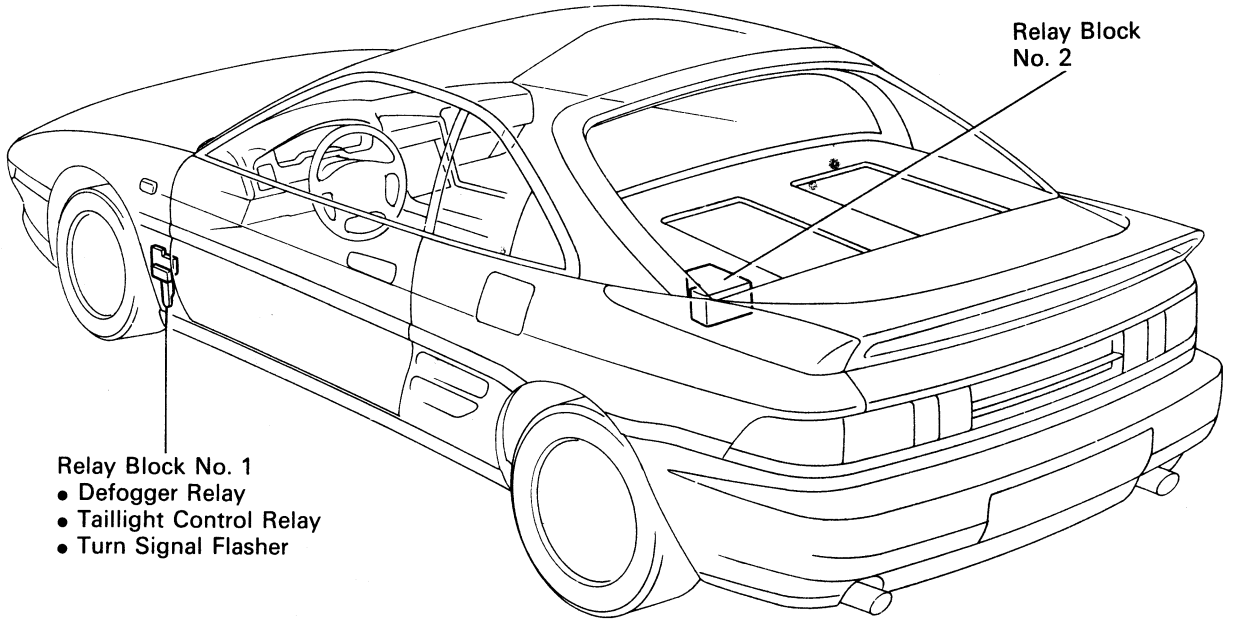

BE4932
BE4933

RELAY BLOCK NO. 1

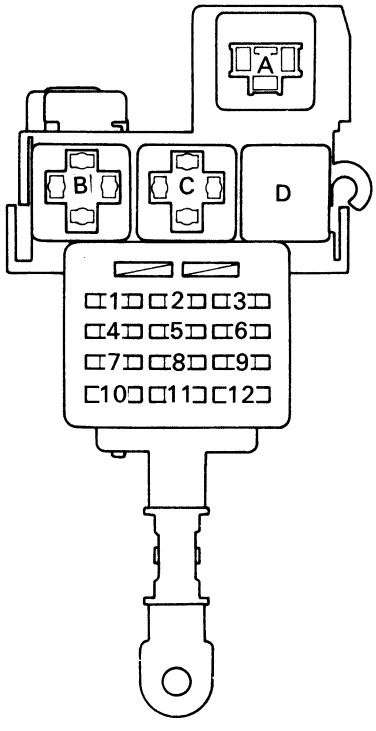

	Fuse	
1.	TAIL	15 A
2.	GAUGE	7.5 A
3.	STOP	15 A
4.	–	
5.	TURN	7.5 A
6.	DOOR	20 A
7.	–	
8.	WIPER	20 A
9.	PWR	30 A
10.	RAD CIG	15 A
11.	DEFOG	20 A
12.	–	

Relays

A. TURN SIGNAL FLASHER
B. DEFOGGER
C. TAIL (Taillight Control)
D. –

RELAY BLOCK NO. 2

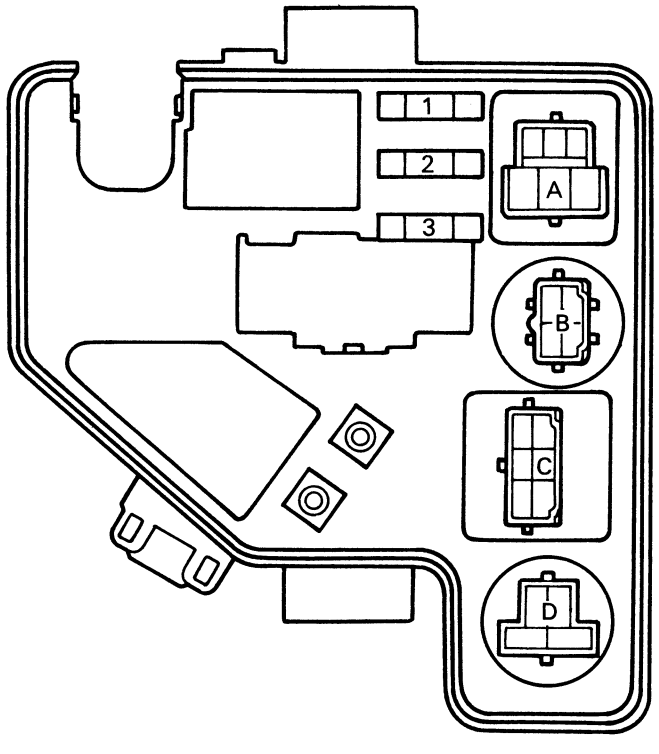

	Fuses	
1.	EFI	15 A
2.	VENT	20 A
3.	ECU-IG	7.5 A

Relays

A. IGN
B. EFI
C. C/OPN
D. VENT

BE5066
BE4934

RELAY BLOCK NO. 5

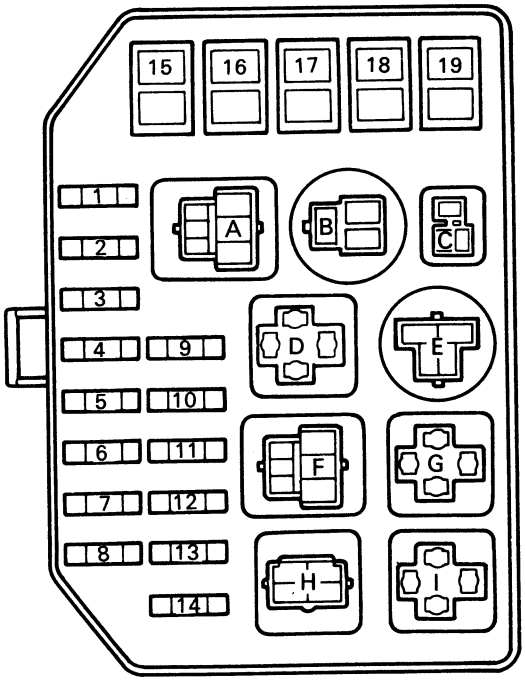

Fuses and High Current Fuses

1.	ALT SENCING	7.5 A	
2.	CDS FAN	30 A	
3.	RAD FAN	30 A	
4.	FR FOG	15 A	
5.	–		
6.	–		
7.	HEAD (LH)	15 A	
8.	HEAD (RH)	15 A	
9.	A.C	10 A	
10.	ECU-B	7.5 A	
11.	AM2	7.5 A	
12.	HAZ-HORN	15 A	
13.	RTR	30 A	
14.	DOME	15 A	
15.	AMI	50 A	H-Fuse
16.	HTR	40 A	H-Fuse
17.	A.B.S.	80 A	H-Fuse
18.	ALT	120A	H-Fuse
19.	AM2	40A	H-Fuse

Relays

A. HTR
B. H-LP
C. HORN
D. FAN NO. 2
E. FAN NO. 1
F. FAN MAIN
G. FAN NO. 3
H. –
I. FR FOG

BE4937

Wiring Diagram

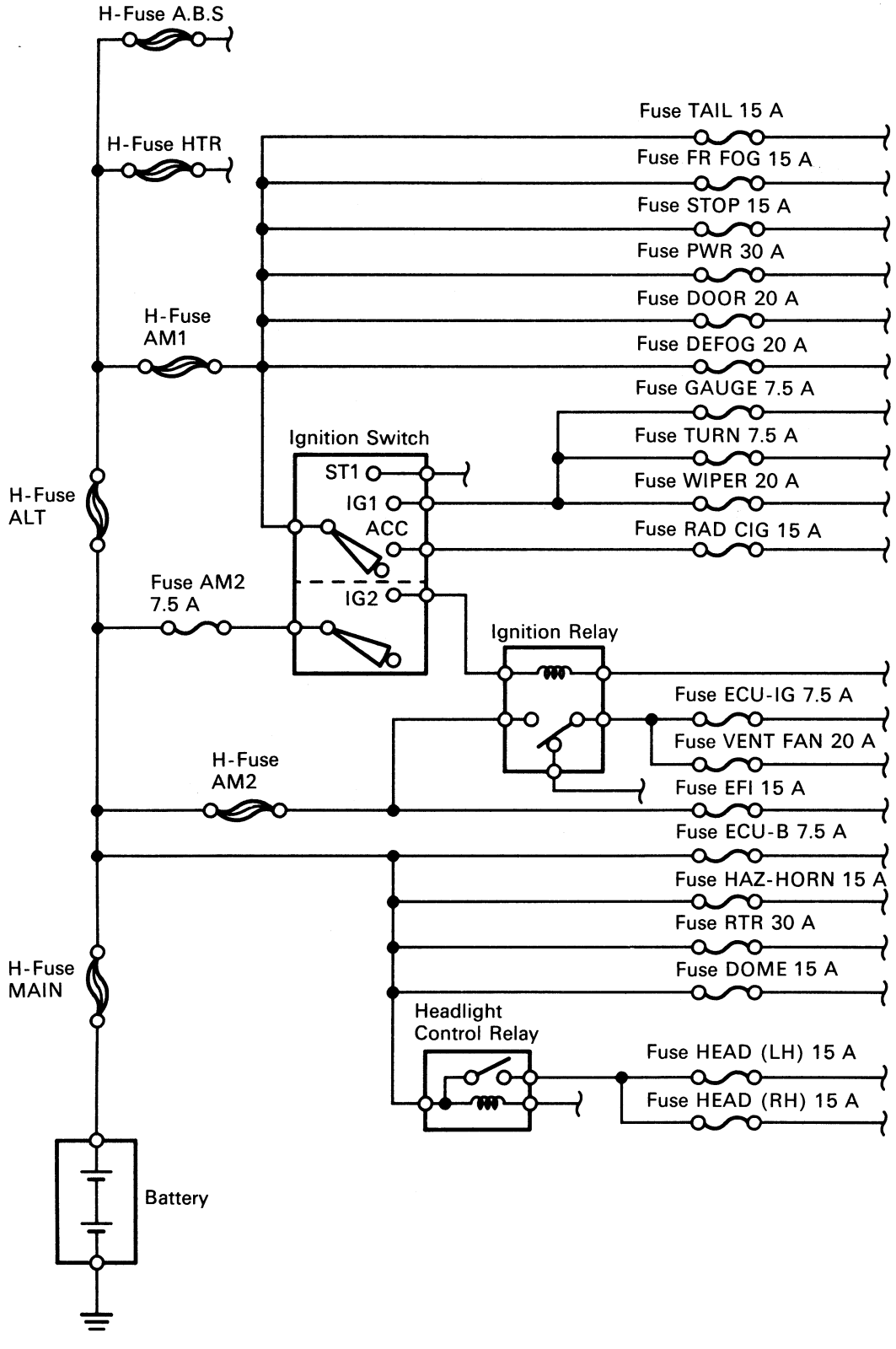

BE5226

IGNITION SWITCH

Parts Location

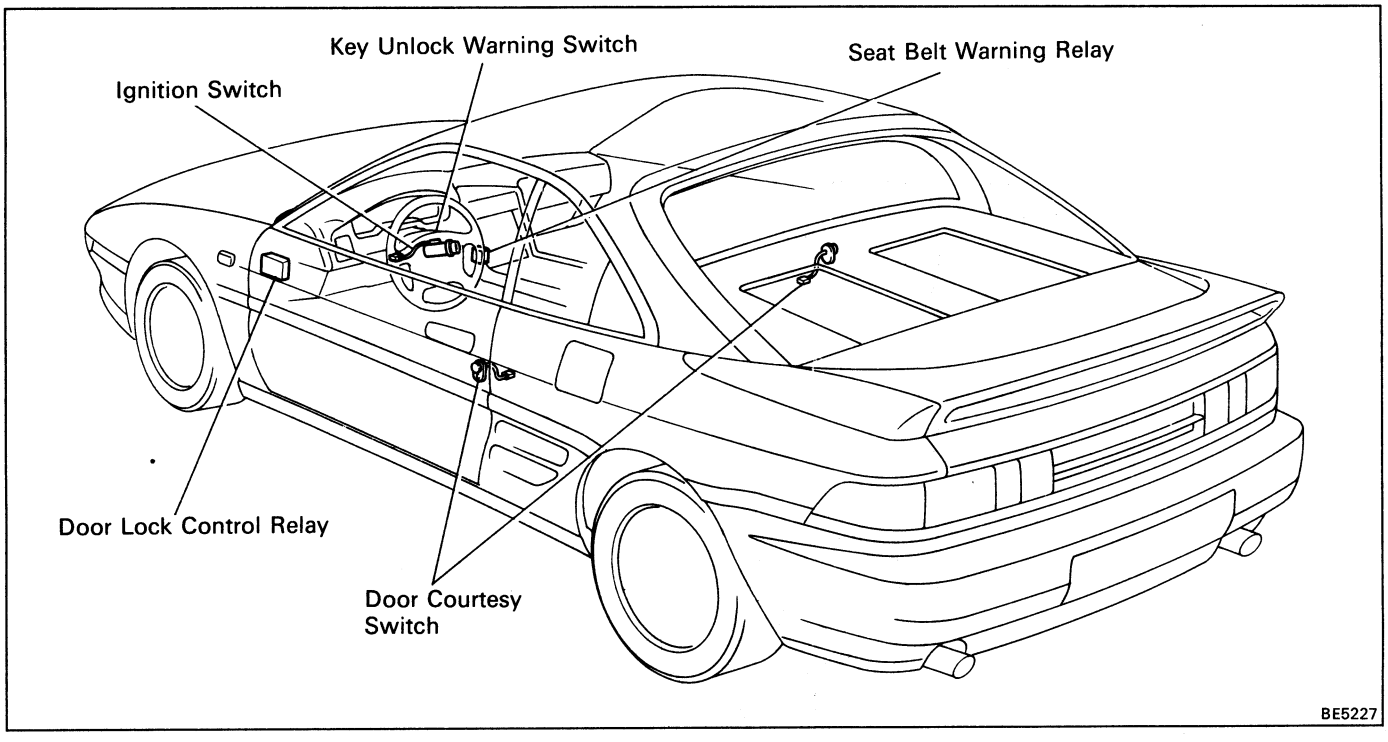

Wiring Diagram

IGNITION SWITCH

See Power Source Section on page BE-9.

KEY CONFINE PREVENTION SYSTEM

See Power Door Lock Control System on page BE-74.

KEY UNLOCK WARNING SYSTEM

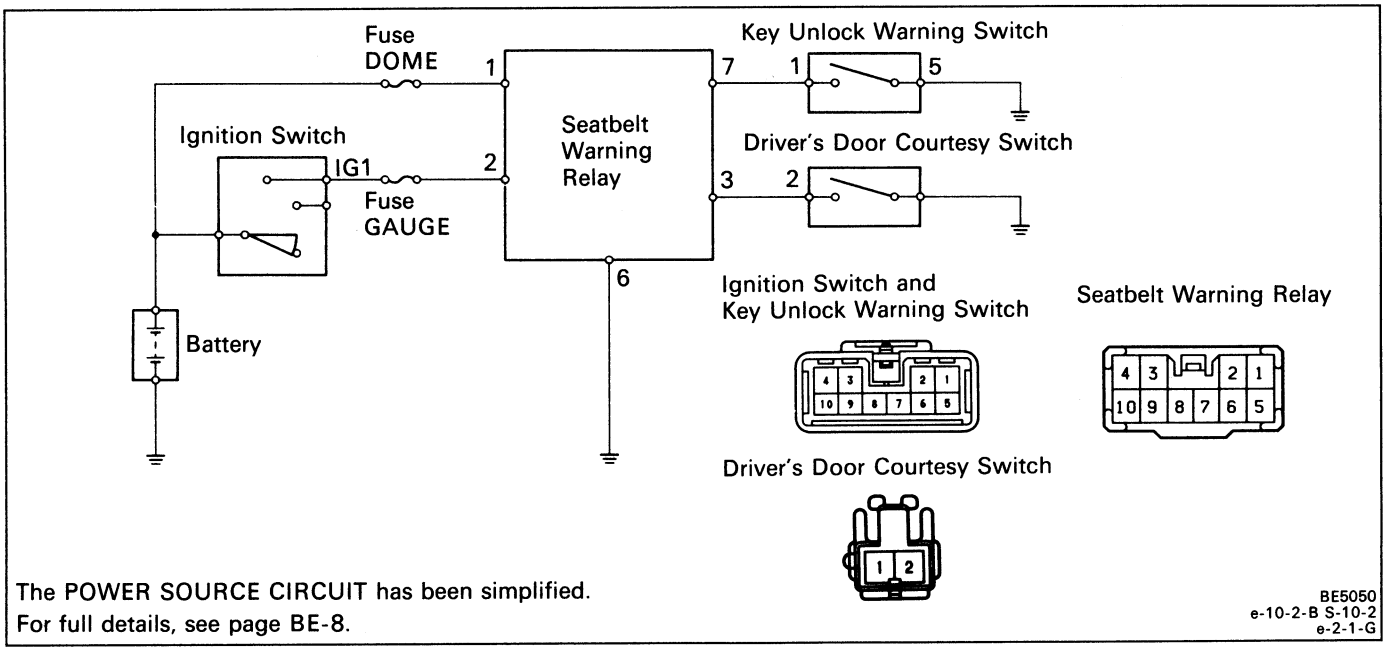

The POWER SOURCE CIRCUIT has been simplified.
For full details, see page BE-8.

Troubleshooting

Problem	Possible cause	Remedy	Page
Ignition switch is not seat to each position	Ignition switch faulty Power source circuit faulty	Check switch Repair as necessary	BE-11 BE-9
Key confine prevention system does not operate	Key unlock warning switch faulty Door courtesy switch faulty Door lock control relay faulty Wiring faulty	Check switch Check switch Check relay Repair as necessary	BE-11 BE-11 BE-11
Key unlock warning system does not operate	Key unlock warning switch faulty Door courtesy switch faulty Seatbelt Warning Relay faulty Wiring faulty	Check switch Check switch Check relay Repair as necessary	BE-11 BE-11 BE-12

Parts Inspection

Ignition System

INSPECT SWITCH (Ignition Switch /Continuity)

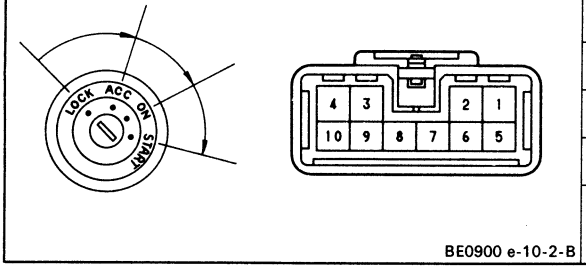

BE0900 e-10-2-B

Terminal / Switch position	2 IG1	3 ACC	4 AM1	6 ST2	7 ST1	9 IG2	10 AM2
LOCK							
ACC		○—○					
ON	○	○—○	○			○—○	
START	○		○	○	○	○—○	

If continuity is not as specified, replace the switch.

Key Confine Prevention System

1. **INSPECT SWITCHES (Key Unlock Warning Switch/Continuity)**

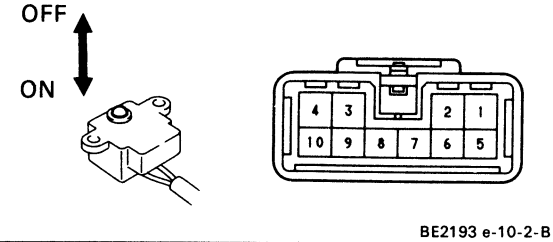

BE2193 e-10-2-B

Terminal / Switch position	1	5
OFF (Ignition Key removed)		
ON (Ignition Key set)	○—○	

If continuity is not as specified, replace the switch.

(Door Courtesy Switch)

See Step 1 on page BE-41.

2. **INSPECT DOOR LOCK CONTROL RELAY**

See Step 3 on page BE-78.

Key Unlock Warning System

1. **INSPECT SWITCHES**
   (Key Unlock Warning Switch)
   See Step 1 on page BE-11.
   (Door Courtesy Switch)
   See Step 1 on page BE-41.

2. **INSPECT RELAY**
   (Seatbelt Warning Relay 1 Relay Circuit)
   See step 3 on page BE-59.

LIGHTING SYSTEM

Parts Location

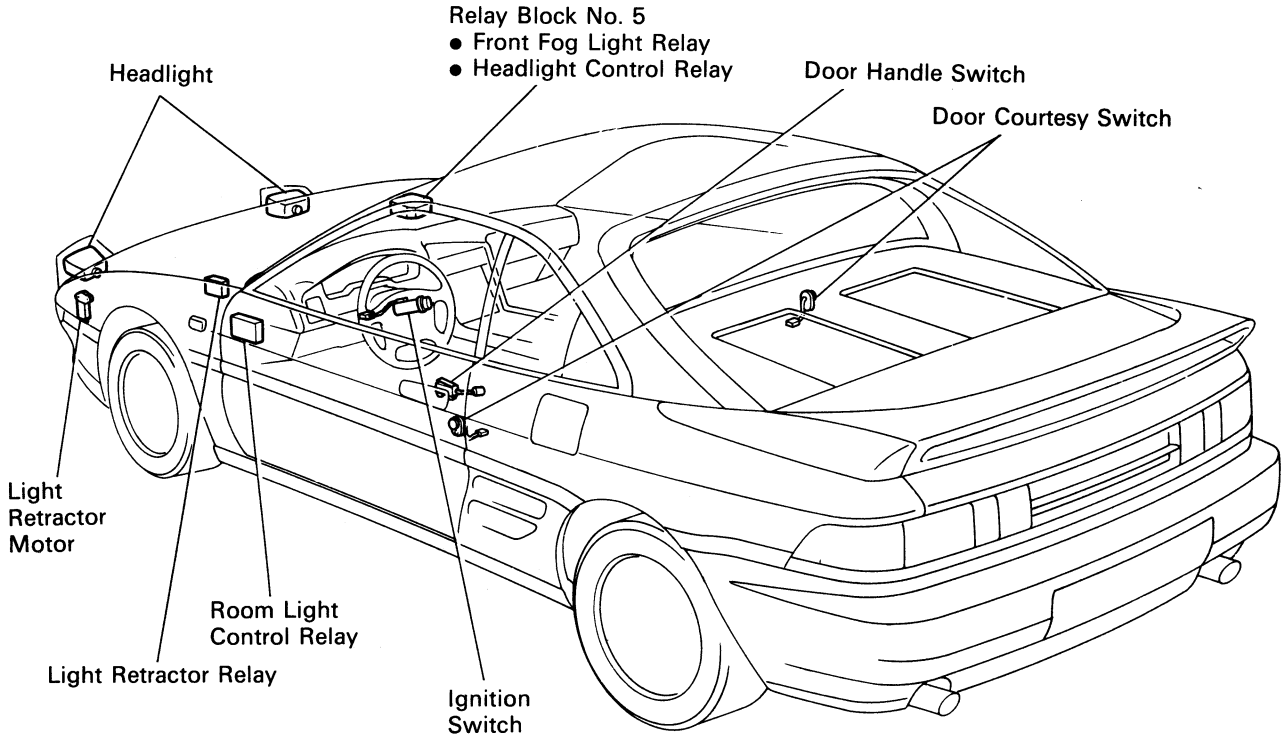

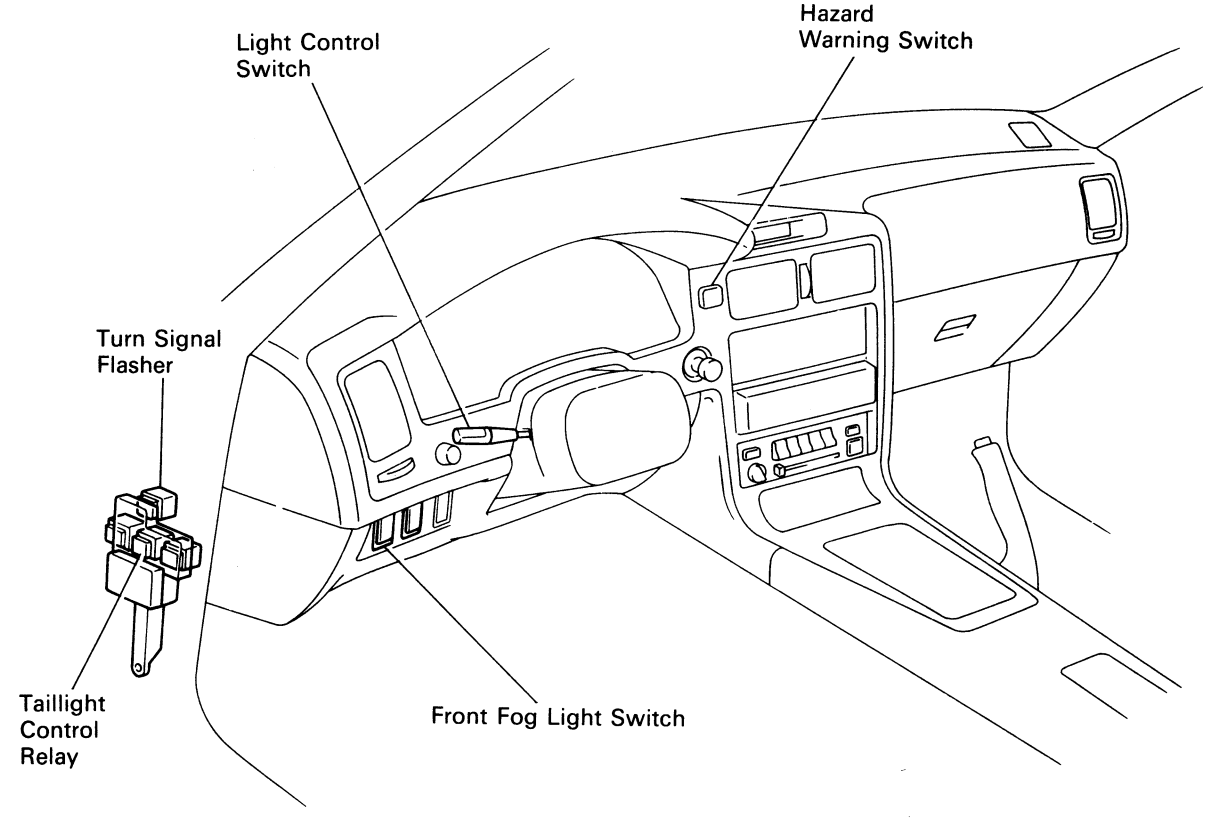

BE5228
BE5229

Wiring and Connector Diagrams

Lighting System (Headlight, Taillight and Front Fog Light System)

(USA)

w/o Light Auto Turn Off System

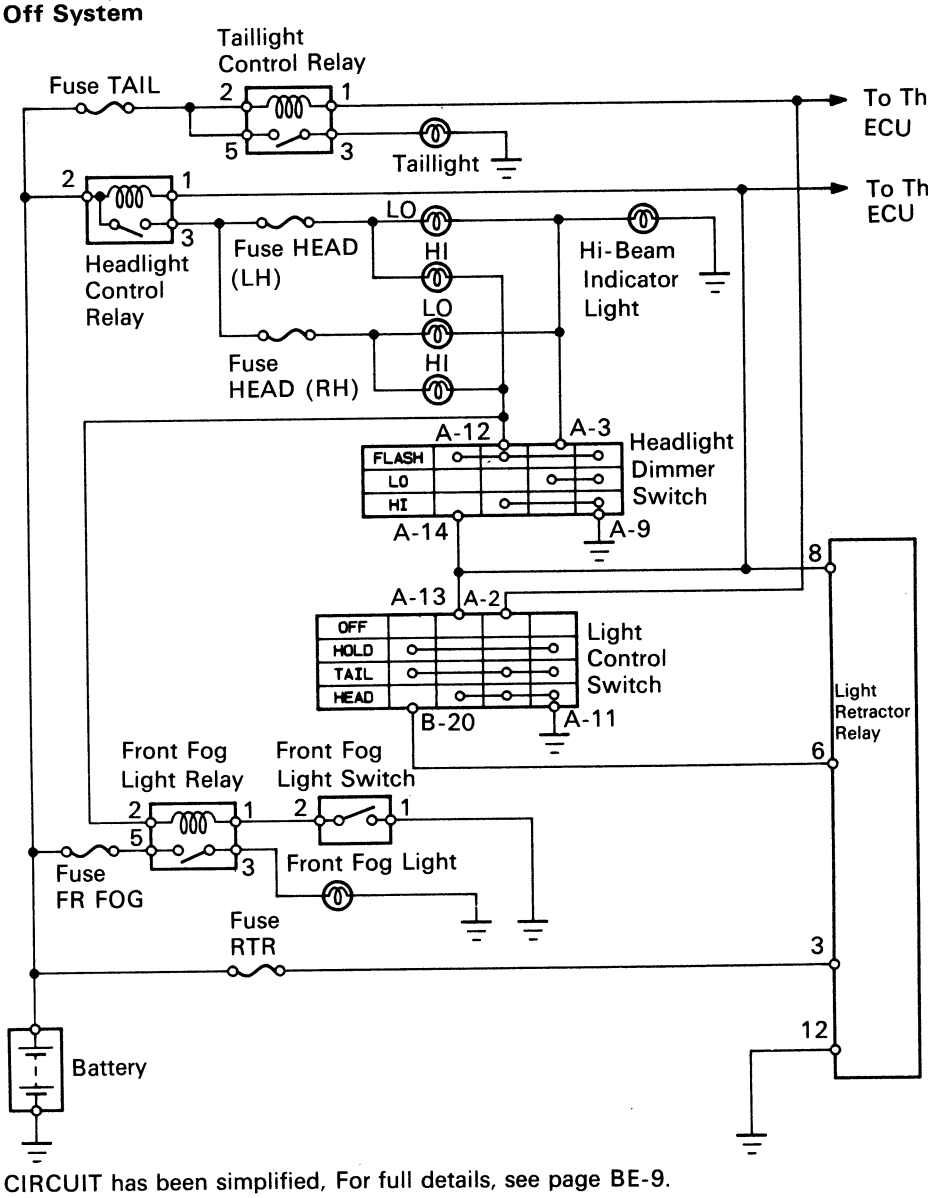

The POWER SOURCE CIRCUIT has been simplified, For full details, see page BE-9.

Headlight Control Relay

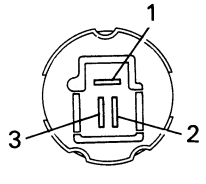

Taillight Control Relay

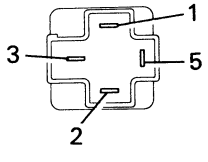

Front Fog Light Relay

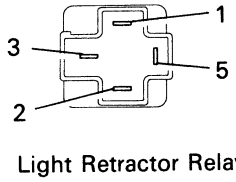

Front Fog Light Switch

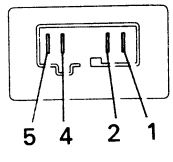

Light Control Switch Headlight Dimmer Switch

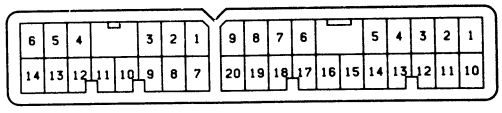

Connector "A" Connector "B"

Light Retractor Relay

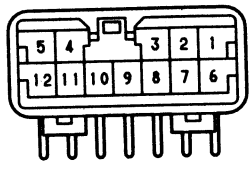

BE5230
BE2763 BE4049 BE4049 BE4707
V-34-2 e-12-2-A

w/ Light Auto Turn Off System

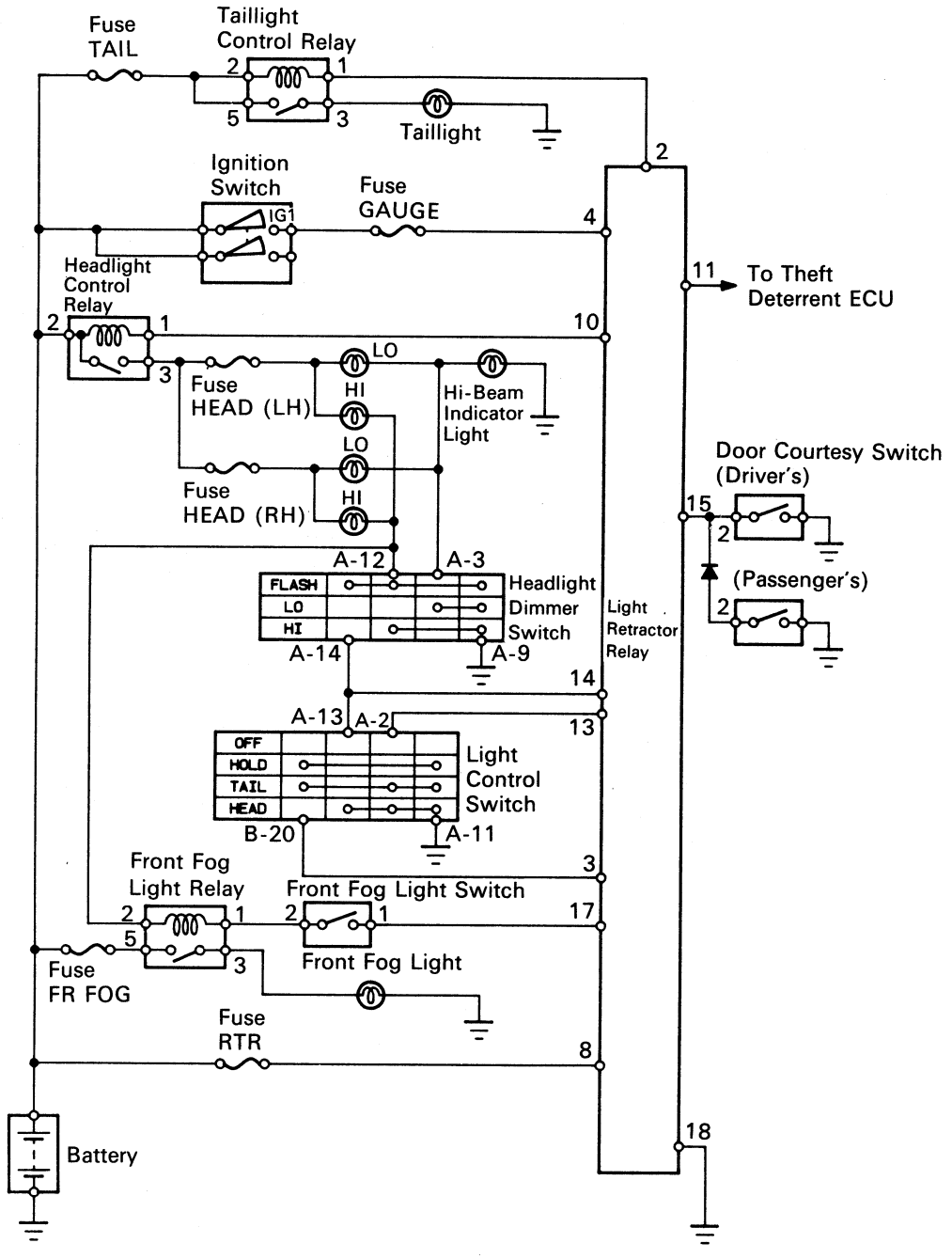

The POWER SOURCE CIRCUIT has been simplified, For full details, see page BE-9.

Headlight Control Relay

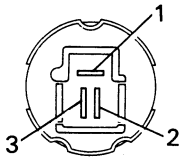

Taillight Control Relay

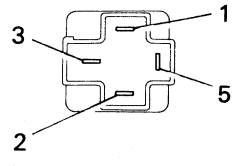

Front Fog Light Relay

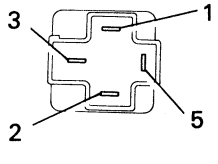

Front Fog Light Switch

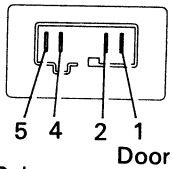

Light Control Switch, Headlight Dimmer Switch

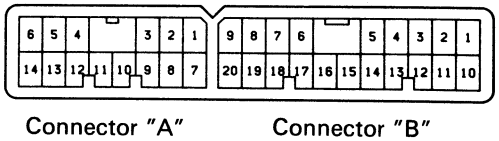

Connector "A" Connector "B"

Ignition Switch

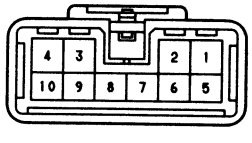

Light Retractor Relay

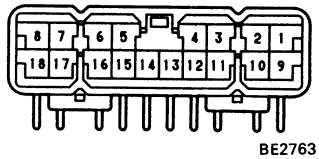

Door Courtesy Switch

BE5231
BE2763 BE4049 BE4049 BE4707
V-34-2 e-10-2-B e-18-2-A e-2-1-G

Daytime Running Light System (Headlight, Taillight and Front Fog Light System)

(CANADA)

w/o Light Auto Turn Off System

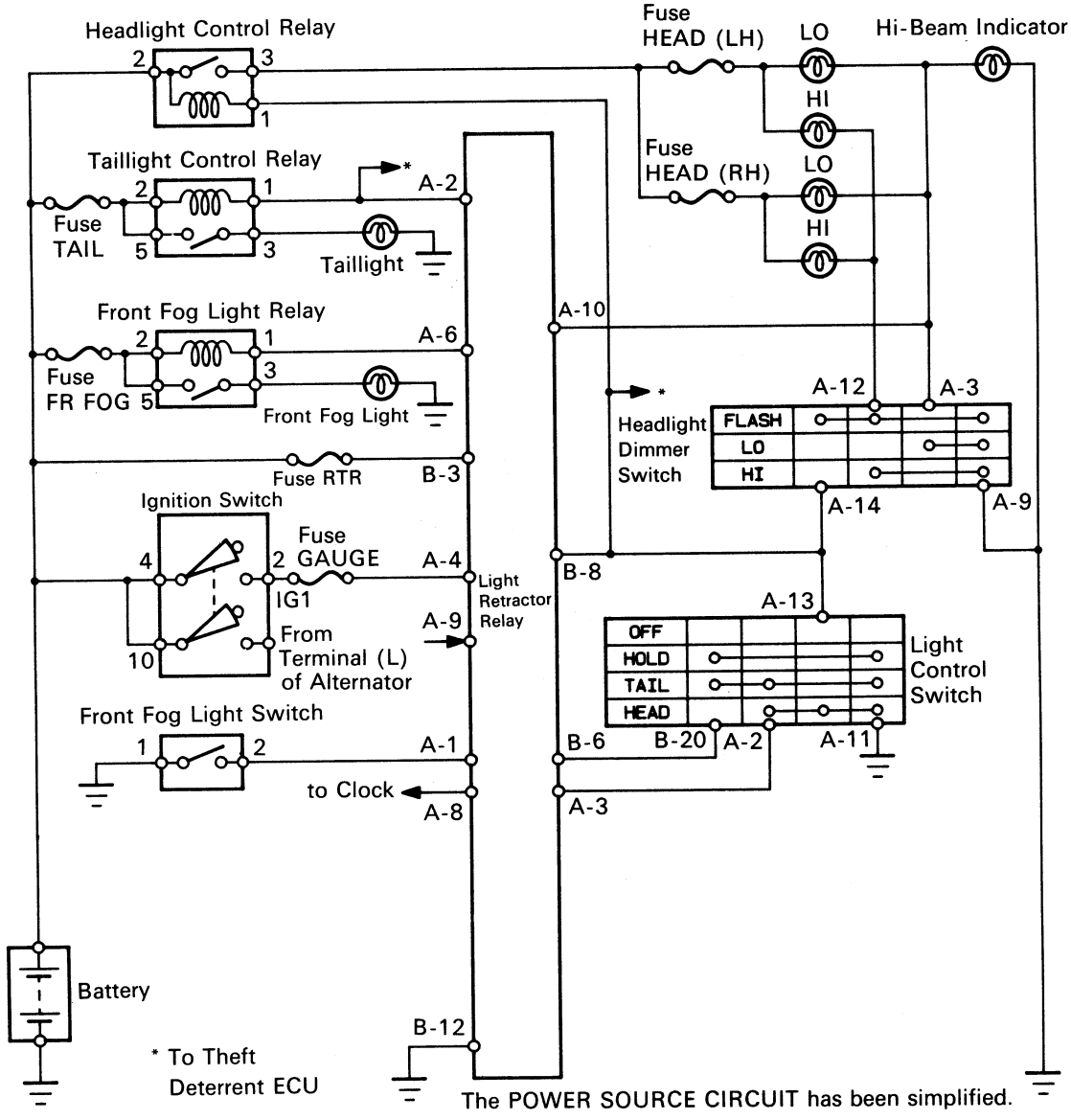

The POWER SOURCE CIRCUIT has been simplified.
For full details, see page BE-9.

Ignition Switch

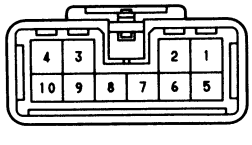

Headlight Control Relay

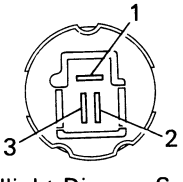

Taillight Control Relay

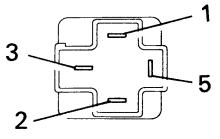

Front Fog Light Relay

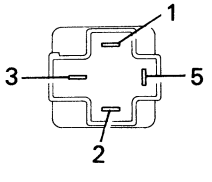

Front Fog Light Switch

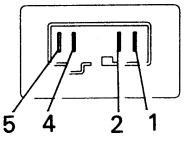

Light Control Switch, Headlight Dimmer Switch

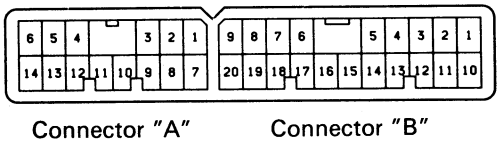

Connector "A" Connector "B"

Light Retractor Relay

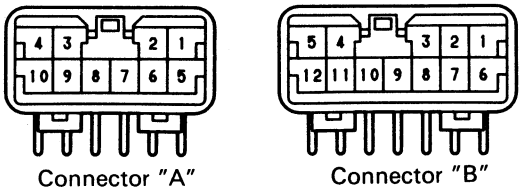

Connector "A" Connector "B"

BE5232
e-10-2-B BE2763 BE4049 BE4049 BE4707
V-34-2 e-10-2-A e-12-2-A

w/ Light Auto Turn Off System

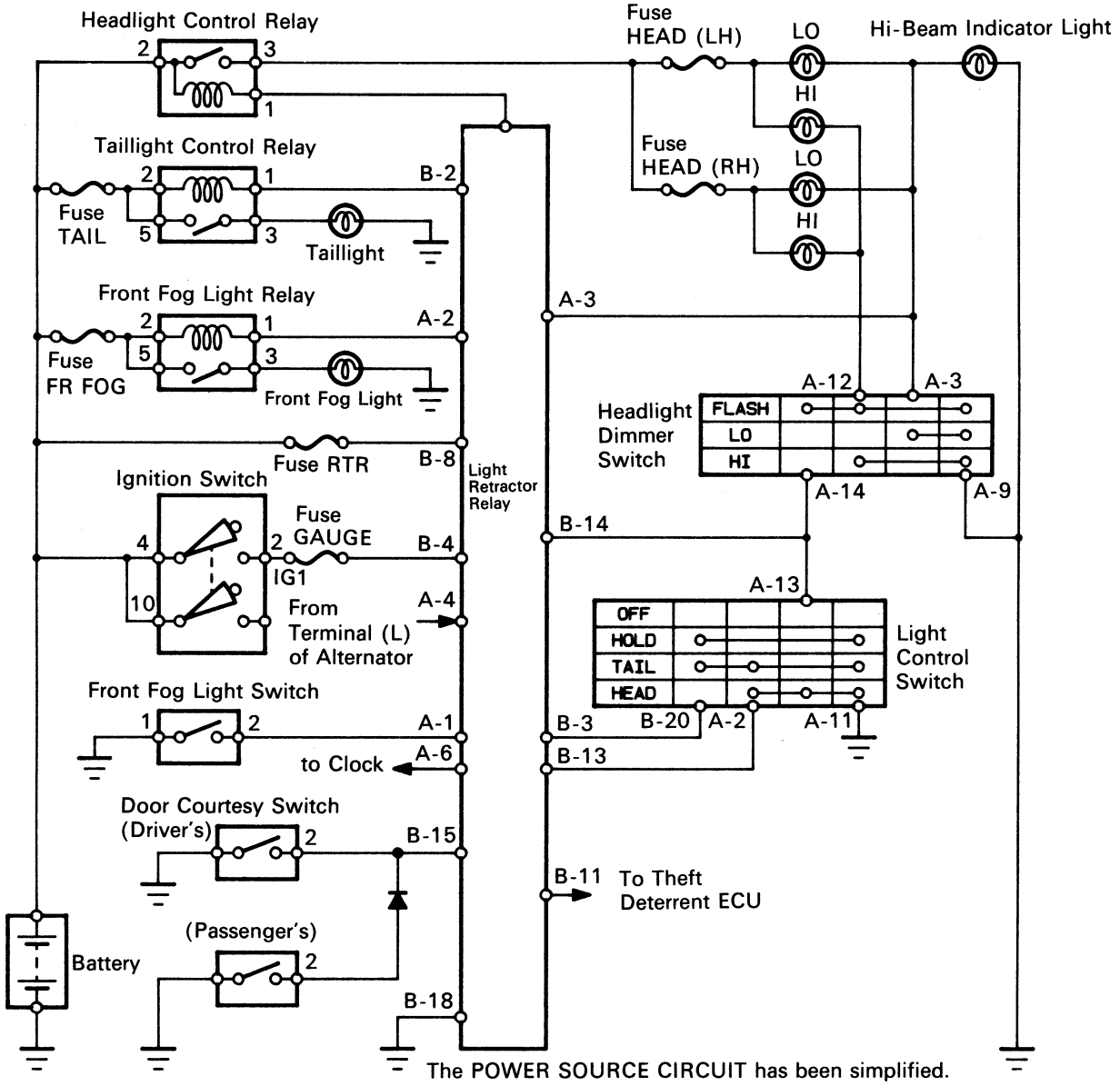

The POWER SOURCE CIRCUIT has been simplified.
For full details, see page BE-9.

Ignition Switch

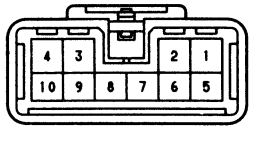

Headlight Control Relay

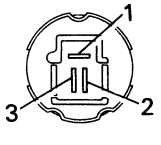

Taillight Control Relay

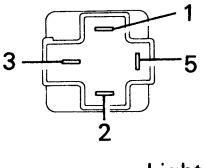

Front Fog Light Relay

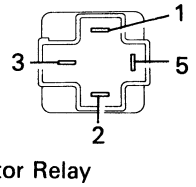

Front Fog Light Switch

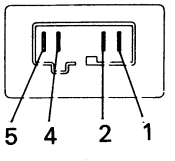

Light Control Switch, Headlight Dimmer Switch

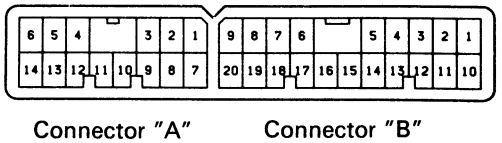

Connector "A" Connector "B"

Light Retractor Relay

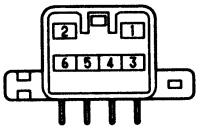

Connector "A"

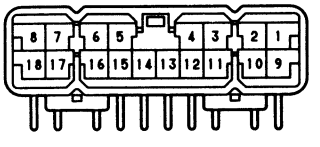

Connector "B"

Door Courtesy Switch

BE5233
e-10-2-B BE2763 BE4049 BE4049 BE4707
V-34-2 e-6-2-A e-18-2-A e-2-1-G

Light Retractable System (w/o Light Auto Turn Off System)

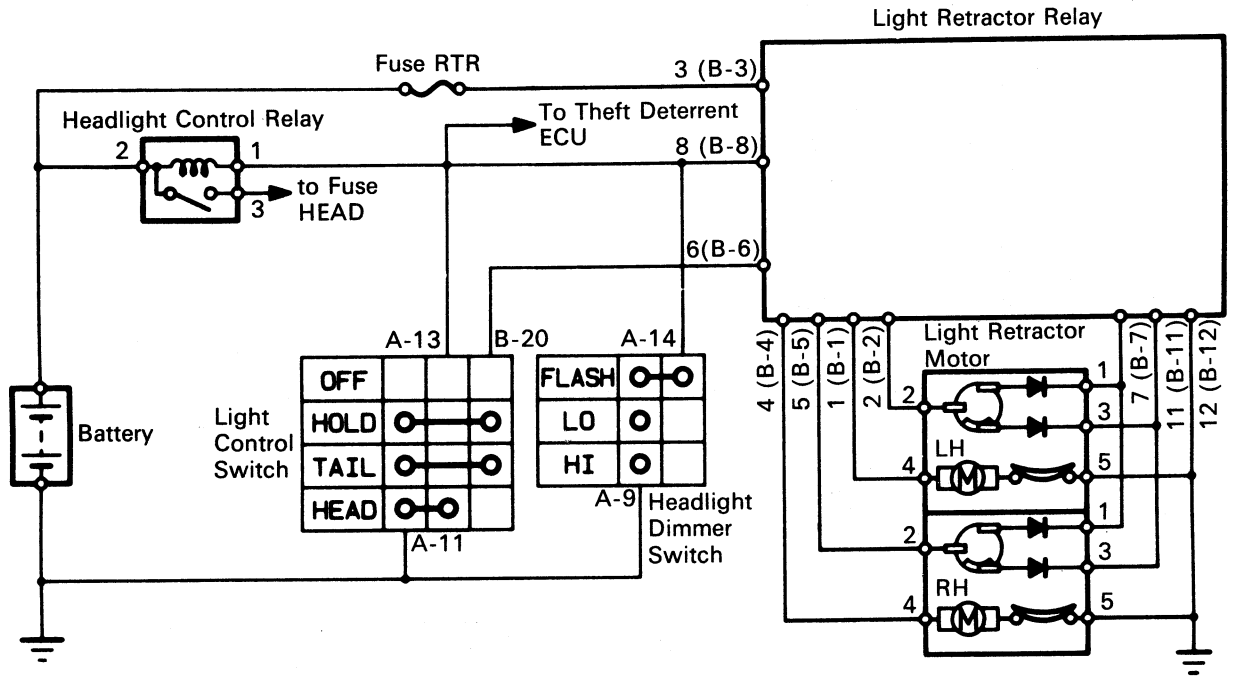

The terminals indicated in brackets ( ) are for CANADA models.
The POWER SOURCE CIRCUIT has been simplified. For full details, see page BE-9.

Headlight Control Relay

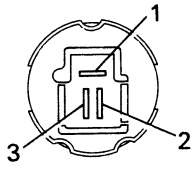

Light Control Switch, Headlight Dimmer Switch

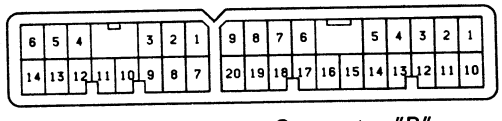

Connector "A" Connector "B"

Light Retractor Motor

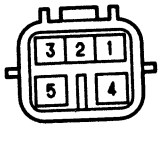

Light Retractor Relay

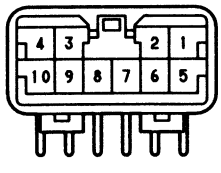

(USA)

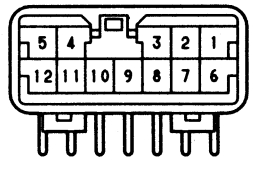

Connector "B" (CANADA)

(w/ Light Auto Turn Off System)

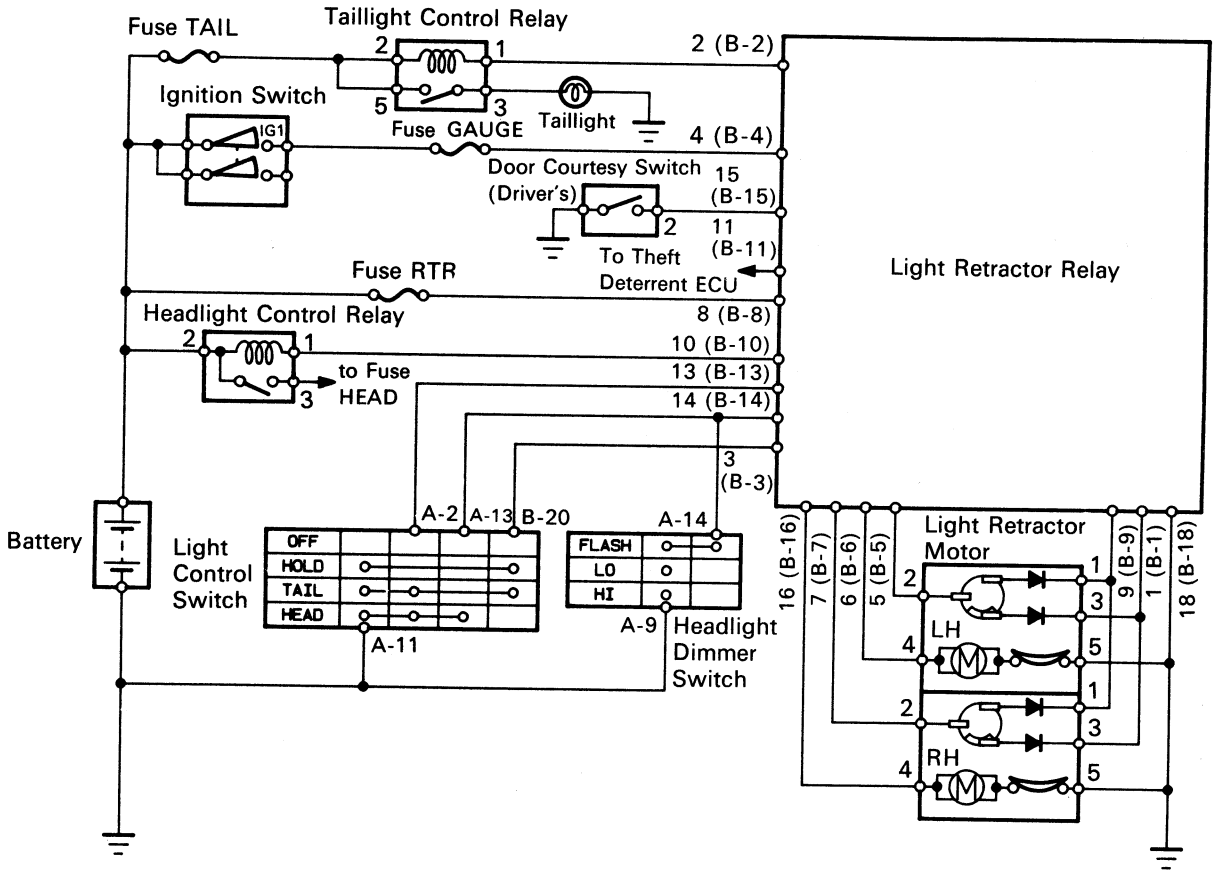

The terminals indicated in brackets ( ) are for CANADA models.
The POWER SOURCE CIRCUIT has been simplified. For full details, see page BE-9.

Headlight Control Relay

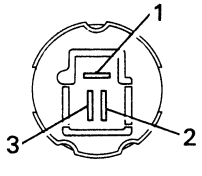

Light Control Switch, Headlight Dimmer Switch

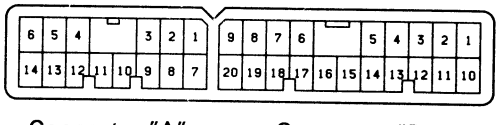

Connector "A" Connector "B"

Light Retractor Motor

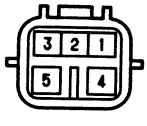

Light Retractor Relay

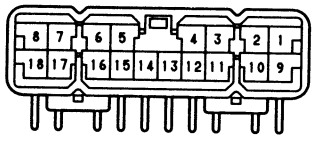

(USA)

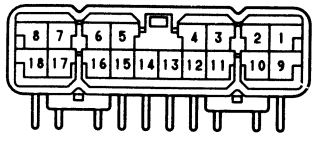

Connector "B" (CANADA)

Taillight Control Relay

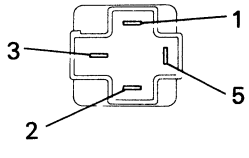

Ignition Switch

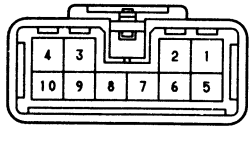

Door Courtesy Switch

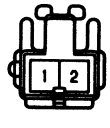

BE5234
BE2763 V-34-2
IJ-5-2-A e-18-2-A e-18-2-A
BE4049 e-10-2-B e-2-1-G

Turn Signal and Hazard Warning System

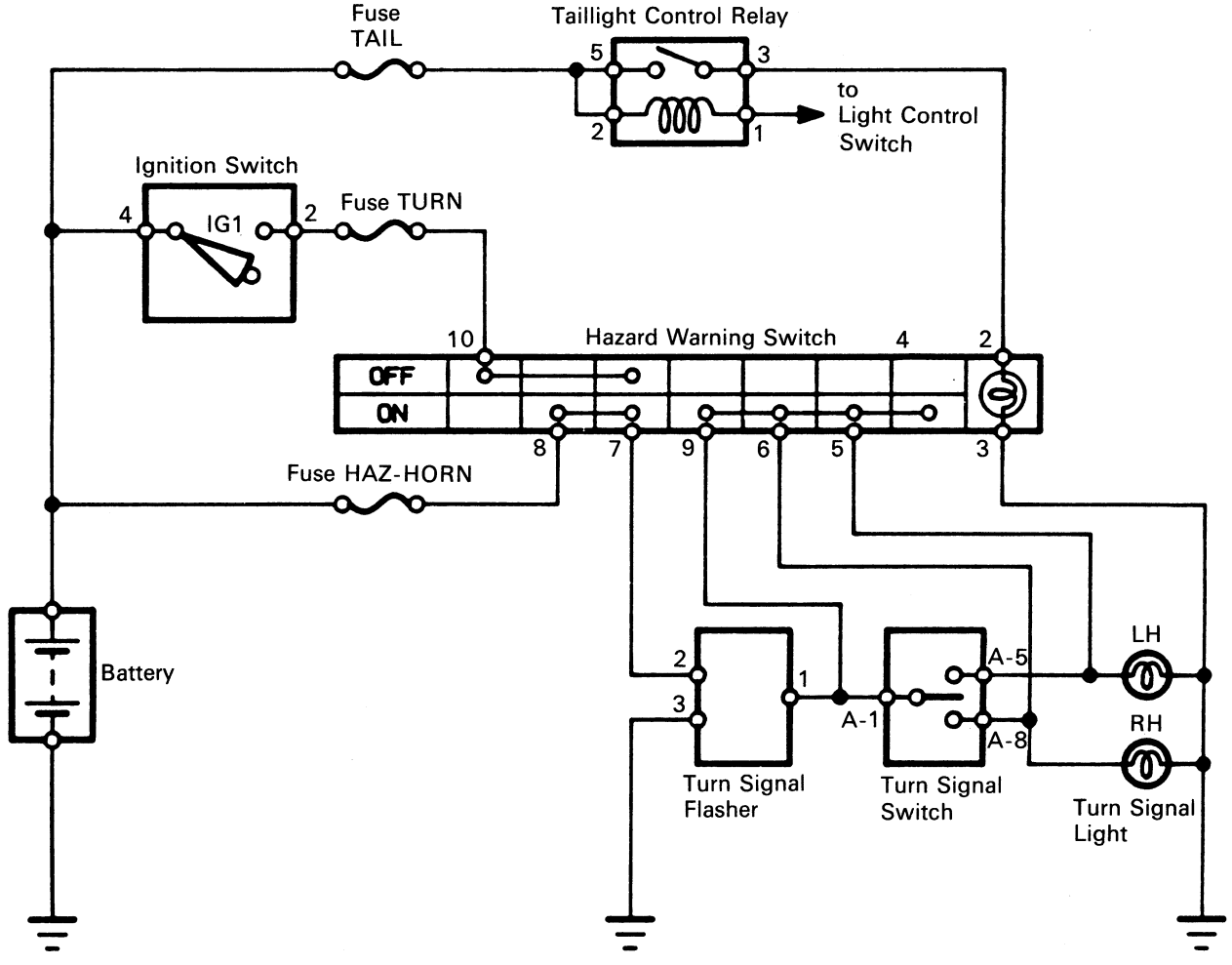

The POWER SOURCE CIRCUIT has been simplified. For full details, see page BE-9.

Ignition Switch

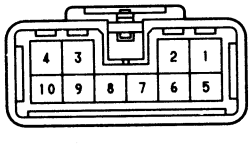

Taillight Control Relay

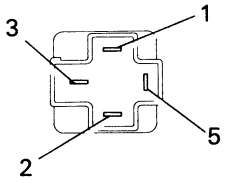

Hazard warning Switch

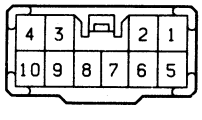

Turn Signal Flasher

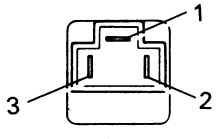

Turn Signal Switch

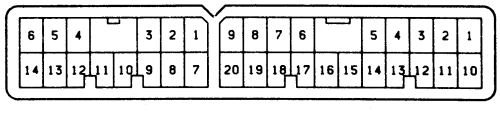

Connector "A" Connector "B"

BE5067
e-10-2-B BE4049 S-10-2
BE2896 V-34-2

Illuminated Entry System

w/o Door Key Cylinder Illumination Light

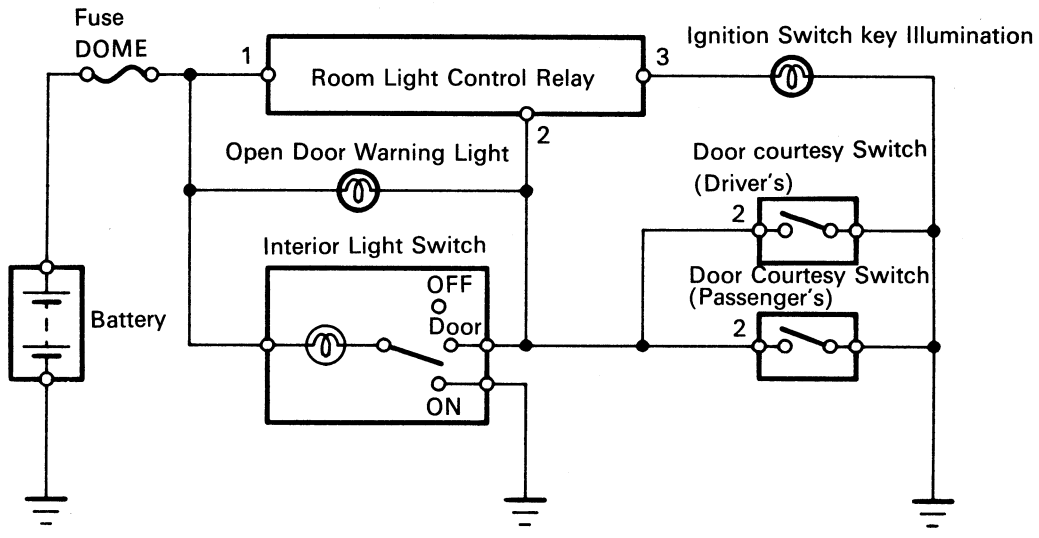

The POWER SOURCE CIRCUIT has been simplified. For full details, see page BE-9.

w/ Door Key Cylinder Illumination Light

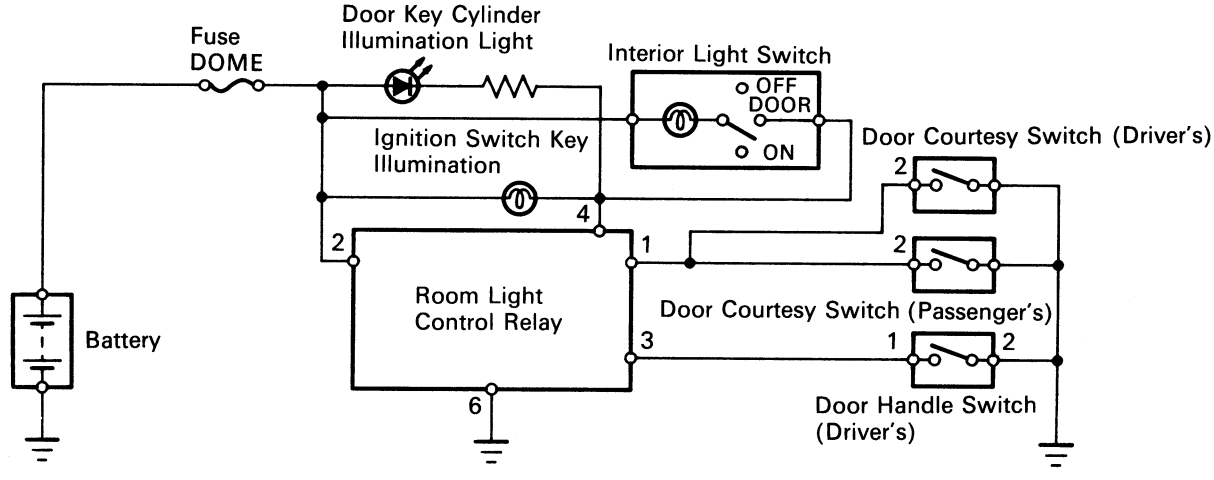

The POWER SOURCE CIRCUIT has been simplified. For full details, see page BE-9.

Room Light Control Relay

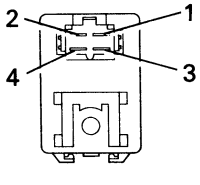

(w/o Door Key Cylinder Illumination Light)

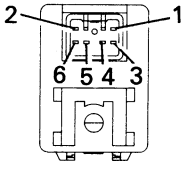

(w/ Door Key Cylinder Illumination Light)

Door Courtesy Switch

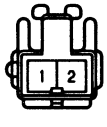

Door Handle Switch

BE4664
BE5055
BE4851 BE5056 e-2-1-G
1Y-2-1-A

System Discription

Light Retractable System (w/o Light Auto Turn Off System)

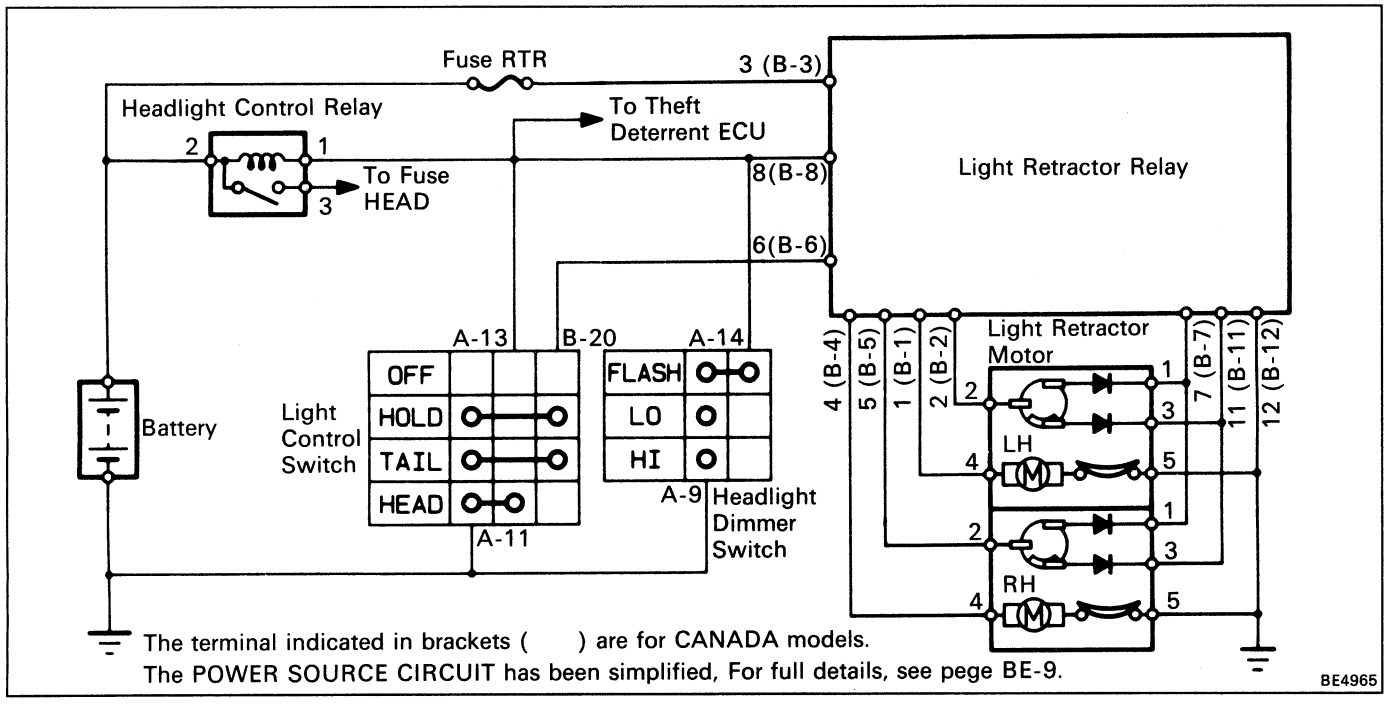

Current flows from the battery to terminals 3 (B-3) of the light retractor relay.

Operation examples of the switch are shown below;

HINT: The number in [ ] are for the left side headlight.

1. LIGHT CONTROL SWITCH IN "HEAD"

When the switch is set, continuity is produced between terminal 8 (B-8) of the light retractor relay (hereafter called LRR) and the body ground. Also continuity is made between terminals 7 (B-7) and 12 (B-12) of the LRR. Then the LRR operates so that current flows from terminal 3 (B-3) of the LRR → terminal 4 (B-4) [1 (B-1)] of the LRR → terminal 4 of the light retractor motor → terminal 5 of the motor → the body ground, and the motor starts to run in order to raise the headlights.

When the headlights rise, the limit switch operates, so that continuity is broken between terminals 2 and 1 of the motor, and continuity is produced between terminals 2 and 3.

As a result, because the LRR is interrupted, the headlights stay in position.

2. LIGHT CONTROL SWITCH CHANGED FROM "HEAD" TO "TAIL" OR "HOLD"

When the switch is set, continuity is broken between terminal 8 (B-8) of the LRR and the body ground, and continuity is produced between terminal 6 (B-6) of the LRR and the body ground.

As a result, the headlights are kept in position.

3. LIGHT CONTROL SWITCH CHANGED FROM "TAIL" OR "HOLD" TO "OFF"

When the switch is set, continuity is also broken between terminal 6 (B-6) and the body ground.

Then continuity is produced between terminals 11 (B-11) and 12 (B-12) of the LRR, so that the LRR operates so that current flows from terminal 3 (B-3) → terminal 4 (B-4) [1 (B-1)] of the LRR → terminal 4 of the light retractor motor → terminal 5 of the motor → the body ground, and the motor starts to run in order to retract the headlights.

When the headlights are retracted, the limit switch operates, so that continuity is broken between terminals 2 and 3 of the motor, and continuity is produced terminals 2 and 1.

As a result, because the LRR interrupted, the headlights stay in position.

(w/ Light Auto Turn Off System)

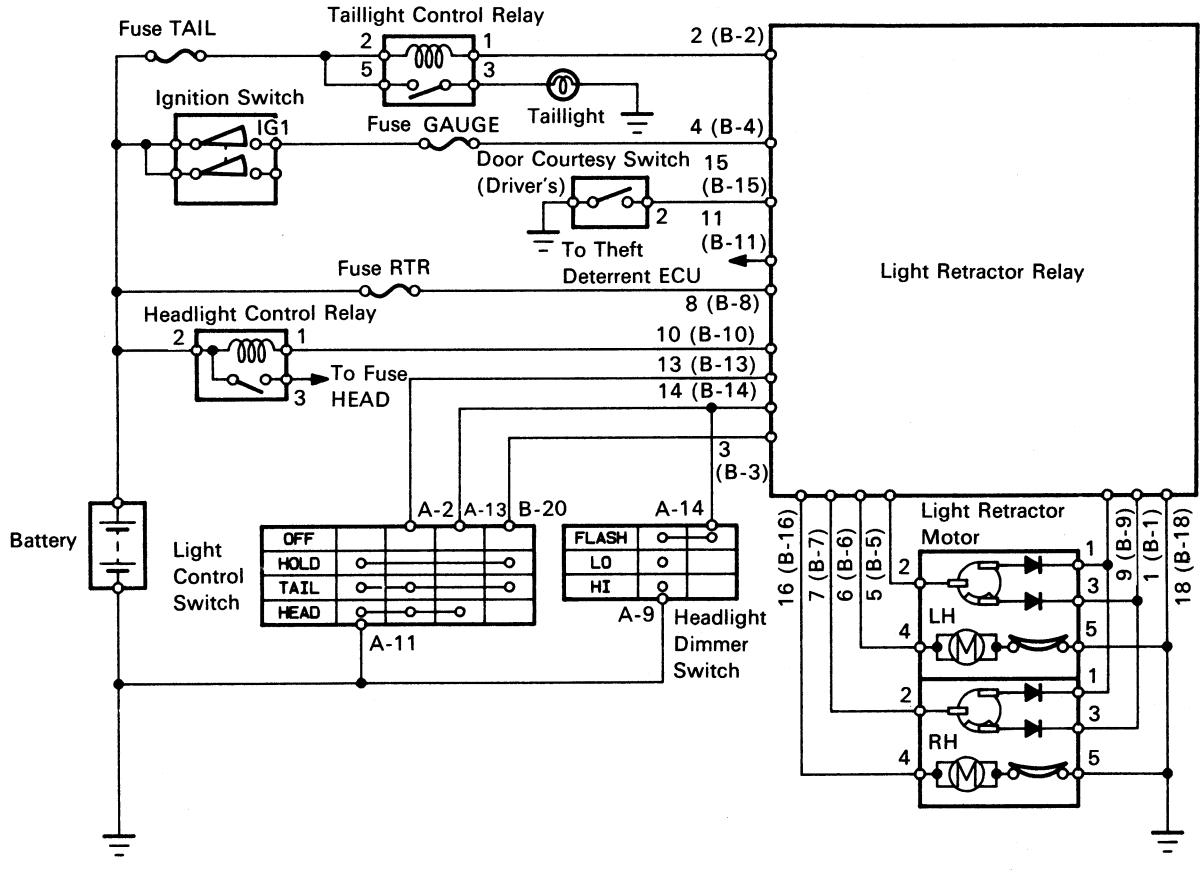

The terminals indicated in brackets ( ) are for CANADA models.
The POWER SOURCE CIRCUIT has been simplified. For full details, see page BE-9.

BE5234

- Current flows from the battery to terminal 8 (B-8) of the light retractor relay.
- Battery voltage is applied to terminal 5 (B-5) and 7 (B-7) of the light retractor relay.

Operation examples of the switch are shown below;

HINT: The numbers in [ ] are for the left side headlight.

1. LIGHT CONTROL SWITCH IN "TAIL"

When the switch is set continuity is produced between terminal 13 (B-13) of the light retractor relay (hereafter called LRR) and the body ground. Also, because continuity is produced between terminal 2 (B-2) of the LRR and the body ground, the taillight control relay (hereafter called TCR) is turned on. Then the taillights light up.

2. LIGHT CONTROL SWITCH IN "HEAD"

When the switch is set, continuity is produced between terminal 13 (B-13) of the LRR and the body ground, and 14 (B-14) of the LRR and the body ground of the LRR.

- Also continuity is produced between terminals 9 (B-9) and 18 (B-18) of the LRR. Then the LRR operates to lead current from terminal 8 → terminal 16 (B-16) [6 (B-6)] of the LRR → terminal 4 of the light retractor motor → terminal 5 of the motor → the body ground, and the motor starts, to run in order to raise the headlights.

When the headlights rise, the limit switch operates, so that continuity is broken between terminals 2 and 1 of the motor, and continuity is produced between terminals 2 and 3.

As a result, because the LRR is interrupted, the headlights stay in position.

- Also, because continuity is produced between terminal 2 (B-2) of the LRR and the body ground, and 10 (B-10) of the LRR and the body ground, the TCR and the headlight control relay (hereafter called HCR) are turned on.

  Then the taillights and the headlights light up.

3. LIGHT CONTROL SWITCH CHANGED FROM "HEAD" TO "TAIL"

When the switch is set continuity is broken between terminal 14 (B-14) of the LRR and the body ground, and continuity is produced between terminal 3 (B-3) of the LRR and body ground.

- As a result, the headlights are kept in position.
- By breaking continuity between terminal 14 (B-14) of the LRR and the body ground, continuity is broken between terminal 10 (B-10) and the body ground.

  Then the headlights go out.

4. LIGHT CONTROL SWITCH CHANGED FROM "TAIL" TO "HOLD"

When the switch is set, continuity is broken between terminal 13 (B-13) of the LRR and the body ground. Also, because continuity is broken between terminal 2 (B-2) of the LRR and the body ground, the TCR is turned off.

Then the taillights go out.

The headlights are kept in position, because continuity is kept between terminal 3 (B-3) of the LRR and the body ground.

5. LIGHT CONTROL SWITCH CHANGED FROM "HOLD" TO "OFF"

When the switch is set, continuity is broken between terminal 3 (B-3) of the LRR and the body ground, so that continuity is produced between terminal 1 (B-1) and 18 (B-18) of the LRR.

Then the LRR operates so that the current flows from terminal 8 (B-8) → terminal 16 (B-16) [6 (B-6)] of the LRR → terminal 4 of the light retractor motor → terminal 5 of the motor → the body ground, and the motor starts to run in order to retract the headlights.

When the headlights are retracted, the limit switch operates, so that continuity is broken between terminals 2 and 3 of the motor, and continuity is produced between terminals 2 and 1.

As a result, because the LRR is interrupted, the headlights stay in position.

6. IGNITION SWITCH TURNED FROM "ON" TO "ACC" OR "LOCK" AND DRIVER'S DOOR OPEN WITH LIGHT CONTROL SWITCH IN "HEAD" (Light Auto Turn Off system)

When the switches are set, current does not flow from the battery to terminal 4 (B-4) of the LRR, and continuity is produced between terminal 15 (B-15) of the LRR and the body ground. Also, because continuity is broken between terminals 2 (B-2) of the LRR and the body ground, and 10 (B-10) of the LRR and the body ground, the TCR and the HCR are turned off.

Then the taillights and the headlights go out.

Also with the light control switch in "TAIL", the taillights go out.

When the ignition switch is turned on again, the taillights and headlights light normally.

During light auto turn off operation, if the light switch is turned first to "HOLD" or "OFF", then turned to "TAIL" or "HEAD", both sets of lights will come on again.

Daytime Running Light System (CANADA)

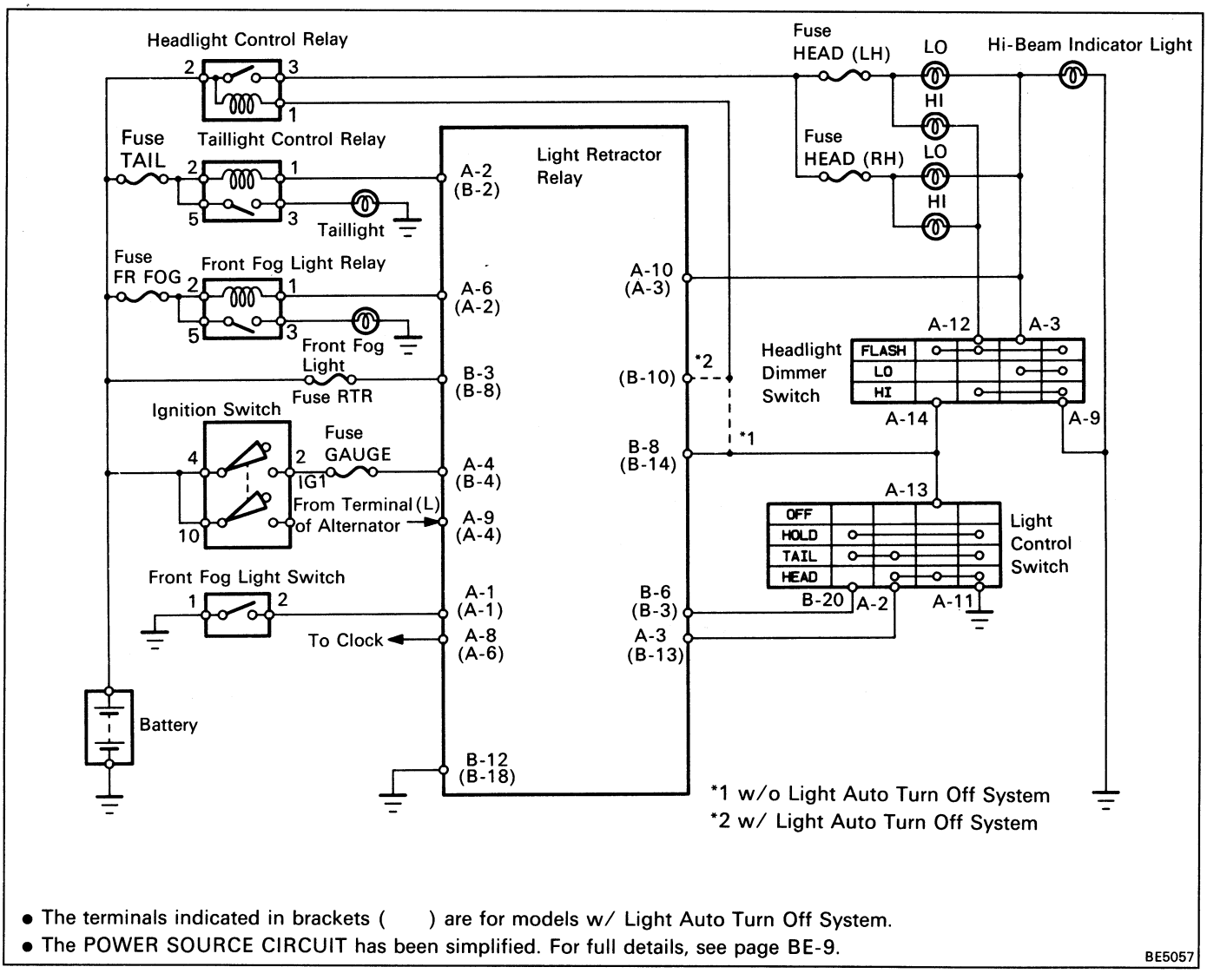

- The terminals indicated in brackets ( ) are for models w/ Light Auto Turn Off System.
- The POWER SOURCE CIRCUIT has been simplified. For full details, see page BE-9.

BE5057

DESCRIPTION

The daytime running light system has front fog lights and taillights that go on automatically when the engine is started. This system is standard equipment on all grade models for Canada. The daytime running lights are controlled by the light retractor relay.

Standby Operation

The daytime running light system is activated when the ignition switch is turned on and the engine is started. The lights are turned on and off, as shown below, depending on the condition on applicable switches. (Lights do not go on when the ignition switch is merely turned on. Lights remain on when the running engine stalls.)

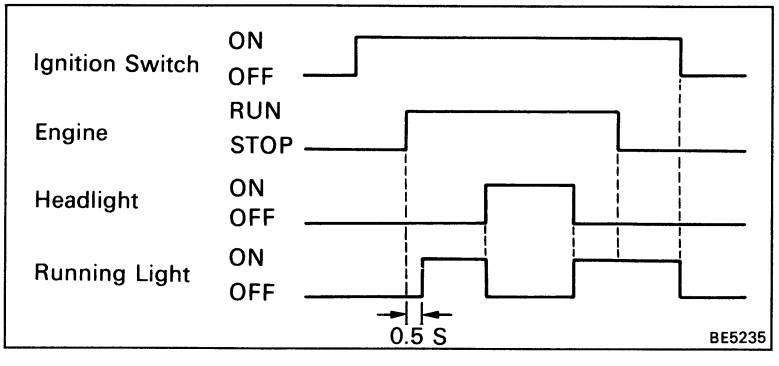

BE5235

OPERATION

Operation examples of the switch are shown below;

1. **IGNITION SWITCH "ON" AND LIGHT CONTROL SWITCH "OFF"**

   When the switches are set, current is led from the battery to terminal A-4 (B-4) and terminal A-9 (A-4) of the light retractor relay. After engine running, because continuity is made between terminal A-2 (B-2) of the light retractor relay and the body ground, and terminal A-6 (A-2) of the light retractor relay and the body ground of the light retractor relay, the taillight control relay and running light control relay are turned on, so the taillights and running lights will come on.

2. **LIGHT CONTROL SWITCH "HEAD"**

   When the switch is set, continuity is made between terminal B-8 (B-14) of the light retractor relay and the body ground. Also, because the continuity between terminal A-6 (A-2) and terminal B-12 (B-18) of the light retractor relay is cut off, so the running lights will go off.

   HINT: If the light control switch is turned to "TAIL" or "HOLD" or "OFF", because continuity is made between terminal A-6 (A-2) and the body ground of the light retractor relay, so the running lights will come on again.

3. **ENGINE STOPS (IGNITION SWITCH "ON")**

   When the engine is stopped, because the continuity between terminal A-6 (A-2) and terminal B-12 (B-18) of the light retractor relay remains, so the running lights also remain.

   HINT: If ignition switch is turned to "OFF", because the continuity between terminal A-6 (A-2) and terminal B-12 (B-18) of the light retractor relay is cut off, so running lights will go off.

   If light control switch is in "HOLD" or "OFF", because the continuity between terminal A-2 (B-2) and terminal B-12 (B-18) of the light retractor relay is also cut off, so taillights will also go off.

Part Adjustment

Adjustment of Light Aiming

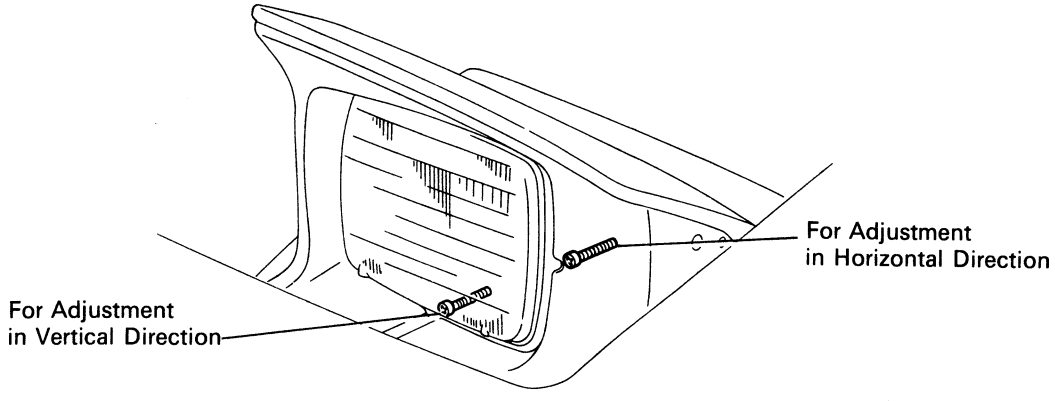

BE4708

Troubleshooting

Problem	Possible cause	Remedy	Page
Only one light comes ON	Light bulb burned out	Replace bulb	
	Socket, wire or ground faulty	Repair as necessary	
Headlights do not light	Fusible link blown	Replace fusible link	
	HEAD fuse blown	Replace fuse and check for short	BE-3
	Headlight control relay faulty	Check relay	BE-34
	Light control/dimmer switch faulty	Check switch	BE-34
	Light retractor relay faulty (w/ Light auto turn off system)	Check relay	BE-36, 39
	Wiring or ground faulty	Repair as necessary	
High beam headlights or headlight flashers do not operate	Light control/dimmer switch faulty	Check switch	BE-34
	Wiring faulty	Repair as necessary	
Tail, parking and license light do not Light	Fusible link blown	Replace fusible link	
	TAIL fuse blown	Replace fuse and check for short	BE-3
	Taillight control relay faulty	Check relay	BE-34
	Light control switch faulty	Check switch	BE-34
	Light retractor relay faulty (w/ Light auto turn off system or w/ Daytime running right system)	Check relay	BE-35, 36, 39
	Wiring or ground faulty	Repair as necessary	

Troubleshooting (Cont'd)

Problem	Possible cause	Remedy	Page
Stop light do not light	STOP fuse blown	Replace fuse and check for short	BE-3
	Stop light switch faulty	Adjust or replace switch	
	Wiring or ground faulty	Replace as necessary	
Stop lights stay on	Stop light switch faulty	Adjust or replace switch	
Turn signal does not flash on one side	Turn signal switch faulty	Check switch	BE-34
	Wiring or ground faulty	Repair as necessary	
Turn signals do not operate	TURN fuse blown	Replace fuse and check for short	BE-3
	Turn signal flasher faulty	Check flasher	BE-40
	Turn signal switch faulty	Check switch	BE-34
	Wiring or ground faulty	Repair as necessary	
Hazard warning lights do not operate	HAZ-HORN fuse blown	Replace fuse and check for short	BE-3
	Turn signal flasher faulty	Check flasher	BE-40
	Hazard warning switch faulty	Check switch	BE-40
	Wiring or ground faulty	Repair as necessary	
Light retractable system does not operate	RTR fuse blown	Replace fuse and check for short	BE-3
	Headlight control relay faulty	Check relay	BE-34
	Light retractor relay faulty	Check relay	BE-38,39
	Light retractor motor faulty	Check motor	BE-39
	Light control/dimmer switch faulty	Check switch	BE-34
	Wiring or ground faulty	Repair as necessary	
Daytime running light system does not operate	GAUGE fuse blown	Replace blown fuse and check for short	BE-3
	RTR fuse blown		
	FR FOG fuse blown		
	ECU-B fuse blown		
	TAIL fuse blown		
	HEAD fuse blown		
	Front fog light relay faulty	Check relay	BE-37
	Taillight control relay faulty	Check relay	BE-34
	Headlight control relay faulty	Check relay	BE-34
	Light retractor relay faulty	Check relay	BE-38,39
	Ignition switch faulty	Check switch	BE-11
	Front fog light switch faulty	Check switch	BE-37
	Light control/dimmer switch faulty	Check switch	BE-34
	Wiring or ground faulty	Repair as necessary	

Troubleshooting (Cont'd)

Problem	Possible cause	Remedy	Page
Front fog light system does not operate	FR FOG fuse blown	Replace blown fuse and check for short.	BE-3
	HEAD fuse blown (w/o Daytime running light system)	Replace blown fuse and check for short	BE-3
	Front fog light relay faulty	Check relay	BE-37
	Headlight control relay faulty (w/o Daytime running light system)	Check relay	BE-34
	Light retractor relay faulty (w/ Daytime running light system or w/ Light auto turn off system)	Check relay	BE-35, 36, 39
	Front fog light switch faulty	Check switch	BE-37
	Wiring or ground faulty	Repair as necessary	
Illuminated entry system does not operate	DOME fuse blown	Replace fuse and check for short.	BE-3
	Room light control relay faulty	Check relay	
	Door courtesy switch faulty	Check switch	
	Door handle switch faulty (w/ Door key cylinder illumination light)	Check switch	
	Wiring or ground faulty	Repair as necessary	

Parts Replacement

Components

(A Type)

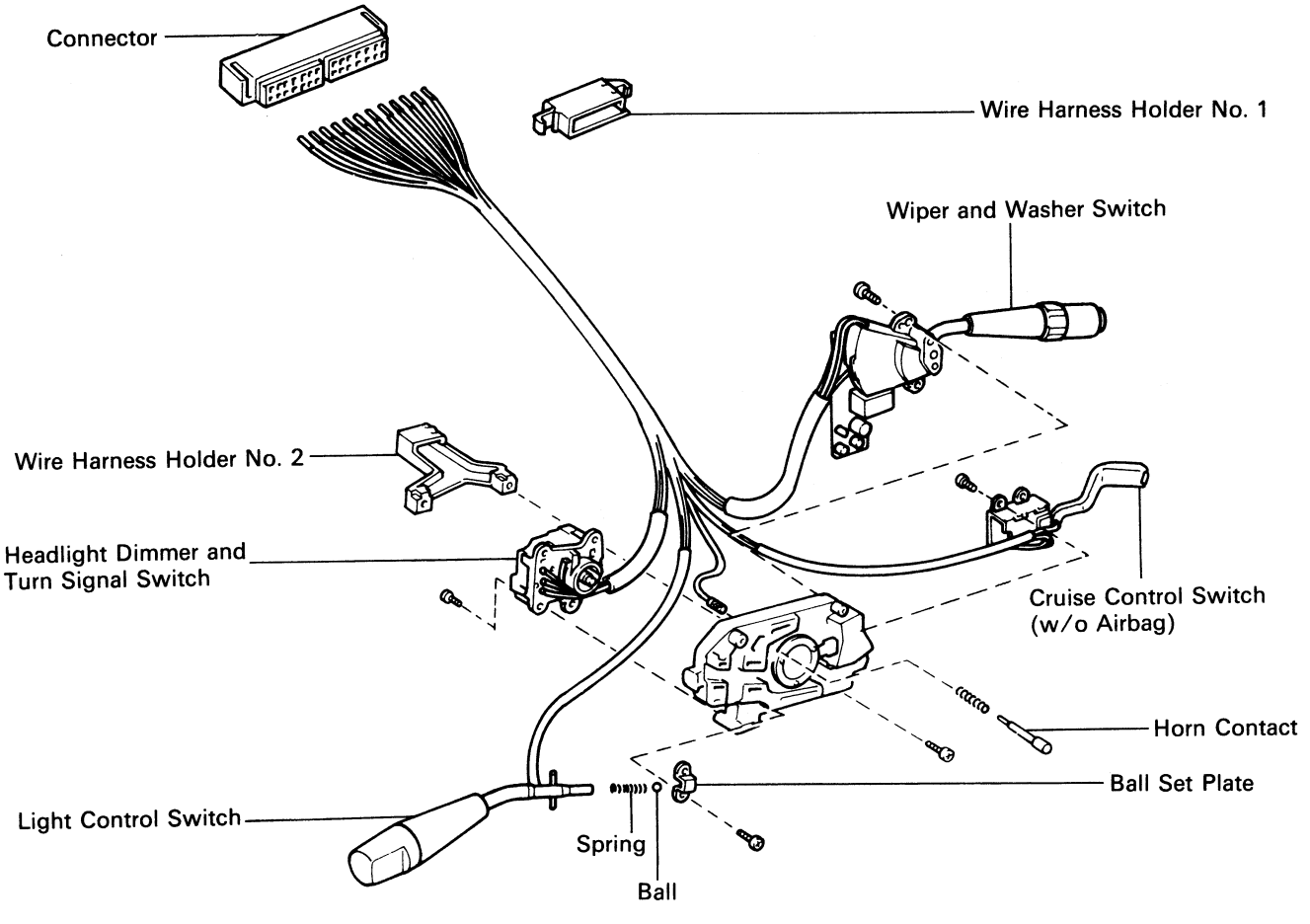

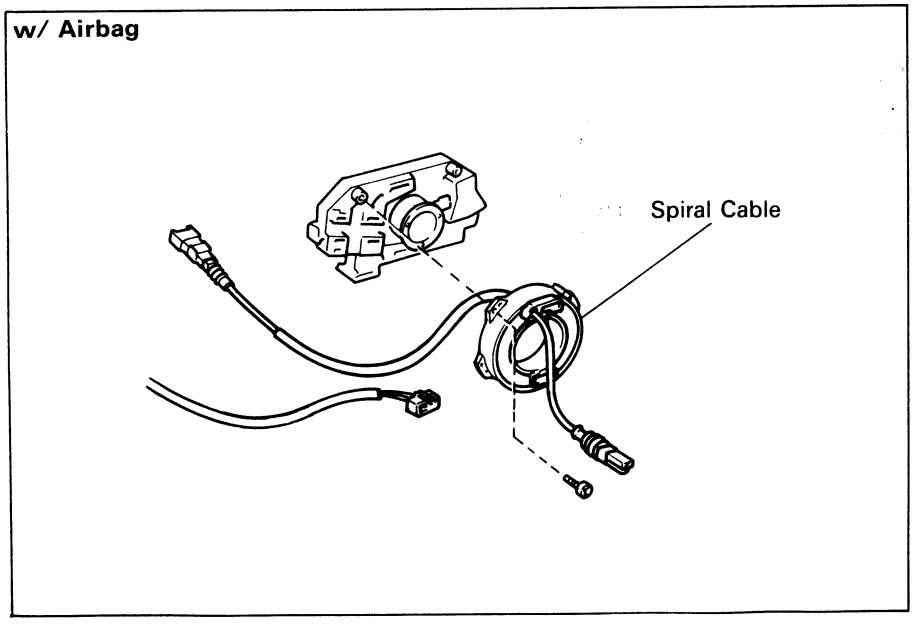

BE4886
BE4966

(B Type)

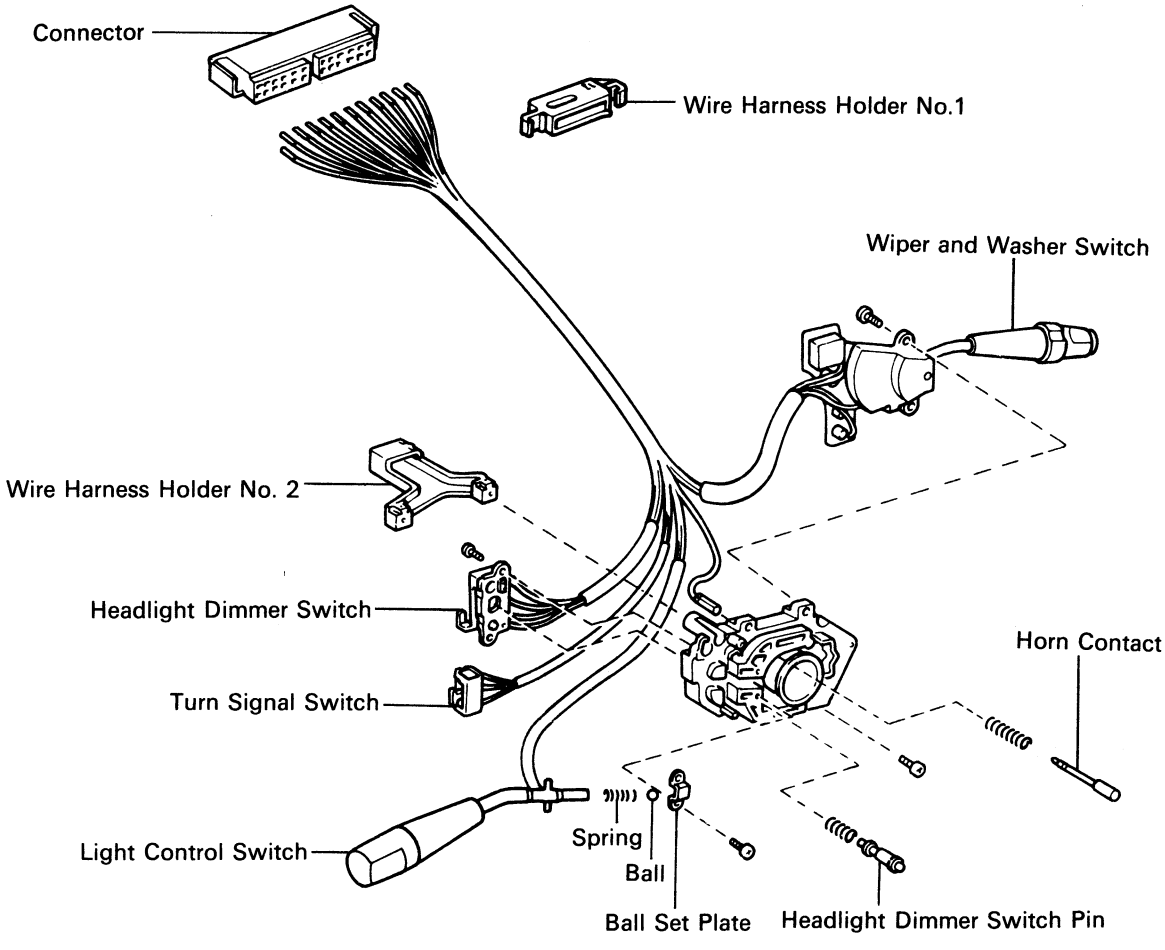

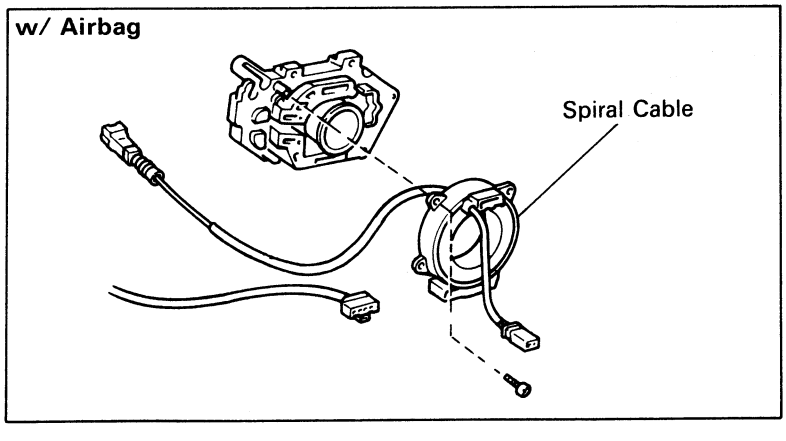

BE4372
BE4967

Disassembly of Combination Switch

1. **REMOVE WIRE HARNESS HOLDER NO. 1**

2. **REMOVE WIRE HARNESS HOLDER NO. 2**

3. **(w/Airbag)**
   REMOVE SPIRAL CABLE SUBASSEMBLY
   (a) Remove the four screws.
   (b) Disconnect the connector and remove the spiral cable subassembly.

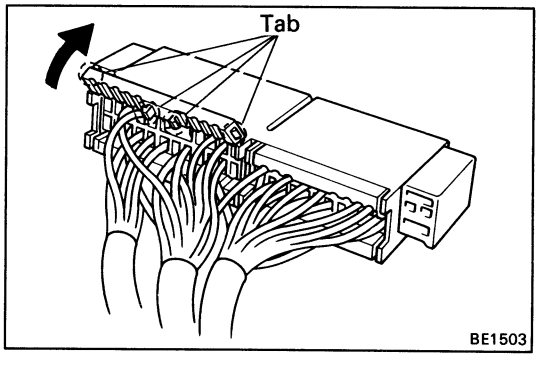

4. **REMOVE TERMINALS FROM CONNECTOR**
   (a) Release four tabs and open the terminal cover.

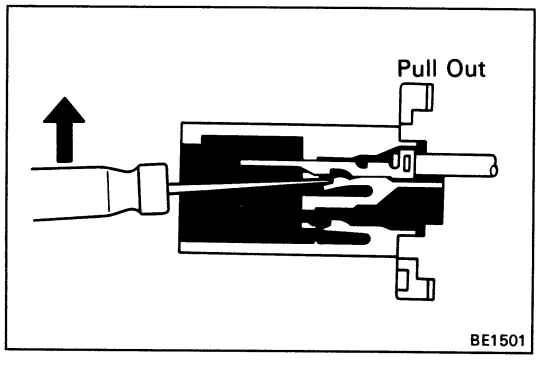

   (b) From the open end, insert a miniature screwdriver between the locking lug and terminal.
   (c) Pry down the locking lug with the screwdriver and pull the terminal out from the rear.

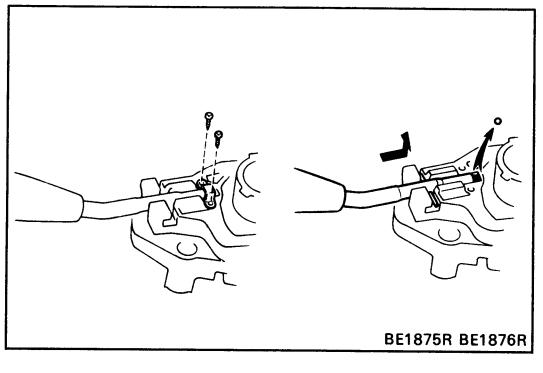

5. **REMOVE LIGHT CONTROL SWITCH**
   (a) Remove two screws and the ball set plate from the switch body.
   (b) Remove the ball and side out the switch from the switch body with the spring.

6. **REMOVE HEADLIGHT DIMMER AND TURN SIGNAL SWITCH**
(A Type)

Remove four screws and the switch from the switch body.

(B Type)

(a) Pry loose two locking lugs and remove the turn signal switch from the switch body.

(b) Remove two screws and the headlight dimmer switch from the switch body.

(c) Remove the headlight dimmer switch pin from the switch body with the spring.

7. **REMOVE WIPER AND WASHER SWITCH**

Remove two screws and the switch from the switch body.

8. **(A Type)**
REMOVE CRUISE CONTROL SWITCH

Remove two screws and the switch from the body.

9. **REMOVE HORN CONTACT**

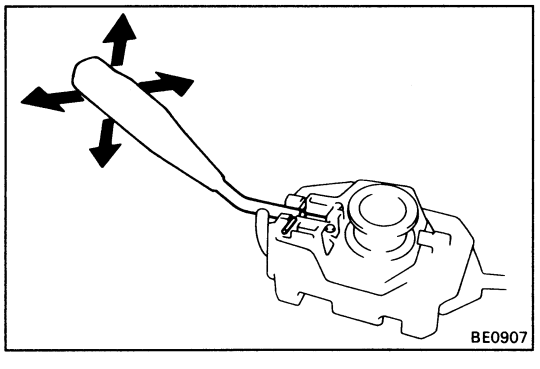
BE0907

Assembly of Combination Switch

INSTALL PARTS OF COMBINATION SWITCH IN REVERSE SEQUENCE OF DISASSEMBLY

HINT:

- After installing the light control switch to the switch body, insure that the switch operation is smoothly.

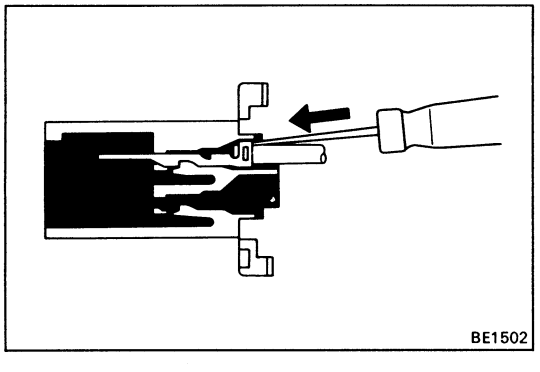
BE1502

- Push in the terminal until it is securely locked in the connector lug.

Reference:

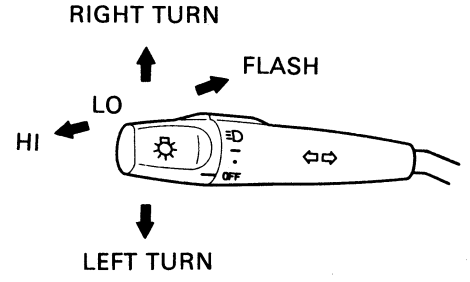

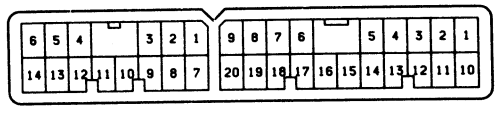

Connector "A" Connector "B"

BE4888
V-34-2

Parts Inspection

Headlight and Taillight System

1. INSPECT COMBINATION SWITCH (Light Control Switch/Continuity)

Terminal (Color) / Switch position	A-2 (Clear)	A-11 (W)	A-13 (R)	B-20 (G)
OFF				
HOLD (●)		○		○
TAIL (–)	○	○		○
HEAD (≡D)	○	○	○	

(Headlight Dimmer and Turn Signal Switch/ Continuity)

Headlight Dimmer Switch

Terminal (Color) / Switch position	A-3 (R-G)	A-9 (W-B)	A-12 (R-Y)	A-14 (R-W)
Flash		○	○	○
Low beam	○	○		
High beam		○	○	

Turn Signal Switch

Terminal (Color) / Switch position	A-1 (G-W)	A-5 (G-B)	A-8 (G-Y)
Left turn	○	○	
Neutral			
Right turn	○		○

If continuity is not as specified, replace the switch.

2. INSPECT RELAYS (Headlight Control Relay/Continuity)

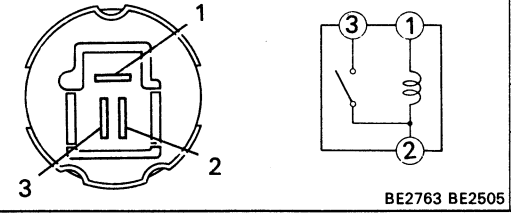

BE2763 BE2505

Terminal / Condition	1	2	3
Constant	○	○	
Apply battery voltage to terminals 1 and 2.		○	○

(Taillight Control Relay/Continuity)

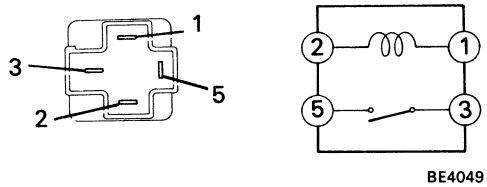

BE4049 BE1840

Terminal / Condition	1	2	3	5
Constant	○	○		
Apply battery voltage to terminals 1 and 2.			○	○

Daytime Running Light System (w/o Light Auto Turn Off System)

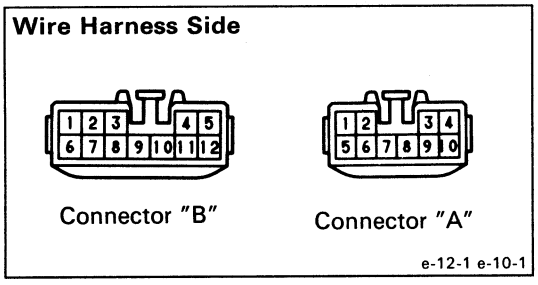

INSPECT LIGHT RETRACTOR RELAY (Relay Circuit)

Disconnect the connector from the relay and inspect the connector on the wire harness side as shown in the chart.

Check for	Tester connection	Condition		Specified value
Continuity	A-1 – Ground	Front fog light switch position	OFF	No continuity
			ON	Continuity
	A-3 – Ground	Light control switch position	OFF or HOLD	No continuity
			TAIL or HEAD	Continuity
	A-10 – Ground	Constant		Continuity
	B-6 – Ground	Light control switch position	OFF or HEAD	No continuity
			HOLD or TAIL	Continuity
	B-12 – Ground	Constant		Continuity
Voltage	A-2 – Ground	Constant		Battery voltage
	A-4 – Ground	Ignition switch position	LOCK or ACC	No voltage
			ON	Battery voltage
	A-6 – Ground	Constant		Battery voltage
	A-9 – Ground	Engine	Stop	No voltage
			Running	Battery voltage
	B-3 – Ground	Constant		Battery voltage
	B-8 – Ground	Light control switch position: OFF, HOLD or TAIL		
		Headlight dimmer switch position	Low beam or High beam	Battery voltage
			Flash	No voltage
		Light control switch position: HEAD		No voltage

If circuit is as specified, inspect relay operation.

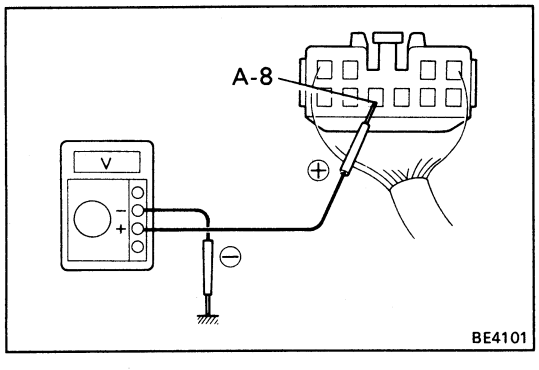

(Relay Operation)

(a) Connect the positive (+) lead from the voltmeter to terminal A-8 and negative (–) lead to the ground.

(b) Check that there is battery voltage with light control switch is turned on.

If operation is not as specified, replace the relay.

(w/ Light Auto Turn Off System)

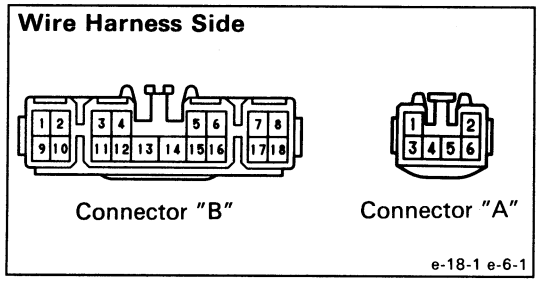

INSPECT LIGHT RETRACTOR RELAY (Relay Circuit)

Disconnect the connector from the relay and inspect the connector on the wire harness side as shown in the chart.

Check for	Tester Connection	Condition		Specified value
Continuity	A-1 – Ground	Front fog light Switch position	OFF	No continuity
			ON	Continuity
	B-3 – Ground	Light control switch position	OFF or HEAD	No continuity
			HOLD or TAIL	Continuity
	B-13 – Ground	Light Control switch position	OFF or HOLD	No continuity
			TAIL or HEAD	Continuity
	B-14 – Ground	Light control switch position: OFF, HOLD or TAIL		
		Headlight dimmer switch position	Low beam or High beam	No continuity
			Flash	Continuity
		Light control switch position: HEAD		Continuity
	B-18 – Ground	Constant		Continuity
Voltage	A-2 – Ground	Constant		Battery voltage
	A-3 – Ground	Light control switch HEAD and Dimmer switch LO		No voltage
		Light control switch HEAD and Dimmer switch HI		Battery voltage
	A-4 – Ground	Engine	Stop	No voltage
			Running	Battery voltage
	B-2 – Ground	Constant		Battery voltage
	B-4 – Ground	Ignition switch position	LOCK or ACC	No voltage
			ON	Battery voltage
	B-8 – Ground	Constant		Battery voltage
	B-10 – Ground	Constant		Battery voltage

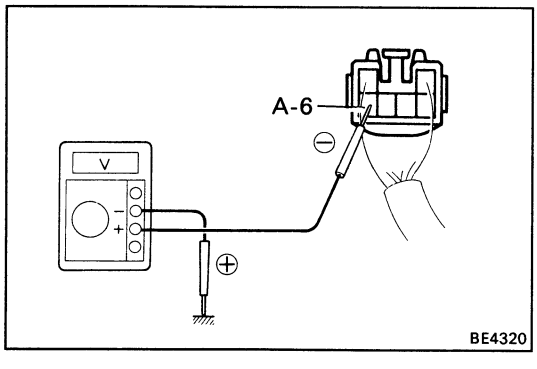

If circuit is specified, inspect relay operation.

(Relay Operation)

(a) Connect the positive (+) lead from the voltmeter to terminal A-6 and negative (–) lead to the ground.

(b) Check that there is battery voltage with light control switch is turned on.

If operation is not as specified, replace the relay.

Front Fog Light System

1. INSPECT FRONT FOG LIGHT SWITCH (Continuity)

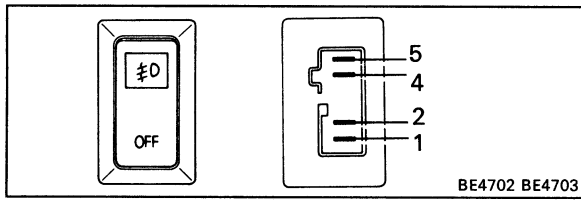

Terminal / Switch position	1	2	Illumination 4	Illumination 5
OFF				
ON	○	○	○	○

If continuity is not as specified, replace the switch.

2. INSPECT FRONT FOG LIGHT RELAY (Continuity)

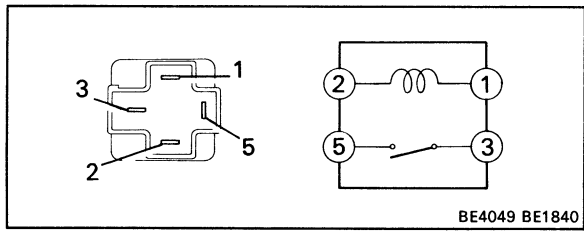

Terminal / Condition	1	2	3	5
Constant	○	○		
Apply battery voltage to terminals 1 and 2.			○	○

If continuity is not as specified, replace the relay.

Light Retractable System

1. INSPCT LIGHT RETRACTOR RELAY

Disconnect the connector from the relay and inspect the connector on wire harness side as shown in the chart.

Wire Harness Side

(w/o Light Auto Turn Off System)

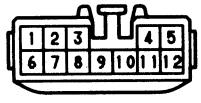

(USA)

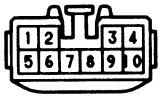

Connector "A"

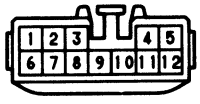

Connector "B"

(CANADA)

(w/ Light Auto Turn Off System)

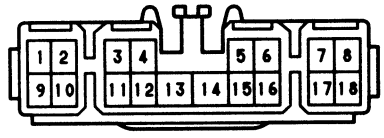

(USA)

Connector "A"

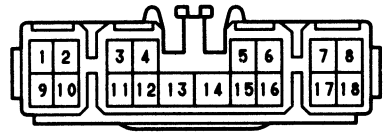

Connector "B"

(CANADA)

e-12-1 e-18-1
e-10-1 e-12-1 e-6-1 e-18-1

(w/o Light Turn Off System)

Check for	Tester connection	Condition		Specified value
Continuity	1(B-1) – Ground 4(B-4) – Ground	Constant		*1 Continuity
	*2 2(B-2) – 7(B-7)	Headlight position	Any position ex. uppermost	Continuity
	*2 5(B-5) – 7(B-7)		Uppermost	No continuity
	*2 2(B-2) – 11(B-11)	Headlight position	Any position ex. lowermost	Continuity
	*2 5(B-5) – 11(B-11)		Lowermost	No continuity
	6(B-6) – Ground	Light control switch position	OFF or HEAD	No continuity
			HOLD or TAIL	Continuity
	12(B-12) – Ground	Constant		Continuity
Voltage	3(B-3) – Ground	Constant		Battery voltage
	8(B-8) – Ground	Light control switch position: OFF, HOLD or TAIL		
		Headlight dimmer switch position	Low beam or High beam	Battery voltage
			Flash	No voltage
		Light control switch position: HEAD		No voltage

The number in ( ) mean for CANADA vehicle.
*1: There is resistance because this circuit is grounded through the motor.
*2: Connect the test leads so that the current from the ohmmeter can flow according to the above orders.

If circuit is as specified, replace the relay.

(w/ Light Auto Turn Off System)

Check for	Tester connection	Condition		Specified value
Continuity	3(B-3) – Ground	Light control switch position	OFF or HEAD	No continuity
			HOLD or TAIL	Continuity
	6(B-6) – Ground 16(B-16) – Ground	Constant		*1 Continuity
	13(B-13) – Ground	Light control switch position	OFF or HOLD	No continuity
			TAIL or HEAD	Continuity
	14(B-14) – Ground	Light control switch position: OFF, HOLD or TAIL		
		Headlight dimmer switch position	Low beam or Hight beam	No continuity
			Flash	Continuity
		Light control switch position: HEAD		Continuity
	18(B-18) – Ground	Constant		Continuity
	*2 5(B-5) – 1(B-1)	Headlight position	Any position ex. lowermost	Continuity
	*2 7(B-7) – 1(B-1)		Lowermost	No continuity
	*2 5(B-5) – 9(B-9)	Headlight position	Any position ex. uppermost	Continuity
	7(B-7) – 9(B-9)		Uppermost	No continuity
Voltage	2(B-2) – Ground	Constant		Battery voltage
	4(B-4) – Ground	Ignition switch position	LOCK or ACC	No Voltage
			ON	Battery voltage
	8(B-8) – Ground	Constant		Battery voltage
	10(B-10) – Ground	Constant		Battery voltage
	15(B-15) – Ground	Door position	Closed (Courtesy switch OFF)	Battery voltage
			Opened (Courtesy switch ON)	No voltage

The number in ( ) mean for CANADA vehicles.
*1: There is resistance because this circuit is grounded through the motor.
*2: Connect the test leads so that the current from the ohmmeter can flow according to the above orders.

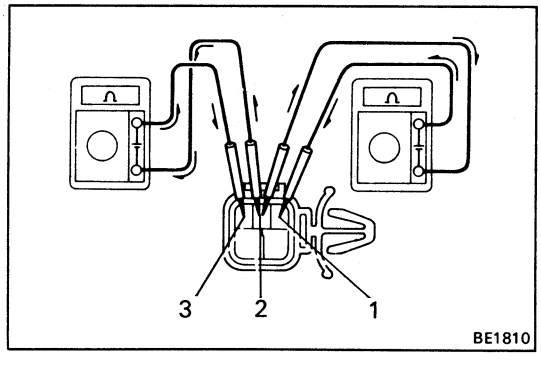

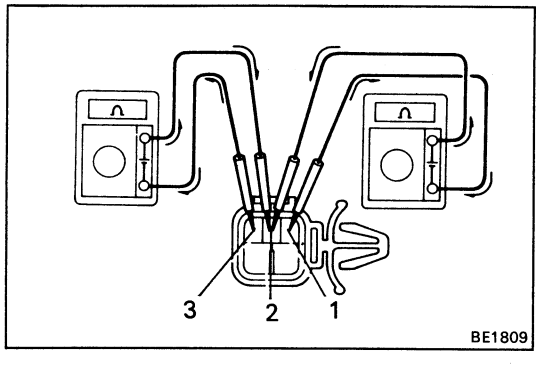

If circuit is as specified, replace the relay.

2. INSPECT LIGHT RETRACTOR MOTOR (Diode/Continuity)

(a) Set the motor to any position except the uppermost or lowermost position.

(b) Connect the ohmmeter test lead so that the current from the meter can flow from terminal 1 to 2, check that there is no continuity.

(c) Connect the ohmmeter test lead so that the current from the meter can flow from terminal 3 to 2, check that there is no continuity.

(d) Reverse the test leads of ohmmeter, check that there is continuity.

If continuity is not as specified, replace the motor.

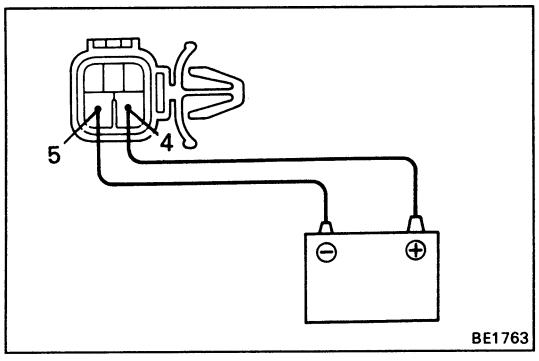

(Operation)

Connect the positive (+) lead from the battery to terminal 4 and the negative (–) lead to terminal 5, check that the motor operates.

If operation is not as specified, replace the motor.

Turn Signal and Hazard Warning System

1. INSPECT SWITCHES
(Turn Signal Switch/Continuity)

See Headlight Dimmer and Turn Signal Switch on page BE-34.

(Hazard Warning Switch/Continuity)

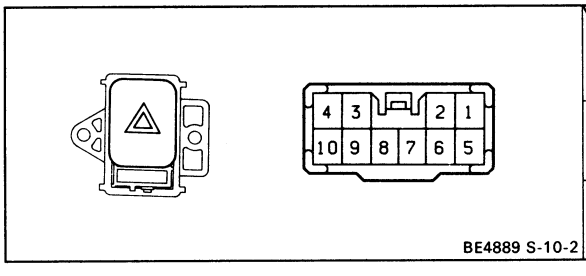

Terminal / Switch position	4	5	6	7	8	9	10	Illumination 2	Illumination 3
OFF				○	—	—	○	○	○
ON	○	○	○	○	○	○			

If continuity is not as specified, replace the switch.

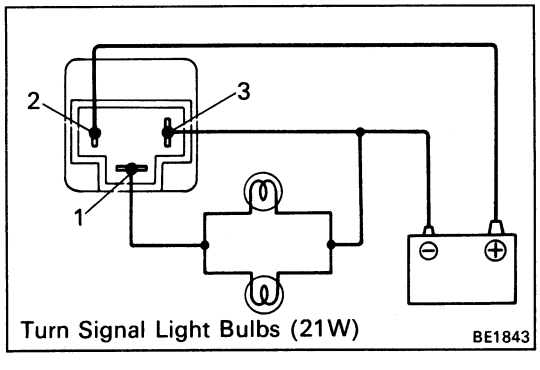

2. INSPECT TURN SIGNAL FLASHER
(Operation)

(a) Connect the positive (+) lead from the battery to terminal 2 and the negative (–) lead to terminal 3.

(b) Connect the two turn signal light bulbs parallel to each other to terminals 1 and 3, check that the bulbs flash.

HINT: The turn signal lights should flash 60 to 120 times per minute.

If one of the front or rear turn signal lights has an open circuit, the flash rate will be more than 140 times per minute.

If operation is not as specified, replace the flasher.

Illuminated Entry System

1. INSPECT DOOR COURTESY SWITCH

(Continuity)

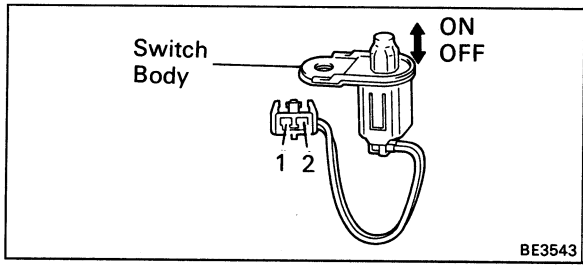

Terminal / Switch position	1	2	Switch body
ON (Switch pin released)	○	○	○
		○	○
OFF (Switch pin pushed in)			

If continuity is not as specified, replace the switch.

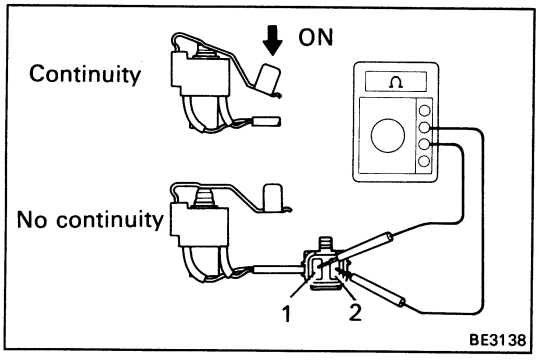

2. INSPECT DOOR OUTSIDE HANDLE SWITCH

(Continuity)

(a) Check that there is continuity between terminals 1 and 2 when door outside handle is pulled.

(b) Check that there is no continuity between terminals 1 and 2 when door outside handle is released.

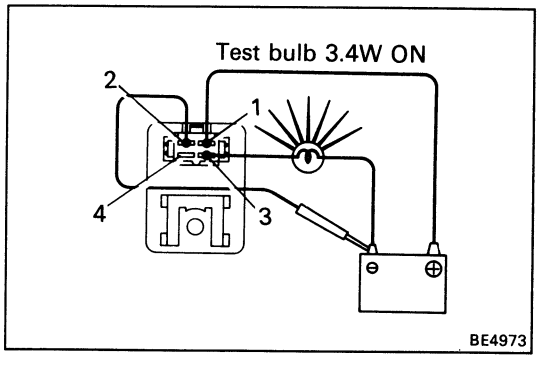

3. (w/o Door Key Cylinder Illumination Light) INSPECT ROOM LIGHT CONTROL RELAY

(Operation)

Connect the positive (+) lead from the battery to terminal 1. Connect the negative (–) lead to terminal 2. Connect a 3.4 W test bulb between terminal 3 and the negative (–) lead.

(a) Check that the bulb lights.

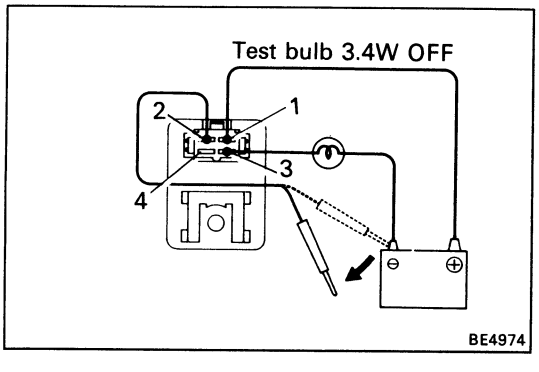

(b) Disconnect the negative (–) lead from the battery and check that the bulb goes out 5 seconds later.

If operation is not as specified, replace the relay.

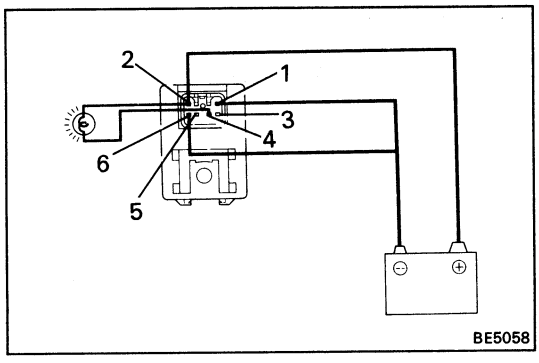

4. **(w/ Door Key Cylinder Illumination Light)**
INSPECT ROOM LIGHT CONTROL RELAY

(Courtesy switch circuit/Operation)

Connect the positive (+) lead from the battery to terminal 2. Connect the negative (–) lead to terminals 1 and 6. Connect a 3.4W test bulb between terminals 2 and 4.

(a) Check that the bulb lights.

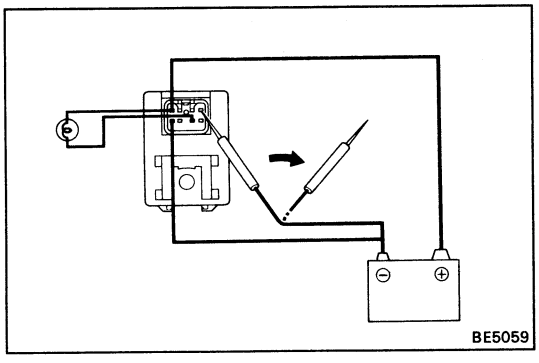

(b) Disconnect the negative (–) lead from terminal 1, and check that the bulb fades out about 8.5 seconds later.

If operation is not as specified, replace the relay.

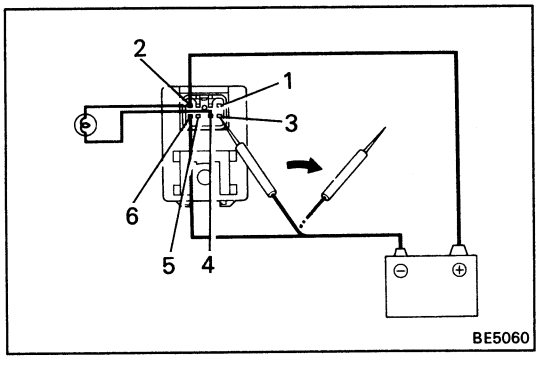

(Outside handle switch circuit/Operation)

Connect the positive (+) lead from battery to terminal 2. Connect the negative (–) lead to terminals 3 and 6. Connect a 3.4W test bulb between terminals 2 and 4. Disconnect the negative (–) lead from terminal 3, and check that the bulb fades out about 8.5 seconds later.

If operation is not as specified, replace the relay.

WIPER AND WASHER SYSTEM

Parts Location

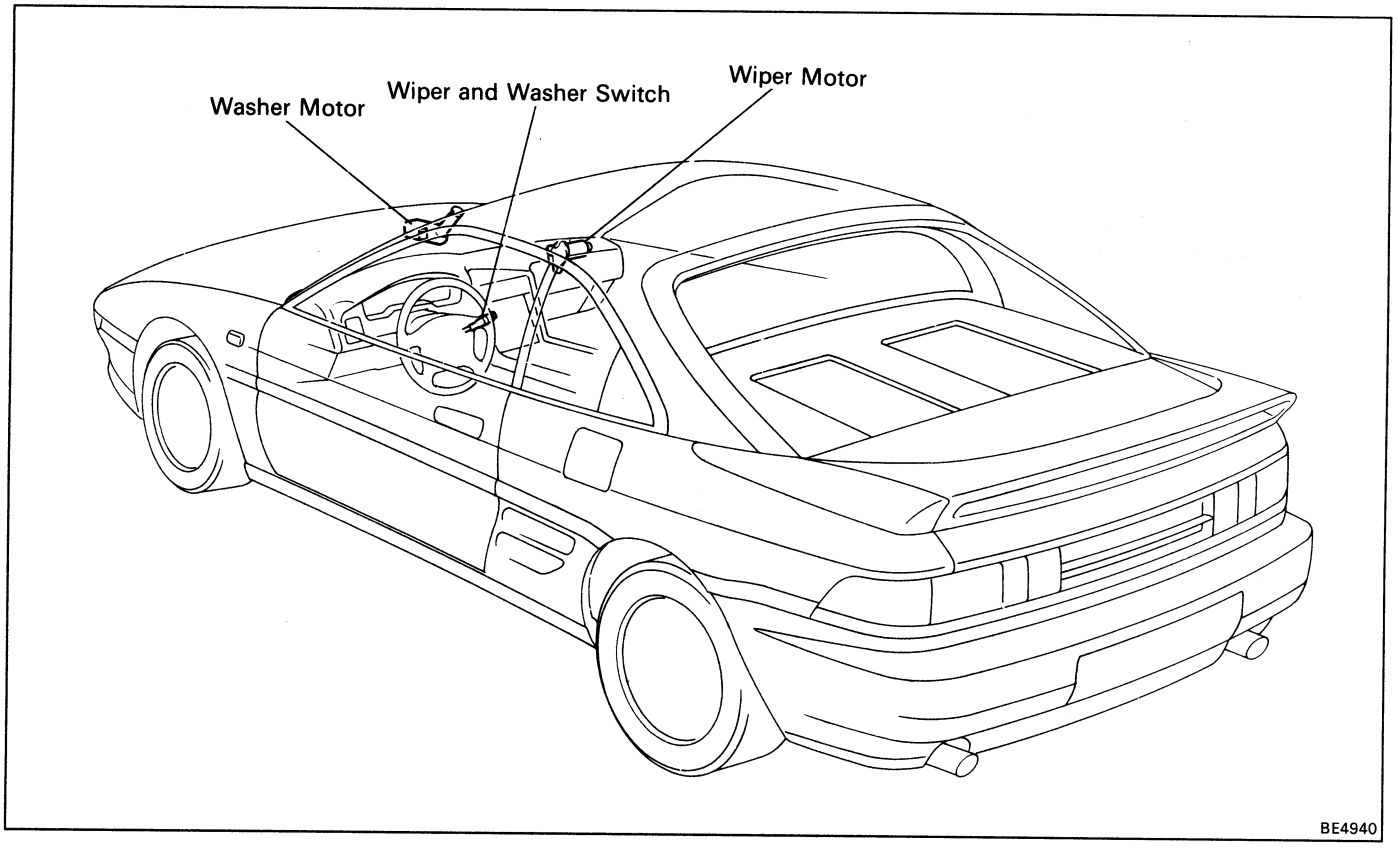

Wiring Diagram

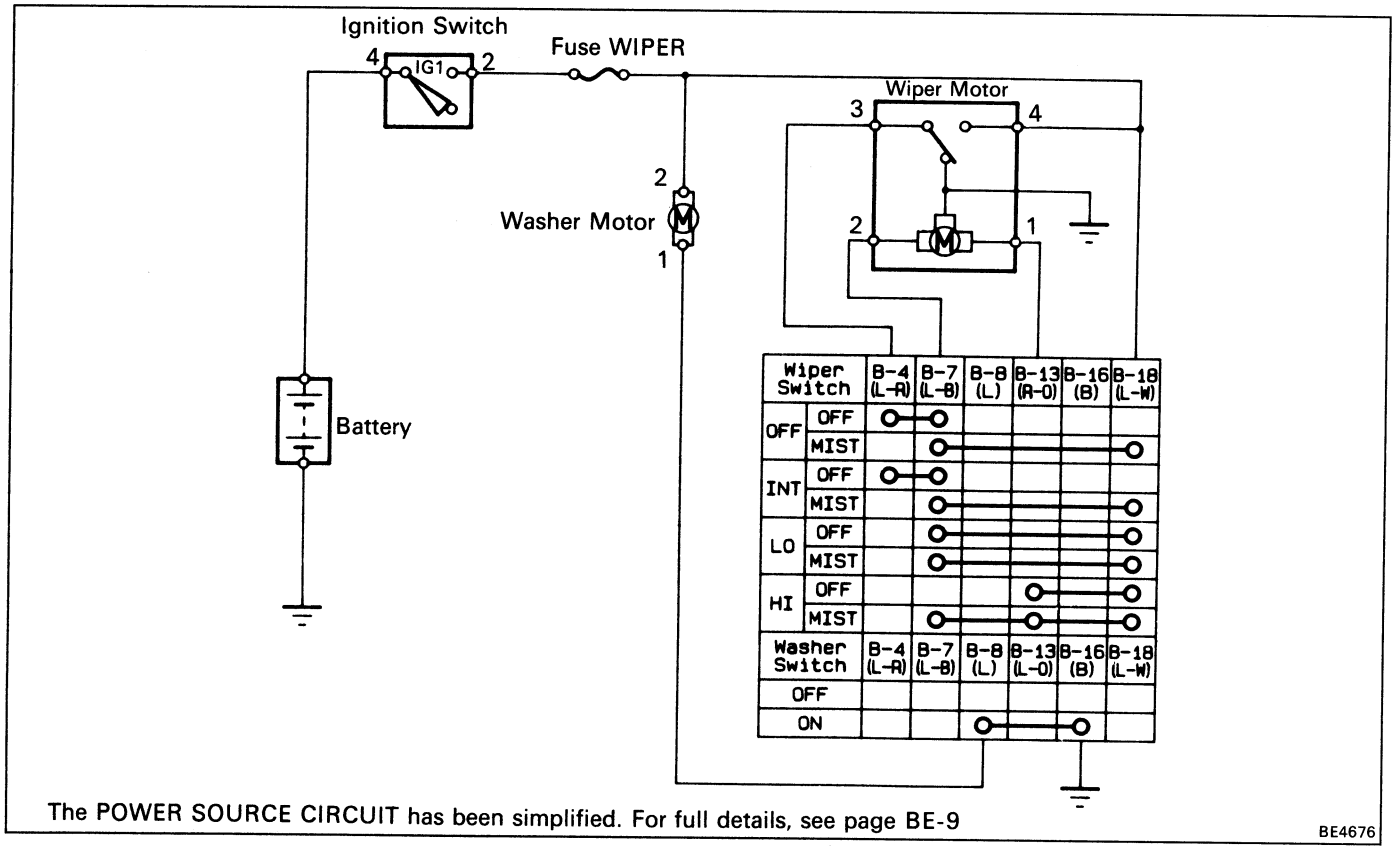

The POWER SOURCE CIRCUIT has been simplified. For full details, see page BE-9

Connector Diagrams

Ignition Switch

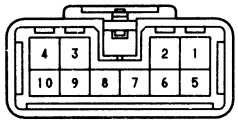

Wiper Motor

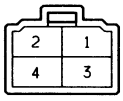

Wiper and Washer Switch

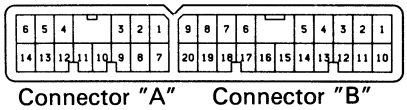

Connector "A" Connector "B"

Washer Motor

(All vehicles for CANADA, USA vehicles w/ Cold Area Spec.)

(USA vehicles w/o Cold Area Spec.)

e-10-2-B H-4-2 V-34-2
BE4107 IS-2-2-E

Troubleshooting

Problem	Possible cause	Remedy	Page
Wipers do not operate or return to off position	WIPER fuse blown Wiper motor faulty Wiper switch faulty Wiper or ground faulty	Replace fuse and check for short Check motor Check switch Repair as necessary	BE-3 BE-46 BE-45
Wiper do not operate in INT position	Wiper switch faulty Wiper motor faulty Wiring or ground faulty	Check switch Check motor Repair as necessary	BE-45 BE-46
Washers do not operate	Washer hose or nozzle clogged Washer motor faulty Wiper switch faulty Wiring faulty	Repair as necessary Replace motor Check switch Repair as necessary	 BE-47 BE-45

Parts Replacement

See Parts Replacement of Combination Switch on page BE-30.

Reference:

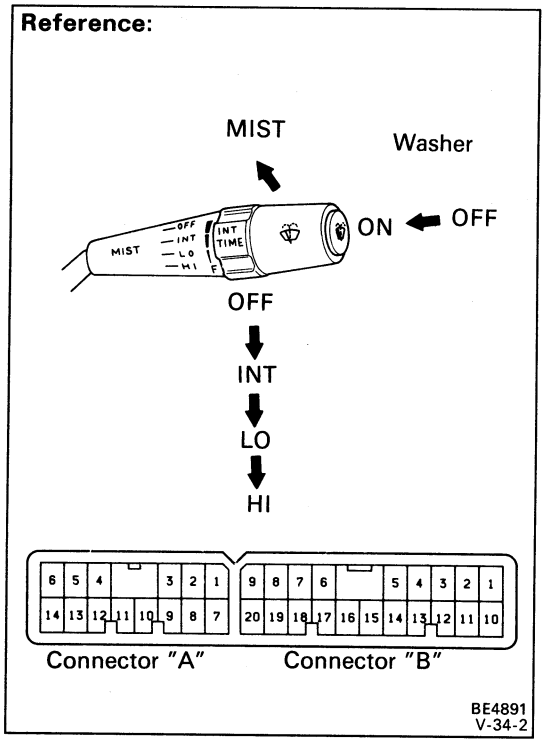

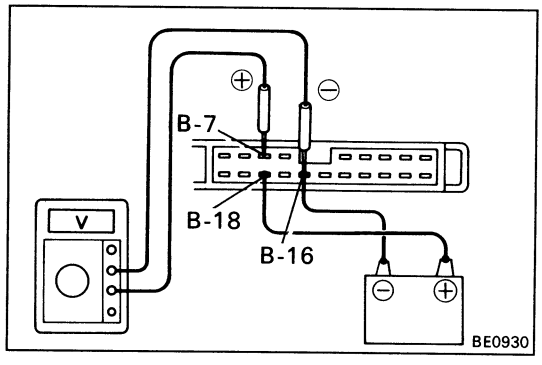

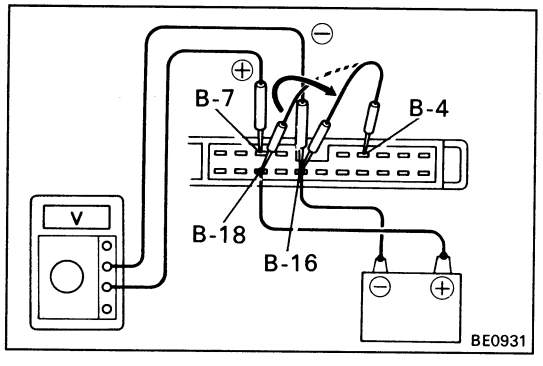

Parts Inspection

Wiper System

1. INSPECT SWITCH

(Wiper and Washer Switch/Continuity)

Terminal (Color) / Switch position			B-4 (L-R)	B-7 (L-B)	B-8 (L)	B-13 (R-O)	B-16 (B)	B-18 (L-W)
Wiper	OFF	OFF	○	○				
		MIST		○				○
	INT	OFF	○	○				
		MIST		○				○
	LO	OFF		○				○
		MIST		○				○
	HI	OFF				○		○
		MIST		○		○		○
Washer	OFF							
	ON				○		○	

If continuity is not as specified, replace the switch.

(Wiper and Washer Switch/Intermittent Wiper operation)

(a) Turn the wiper switch to INT position.

(b) (Variable Type)
Turn the intermittent time control switch to FAST position.

(c) Connect the positive (+) lead from the battery to terminal B-18 and the negative (–) lead to terminal B-16.

(d) Connect the positive (+) lead from the voltmeter to terminal B-7 and the negative (–) lead to terminal B-16, check that the meter needle indicates battery voltage.

(e) After connecting terminal B-4 to terminal B-18, connect to terminal B-16.
Then, check that the voltage rises from 0 volts to battery voltage within the times as shown in the table.

INT time control switch position	Voltage
FAST	1.6 ± 1 sec. — Battery voltage / 0 volts
SLOW	10.7 ± 5 sec. — Battery voltage / 0 volts
Non variable type	3.3 ± 1 sec. — Battery voltage / 0 volts

If operation is not as specified, replace the switch.

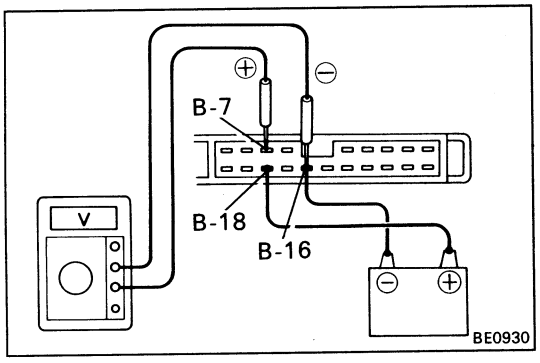

(Wiper and Washer Switch/Washer Linked Wiper Operation)

(a) Connect the positive (+) lead from the battery to terminal B-18 and the negative (–) lead to terminal B-16.

(b) Connect the positive (+) lead from the voltmeter to terminal B-7 and the negative (–) lead to terminal B-16.

(c) Push in the washer switch. Check that the voltage changes as shown in the table.

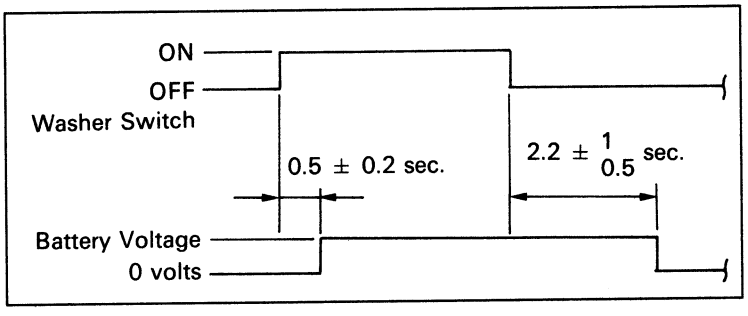

If operation is not as specified, replace the switch.

2. INSPECT MOTOR

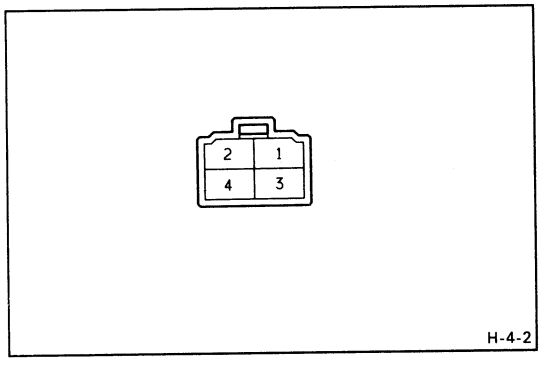

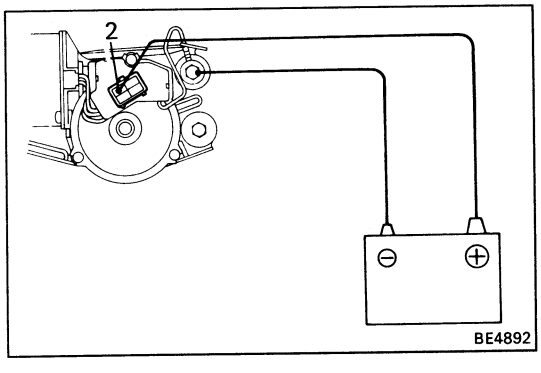

(Operation at Low Speed)

Connect the positive (+) lead from the battery to terminal 2 and the negative (–) lead to the motor body, check that the motor operates at low speed.

If operation is not as specified, replace the motor.

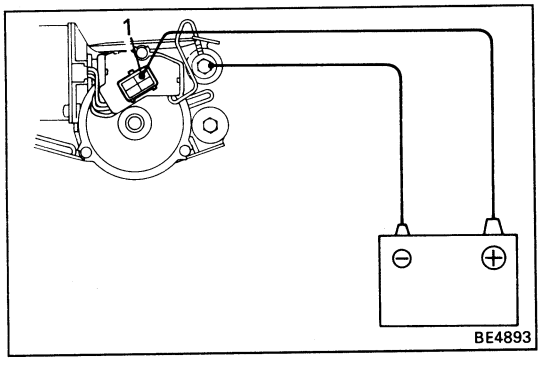

(Operation at High Speed)

Connect the positive (+) lead from the battery to terminal 1 and the negative (–) lead to the motor body, check that the motor operates at high speed.

If operation is not as specified, replace the motor.

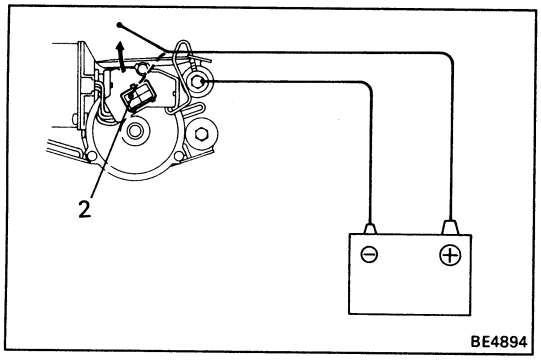

(Operation, Stopping at Stop Position)

(a) Operate the motor at low speed and stop the motor operation anywhere except at the stop position by disconnecting positive (+) lead from terminal 2.

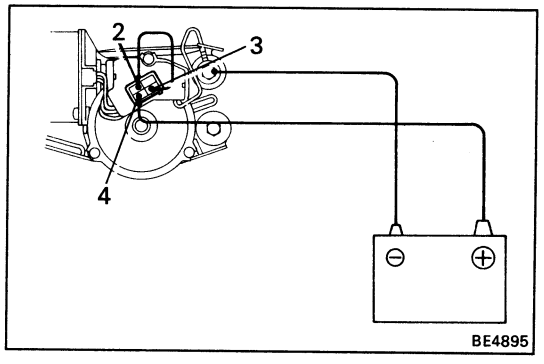

(b) Connect terminals 2 and 3.

(c) Connect the positive (+) lead from the battery to terminal 4 and the negative (–) lead to the motor body, check that the motor stops running at the stop position after the motor operates again.

If operation is not as specified, replace the motor.

Washer System

1. INSPECT WASHER SWITCH

See (Wiper and Washer Switch/Continuity) on page BE-45.

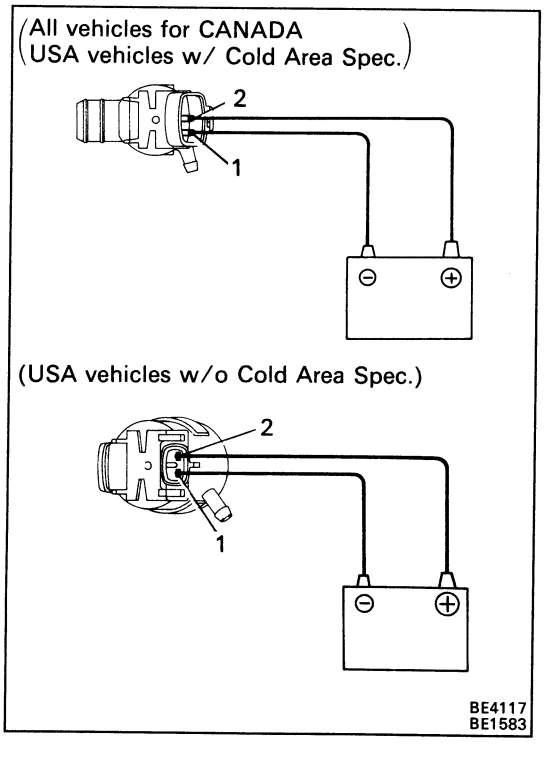

2. INSPECT WASHER MOTOR

Connect the positive (+) lead from the battery to terminal 2 and the negative (–) lead to terminal 1, check that the motor operates.

NOTICE: These tests must be performed quickly (within 20 seconds) to prevent the coil from burning out.

If operation is not as specified, replace the motor.

COMBINATION METER

Parts Location

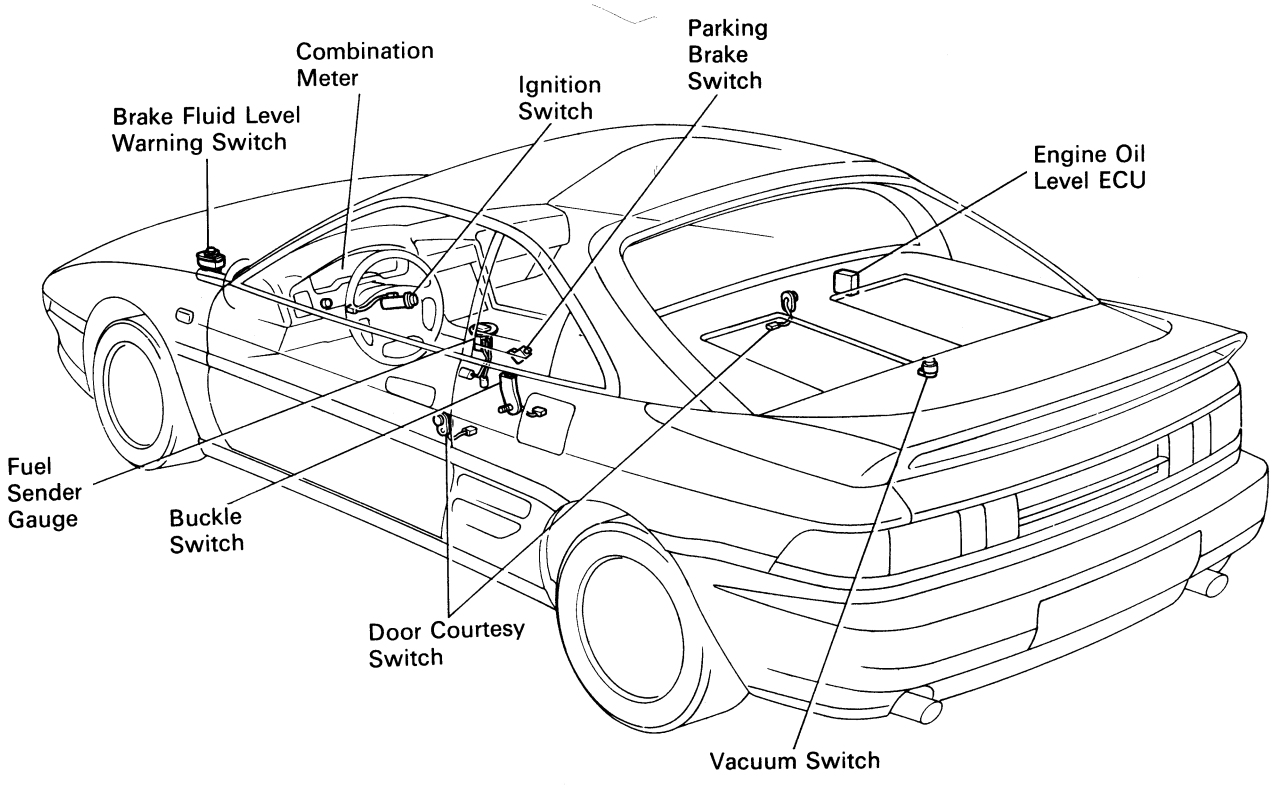

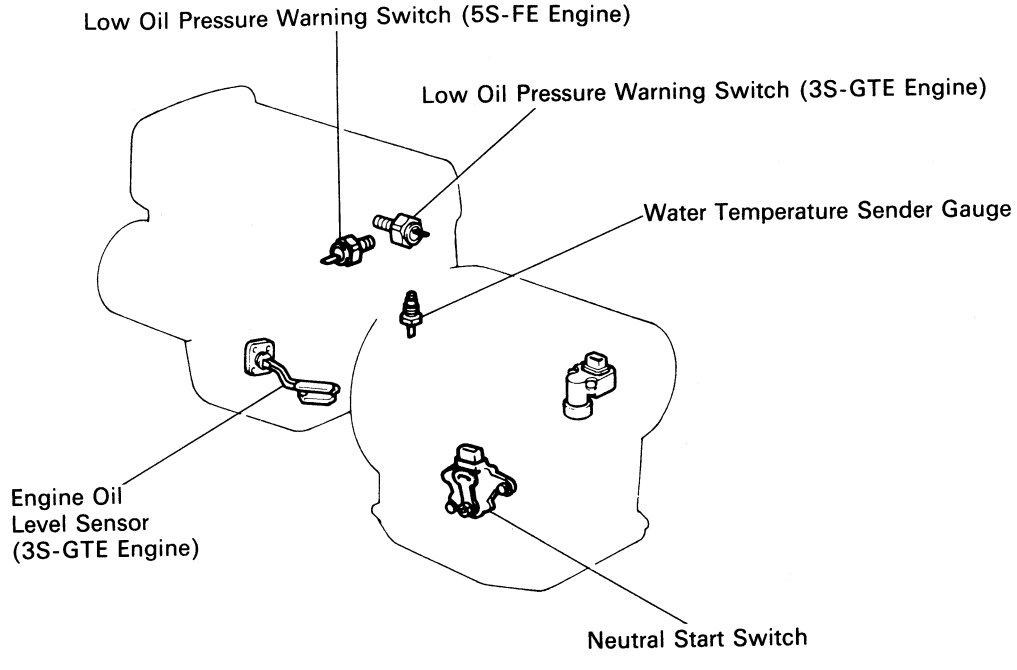

BE5236
BE5237

Meter Circuit

Connector "A" Connector "B" Connector "C" Connector "D"

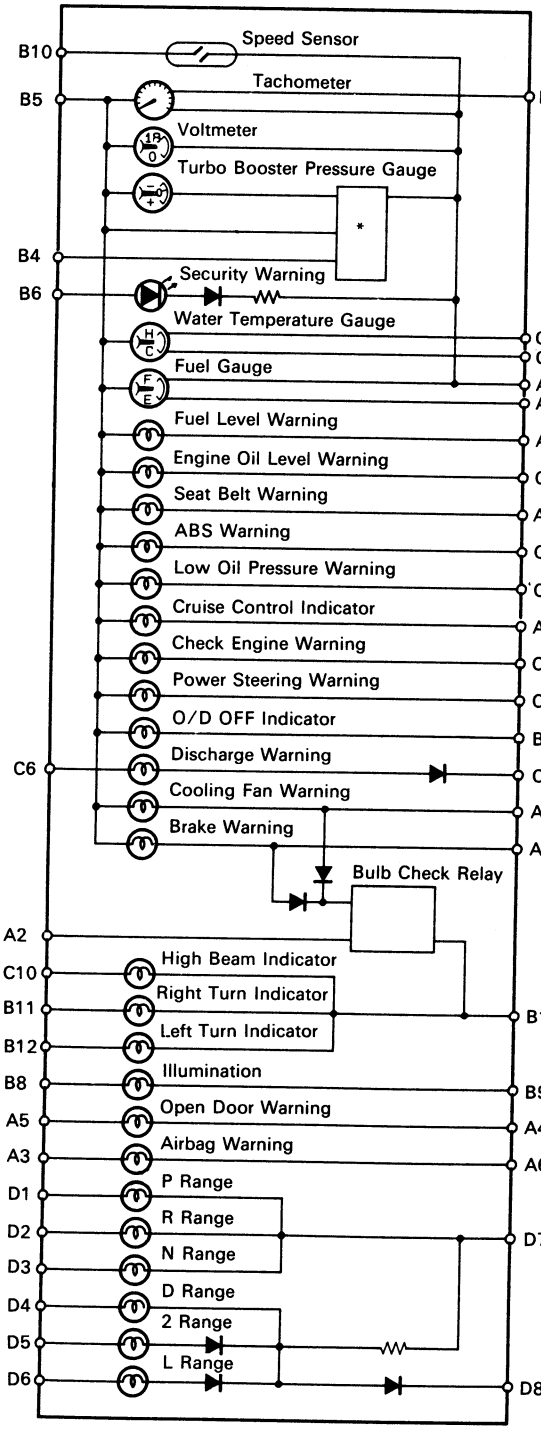

* Turbo boost pressure gauge drive circuit

BE1266 BE1267 BE1270 S-10-2
BE5062 BE5061

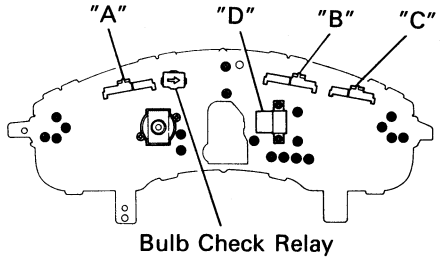

No.		Wiring connector side
A	1	Ground
	2	Starter Relay
	3	Fuse ECU-B
	4	Door Courtesy Switch – terminal 2
	5	Fuse DOME
	6	Airbag ECU
	7	Seatbelt Warning Relay
	8	Fuel Sender Gauge – terminal 2
	9	Brake Fluid Level Warning Switch – terminal 1, and Parking Brake Switch
	10	Cooling FAN ECU
	11	Cruise Control ECU
	12	Fuel Sender Gauge – terminal 1
B	1	Ground
	2	O/D OFF
	3	Igniter
	4	Turbo Pressure Sensor
	5	Fuse GAUGE
	6	Theft Deterrent ECU
	8	Taillight Control Relay
	9	Light Control Rheostat – terminal 3
	10	Speed Control Unit
	11	Turn Signal Switch
	12	Turn Signal Switch
C	1	Water Temperature Sender Gauge
	2	Ground
	3	Low Oil Pressure Warning Switch
	4	Engine Oil Level ECU
	5	Power Steering ECU
	6	Fuse IGN
	7	Alternator – terminal "L"
	8	Engine ECU
	9	ABS ECU
	10	Headlight Dimmer Switch
D	1	Neutral Start Switch
	2	Neutral Start Switch
	3	Neutral Start Switch
	4	Neutral Start Switch
	5	Neutral Start Switch
	6	Neutral Start Switch
	7	Ground
	8	Taillight Control Relay

Troubleshooting

Problem	Possible cause	Remedy	Page
*Gauges and indicator lights do not operate	GAUGE fuse faulty Wiring or ground faulty	Replace fuse and check for short Repair as necessary	BE-3
Speedometer does not operate	Speedometer cable faulty Speedometer faulty	Check cable Check speedometer	BE-52
Tachometer does not operate	Tachometer faulty Wiring or ground faulty	Check tachometer Repair as necessary	BE-52
Turbo boost pressure gauge does not operate	Turbo boost pressure gauge faulty Turbo pressure sensor faulty Turbo meter drive circuit faulty Wiring or ground faulty	Check turbo boost pressure faulty Check sensor Check drive circuit Repair as necessary	BE-60 BE-60 BE-61
Voltmeter does not operate	Voltmeter faulty Wiring or ground faulty	Check voltmeter Repair as necessary	BE-53
Fuel gauge does not operate	Receiver gauge faulty Sender gauge faulty Wiring or ground faulty	Check gauge Check gauge Repair as necessary	BE-53 BE-53
Fuel level warning light does not light up	Bulb burned out Warning switch faulty Wiring or ground faulty	Replace bulb Check gauge Repair as necessary	BE-54
Water temperature gauge does not operate	Receiver gauge faulty Sender gauge faulty Wiring or ground faulty	Check gauge Check gauge Repair as necessary	BE-55 BE-55
Engine oil level warning light does not light up	Bulb burned out Engine oil level sensor faulty Engine oil level ECU faulty Wiring or ground faulty	Replace bulb Check sensor Check ECU Repair as necessary	BE-56 BE-56
Low oil pressure warning light does not light up	Bulb burned out Low oil pressure warning switch faulty Wiring or ground faulty	Replace bulb Check switch Repair as necessary	BE-57

* Tachometer, Voltmeter, Turbo boost pressure gauge, Fuel gauge, Fuel level warning light, Water temperature gauge, Engine oil level warning light, Low oil pressure warning light, Brake warning light, ABS warning light, Check engine warning light, O/D OFF indicator light, Cooling fan warning light, Power steering warning light, Seat belt warning light and Cruise control indicator light.

Troubleshooting (Cont'd)

Problem	Possible cause	Remedy	Page
Brake warning light does not light up	Bulb burned out	Replace bulb	
	Brake fluid level warning switch faulty	Check switch	BE-58
	Parking brake switch faulty	Check switch	BE-58
	Wiring or ground faulty	Repair as necessary	
Seat belt warning light does not light up	Bulb burned out	Replace bulb	
	Buckle switch faulty	Check switch	BE-59
	Seat belt warning relay faulty	Check relay	BE-59
Open door warning light does not light up	DOME fuse faulty	Replace fuse and check for short	BE-3
	Bulb burned out	Replace bulb	
	Door courtesy switch faulty	Check switch	BE-58
	Wiring or ground faulty	Repair as necessary	
Meter illumination lights do not light up	Bulbs burned out	Replace bulbs	
	Light control rheostat faulty	Check rheostat	BE-62
	Wiring or ground faulty	Repair as necessary	

(mph)

Standard indication	Allowable range
20	20 – 23
40	40 – 43.5
60	60 – 64
80	80 – 84.5
100	100 – 105
120	120 – 125.5
140	140 – 146

(km/h)

Standard indication	Allowable range
20	18 – 23
40	40 – 44
60	60 – 64.5
80	80 – 85
100	100 – 105
120	120 – 125.5
140	140 – 146
160	160 – 167
180	180 – 188
200	200 – 209
220	220 – 230
240	240 – 251

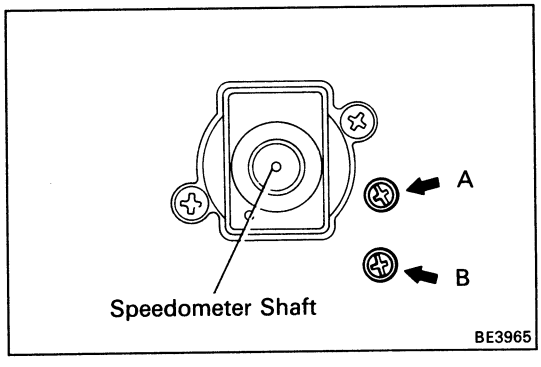

DC 13.5V, 25°C (77°F) rpm	
Standard indication	Allowable range
700	610 – 750
3,000	2,800 – 3,200
5,000	4,800 – 5,200
7,000	6,700 – 7,300

Parts Inspection

Speedometer System

1. INSPECT SPEEDOMETER (ON-VEHICLE)

(a) Using a speedometer tester, inspect the speedometer for allowable indication error and check the operation of the odometer.

HINT: The wear and tire over or under inflation will increase the indication error.

If error is excessive, replace the speedometer.

(b) Check the speedometer for pointer vibration and abnormal noise.

HINT: Pointer vibration can be caused by a loose speedometer cable.

2. INSPECT SPEED SENSOR

Check that there is continuity between terminals A and B four times per each revolution of the speedometer shaft.

If operation is not as specified, replace the speedometer.

Tachometer System

INSPECT TACHOMETER (ON-VEHICLE)

(a) Connect a tune-up test tachometer, and start the engine.

NOTICE:

- **Reversing the connection of the tachometer will damage the transistors and diodes inside.**
- **When removing or installing the tachometer, be careful not to drop or subject it to heavy shocks.**

(b) Compere the tester and tachometer indications.

If error is excessive, replace the tachometer.

Voltmeter System

INSPECT VOLTMETER (ON-VEHICLE)

Compare the tester and voltmeter indications.

If error is excessive, replace the voltmeter.

Fuel Gauge System

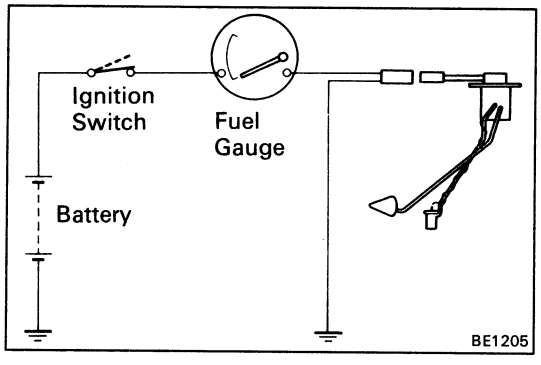

1. INSPECT RECEIVER GAUGE (Operation)

(a) Disconnect the connector from the sender gauge.

(b) Turn the ignition switch ON, check that the receiver gauge needle indicates EMPTY.

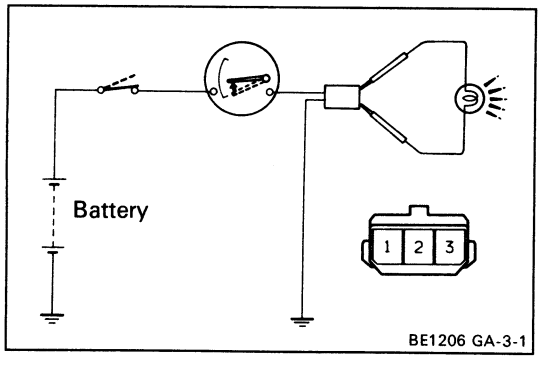

(c) Connect terminals 1 and 3 on the wire harness side connector through a 3.4 W test bulb.

(d) Turn the ignition switch ON, check that the bulb lights up and receiver gauge needle moves toward the full side.

HINT: Because of the silicon oil in the gauge, it will take a short time for the needle to stabilize.

If operation is not as specified, inspect the receiver gauge resistance.

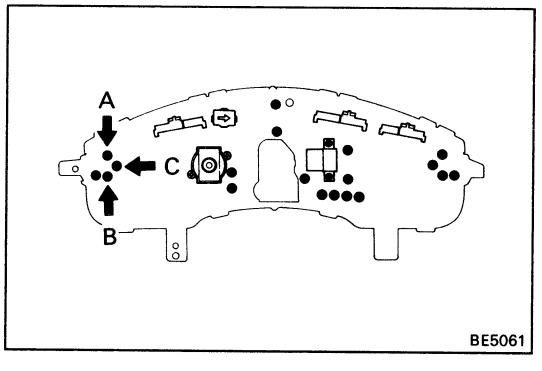

(Resistance)

Measure the resistance between terminals.

Between terminals	Resistance (Ω)
A – B	Approx. 101.9
A – C	Approx. 203.2
B – C	Approx. 101.3

If resistance value is not as specified, replace the receiver gauge.

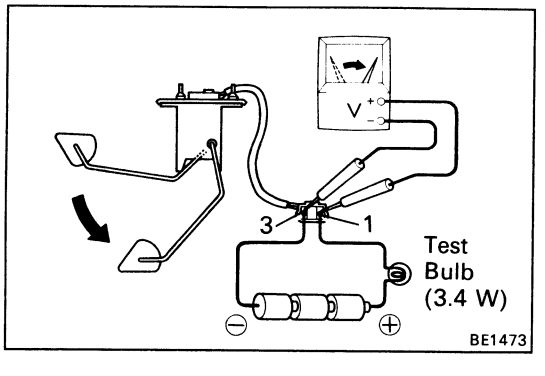

2. INSPECT SENDER GAUGE (Operation)

(a) Connect a series of three 1.5V dry cell batteries.

(b) Connect the positive (+) lead from the dry cell batteries to terminal 1 through a 3.4 W test bulb and the negative (–) lead to terminal 3.

(c) Check that the voltage rises between terminals 1 and 3 as the float is moved from the top to bottom position.

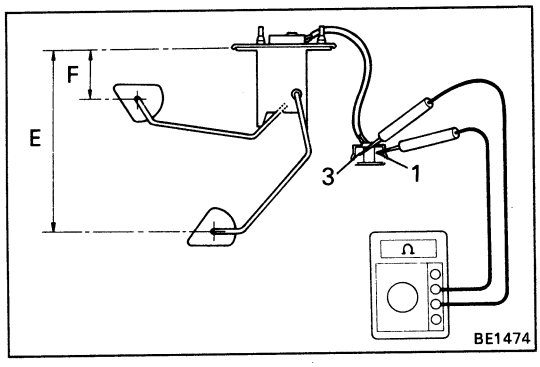

(Resistance)

Measure the resistance between terminals 1 and 3 for each float position.

Float position mm (in.)		Resistance (Ω)
F	Approx. 59.9 (2.358)	3 ± 1.0
E	Approx. 228.1 (8.980)	110 ± 7.7

If resistance value is not as specified, replace the sender gauge.

Fuel Level Warning System

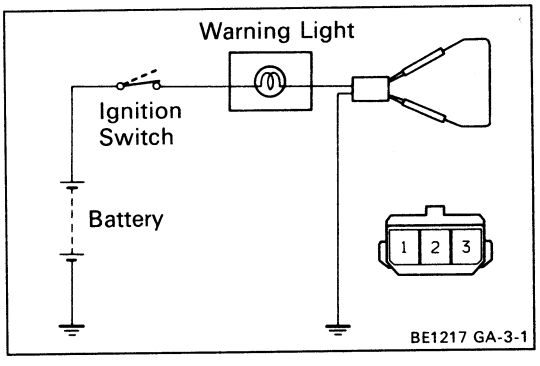

1. INSPECT WARNING LIGHT

(a) Disconnect the connector from the sender gauge.

(b) Connect terminals 2 and 3 on the wire harness side connector.

(c) Turn the ignition switch ON, check that the warning light lights up.

If the warning light does not light up, test the bulb.

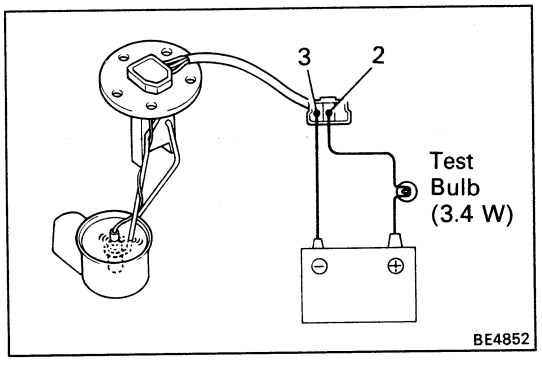

2. INSPECT WARNING SWITCH

(a) Apply battery voltage between terminals 2 and 3 through a 3.4W test bulb, check that the bulb lights up.

HINT: It will take a short time for the bulb to light up.

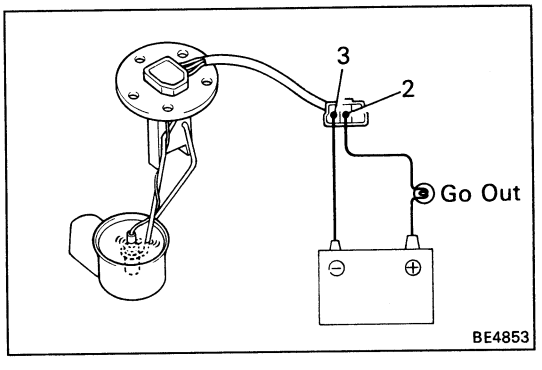

(b) Submerge the switch in fuel, check that the bulb goes out.

If operation is not as specified, replace the sender gauge.

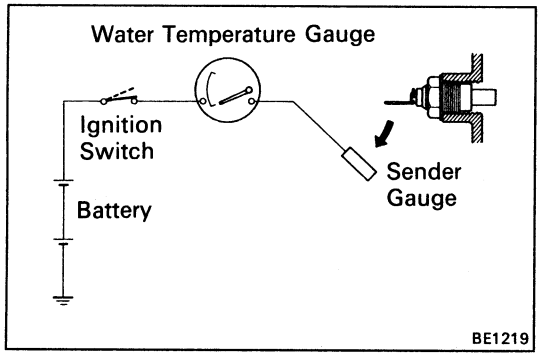

Water Temperature Gauge System

INSPECT RECEIVER GAUGE

(Operation)

(a) Disconnect the connector from the sender gauge.

(b) Turn the ignition switch ON, check that the receiver gauge needle indicates COOL.

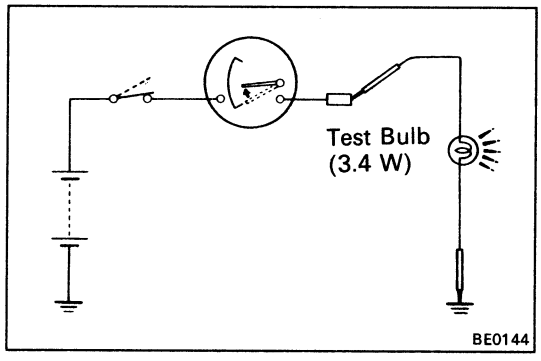

(c) Ground terminal on the wire harness side connector through a 3.4 W test bulb.

(d) Turn the ignition switch ON, check that the bulb lights up and receiver gauge needle moves toward the hot side.

If operation is as specified, replace the sender gange. Then, recheck the system.

If operation is not as specified, measure the receiver gauge resistance.

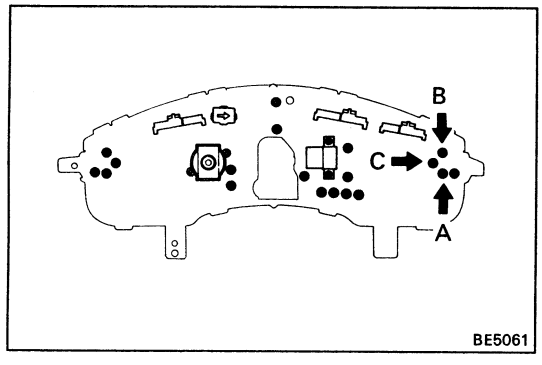

(Resistance)

Measure the resistance between terminals.

HINT: Connect the test leads so that the current from the ohmmeter can flow according to the chart order.

Between terminals	Resistance (Ω)
A – B	Approx. 54
A – C	Approx. 146.2
B – C	Approx. 200.2

If resistance value is not as specified, replace the receiver gauge.

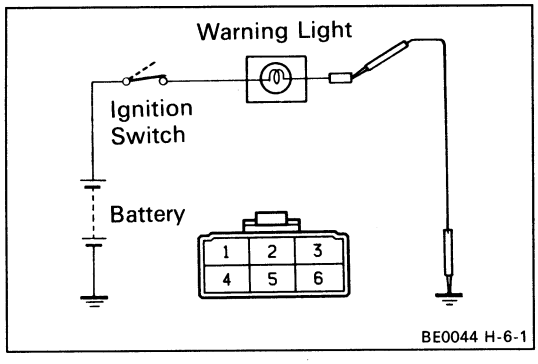

Engine Oil Level Warning System

1. INSPECT WARNING LIGHT

(a) Disconnect the connector from the engine oil level ECU.

(b) Ground terminal 1 on the wire harness side connector.

(c) Turn the ignition switch ON, check that the warning light lights up.

If the warning light does not light up, test the bulb.

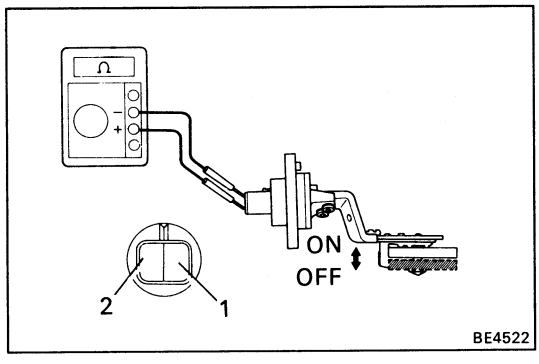

2. INSPECT ENGINE OIL LEVEL SENSOR

(a) Check that there is continuity between terminal with the switch each position.

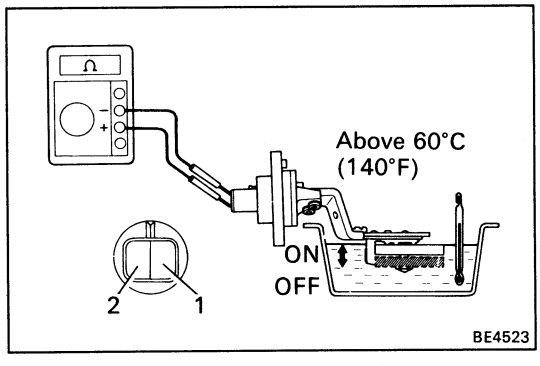

(b) Heat the switch to above 60°C (140°F) in an oil bath.

(c) Check that there is continuity between terminals with the switch ON (float up).

(d) Check that there is no continuity between terminals with the switch OFF (float down).

If operation is not as specified, replace the switch.

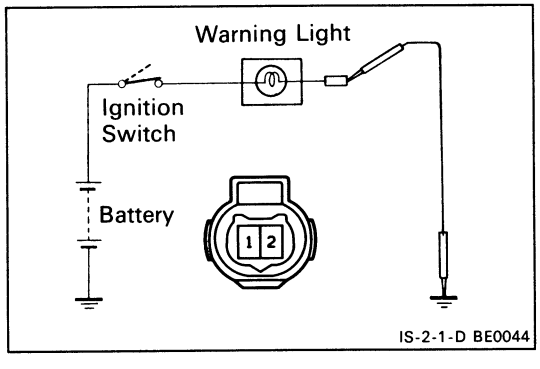

3. INSPECT ENGINE OIL LEVEL ECU (Operation)

(a) Disconnect the connector from the engine oil level sensor.

(b) Ground terminal 1 on the wire harness side connector.

(c) Turn the ignition switch ON, check that the warning light lights up approximately 40 seconds later.

If operation is not as specified, inspect the relay circuit.

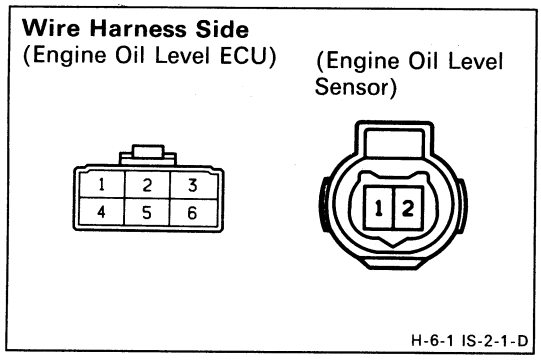

(Relay Circuit)

(a) Disconnect the connectors from the engine oil level ECU and engine oil level sensor.

(b) Inspect the connectors on the wire harness side as shown in the chart.

Check for	Tester connection	Condition		Specified value
Continuity	2/6 – 1/2	Constant		Continuity
	5/6 – 2/2	Constant		Continuity
Voltage	3/6 – Ground	Engine condition	Stopped	No voltage
			Running	Battery voltage
	6/6 – Ground	Ignition switch position	LOCK or ACC	No voltage
			ON	Battery voltage

If circuit is as specified, replace the engine oil level ECU.

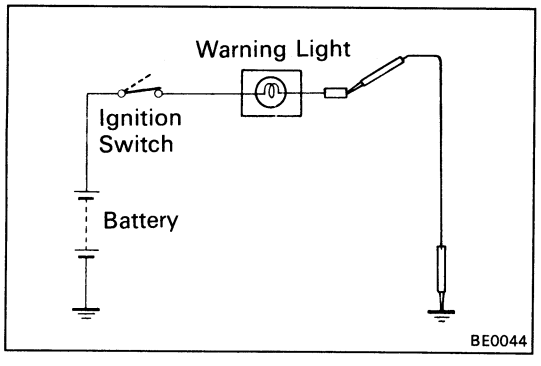

Low Oil Pressure Warning System

1. INSPECT WARNING LIGHT

(a) Disconnect the connector from the warning switch and ground terminal on the wire harness side connector.

(b) Turn the ignition switch ON, check that the warning light lights up.

If the warning light does not light up, test the bulb.

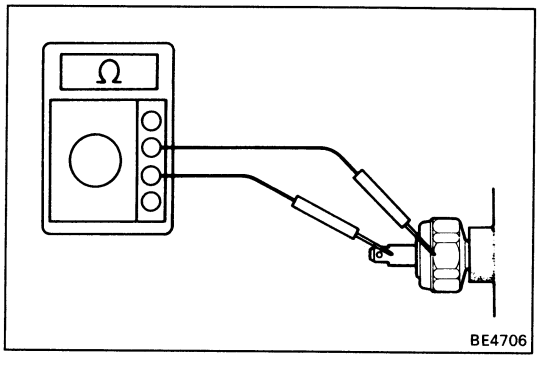

2. INSPECT LOW OIL PRESSURE WARNING SWITCH

(a) Check that there is continuity between terminal and ground with the engine stopped.

(b) Check that there is no continuity between terminal and ground with the engine running.

HINT: Oil pressure should be over 0.5 kg/cm^2 (7.1 psi, 49 kPa).

If operation is not as specified, replace the switch.

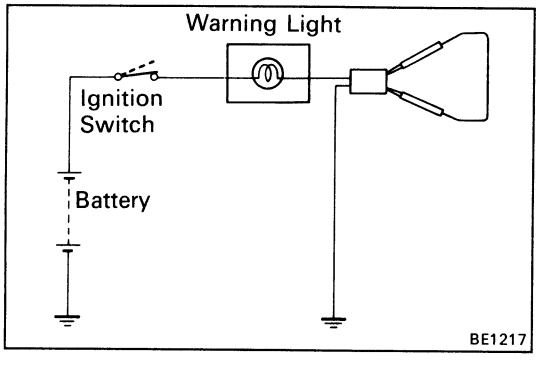

Brake Warning System

1. INSPECT WARNING LIGHT

(a) Disconnect the connectors from the brake fluid level warning switch and parking brake switch.

(b) Connect terminals on the wire harness side of the level warning switch connector.

(c) Turn the ignition switch ON, check that the warning light lights up.

If the warning light does not light up, test the bulb.

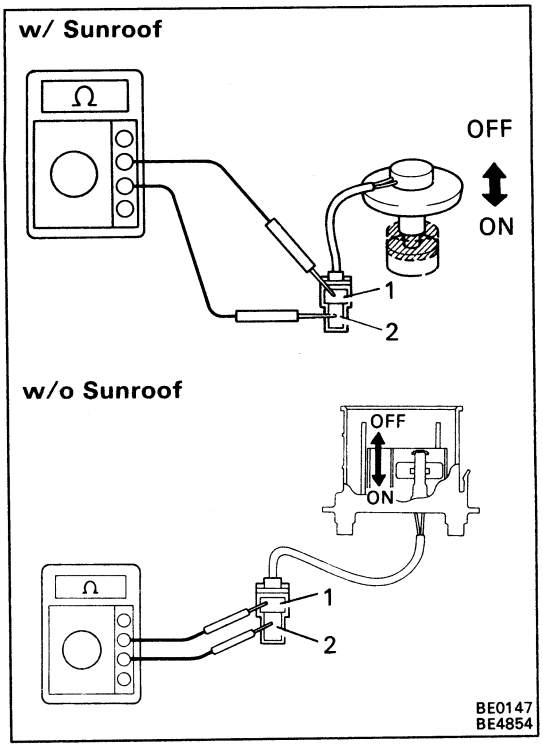

2. **INSPECT SWITCHES**
(Brake Fluid Level Warning Switch)

(a) Check that there is no continuity between terminals with the switch OFF (float up).

(b) Check that there is continuity between terminals with the switch ON (float down).

If operation is not as specified, replace the switch.

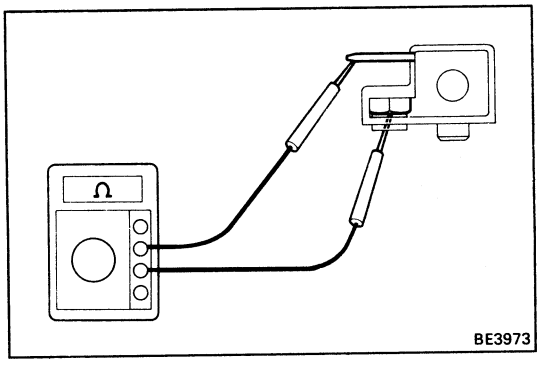

(Parking Brake Switch)

(a) Check that there is continuity between terminals with the switch ON (switch pin released).

(b) Check that there is no continuity between terminals with the switch OFF (switch pin pushed in).

Seat Belt Warning System

(Wiring Diagram)

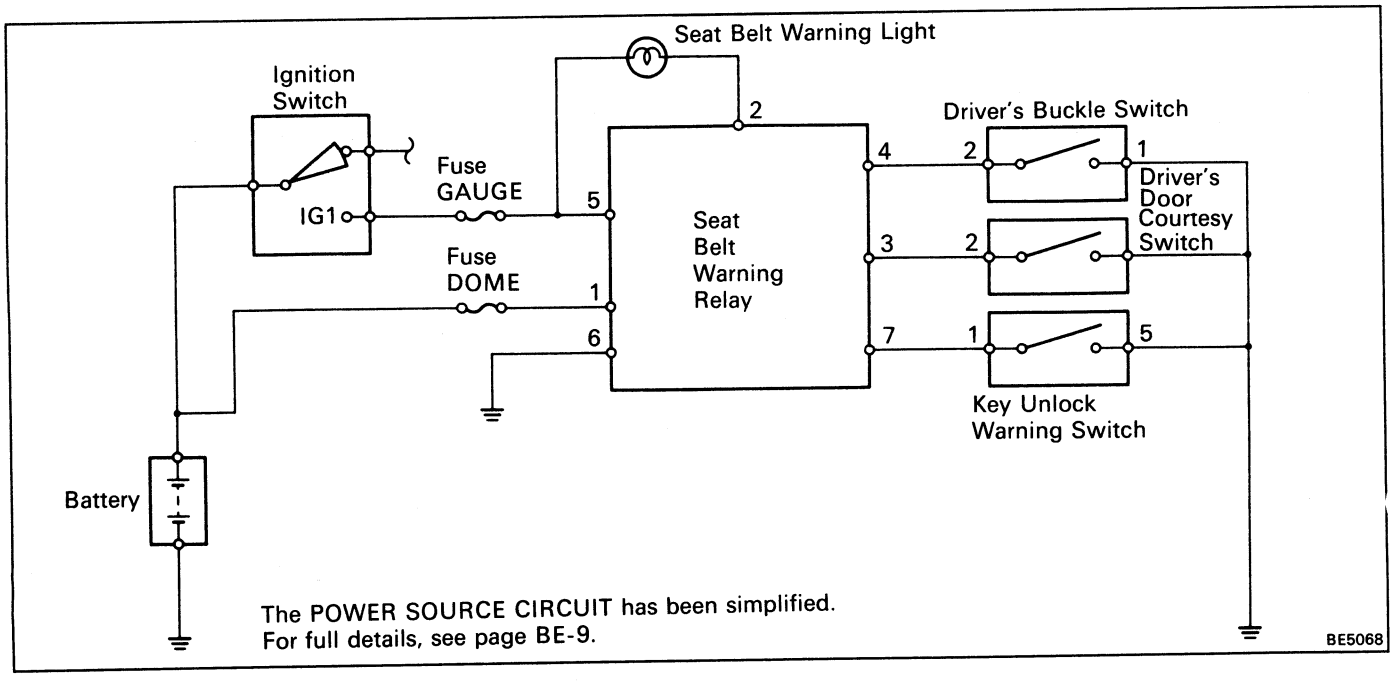

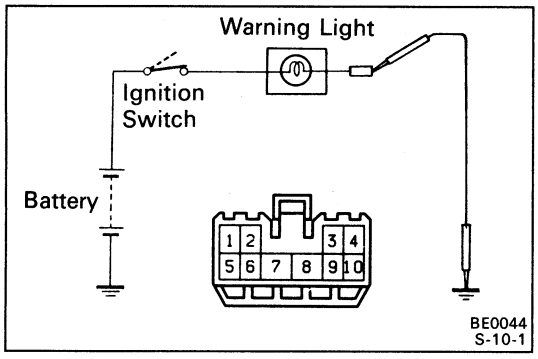

1. INSPECT WARNING LIGHT

(a) Disconnect the connector from the seat belt warning relay.

(b) Ground terminal 5 on the wire harness side.

(c) Turn the ignition switch ON, check that the warning light lights up.

If the warning lights does not light up, test the bulb.

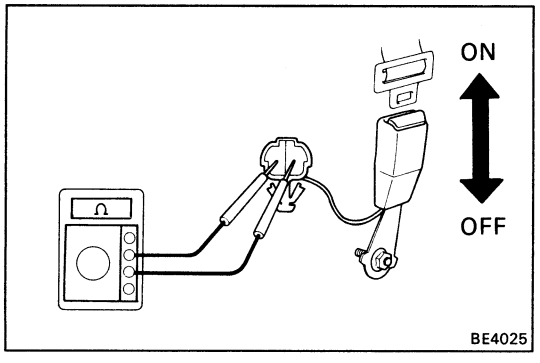

2. INSPECT BUCKLE SWITCH

(a) Check that there is continuity between terminals on the switch side connector with the switch ON (belt fastened).

(b) Check that there is no continuity between terminals on the switch side connector with the switch OFF (belt unfastened).

If operation is not as specified, replace the seat belt inner.

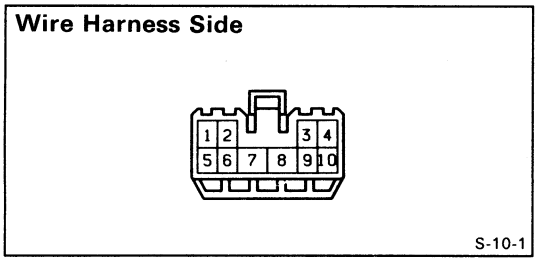

3. INSPECT SEAT BELT WARNING RELAY (Relay Circuit)

Disconnect connector and inspect connector on wire harness side as shown in the chart.

Check for	Tester connector	Condition		Specified value
Continuity	3 – Ground	Driver's door courtesy switch position	OFF (door closed)	No continuity
			ON (door opened)	Continuity
	4 – Ground	Driver's buckle switch position	OFF (seat belt unfastened)	No continuity
			ON (seat belt fastened)	Continuity
	6 – Ground	Constant		Continuity
	7 – Ground	Key unlock warning switch position	OFF (ignition key removed)	No continuity
			ON (ignition key set)	Continuity
Voltage	1 – Ground	Constant		Battery voltage
	2 – Ground 5 – Ground	Ignition switch position	LOCK or ACC	No voltage
			ON	Battery voltage

If circuit is as specified, replace the relay.

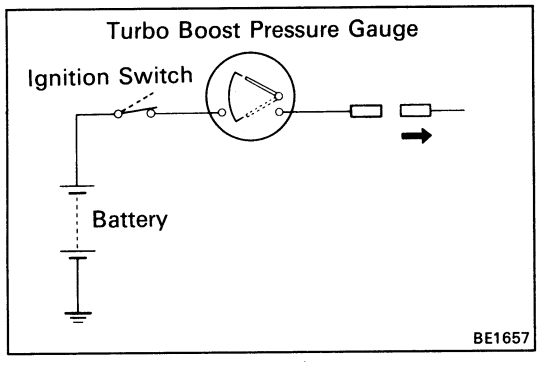

Turbo Boost Pressure Gauge System

1. INSPECT TURBO BOOST PRESSURE GAUGE (Operation)

(a) Disconnect the connector from the pressure sensor.

(b) Turn the ignition switch ON, check that the gauge needle moves to upper position.

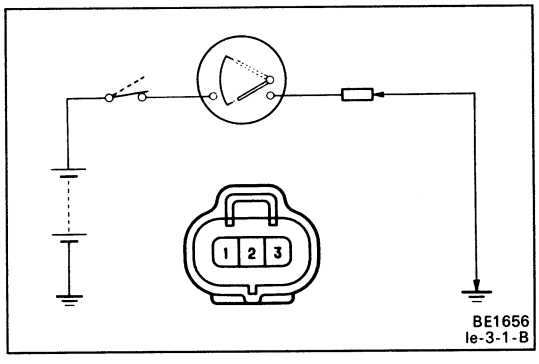

(c) Ground terminal 2 on the wire harness side.

Check that the gauge needle moves to lower position.

If operation is not as specified, inspect the turbo boost pressure gauge drive circuit and resistance.

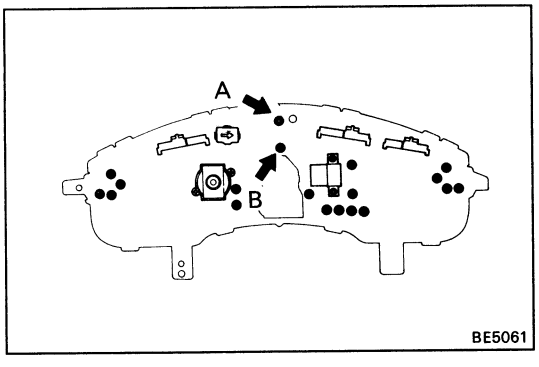

(Resistance)

Measure the resistance between terminals A and B.

Resistance: Approx. 72 Ω

If resistance value is not as specified, replace the turbo boost pressure gauge.

2. INSPECT TURBO PRESSURE SENSOR

(a) Connect a series of three 1.5 V dry cell batteries.

(b) Connect the positive (+) lead from the dry cell batteries to terminal 3 and the negative (–) lead to terminal 1.

(c) Connect the positive (+) lead from the voltmeter to terminal 2 and the negative (–) lead to terminal 1.

(d) Check that the voltage between terminals 2 and 1.

Voltage: Approx. 2.4 V

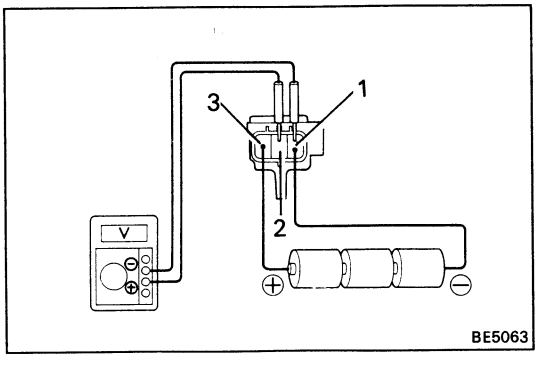

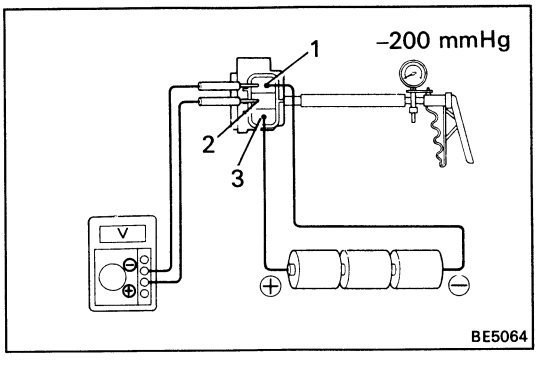

(e) Apply 200 mmHg (7.87 in.Hg. 26.7 kPa) of vacuum.

Check that the voltage drops below approximately 2.4 V.

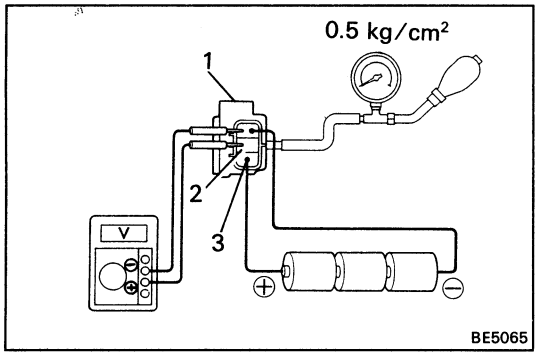

(f) Using SST, apply 0.5 kg/cm² (7.1 psi, 49 kPa) of pressure.

Check that the voltage rises approximately 2.4 V.

SST 09992-00241

If operations are not as specified. replace the sensor.

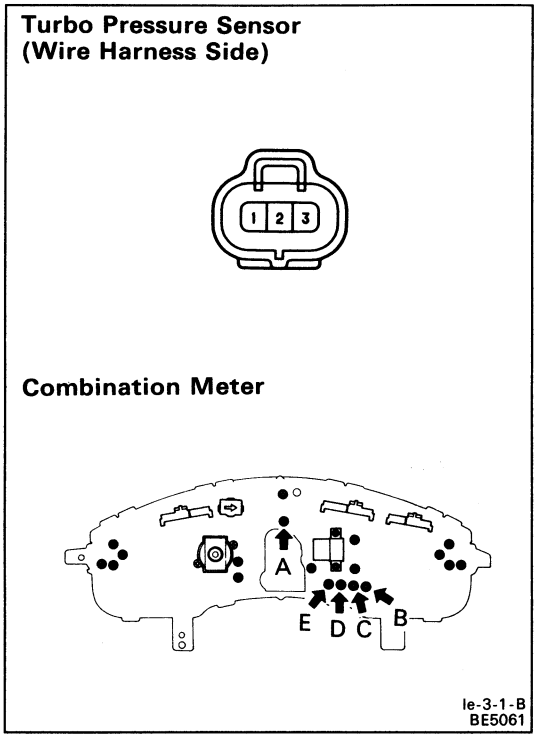

3. INSPECT TURBO BOOST PRESSURE GAUGE DRIVE CIRCUIT

(a) Disconnect the connector from the turbo pressure sensor.

(b) Remove the combination meter with connected three connectors.

(c) Inspect the connector on the wire harness side and terminals of the turbo boost pressure gauge drive circuit as shown in the chart.

Check for	Tester connection	Condition		Specified value
Continuity	A – B	Constant		Continuity
	C – 2	Constant		Continuity
	D – Ground	Constant		Continuity
	1 – Ground	Constant		Continuity
Voltage	E – Ground	Ignition Switch position	LOCK or ACC	No voltage
			ON	Battery voltage
	3 – Ground	Ignition Switch position	LOCK or ACC	No voltage
			ON	Battery voltage

If circuit is as specified, replace the drive circuit.

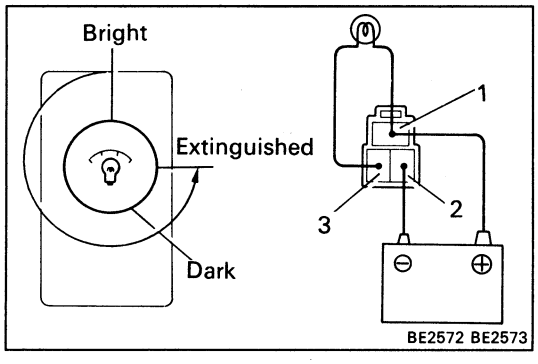

Meter Illumination Control System

INSPECT LIGHT CONTROL RHEOSTAT

(a) Connect terminals 1 and 3 through a 3.4 W test bulb.

(b) Connect the positive (+) lead from the battery to terminal 1 and the negative (–) lead to terminal 2.

(c) Turn the rheostat knob to fully counterclockwise, check that the test bulb goes out.

(d) Gradually turn the rheostat knob to clockwise, check that the test bulb brightness changes from dark to bright.

If operation is not as specified, replace the rheostat.

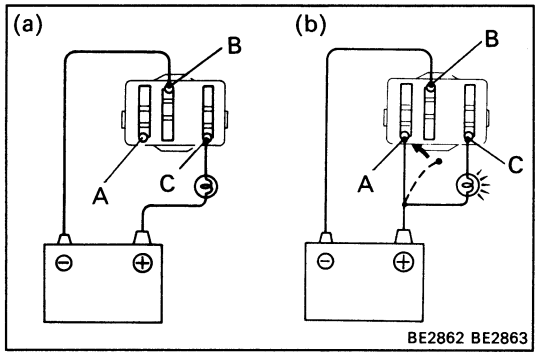

Bulb Check System

INSPECT BULB CHECK RELAY

(a) Connect the positive (+) lead from the battery to terminal C through a 1.4 W test bulb and the negative (–) lead to terminal B, check that the test bulb does not light up.

(b) Connect the positive (+) lead from the battery to terminal A, check that the test bulb lights up.

If operation is not as specified, replace the relay.

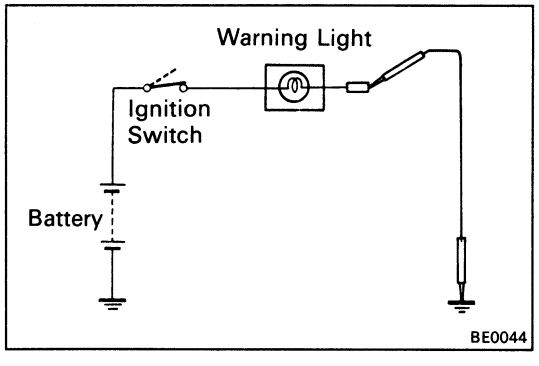

Open Door Warning System

1. INSPECT WARNING LIGHT

(a) Disconnect the connector from the door courtesy switch and groung terminal on the wire harness side connector.

(b) Turn the ignition switch ON, check that the warning light lights up.

If the warning does not light up, test the bulb.

2. INSPECT DOOR COURTESY SWITCH

See step 1 of Illuminated Entry Sysatem on page BE-41.

DEFOGGER SYSTEM

Parts Location

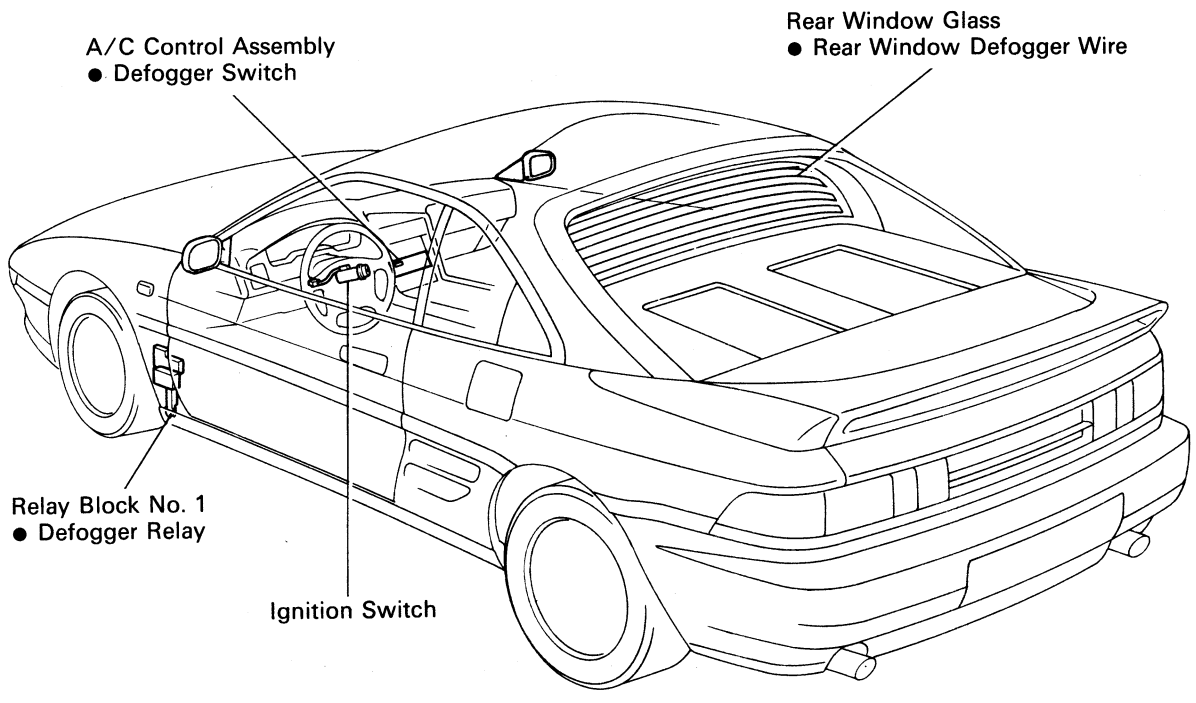

BE5238

Wiring and Connector Diagrams

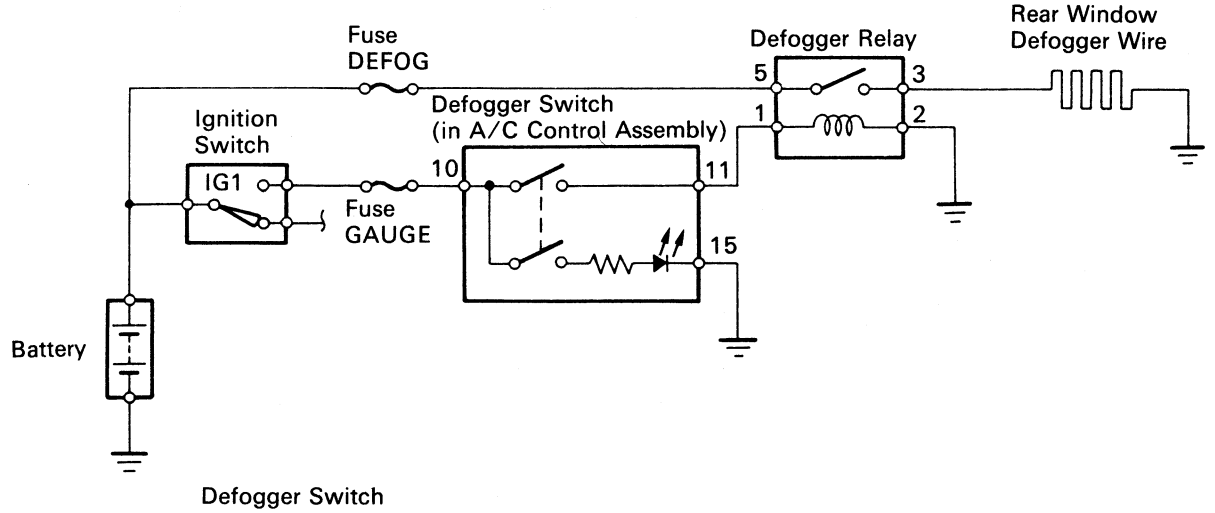

Defogger Switch
(in A/C Control Assembly)

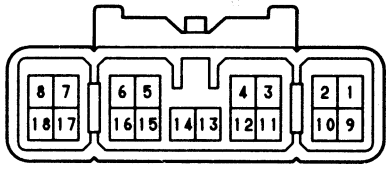

Defogger Relay

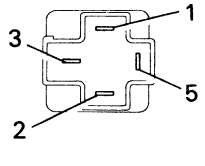

The POWER SOURCE CIRCUIT has been simplified. For full details, see page BE-9.

BE4968
e-18-2 BE4049

Troubleshooting

Problem	Possible cause	Remedy	Page
All defogger systems do not operate	DEFOG fuse faulty	Replace fuse and check for short	BE-3
	GAUGE fuse faulty	Replace fuse and check for short	BE-3
	Defogger switch faulty	Check switch	BE-64
	Defogger relay faulty	Check relay	BE-65
	Wiring or ground faulty	Repair as necessary	
Rear window defogger system does not operate	Defogger wires broken	Check wires	BE-65
	Wiring or ground faulty	Repair as necessary	
Indicator light does not light up	Bulb burned out	Replace bulb	
	Wiring or ground faulty	Repair as necessary	

On-Vehicle Inspection

Defogger Idle-Up System

Set the defogger switch ON, check that the engine revolutions increase.

Parts Inspection

Rear Window Defogger System

1. **INSPECT DEFOGGER SWITCH (Continuity)**

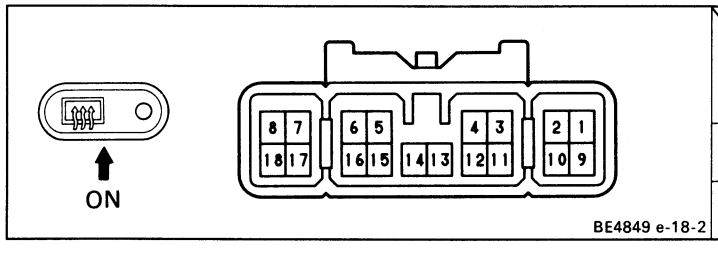

Terminal / Switch Position	10	11
OFF		
ON	○———	———○

If continuity is not as specified, replace the switch.

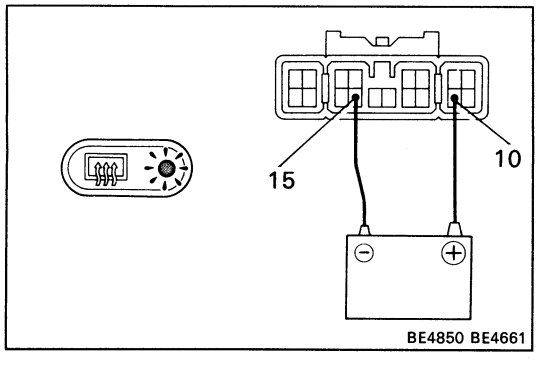

(Indicator Light Operation)

(a) Connect the positive (+) lead from the battery to terminal 10 and the negative (–) lead to terminal 15.

(b) Push the defogger switch ON.

(c) Check that the indicator light lights up.

If the indicator light does not light up, replace the switch.

2. INSPECT DEFOGGER RELAY (Continuity)

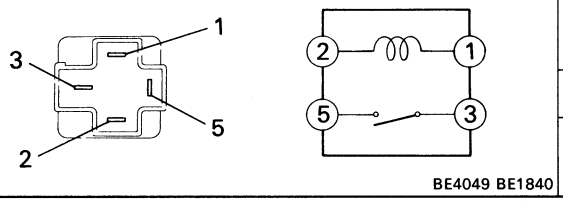

Terminal / Condition	1	2	3	5
Constant	○—≈—○			
Apply battery voltage to terminals 1 and 2.			○	○

If continuity is not as specified, replace the relay.

3. INSPECT DEFOGGER WIRES

NOTICE:

- **When cleaning the glass, use a soft, dry cloth, and wipe the glass in the direction of the wire. Take care not to damage the wires.**
- **Do not use detergents or glass cleaners with abrasive ingredients.**
- **When measuring voltage, wind a piece of tin foil around the top of the negative probe and press the foil against the wire with your finger as shown.**

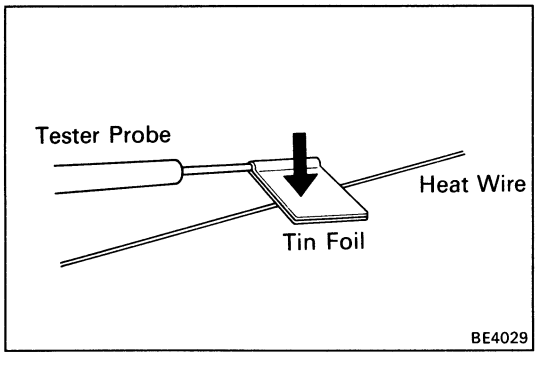

(Wire Breakage)

(a) Turn the ignition switch ON.

(b) Push in the defogger switch.

(c) Inspect the voltage at the center of each heat wire as shown.

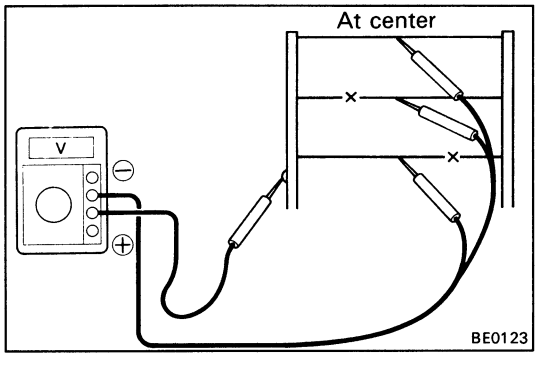

Voltage	Criteria
Approx. 5V	Okay (No break in wire)
Approx. 10V or 0V	Broken Wire

HINT: If there is approximately 10 volts, the wire is broken between the center of the wire and the positive (+)end. If there is no voltage, the wire is broken between the center of the wire and ground.

(Wire Breakage Point)

(a) Place the voltmeter positive (+) lead against the defogger positive (+) terminal.

(b) Place the voltmeter negative (–) lead with the foil strip against the heat wire at the positive (+) terminal end and slide it toward the negative (–) terminal end.

(c) The point where the voltmeter deflects from zero to several volts is the place where the heat wire is broken.

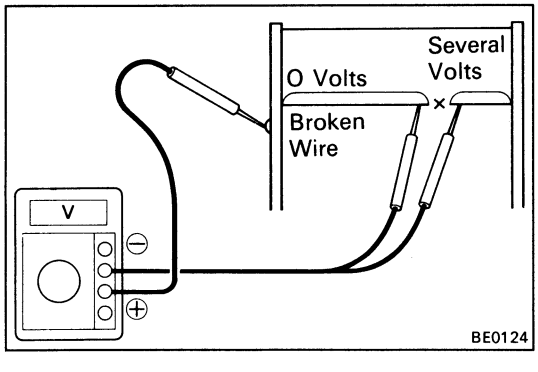

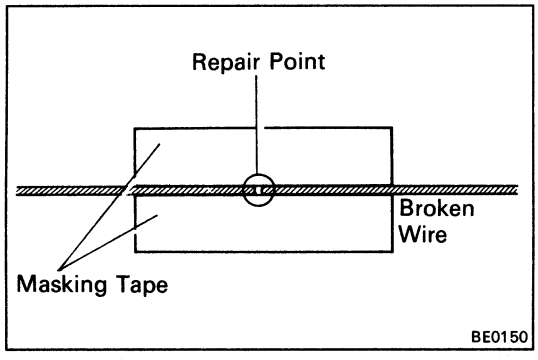

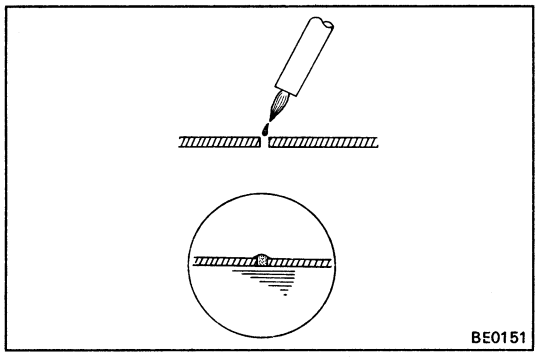

HINT: If the heat wire is not broken, the voltmeter indicates 0 volts at the positive (+) end of the heat wire but gradually increases to about 12 volts as the meter probe is moved to the other end.

4. REPAIR DEFOGGER WIRES

(a) Clean the broken wire tips with a grease, wax and silicone remover.

(b) Place the masking tape along both sides of the wire to be repaired.

(c) Thoroughly mix the repair agent (Dupont paste No. 4817).

(d) Using a fine tip brush, apply a small amount to the wire.

(e) After a few minutes, remove the masking tape.

(f) Allow the repair to stand at least 24 hours.

POWER WINDOW CONTROL SYSTEM

Parts Location

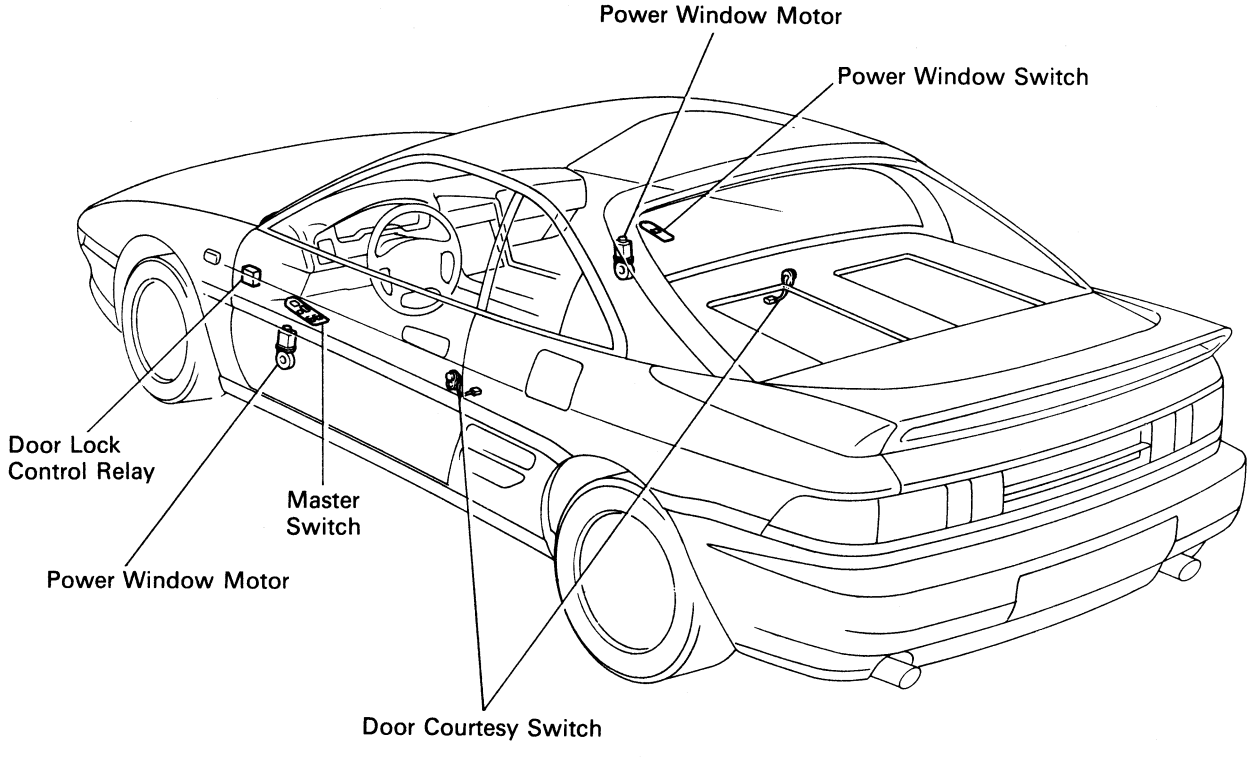

BE5239

Wiring and Connector Diagrams

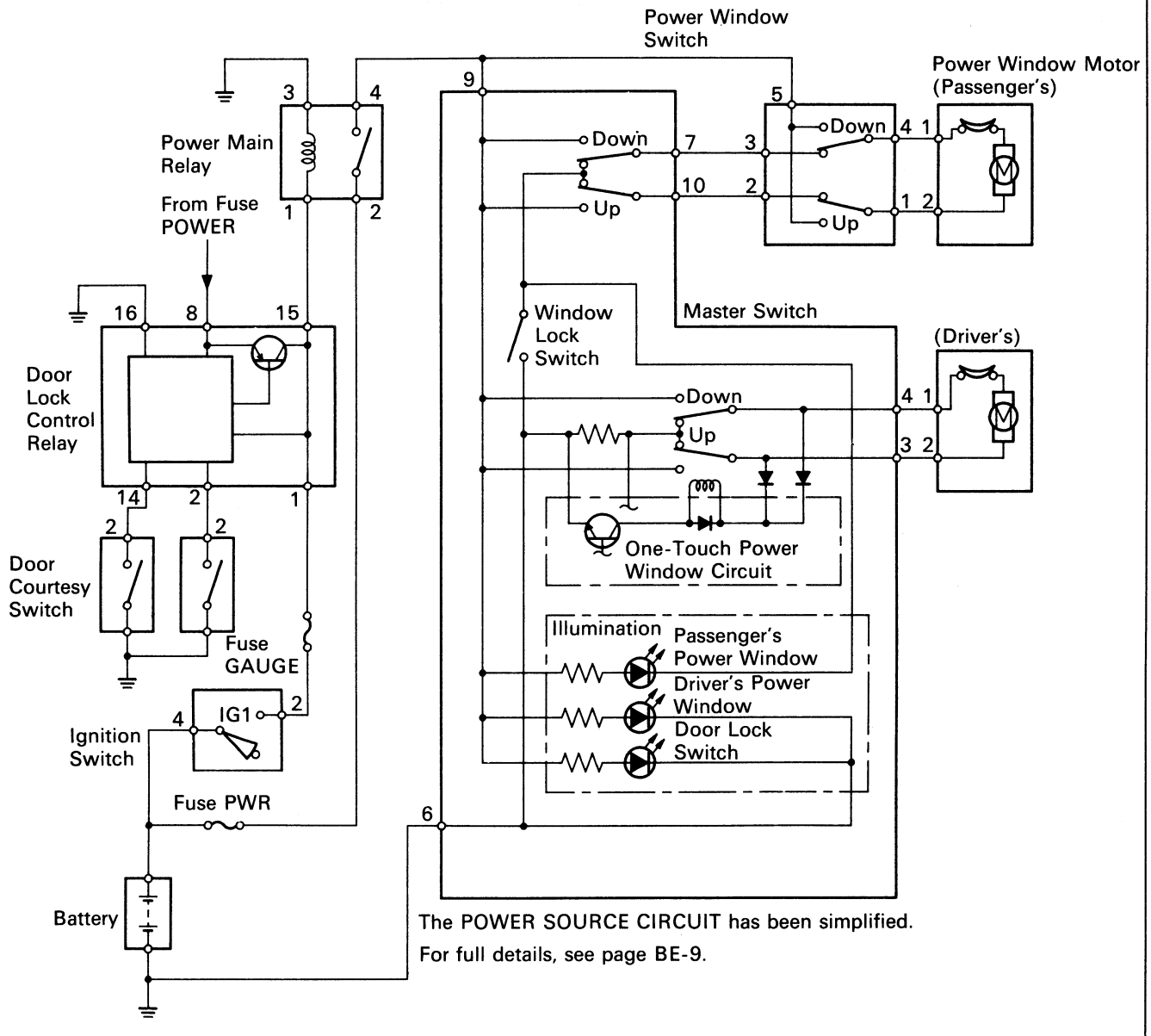

Master Switch

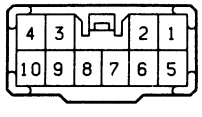

Power Window Switch

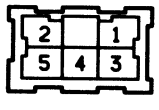

Power Window Motor

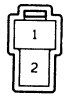

Power Main Relay

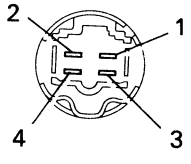

Door Lock Control Relay

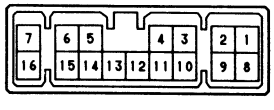

Door Courtesy Switch

Ignition Switch

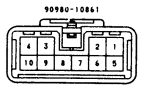

BE5240
S-10-2 G-5-2-A H-2-2 BE1647
S-16-2-A e-2-1-G e-10-2-B

Troubleshooting

Problem	Possible cause	Remedy	Page
Power window does not operate at all	GAUGE fuse blown PWR fuse blown Power main relay faulty Wiring or ground faulty	Replace fuse and check for short Replace fuse and check for short Check relay Repair as necessary	BE-3 BE-3 BE-72
One-touch power window does not operate	Power window master switch faulty	Check Switch	BE-69
Key-off power window does not operate	Door lock control relay faulty Wiring faulty	Check relay Repair as necessary	BE-72

Parts Inspection

1. INSPECT SWITCHES (Master Switch/Continuity)

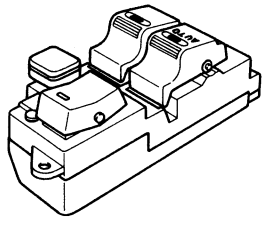

BE2877 S-10-2

Window operation		Driver's				Passenger's			
Terminal / Switch position		3	4	6	9	6	7	9	10
Window unlock	UP	○	○	○	○	○		○	○
	OFF	○	○	○		○	○		○
	DOWN	○		○	○	○		○	○
Window lock	UP	○	○	○	○			○	○
	OFF	○	○	○			○		○
	DOWN	○		○	○		○		

If continuity is not as specified, replace the switch.

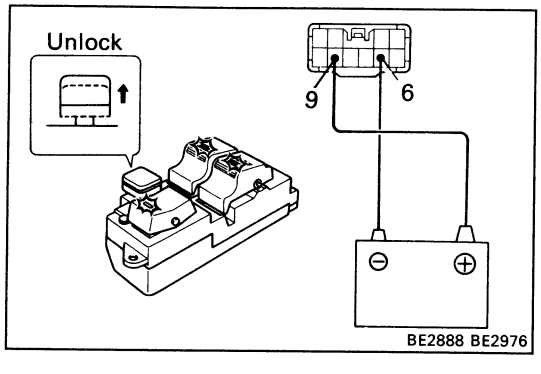

BE2888 BE2976

(Master Switch: Illumination)

(a) Set the window lock switch to the unlock position.

(b) Connect the positive (+) lead from the battery to terminal 9 and the negative (–) lead to terminal 6, check that all the illuminations light up.

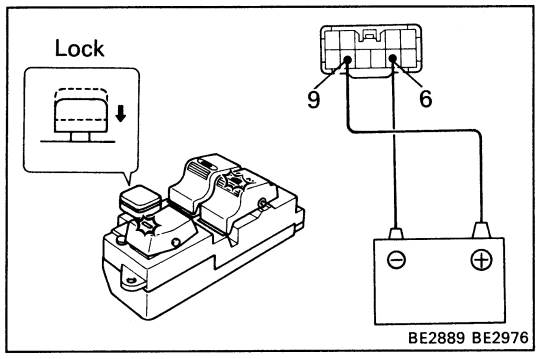

(c) Set the window lock switch to the lock position, check that the passenger's power window switch illumination goes out.

If operation is not as specified, replace the master switch.

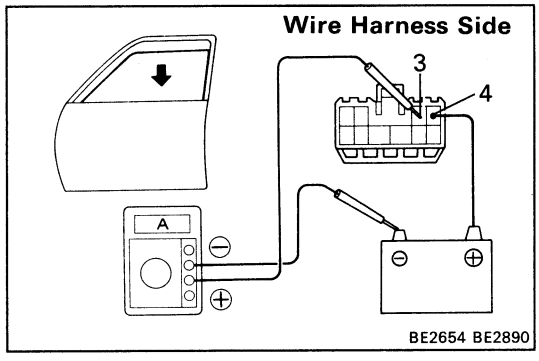

(Master Switch: One Touch Power Window System)

Inspection using an ammeter:

(a) Disconnect the connector from the master switch.

(b) Connect the positive (+) lead from the ammeter to terminal 3 on the wire harness side connector and the negative (–) lead to negative terminal of the battery.

(c) Connect the positive (+) lead from the battery to terminal 4 on the wire harness side connector.

(d) As the window goes down, check that the current flows approximately 7 amperes.

(e) Check that the current increases approximately 14.5 amperes or more when the window stops going down.

HINT: The circuit breaker opens some 4 – 40 seconds after the window stops going down, so that check must be made before the circuit breaker operates.

If operation is as specified, replace the master switch.

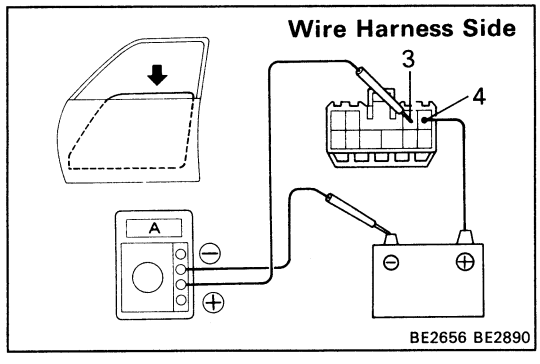

Inspection using an ammeter with a current-measuring probe:

(a) Remove the master switch with connector connected.

(b) Attach a current-measuring probe to terminal 3 of the wire harness.

(c) Turn the ignition switch ON and set the power window switch in the down position.

(d) As the window goes down, check that the current flows approximately 7 amperes.

(e) Check that the current increases approximately 14.5 amperes or more when the window stops going down.

HINT: The circuit breaker opens some 4 – 40 seconds after the window stops going down, so that check must be made before the circuit breaker operates.

If operation is as specified, replace the master switch.

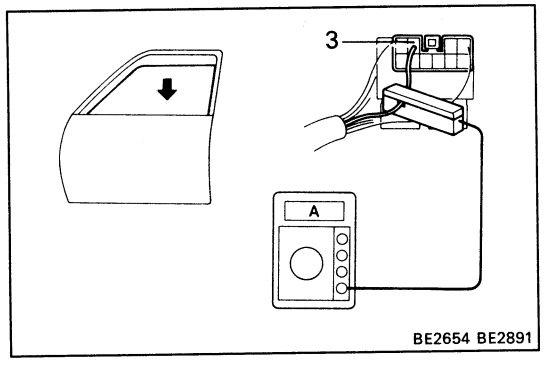

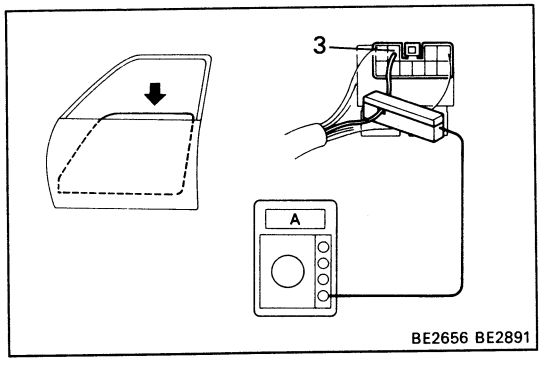

(Power Window Switch/Continuity)

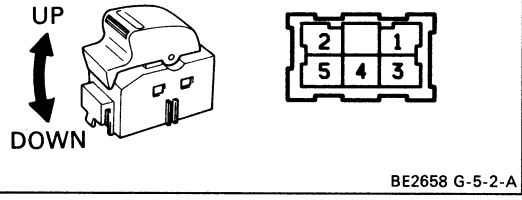

Switch position \ Terminal	1	2	3	4	5
UP	○				○
			○	○	
OFF	○	○	○	○	
DOWN	○	○		○	○

If continuity is not as specified, replace the switch.

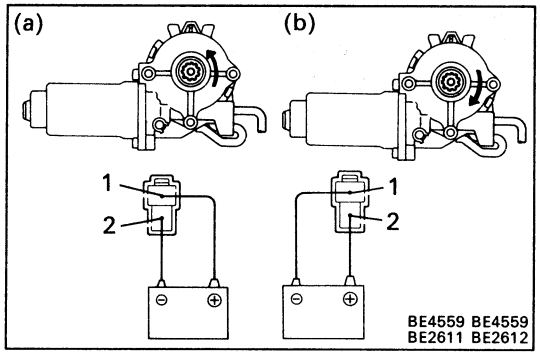

2. INSPECT POWER WINDOW MOTOR

(Left Side Door Motor/Motor Operation)

(a) Connect the positive (+) lead from the battery to terminal 1 and the negative (–) lead to terminal 2, check that the motor turns counterclockwise.

(b) Reverse the polarity, check that the motor turns clockwise.

If operation is not as specified, replace the motor.

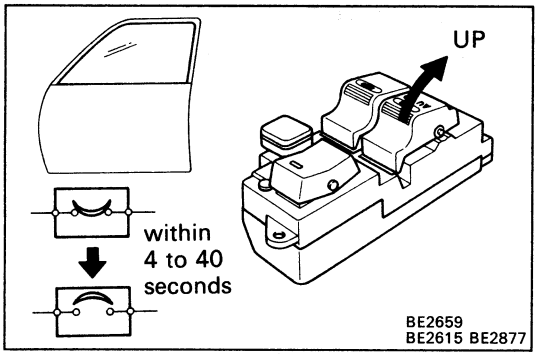

(Left Side Door Motor/Circuit Breaker Operation)

(a) With the window in the full closed position, hold the power window switch in "UP" position and check that there is a circuit breaker operation noise within 4 to 40 seconds.

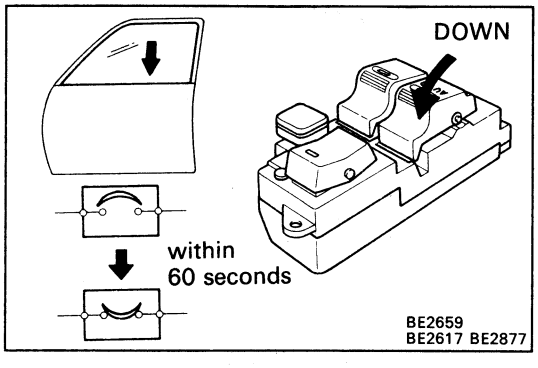

(b) With the window in the full closed position, hold the switch in "DOWN" and check that the window begins to descend within 60 seconds.

If operation is not as specified, replace the motor.

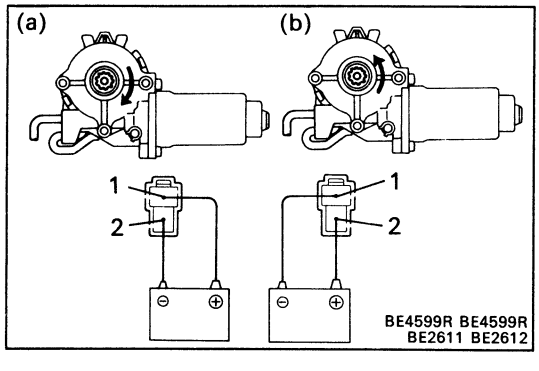

(Right Side Door Motor/Motor Operation)

(a) Connect the positive (+) lead from the battery to terminal 1 and the negative (–) lead to terminal 2, check that the motor turns clockwise.

(b) Reverse the polarity, check that the motor turns counterclockwise.

If operation is not as specified, replace the motor.

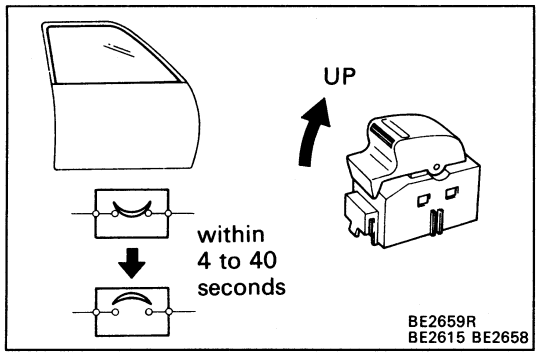

(Right Side Door Motor/Circuit Breaker Operation)

(a) With the window in the full closed position, hold the power window switch in "UP" position and check that there is a circuit breaker operation noise within 4 to 40 seconds.

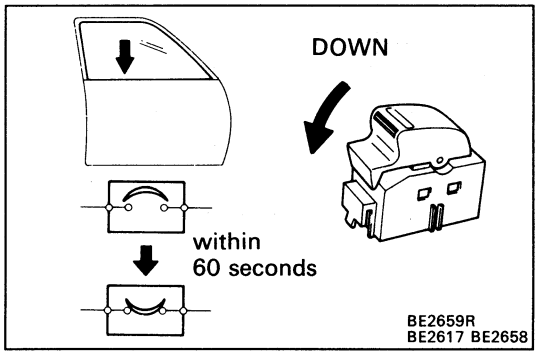

(b) With the window in the full closed position, hold the switch in "DOWN" and check that the window begins to descend within 60 seconds.

If operation is not as specified, replace the motor.

3. INSPECT DOOR LOCK CONTROL RELAY

See Step 3 of Power Door Lock Control System on page BE-78

4. INSPECT POWER MAIN RELAY

(Continuity)

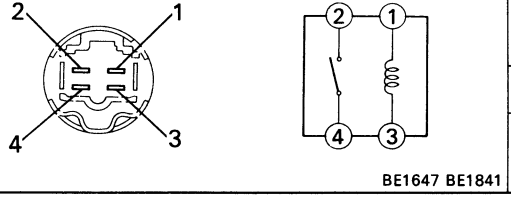

Terminal / Condition	1	2	3	4
Constant	○	∿	○	
Apply battery voltage to terminals 1 and 3.		○		○

If continuity is not as specified, replace the relay.

POWER DOOR LOCK CONTROL SYSTEM

Parts Location

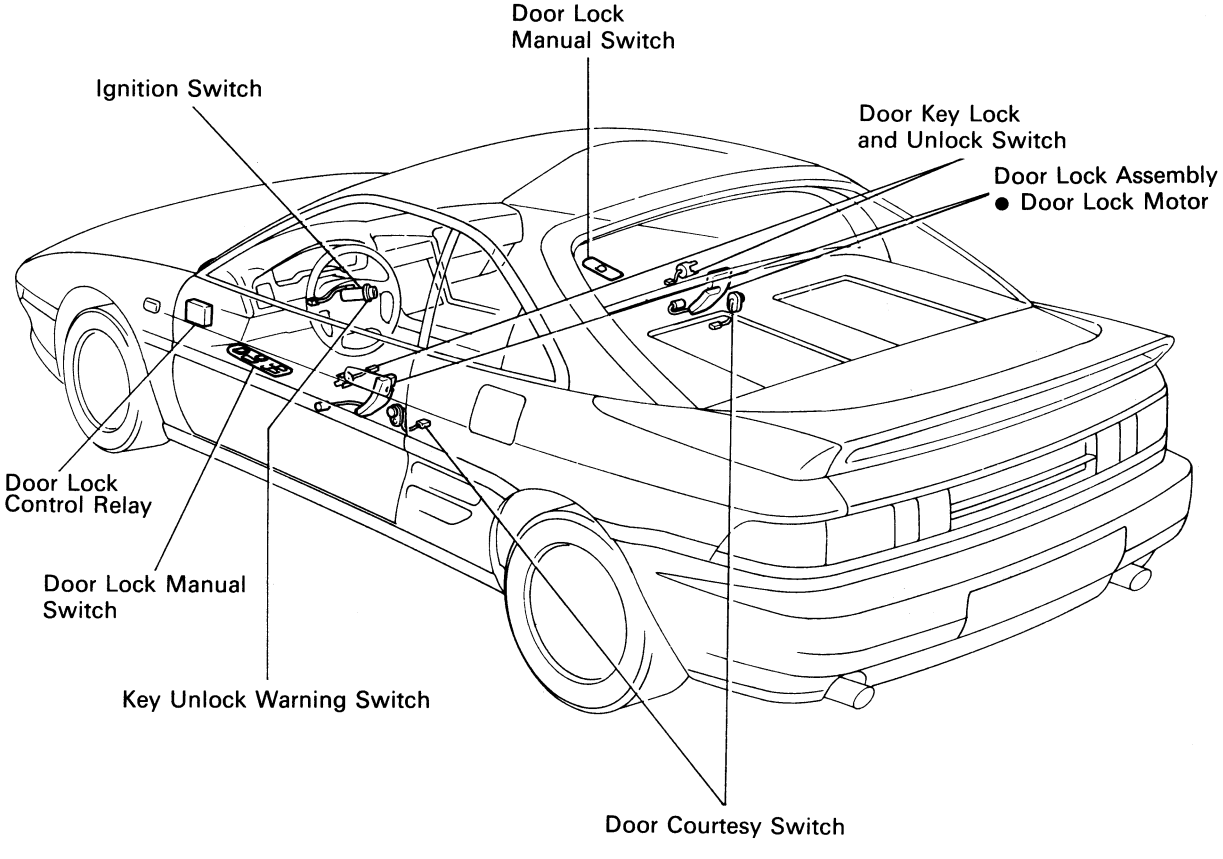

BE5241

Wiring and Connector Diagrams

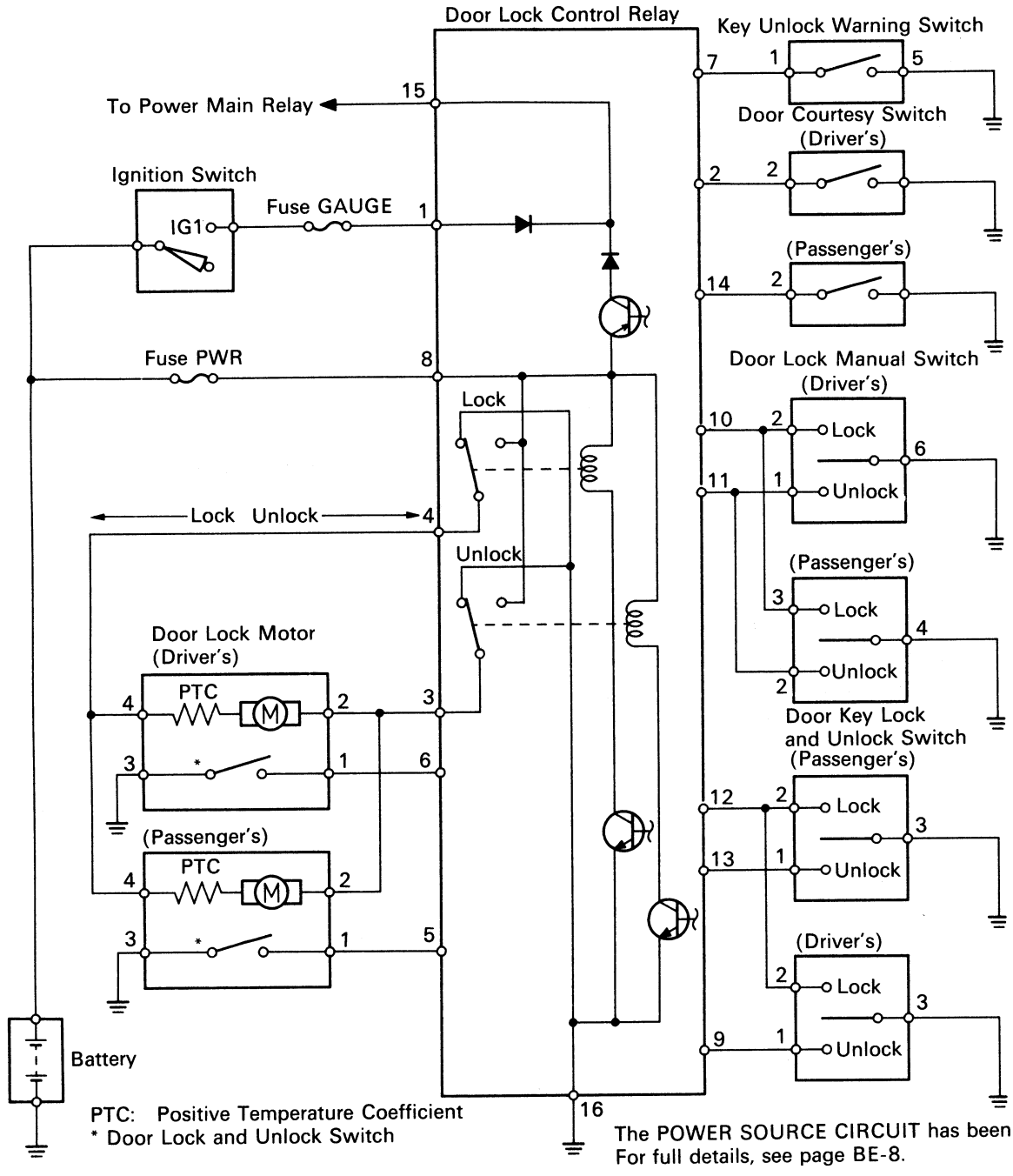

Door Lock Manual Switch (Driver's)

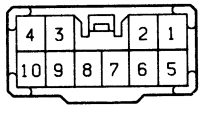

(Passenger's)

Door Key Lock and Unlock Switch

Key Unlock Warning Switch

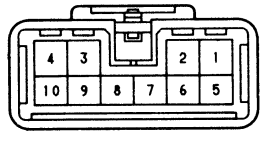

Door Courtesy Switch

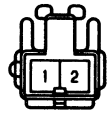

Door Lock Motor (w/o Theft Deterrent System)

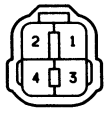

(w/Theft Deterrent System)

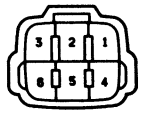

Door Lock Control Relay

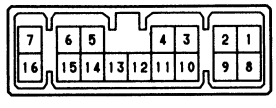

BE5242
S-10-2 S-4-2-C Ie-3-1 e-10-2-B e-2-1-G
IS-4-2-B IS-6-2-B S-16-2-A

Troubleshooting

Problem	Possible cause	Remedy	Page
Door lock system does not operate at all	POWER fuse blown Door lock motor faulty Door lock control relay faulty Wiring or ground faulty	Replace fuse and check for short Check motor Check relay Repair as necessary	BE-3 BE-76 BE-78
Door lock system does not operate by manual switch	Door lock manual switch faulty Door lock control relay faulty Wiring faulty	Check switch Check relay Repair as necessary	BE-75 BE-78
Door lock system does not operate by door key	Door key lock and unlock switch faulty Door lock control relay faulty Wiring faulty	Check switch Check relay Repair as necessary	BE-78 BE-78

Parts Inspection

1. INSPECT SWITCHES

(Driver's Door Lock Manual Switch: in Master Switch/Continuity)

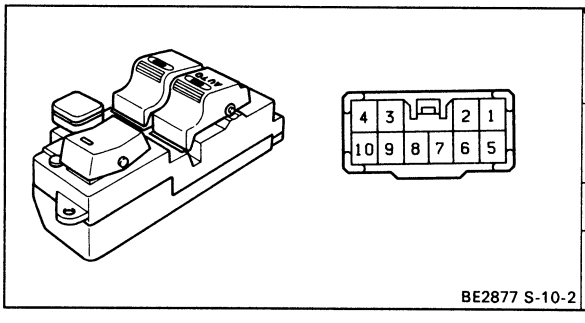

Terminal / Switch position	1	2	5	6
LOCK	○		○	
		○		○
OFF				
UNLOCK	○			○
		○	○	

(Passenger's Door Lock Manual Switch/Continuity)

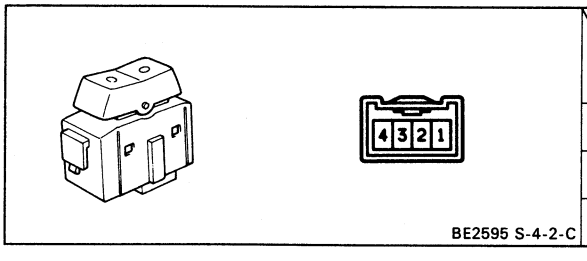

Terminal / Switch position	2	3	4
LOCK		○	○
OFF			
UNLOCK	○		○

(Door Key Lock and Unlock Switch/Continuity)

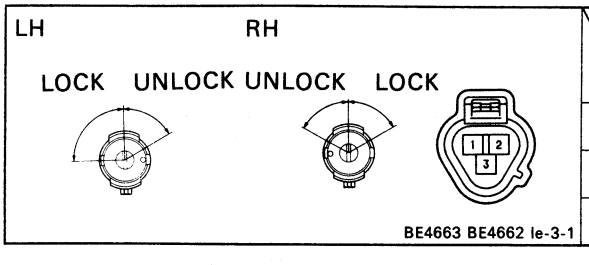

Terminal / Switch Position	1	2	3
LOCK		○	○
OFF			
UNLOCK	○		○

If continuity is not as specified, replace the switch.

(Key Unlock Warning Switch/Continuity)

See Step 1 of Key Confine Prevension System on page BE-11.

(Door Courtesy Switch/Continuity)

See Step 1 of Illuminated Entry System on page BE-41.

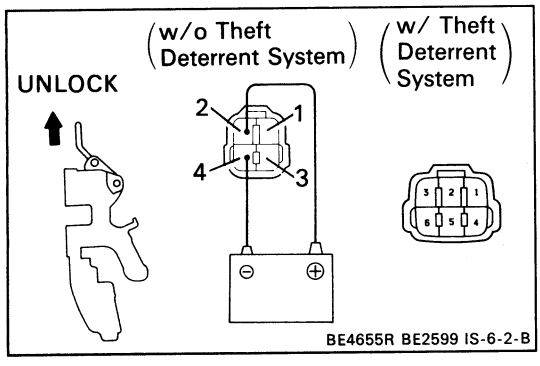

2. INSPECT DOOR LOCK MOTOR

(Motor Operation)

(a) Connect the positive (+) lead from the battery to terminal 2 (2) and the negative (–) lead to terminal 4 (5), check that the door lock link moves to UNLOCK position.

HINT: The number in brackets ( ) applies to vehicles w/ Theft Deterrent System.

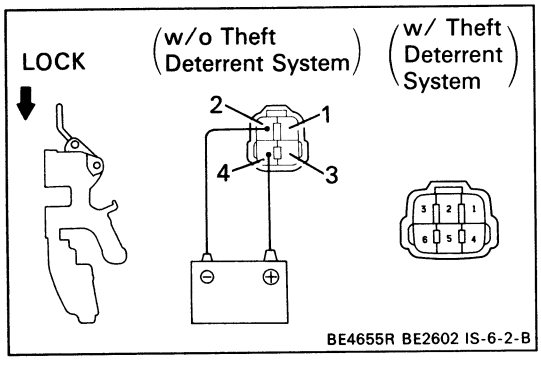

(b) Reverse the polarity, check that the door lock link moves to LOCK position.

If operation is not as specified, replace the door lock assembly.

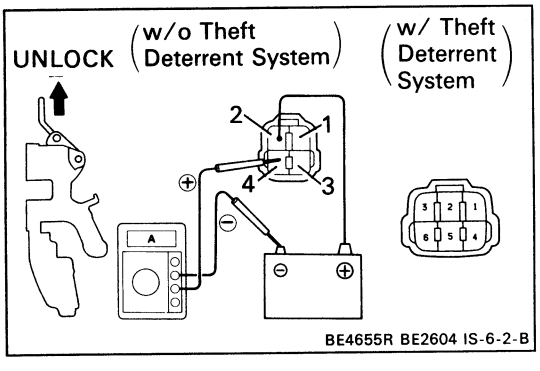

(PTC Thermistor Operation)

Inspection using an ammeter.

(a) Connect the positive (+) lead from the battery to terminal 2 (2).

(b) Connect the positive (+) lead from the ammeter to terminal 4 (5) and the negative (–) lead to battery negative (–) terminal, check that the current changes from approximately 3.2 ampere to less than 0.5 ampere within 10 to 60 seconds.

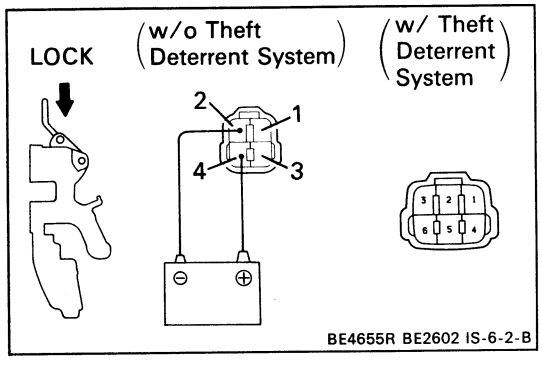

(c) Disconnect the leads from terminals.

(d) Approximately 60 seconds later, connect the positive (+) lead from the battery to terminal 4 (5) and the negative (–) lead to terminal 2 (2), check that the door lock moves to LOCK position.

HINT: The number in brackets ( ) applies to vehicles w/ Theft Deterrent System.

If operation is not as specified, replace the door lock assembly.

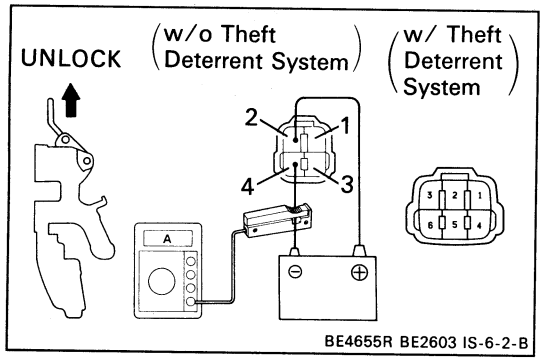

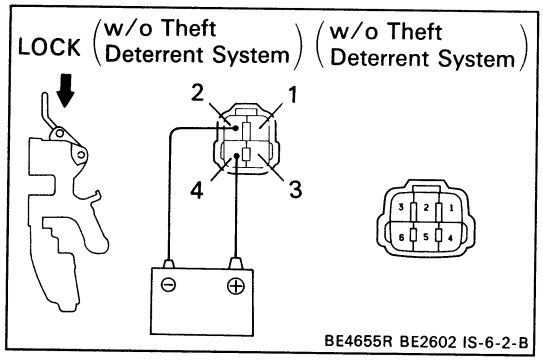

Inspection using an ammeter with a current-measuring probe.

(a) Connect the positive (+) lead from the battery to terminal 2 (2) and the negative (–) lead to terminal 4 (5).

(b) Attach a current-measuring probe to either the positive (+) lead or the negative (–) lead, check that the current changes from approximately 3.2 ampere to less than 0.5 ampere within 10 to 60 seconds.

HINT: The number in brackets ( ) applies to vehicles w/ Theft Deterrent System.

(c) Disconnect the leads from terminals.

(d) Approximately 60 seconds later, reverse the polarity, check that the door lock moves to LOCK position.

If operation is not as specified, replace the door lock assembly.

(Door Lock and Unlock Switch/Continuity)

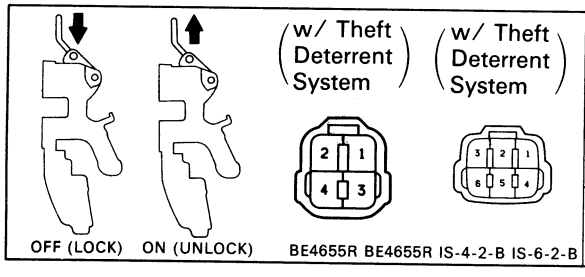

Terminal / Switch position	1 (1)	3 (4)
OFF (Door lock set to LOCK)		
ON (Door lock set to UNLOCK)	○	○

HINT: The number in brackets ( ) applies to vehicles w/ Theft Deterrent System.

If continuity is not as specified, replace the door lock assembly.

Wire Harness Side

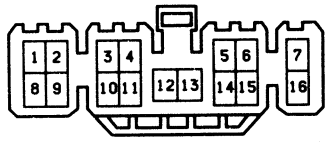

S-16-1-A

3. INSPECT DOOR LOCK CONTROL RELAY (Relay Circuit)

Disconnect the connector from the relay and inspect the connector on the wire harness side as shown in the chart.

Check for	Tester connection	Condition		Specified value
Continuity	2 – Ground	Driver's door courtesy switch position	OFF (Door closed)	No continuity
			ON (Door opened)	Continuity
	5 – Ground	Passenger's door lock and unlock switch position	OFF (Door locked)	No continuity
			ON (Door unlocked)	Continuity
	6 – Ground	Driver's door lock and unlock switch position	OFF (Door locked)	No continuity
			ON (Door unlocked)	Continuity
	7 – Ground	Key unlock warning switch position	OFF (Ignition key removed)	No continuity
			ON (Ignition key set)	Continuity
	9 – Ground	Driver's door key lock and unlock switch position	OFF or LOCK (Door key free or turned to lock)	No continuity
			UNLOCK (Door key turned to unlock)	Continuity
	10 – Ground	Door lock manual switch position	OFF or UNLOCK	No continuity
			LOCK	Continuity
	11 – Ground	Door lock manual switch position	OFF or LOCK	No continuity
			UNLOCK	Continuity
	12 – Ground	Door key lock and Unlock switch position	OFF or UNLOCK (Door key free or turned to unlock	No continuity
			LOCK (Door key turned to lock)	Continuity
	13 – Ground	Passenger's door key lock and unlock switch position	OFF or LOCK (Door key free or turned to lock)	No continuity
			UNLOCK (Door key turned to unlock)	Continuity
	14 – Ground	Passenger's door courtesy switch position	OFF (Door closed)	No continuity
			ON (Door opened)	Continuity
	16 – Ground	Constant		Continuity
Voltage	1 – Ground	Ignition switch position	LOCK or ACC	No voltage
			ON	Battery voltage
	8 – Ground	Constant		Battery voltage
Resistance	15 – Ground	Constant		Approx. 60Ω

If circuit is as specified, inspect the door lock signal.

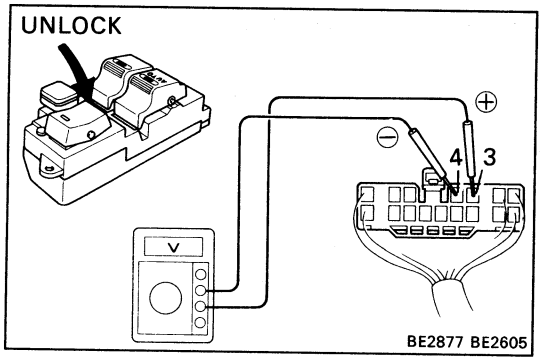

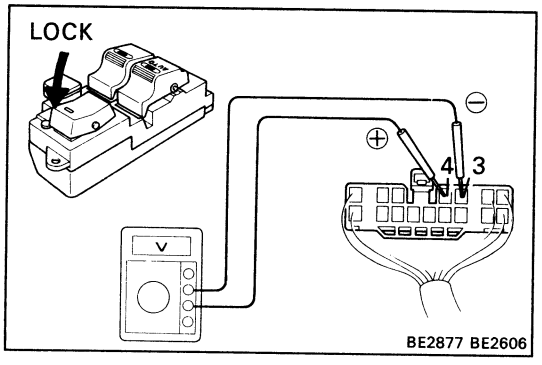

(Door Lock Signal)

HINT: When the relay circuit is as specified, inspect the door lock signal.

(a) Connect the connector to the relay.

(b) Connect the positive (+) lead from the voltmeter to terminal 3 and the negative (–) lead to terminal 4.

(c) Set the door lock manual switch to UNLOCK, check that the voltage rises from 0 volts to battery voltage for approximately 0.2 seconds.

(d) Reverse the polarity of the voltmeter leads.

(e) Set the door lock manual switch to LOCK, check that the voltage rises from 0 volts to battery voltage for approximately 0.2 seconds.

If operation is not as specified, replace the relay.

POWER MIRROR CONTROL SYSTEM

Parts Location

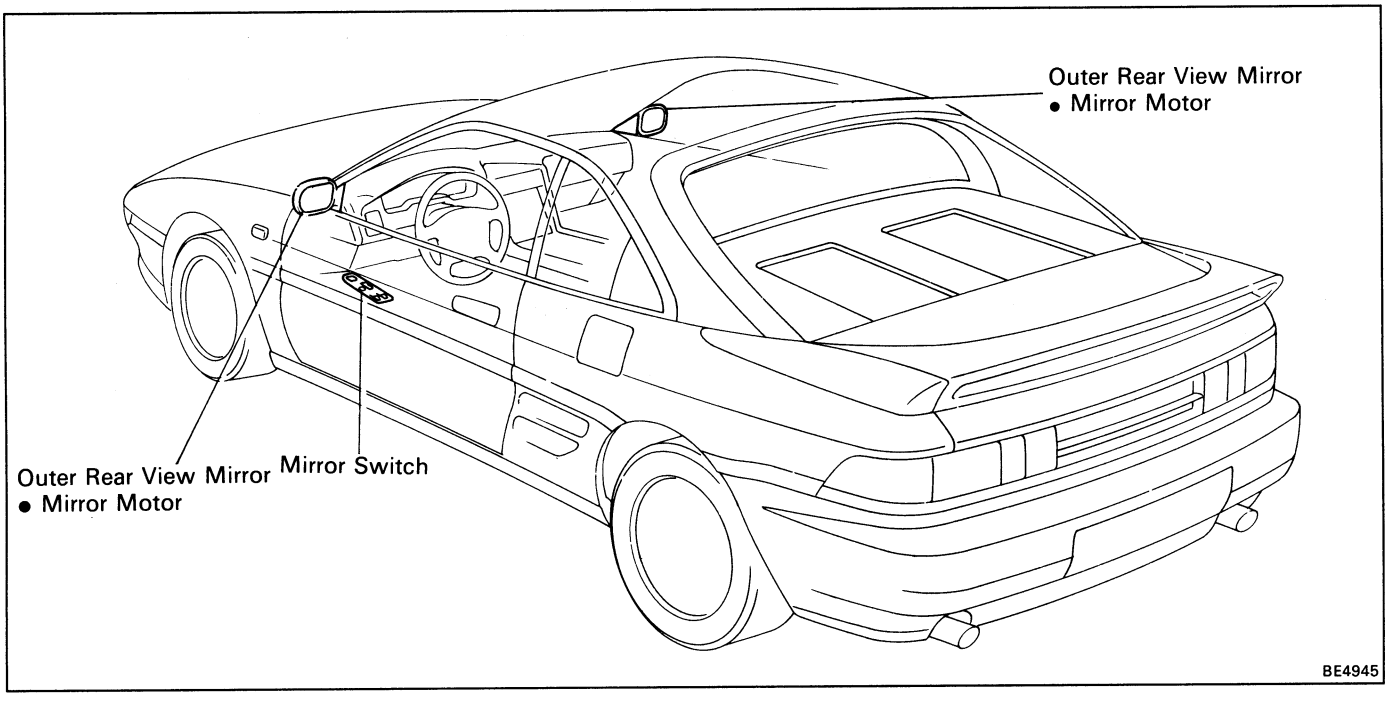

Wiring and Connector Diagrams

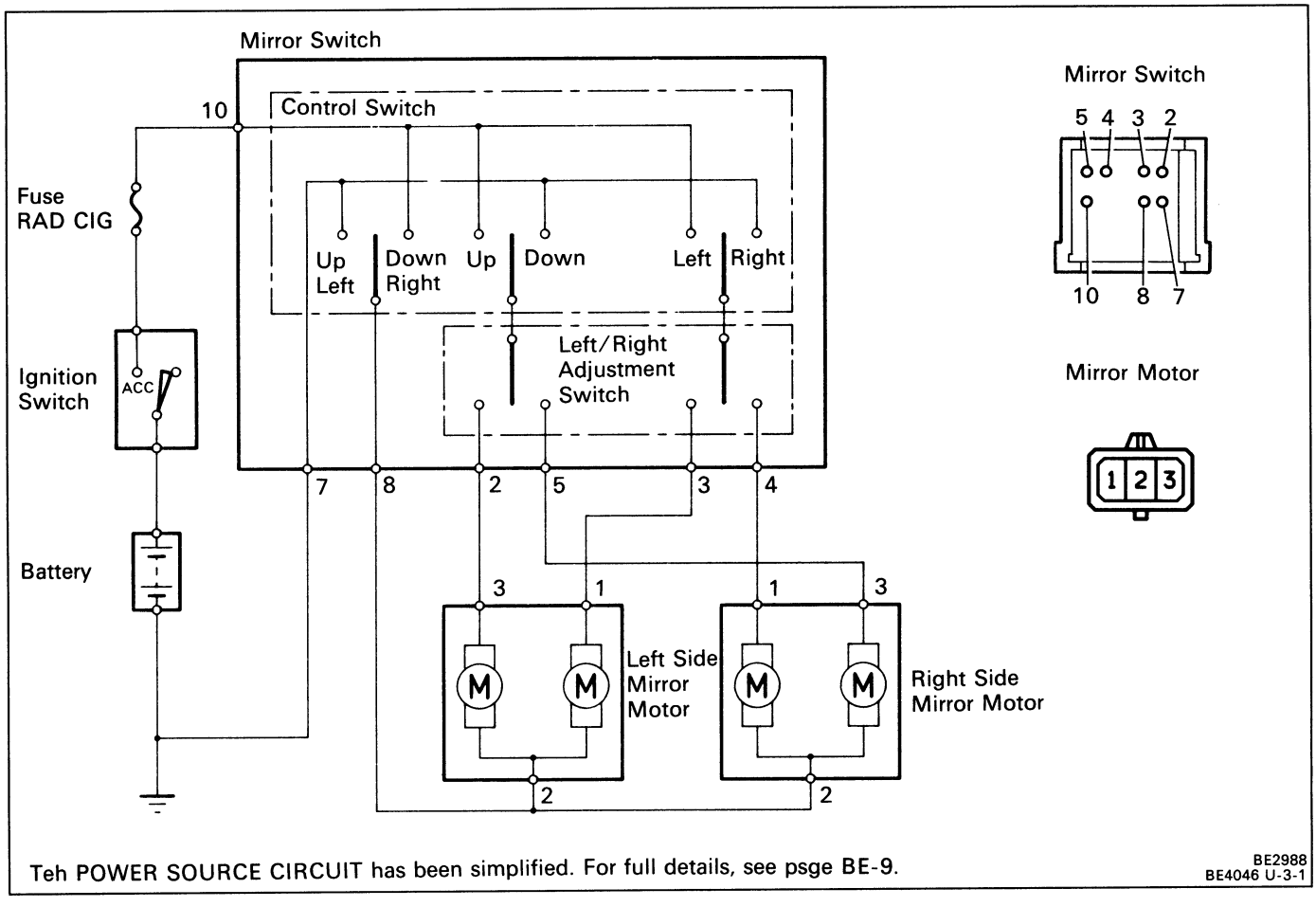

Troubleshooting

Problem	Possible cause	Remedy	Page
Remote control mirror system does not operate	RAD CIG fuse faulty Mirror switch faulty Mirror motor faulty Wiring or ground faulty	Replace fuse and check for short Check switch Check motor Repair as necessary	BE-3 BE-81 BE-81

Parts Inspection

1. INSPECT MIRROR SWITCH (Continuity)

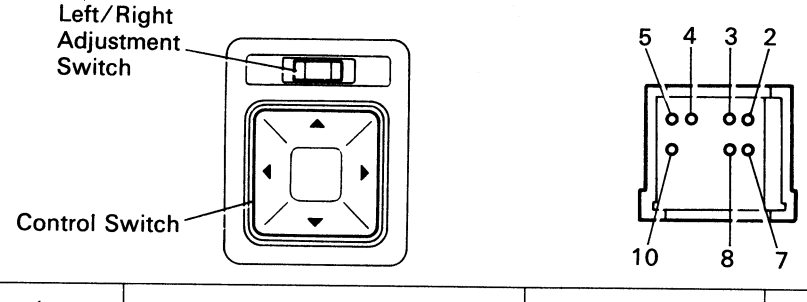

BE4657 BE2989

Left/Right adjustment switch position	LEFT SIDE					OFF			RIGHT SIDE				
Terminal / Control switch position	2	3	7	8	10	7	8	10	4	5	7	8	10
OFF													
UP	○				○	○	○			○			○
			○	○							○	○	
DOWN	○			○	○		○	○		○	○	○	○
LEFT		○			○	○	○		○				○
			○	○							○	○	
RIGHT		○	○	○	○		○	○	○		○	○	○

If continuity is not as specified, replace the switch.

2. INSPECT MIRROR MOTOR

Connect the positive (+) lead from the battery to terminal is column "A" and the negative (–) lead to terminal in column "B", check that the mirror operates in column "C".

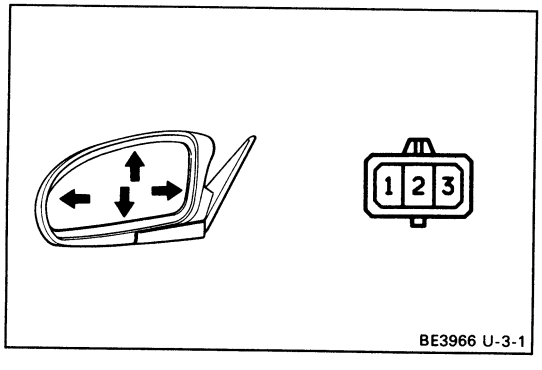

BE3966 U-3-1

A (+)	B (–)	C (Operation)
3	2	Mirror turns upward
2	3	Mirror turns downward
1	2	Mirror turns to left side
2	1	Mirror turns to right side

If operation is not as specified, replace the mirror assembly.

CRUISE CONTROL SYSTEM

Parts Location

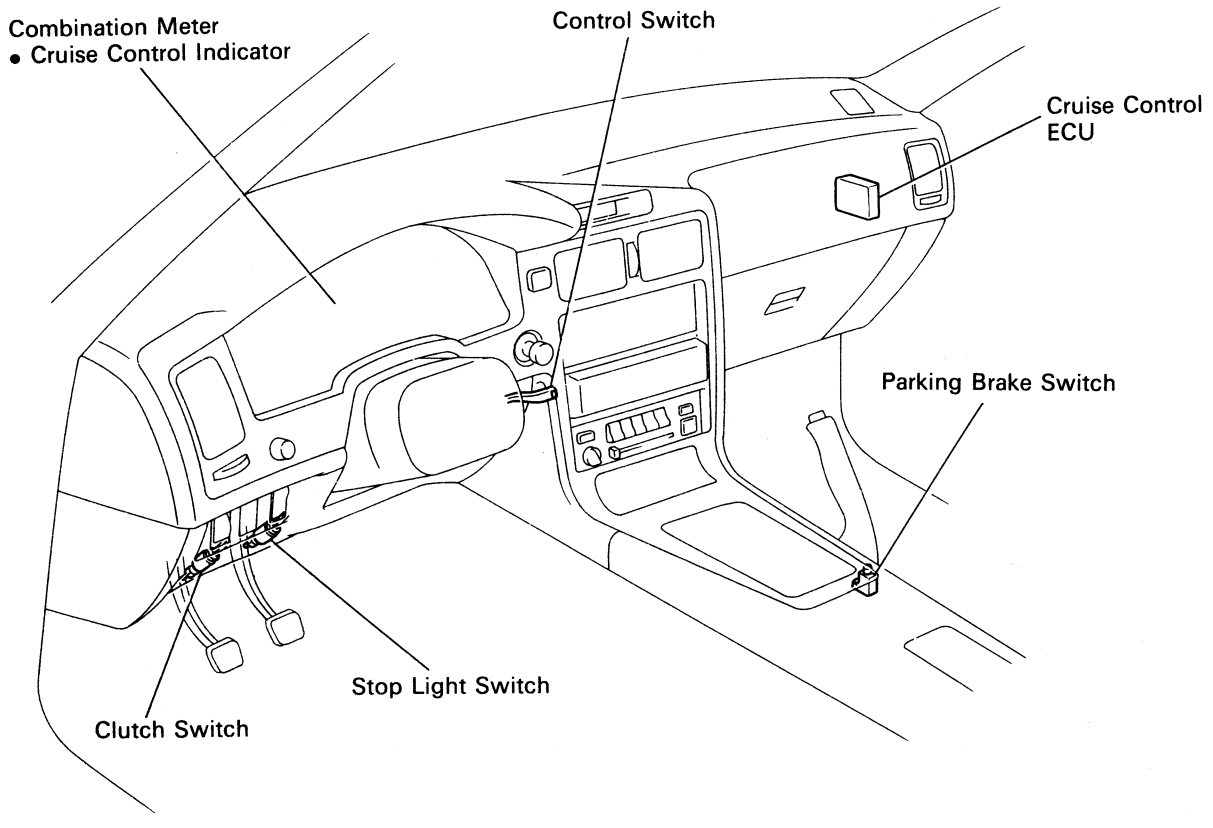

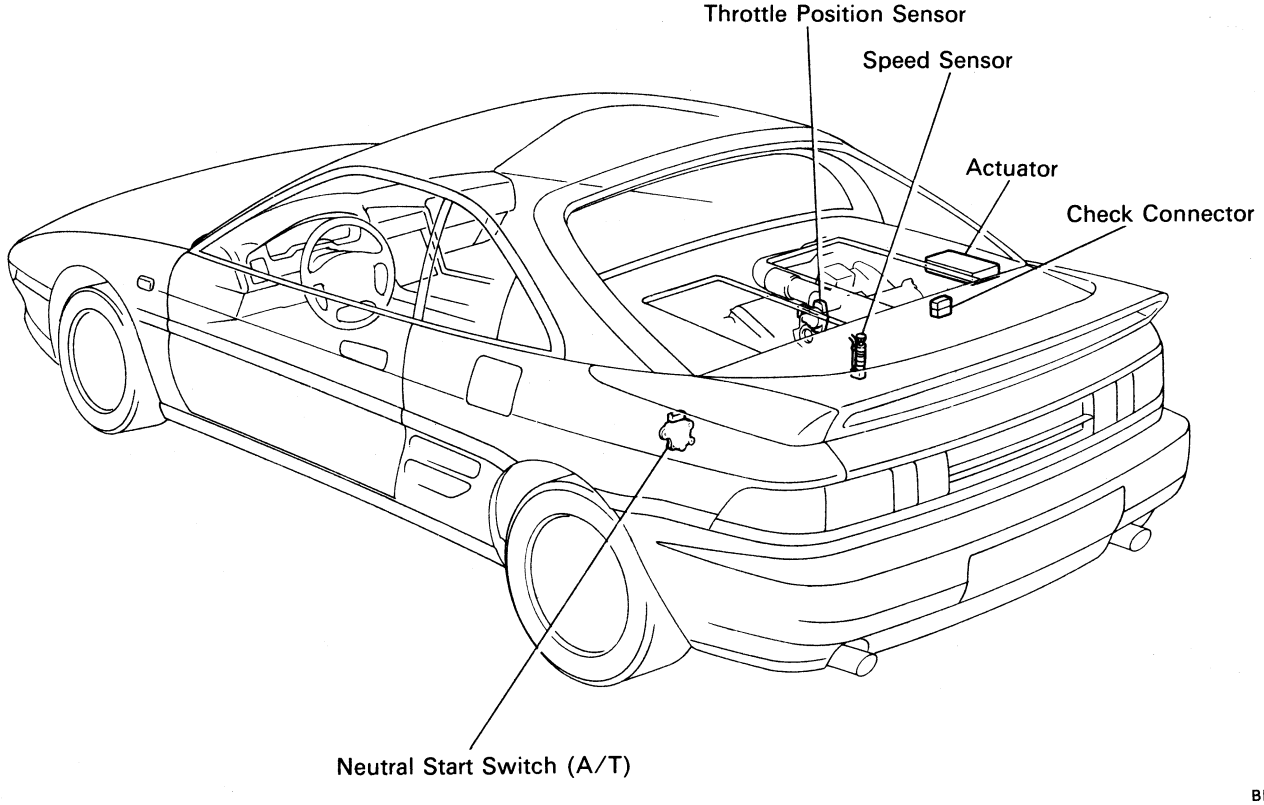

BE5243
BE4947

Wiring Diagram

(USA)

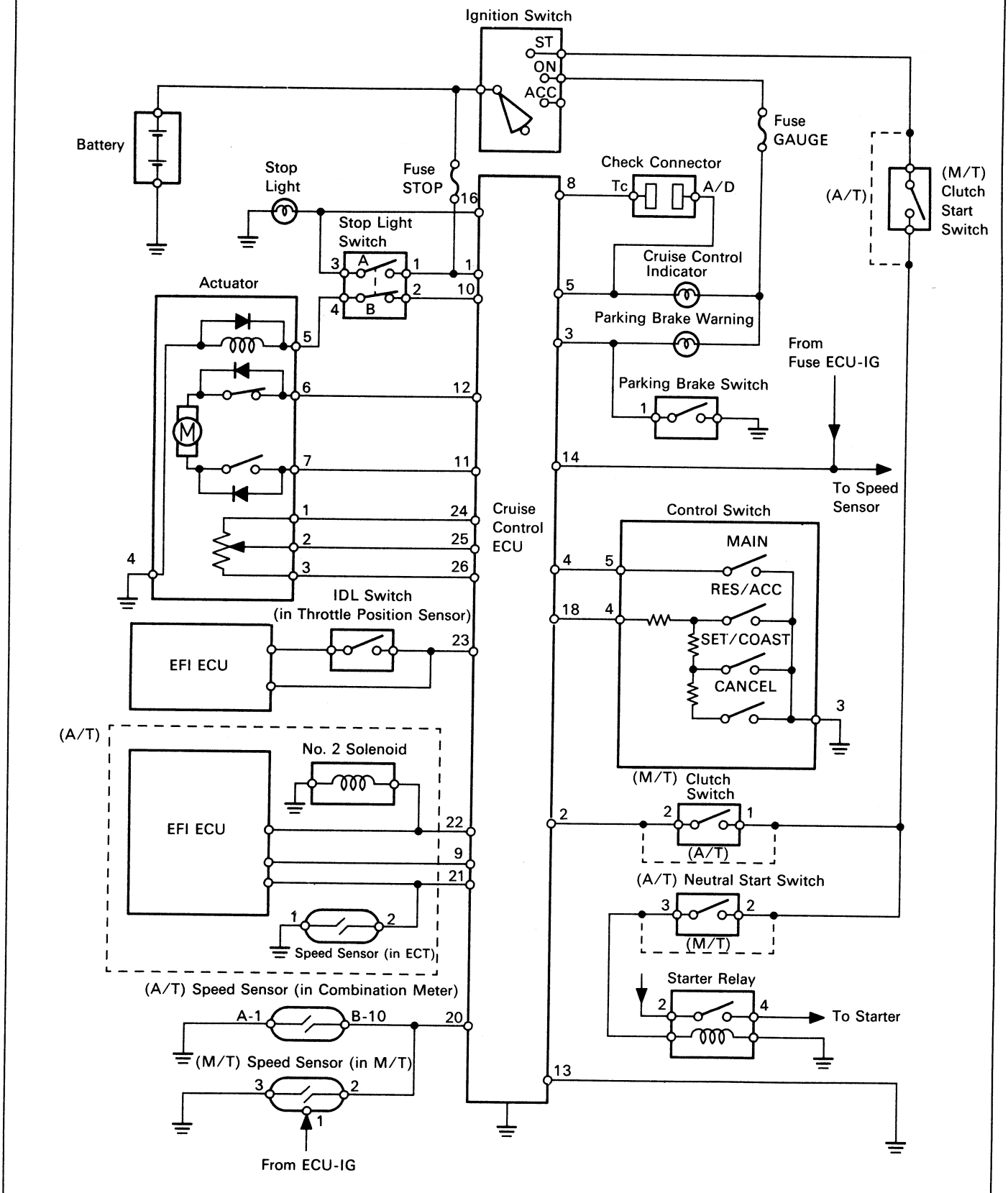

The POWER SOURCE CIRCUIT has been simplified. For full details, see page BE-9.

BE5244

(CANADA)

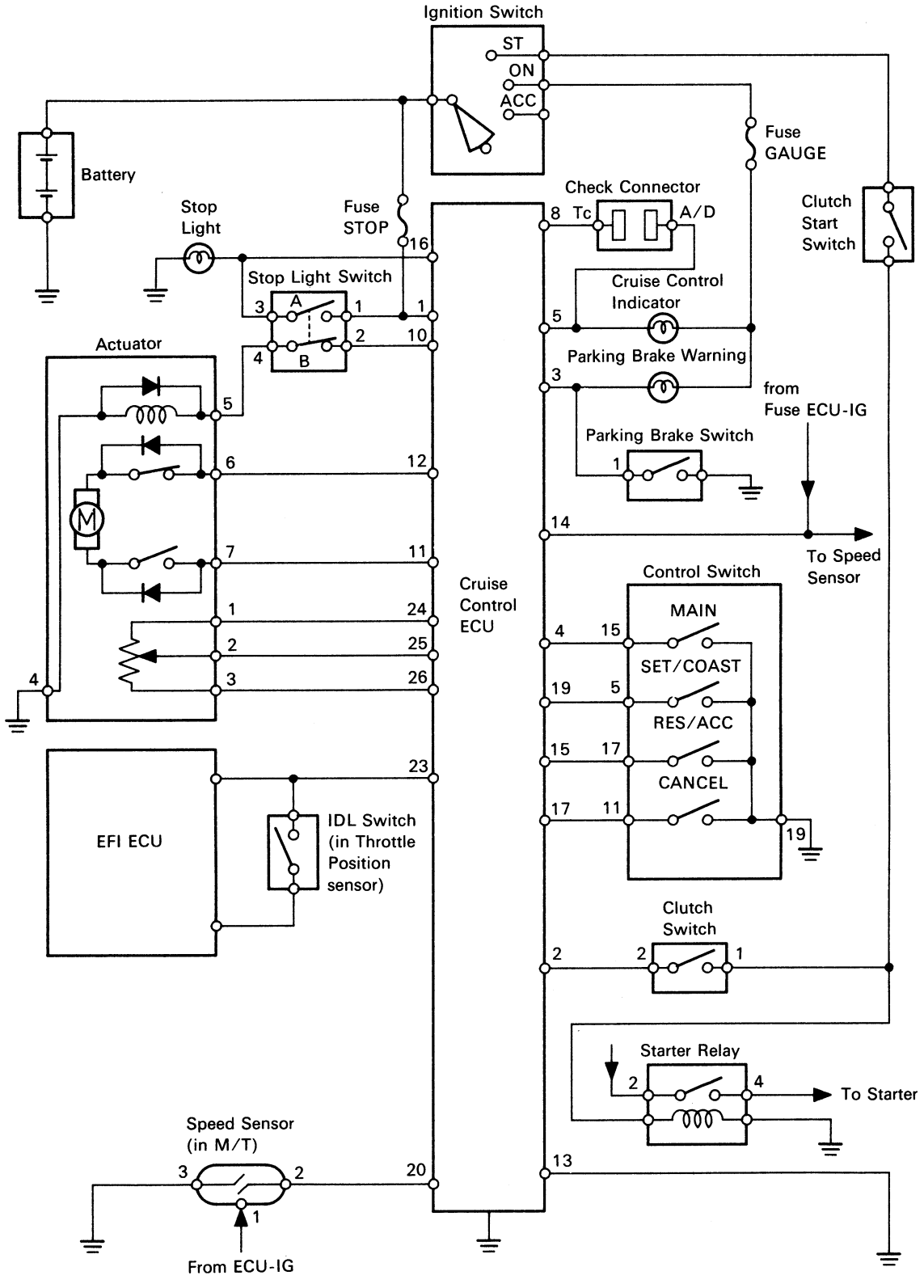

The POWER SOURCE CIRCUIT has been simplified. For full details, see page BE-9.

BE5245

Connector Diagrams

Cruise Control Switch

(USA)

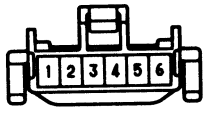

(CANADA)

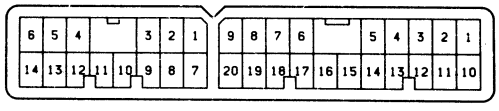

Connector "A" Connector "B"

Stop Light Switch

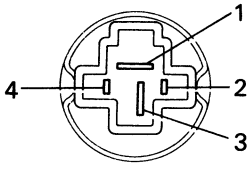

Clutch Switch (M/T)

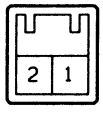

Parking Brake Switch

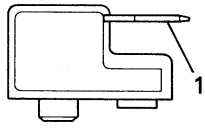

Neutral Start Switch (A/T)

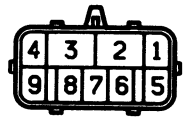

Cruise Control ECU

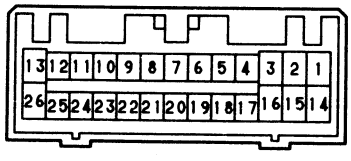

Actuator

Starter Relay

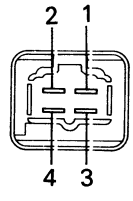

Throttle Position Sensor

(3-pin Type)

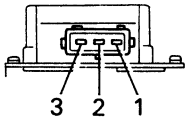

(4-Pin Type)

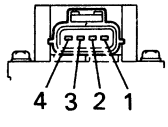

Speed Sensor

(M/T)

(A/T: Combination Meter)

Connector "A"

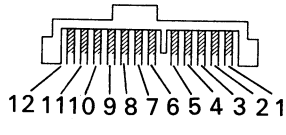

Connector "B"

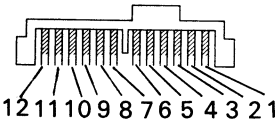

Speed Sensor

(A/T: ECT)

e-6-1-C V-34-2
BE0336 G-2-2 BE1412 SH-9-2-A
Vd-26-2-B Ie-7-2 ST0280
AC2241 IS-3-2-A BE1266 BE1267
IS-2-2-B

System Description

- When the ignition switch is turned ON, current flows from the battery to terminal 14 of the cruise control (CC) ECU.
- Terminal 13 of the CC ECU is always grounded.

Basic Operation

HINT: For all explanations below, the ignition switch is in the ON position.

1. CONTROL SWITCH OPERATION

- The CC switch controls MAIN switch, SET/COAST, RESUME/ACCEL and CANCEL functions.

(USA)

(a) MAIN switch
When the main switch is pushed ON, current flows from terminal 4 of the CC ECU → terminal 5 of the control switch → terminal 3 of the switch → ground.

As a result, the CC ECU is on standby and terminal 5 of the CC ECU is grounded. Therefore the CC indicator lights up.

(b) SET/COAST, RESUME/ACCEL and CANCEL switch
The control switch controls the SET, COAST, RESUME, ACCEL and CANCEL functions. When the control switch is turned to each position, current flows from terminal 18 of the CC ECU → terminal 4 of the control switch → (each resistance) → terminal 3 of the switch → ground.

In the way, the CC ECU detects each position the control switch is turned to, and starts operation.

HINT: The SET function is detected by the CC ECU when the control switch released from SET/COAST.

(CANADA)

(a) MAIN switch
When the main switch is pushed ON, current flows from terminal 4 of the CC ECU → terminal 15 of the control switch → terminal 19 of the switch → ground.

As a result, the CC ECU is on standby and terminal 5 of the CC ECU is grounded. Therefore the CC indicator lights up.

(b) SET/COAST switch
When the control switch is turned to SET/COAST position, the current flows from terminal 19 of the CC ECU → terminal 5 of the CC switch → terminal 19 of the CC switch → ground.

(c) RESUME/ACCEL switch
When the control switch is turned to RES/ACC position, the current flows from terminal 18 of the CC ECU → terminal 17 of the CC switch → terminal 19 of the CC switch → ground.

(d) CANCEL switch
When the control switch is turned to CANCEL position, the current flows from terminal 17 of the CC ECU → terminal 11 of the CC switch → terminal 19 of the CC switch → ground.

2. SPEED CONTROL OPERATION

When the vehicle speed is set by the control switch, the ECU sends signal from terminal 10 → terminal 2 of the stop light switch → terminal 4 of the switch → terminal 5 of the actuator → (safety magnetic clutch) → terminal 4 of the actuator → ground.

When the actual vehicle speed drops below the set speed, the CC ECU sends a signal (voltage) from terminal 12 → terminal 6 of actuator → (motor) → terminal 7 of actuator → terminal 11 of CC ECU. This causes the motor to rotate the actuator arm in the throttle opening direction, increasing the vehicle speed. Then, when the arm reaches the prescribed angle, the CC ECU detects this at terminal 25 and stops the signal from 12.

When the actual vehicle speed rises above the set speed, the CC ECU sends a signal from terminal 11, turning the motor in the opposite direction so that the vehicle speed is reduced.

The CC ECU sends approx. 5 V from terminal 24 → terminal 1 of the actuator → (position sensor) → terminal 3 of the actuator → terminal 26 of the CC ECU. When the occurs, the position sensor sends the position of the actuator arm as a signal (voltage) from terminal 2 of the actuator to terminal 25 of the CC ECU.

3. MANUAL CANCEL OPERATION

The CC system has the following methods of cancellation:

- **Speed Control Switch (CANCEL)**

  When the control switch is turned to CANCEL position.

- **Parking Brake Switch**

  When the parking brake lever is pulled, the parking brake switch is turned ON and sends a cancellation signal (ground voltage) to terminal 3 of the CC ECU.

- **Neutral Start Switch (A/T)**

  When the shift lever is set to "N" or "P" range, the neutral start switch is turned ON and sends a cancellation signal (ground voltage) to terminal 2 of the CC ECU.

- **Clutch Switch (M/T)**

  When the clutch pedal is depressed, the clutch switch is turned ON and sends a cancellation signal (ground voltage) to terminal 2 of the CC ECU.

- **Stop Light Switch**

  When the brake pedal is depressed, SW B of the stop light switch is turned OFF, the safety magnetic clutch (in actuator) is released, and SW A of the stop light switch is turned ON and sends a cancellation signal (battery voltage) to terminal 16 of the CC ECU.

When the CC ECU detects any of the above signals, it stops output of signals to the actuator, and cancels cruise control.

cc: Cruise Control

Diagnosis System

Output of Diagnostic Code

READ DIAGNOSTIC CODE

(Type A)

(a) Turn the ignition switch on.

(b) Turn the control switch to SET/COAST position, and keep it there.

(c) Push the MAIN switch ON.

(d) Check that the indicator light "CRUISE" lights-up in the combination meter.

(e) Turn the SET/COAST switch off.

(f) Meet the conditions listed in the table below.

(g) Read the diagnosis code on the cruise control indicator light.

No.	Conditions	Indication code	Diagnosis
1	Turn the control switch to SET/COAST position.	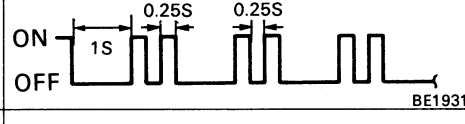	SET/COAST circuit is normal.
2	Turn the control switch to RES/ACC position.	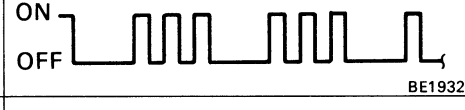	RES/ACC circuit is normal.
3	Each cancel switch is turned ON. ● Control switch (to CANCEL) ● Stop light switch ● Parking brake switch ● Clutch Switch (M/T) ● Neutral Start Switch (A/T)	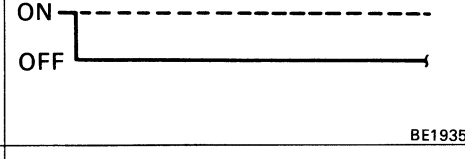	Each cancel switch is normal.
4	Drive at approx. 40 km/h (25 mph) or below.	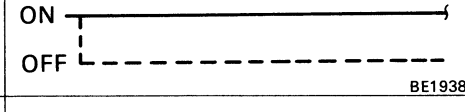	Speed sensor circuit is normal.
	Drive at approx. 40 km/h (25 mph) or over	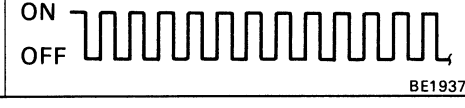	Speed sensor circuit is normal.

HINT:

- Indication codes appear in order from No. 1.
- If there is no indication code, perform troubleshooting and inspection. (See page BE-90)
- Indication is stopped when the MAIN switch is re-pushed.

Diagnosis Check Connector

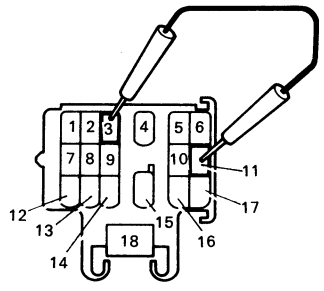

(Type B)

(a) If while driving with the cruise control on, the system is canceled by a malfunction in either the actuator, speed sensor or speed control switch circuit, the cruise control indicator light "CRUISE" will blink 5 times.

(b) While stopped, connect terminals 3 and 11 of the check connector.

HINT: If the ignition switch is turned off, the diagnostic code will be erased from the computer memory.

(c) Read the diagnostic code on the indicator light "CRUISE".

	Indication code	Diagnosis
	BE1939	Normal
11	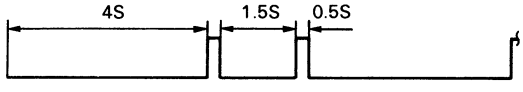 BE1940	Excessive current flowed to motor or safety magnetic clutch drive circuit.
12	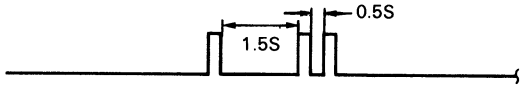 BE2711	Open circuit in safety magnetic clutch circuit.
13	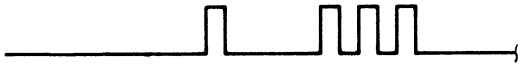 BE4344	● Position sensor circuit abnormal. ● Open circuit in motor.
21	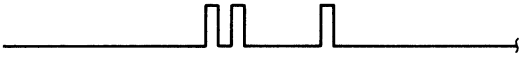 BE1941	Vehicle speed signal not sent for 140 msec. or longer
22	BE1942	(A/T) Speed sensor (in ECT) circuit is abnormal.
23	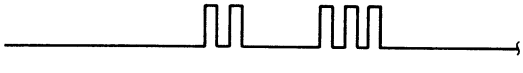 BE1943	* Vehicle speed has decreased by 16 km/h (10 mph) or more from the set speed during cruising.
31	BE1944	(CANADA) RESUME/ACCEL switch is ON always when MAIN switch is pushed ON.
32	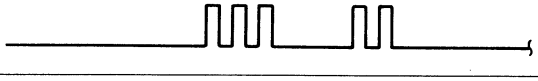 BE1945	(USA) Short circuit in control switch circuit.
33	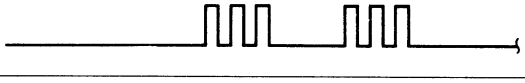 BE2712	(CANADA) SET/COAST switch signal and RES/ACC switch signal turned on simultaneously.
34	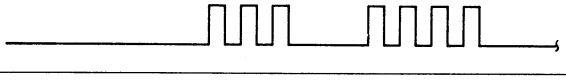 BE4342	(USA) Control switch does not turn off before switching.
41	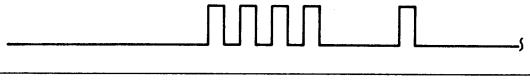 BE4345	ECU malfunction.

* If the set speed can be maintained when the speed control switch is again set at SET/COAST, there is no malfunction.

HINT:

- Indication codes appear in order from No. 11.
- If there is no indication code, perform troubleshooting and inspection. (See page BE-90).

Troubleshooting

You will find the source of the trouble more easily be properly using the table shown below. In this table, the numbers indicate the order of priority of the causes of trouble. Check each part in the order shown.

Chart No.					H	*1	*2	L	N,O	M	*3	P	Q		
Inspection Item / Diagnosis Code / Problem	Type B	Type A		CC ECU	Actuator	Main Switch (in Control Switch)	Control Switch	Stop light Switch	Clutch Switch or Neutral Start Switch	Parking Brake Switch	Speed Sensor, or Speedometer Cable	ECT Solenoid No. 2 Circuit	Throttle Position Sensor (IDL)	Speed Control Cable Function	Wire Harness
● "CRUISE" Indicator light blinks 5 times. ● Cruise control system does not set. ● Cruise control system does not operate.	11			3	2										1
	12			4	2			3							1
	13			3	2										1
	21			3							2				1
	22			2							1				
	23			4	3						2			1	
	31			3			2								1
	32			2			1								
	33			3			2								1
	34			2			1								
	41			1											
	Normal	4	OK	9	8	2	3	4	5	6				7	1
			NG	2							7				
Set speed deviates on high or low side.				4	3						1			2	
Large speed drop when the speed control switch turned to SET.				4	3								2	1	
Vehicle speed fluctuates when speed control switch turned to SET.				4	3						1			2	
Acceleration response is sluggish when speed control switch turned to "ACCEL" or "RESUME"				4	3						2			1	
During autodrive operation, shift operation ocuurs frequently without control				2								1			
Set speed does not cancel when brake pedal depressed.	3	OK		1											
		NG		2				1							
Set speed does not cancel when parking brake lever pulled	3	OK		1											
		NG		2						1					
Set speed does not cancel when clutch pedal depressed.	3	OK		1											
		NG		2					1						
Set speed does not cancel when speed control switch turned to CANCEL.	3	OK		1											
		NG		2			1								
Vehicle speed does not decrease when speed control switch turned to COAST.	1	OK		4	1						3			2	
		NG		2			1								
Vehicle speed does not accelerate when speed control switch turned to ACCEL.	2	OK		4	1						3			2	
		NG		2			1								
Vehicle speed does not return to memorized speed when control switch turned on RESUME	2	OK		4	1						3			2	
		NG		2			1								
Speed can be set below about 40 km/h (25 mph.)	4	OK		1											
		NG		2							1				
Cruise control will not disengage even at about 40 km/h (25 mph).	4	OK		1											
		NG		3							1			2	

*1 USA : C
CANADA : D
*2 USA : C
CANADA : E,F,G
*3 M/T : I
A/T : J, K

A POWER SOURCE CIRCUIT

HINT: While carrying out the following inspection, make certain that the connectors and terminals are properly connected.

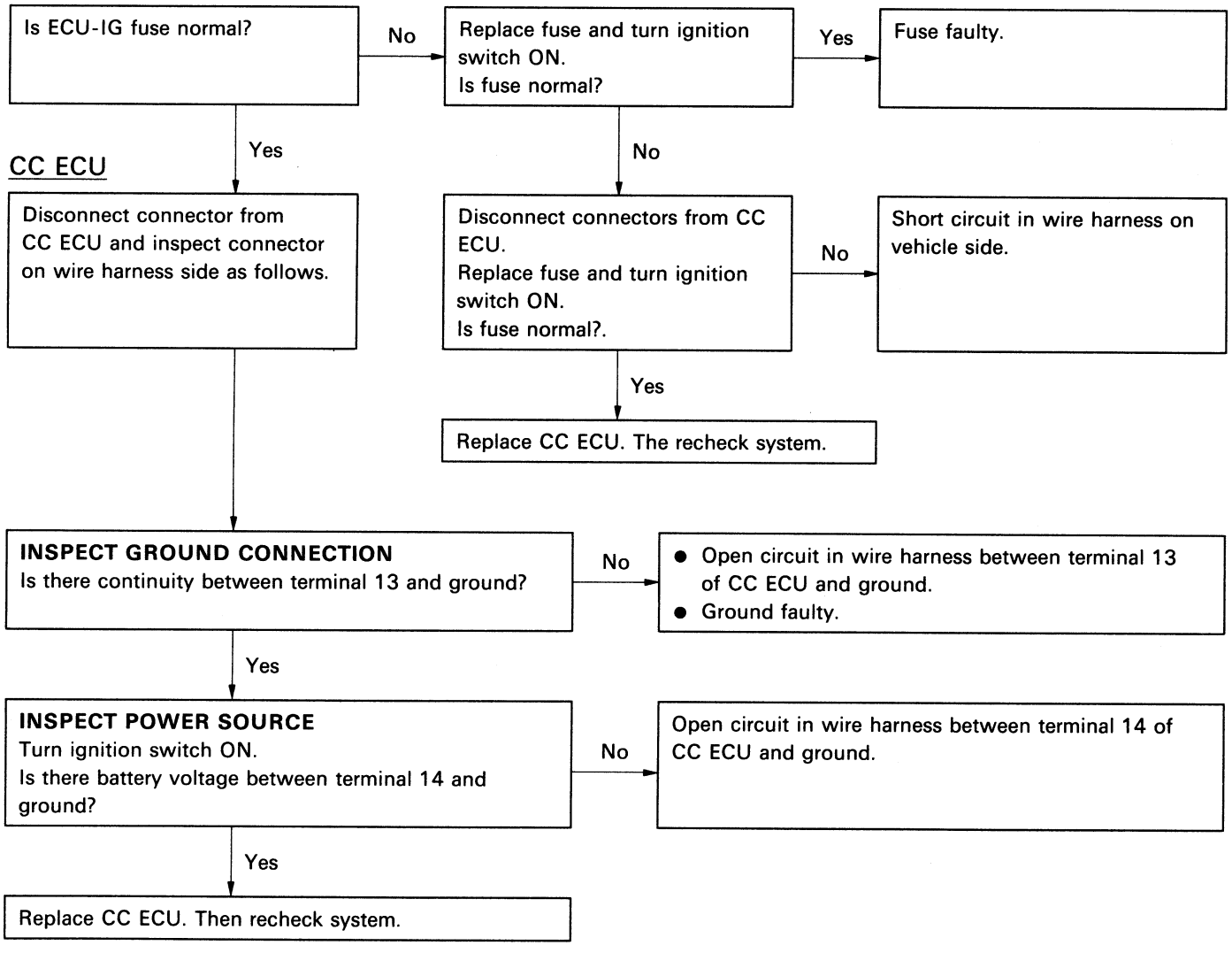

CC: Cruise Control

B CRUISE CONTROL INDICATOR CIRCUIT

HINT: While carrying out the following inspection, make certain that the connectors and terminals are properly connected.

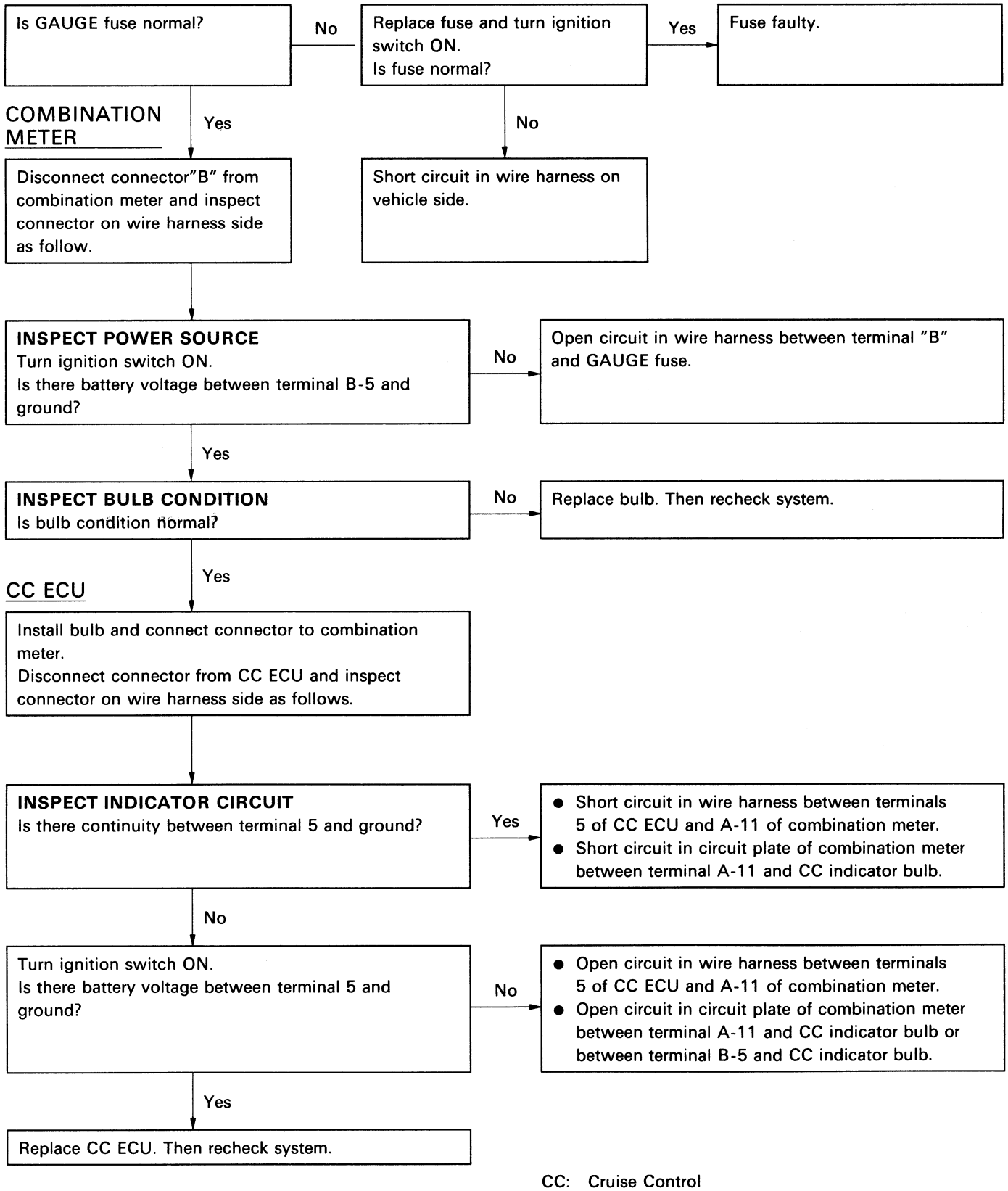

CC: Cruise Control

C CONTROL SWITCH CIRCUIT (USA)

HINT: While carrying out the following inspection, make certain that the connectors and terminals are properly connected.

CONTROL SWITCH

Disconnect connector from control switch and inspect connector on wire harness side as follows.

↓

INSPECT GROUND CONNECTION
Is there continuity between terminal 3 and ground?

No → ● Open circuit in wire harness between terminal 3 of control switch and ground.
● Ground faulty.

↓ Yes

INSPECT CONTROL SWITCH (See page BE-111)
Is control switch operation normal?

No → Replace control switch. Then recheck system.

↓ Yes

CC ECU

Connect connector to control switch.
Disconnect connectors from CC ECU and inspect connectors on wire harness side as follows.

↓

INSPECT MAIN SWITCH CIRCUIT
Is there continuity between terminal 4 and ground with main switch OFF?

Yes → Short circuit in wire harness between terminals 4 of CC ECU and 5 of control switch.

↓ No

Is there continuity between terminal 4 and ground with main switch ON?

No → Open circuit in wire harness between terminals 4 of CC ECU and 5 of control switch.

↓ Yes

INSPECT CONTROL SWITCH CIRCUIT
Is there continuity between terminal 18 and ground with control switch OFF?

Yes → Short circuit in wire harness between terminals 18 of CC ECU and 4 of control switch.

↓ No

Is there resistance as shown in table below between terminal 18 and ground when control switch is turned to each position?

Position	Resistance (Ω)
RES/ACC	Approx. 68
SET/COAST	Approx. 198
CANCEL	Approx. 418

No → Open circuit in wire harness between terminals 18 of CC ECU and 4 of control switch.

↓ Yes

Replace CC ECU. Then recheck system.

CC: Cruise Control

D MAIN SWITCH CIRCUIT (CANADA)

HINT: While carrying out the following inspection, make certain that the connectors and terminals are properly connected.

CONTROL SWITCH

Disconnect connector from control switch and inspect connector on wire harness side as follows.

↓

INSPECT GROUND CONNECTION
Is there continuity between terminal 19 and ground?

No → ● Open circuit in wire harness between terminal 19 of control switch and ground.
● Ground faulty.

↓ Yes

INSPECT CONTROL SWITCH (See page BE-111)
Is control switch operation normal?

No → Replace control switch. Then recheck system.

↓ Yes

CC ECU

Connect connector to control switch.
Disconnect connector from CC ECU and inspect connector on wire harness side as follows.

↓

INSPECT MAIN SWITCH CIRCUIT
Is there continuity between terminal 4 and ground with MAIN switch ON.

No → Open circuit in wire harness between terminal 4 of CC ECU and terminal 15 of control switch.

↓ Yes

Is there continuity between terminal 4 and ground when MAIN switch OFF.

Yes → Short circuit in wire harness between terminal 4 of CC ECU and terminal 15 of control switch.

↓ No

Replace CC ECU.
Then recheck system.

CC: Cruise Control

E SET/COAST SWITCH CIRCUIT (CANADA)

HINT: While carrying out the following inspection, make certain that the connectors and terminals are properly connected.

CONTROL SWITCH

Disconnect connector from control switch and inspect connector on wire harness side as follows.

↓

INSPECT GROUND CONNECTION
Is there continuity between terminal 19 and ground?

No → ● Open circuit in wire harness between terminal 19 of control switch and ground.
● Ground faulty.

↓ Yes

INSPECT CONTROL SWITCH
(See page BE-111)
Is control switch operation normal?

No → Replace control switch. Then recheck system.

↓ Yes

CC ECU

Connect connector to control switch.
Disconnect connector from CC ECU and inspect connector on wire harness side as follows.

↓

INSPECT SET/COAST CIRCUIT
Is there continuity between terminal 19 and ground with control switch turned to SET/COAST position?

No → Open circuit in wire harness between terminal 19 of CC ECU and terminal 5 of control switch.

↓ Yes

Is there continuity between terminal 19 and ground when control switch released?

Yes → Short circuit in wire harness between terminal 19 of CC ECU and terminal 5 of control switch.

↓ No

Replace CC ECU.
Then recheck system.

CC: Cruise Control

F RES/ACC SWITCH CIRCUIT (CANADA)

HINT: While carrying out the following inspection, make certain that the connectors and terminals are properly connected.

CONTROL SWITCH

Disconnect connector from control switch and inspect connector on wire harness side as follows.

↓

INSPECT GROUND CONNECTION
Is there continuity between terminal 19 and ground?

No → ● Open circuit in wire harness between terminal 19 of control switch and ground.
● Ground faulty.

Yes ↓

INSPECT CONTROL SWITCH
(See page BE-111)
Is control switch operation normal?

No → Replace control switch. Then recheck system.

Yes ↓

CC ECU

Connect connector to control switch.
Disconnect connector from CC ECU and inspect connector on wire harness side as follows.

↓

INSPECT RESUME/ACCEL CIRCUIT
Is there continuity between terminal 18 and ground with control switch turned to RES/ACC position?

No → Open circuit in wire harness between terminal 18 of CC ECU and terminal 17 of control switch.

Yes ↓

Is there continuity between terminal 18 and ground when control switch released?

Yes → Short circuit in wire harness between terminal 18 of CC ECU and terminal 17 of control switch.

No ↓

Replace CC ECU.
Then recheck system.

CC: Cruise Control

G CANCEL SWITCH CIRCUIT (CANADA)

HINT: While carrying out the following inspection, make certain that the connectors and terminals are properly connected.

CONTROL SWITCH

Disconnect connector from control switch and inspect connector on wire harness side as follows.

↓

INSPECT GROUND CONNECTION
Is there continuity between terminal 19 and ground?

No → ● Open circuit in wire harness between terminal 19 of control switch and ground.
● Ground faulty.

Yes ↓

INSPECT CONTROL SWITCH
(See page BE-111)
Is control switch operation normal?

No → Replace control switch. Then recheck system.

Yes ↓

CC ECU

Connect connector to control switch.
Disconnect connector from CC ECU and inspect connector on wire harness side as follows.

↓

INSPECT CANCEL CIRCUIT
Is there continuity between terminal 17 and ground with control switch turned to CANCEL position?

No → Open circuit in wire harness between terminal 17 of CC ECU and terminal 11 of control switch.

Yes ↓

Is there continuity between terminal 17 and ground when control switch released?

Yes → Short circuit in wire harness between terminal 17 of CC ECU and terminal 11 of control switch.

No ↓

Replace CC ECU.
Then recheck system.

CC: Cruise Control

H ACTUATOR CIRCUIT

HINT: While carrying out the following inspection, make certain that the connectors and terminals are properly connected.

ACTUATOR

Disconnect connector from actuator and inspect connector on wire harness side as follows.

↓

INSPECT GROUND CONNECTION
Is there continuity between terminal 4 and ground?

No → ● Open circuit in wire harness between terminal 4 of actuator and ground.
● Ground faulty.

Yes ↓

INSPECT ACTUATOR (See page BE-113)
Is actuator operation normal?

No → Replace actuator. Then recheck system.

Yes ↓

STOP LIGHT SWITCH

INSPECT STOP LIGHT SWITCH INSTALLATION
Is stop light switch installed properly?

No → Reinstall stop light switch properly. Then recheck system.

Yes ↓

Connect connector to actuator.
Disconnect connector from stop light switch and inspect connector on wire harness side as follows.

↓

INSPECT SAFETY MAGNETIC CLUTCH CIRCUIT
Is there approx. 38.5 Ω between terminal 4 and ground?

No → Open or short circuit in wire harness between terminals 4 of stop light and 5 of actuator.

Yes ↓

INSPECT STOP LIGHT SWITCH (See page BE-111)
Is stop light switch operation normal?

No → Replace stop light switch. Then recheck system.

Yes ↓

CONTINUED ON NEXT PAGE

CC: Cruise Control

CONTINUED FROM PREVIOUS PAGE

CC ECU

Connect connector to stop light switch.
Disconnect connectors from CC ECU and inspect connector on wire harness side as follows.

INSPECT SAFETY MAGNETIC CLUTCH CIRCUIT
Is there approx. 38.5 Ω between terminal 10 and ground?

No → Open or short circuit in wire harness between terminals 10 of CC ECU and 4 of actuator.

Yes

INSPECT MOTOR CIRCUIT
Is there continuity between terminal 12 and ground?

Yes → Short circuit in wire harness between terminals 12 of CC ECU and 6 of actuator.

No

Is there continuity between terminal 11 and ground?

Yes → Short circuit in wire harness between terminals 11 of CC ECU and 7 of actuator.

No

Is there continuity between terminals 11 and 12 with actuator arm in a position except max. open or max. close?

No → Open circuit in wire harness between terminals 12 of CC ECU and 6 of actuator or between terminals 11 of CC ECU and 7 of actuator.

Yes

INSPECT POSITION SENSOR CIRCUIT
Is there continuity between terminal 24 and ground?

Yes → Short circuit in wire harness between terminals 24 of CC ECU and 1 of actuator.

No

Is there approx. 2 kΩ between terminals 24 and 26?

No →
- Open circuit in wire harness between terminals 26 of CC ECU and 3 of actuator.
- Open circuit in wire harness between terminals 24 of CC ECU and 1 of actuator.

Yes

Does resistance change even between terminals 25 and 26?

No → Open or short circuit in wire harness between terminals 25 of CC ECU and 2 of actuator.

Yes

Replace CC ECU. Then recheck system.

CC: Cruise Control

I SPEED SENSOR CIRCUIT (with M/T)

HINT: While carrying out the following inspection, make certain that the connectors and terminals are properly connected.

SPEED SENSOR

Disconnect connector from speed sensor and inspect connector on wire harness side as follows.

↓

INSPECT GROUND CONNECTION
Is there continuity between terminal 3 and ground?

No → ● Open circuit in wire harness between terminal 3 of speed sensor and ground.
● Ground faulty.

Yes ↓

INSPECT SPEED SENSOR (See page BE-112)
Is speed sensor operation normal?

No → Replace speed sensor. Then recheck system.

Yes ↓

CC ECU

Connect connector to speed sensor.
Disconnect connector from CC ECU and inspect connector on wire harness side as follows.

↓

INSPECT SPEED SENSOR CIRCUIT
Is there continuity repeatedly between terminal 20 and ground?

No → ● Open or short circuit in wire harness between terminals 20 of CC ECU and 2 of speed sensor.

Yes ↓

Replace CC ECU. Then recheck system.

CC: Cruise Control

J SPEED SENSOR CIRCUIT (with A/T: COMBINATION METER)

HINT: While carrying out the following inspection, make certain that the connectors and terminals are properly connected.

SPEED METER CABLE

Does meter fluctuate when driving at steady speed?

Yes → Replace meter cable. Then recheck system.

No

COMBINATION METER

Disconnect connector "A" from combination meter and inspect connector on wire harness side as follows.

INSPECT GROUND CONNECTION
Is there continuity between terminal A-1 and ground?

No →
- Open circuit in wire harness between terminal A-1 of combination meter and ground.
- Ground faulty.

Yes

INSPECT SPEED SENSOR (See page BE-112)
Is speed sensor operation normal?

No → Replace speedometer. Then recheck system.

Yes

CC ECU

Connect connector "A to combination meter.
Disconnect connector from CC ECU and inspect connector on wire harness side as follows.

INSPECT SPEED SENSOR CIRCUIT
Is there continuity repeatedly between terminal 20 and ground?

No →
- Open or short circuit in wire harness between terminals 20 of CC ECU and B-10 of combination meter.
- Open or short circuit in circuit plate of combination meter between terminal B-10 and speed sensor.
- Open circuit in circuit plate of combination meter between terminal A-1 and speed sensor.

Yes

Replace CC ECU. Then recheck system.

CC: Cruise Control

K SPEED SENSOR CIRCUIT (with A/T: ECT)

HINT: While carrying out the following inspection, make certain that the connectors and terminals are properly connected.

SPEED SENSOR

Disconnect connector from speed sensor and inspect connector on wire harness side as follows.

↓

INSPECT GROUND CONNECTION
Is there continuity between terminal 1 and ground?

No → ● Open circuit in wire harness between terminal 1 of speed sensor and ground.
● Ground faulty.

Yes ↓

INSPECT SPEED SENSOR (See page BE-112)
Is speed sensor operation normal?

No → Replace speed sensor. Then recheck system.

Yes ↓

CC ECU

Connect connector to speed sensor.
Disconnect connector from CC ECU and inspect connector on wire harness side as follows.

↓

INSPECT SPEED SENSOR CIRCUIT
Is there continuity repeatedly between terminal 21 and ground?

No → ● Open or short circuit in wire harness between terminals 21 of CC ECU and of speed sensor.

Yes ↓

Replace CC ECU. Then recheck system.

CC: Cruise Control

L STOP LIGHT SWITCH CIRCUIT

HINT: While carrying out the following inspection, make certain that the connectors and terminals are properly connected.

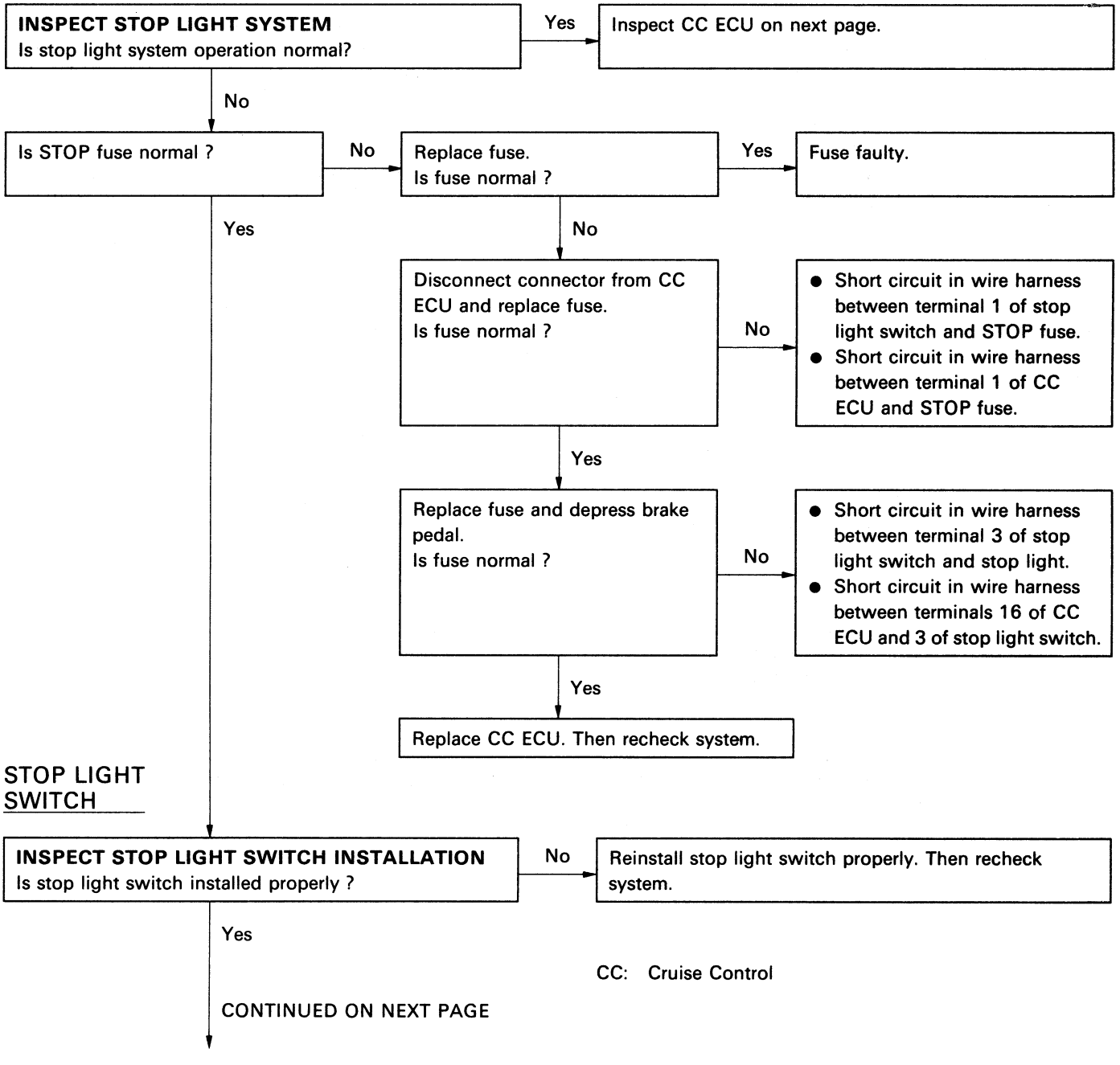

CONTINUED FROM PREVIOUS PAGE

STOP LIGHT SWITCH

Disconnect connector from stop light switch and inspect connector on wire harness side as follows.

INSPECT POWER SOURCE
Is there battery voltage between terminal 1 and ground?

No → Open circuit in wire harness between terminal 1 of stop light switch and STOP fuse.

Yes

INSPECT STOP LIGHT CIRCUIT
Connect terminals 1 and 3.
Do stop light lights up?

No →
- Open circuit in wire harness between terminal 3 of stop light switch and ground.
- Ground faulty.

Yes

INSPECT STOP LIGHT SWITCH
(See page BE-111)
Is stop light switch operation normal?

No → Replace stop light switch. Then recheck system.

Yes

CC ECU

Connect connector to stop light switch.
Disconnect connector from CC ECU and inspect connector on wire harness side as follows.

← If stop light system operation is normal, start inspection from this step.

INSPECT STOP LIGHT SWITCH CIRCUIT
Is there battery voltage between terminal 1 and ground?

No → Open circuit in wire harness between terminal 1 of CC ECU and STOP fuse.

Yes

Is there battery voltage between terminal 16 and ground when brake pedal depressed?

No → Open circuit in wire harness between terminals 16 of CC ECU and 3 of stop light switch.

Yes

Replace CC ECU. Then recheck system.

CC: Cruise Control

M PARKING BRAKE SWITCH CIRCUIT

HINT: While carrying out the following inspection, make certain that the connectors and terminals are properly connected.

INSPECT PARKING BRAKE SWITCH
(See page BE-111)
Is parking brake switch operation normal?

No → Replace parking brake switch. Then recheck system.

Yes

CC ECU

Connect connector to parking brake switch.
Disconnect connector from CC ECU and inspect connector on wire harness side as follows.

INSPECT PARKING BRAKE SWITCH CIRCUIT
Is there continuity between terminal 3 and ground when parking brake lever is released?

Yes → Short circuit in wire harness between terminal 3 of CC ECU and parking brake switch.

No

Is there continuity between terminal 3 and ground when parking brake lever is pulled?

No → Open circuit in wire harness between terminal 3 of CC ECU and parking brake switch.

Yes

Replace CC ECU. Then recheck system.

CC: Cruise Control

N CLUTCH SWITCH CIRCUIT (with M/T)

HINT: While carrying out the following inspection, make certain that the connectors and terminals are properly connected.

CLUTCH SWITCH

INSPECT CLUTCH SWITCH INSTALLATION
Is clutch switch installed properly?

No → Reinstall clutch switch properly. Then recheck system.

Yes ↓

Disconnect connector from clutch switch and inspect connector on wire harness side as follows.

INSPECT GROUND CONNECTION
Is there continuity between terminal 1 and ground?

No → ● Open circuit in wire harness between terminal 1 of clutch switch and ground.
● Ground faulty.

Yes ↓

INSPECT CLUTCH SWITCH (See page BE-112)
Is clutch switch operation normal?

No → Replace clutch switch. Then recheck system.

Yes ↓

CC ECU

Connect connector to clutch switch.
Disconnect connector from CC ECU and inspect connector on wire harness side as follows.

INSPECT CLUTCH SWITCH CIRCUIT
Is there continuity between terminal 2 and ground when clutch pedal released?

Yes → Short circuit in wire harness between terminals 2 of CC ECU and 2 of clutch switch.

No ↓

Is there continuity between terminal 2 and ground when clutch pedal depressed?

No → Open circuit in wire harness between terminal 2 of CC ECU and 2 of clutch switch.

Yes ↓

Replace CC ECU. Then recheck system.

CC: Cruise Control

O NEUTRAL START SWITCH CIRCUIT (with A/T)

HINT: While carrying out the following inspection, make certain that the connectors and terminals are properly connected.

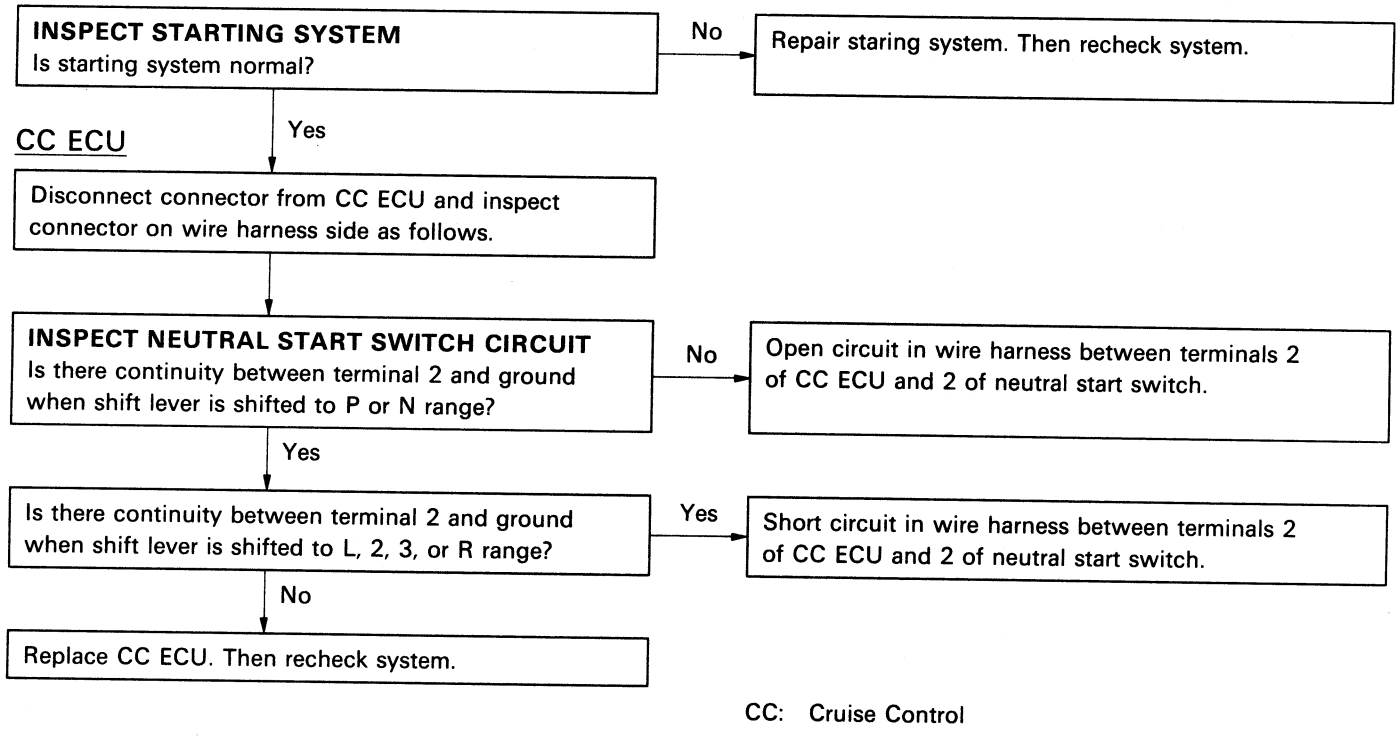

CC: Cruise Control

P ECT SOLENOID No. 2 CIRCUIT (with A/T)

HINT: While carrying out the following inspection, make certain that the connectors and terminals are properly connected.

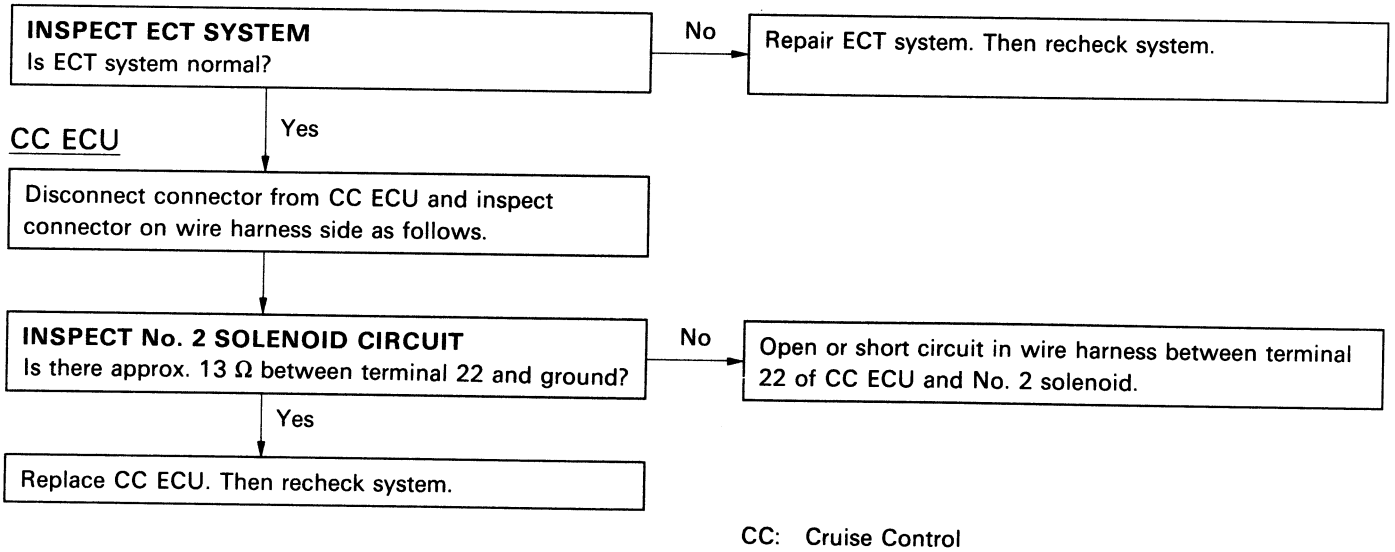

CC: Cruise Control

Q IDL SIGNAL CIRCUIT

HINT: While carrying out the following inspection, make certain that the connectors and terminals are properly connected.

THROTTLE POSITION SENSOR

INSPECT THROTTLE POSITION SENSOR ADJUSTMENT
Is throttle position sensor adjustment normal?

No → Adjust position sensor position. Then recheck system.

Yes ↓

INSPECT THROTTLE POSITION SENSOR
Is throttle position sensor operation normal?

No → Replace throttle position sensor. Then recheck system.

Yes ↓

CC ECU

Connect connector to throttle position sensor. Disconnect connector from CC ECU and inspect connector on wire harness side as follows.

↓

INSPECT IDL SIGNAL CIRCUIT
Is there continuity between terminal 23 and ground when acceleration pedal is released?

No → Open circuit in wire harness between terminals 23 of CC ECU and 2 of throttle position sensor.

Yes ↓

Is there continuity between terminal 23 and ground when acceleration pedal is depressed?

Yes → Short circuit in wire harness between terminals 23 of CC ECU and 2 of throttle position sensor.

No ↓

Replace CC ECU. Then recheck system.

CC: Cruise Control

Wire Harness Side

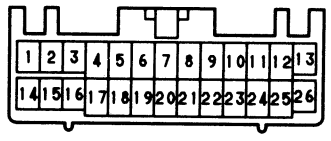

Vd-26-1-B

Cruise Control ECU Circuit

INSPECT ECU CIRCUIT

Disconnect connector and inspect connector on wire harness side as shown in the chart.

(USA)

Check for	Measured item	Tester connection	Condition		Specified Value
Continuity	Clutch Switch (M/T)	2 – ground	Clutch pedal Position	released	No continuity
				depressed	Continuity
	Neutral start switch (A/T)	2 – ground	Shift lever position	N or P	Continuity
				L,2,D or R	No continuity
	Parking brake switch	3 – ground	Parking brake lever position	released	No continuity
				pulled	Continuity
	Control switch	4 – ground	Main switch position	pushed	Continuity
				released	No continuity
	Actuator (motor)	11 – 12	Actuator arm position: max. OPEN		(12→11) Continuity
					(11→12) No continuity
			Actuator arm position: max. CLOSE		(11→12) Continuity
					(12→11) No continuity
			Actuator arm position: any position except above position		(11→12) Continuity
	Ground connection	13 – ground	Constant		Continuity
Resistance	Actuator (Safety magnetic clutch)	10 – ground	Brake pedal position	released	Approx. 38.5 Ω
				depressed	No continuity
	Control switch	18 – ground	Control switch position	OFF	No continuity
				RES/ACC	Approx. 68 Ω
				SET/COAST	Approx. 198 Ω
				CANCEL	Approx. 418 Ω
	ECT No. 2 solenoid valve (A/T)	22 – ground	Constant		Approx. 13 Ω
	Actuator (position sensor)	24 – 26	Constant		Approx. 2 kΩ
		25 – 26	Actuator arm turned		Resistance change even
Voltage	STOP fuse	1 – ground	Constant		Battery voltage
	Power source	14 – ground	Ignition switch position	LOCK or ACC	No voltage
				ON	Battery voltage
	Stop light	16 – ground	Brake pedal position	released	No voltage
				depressed	Battery voltage
	Speed sensor	20 – ground	With ignition switch ON, speedometer shaft or speed sensor shaft turned.		Voltage changes repeatedly

(CANADA)

Check for	Measured item	Tester connection	Condition		Specified value
Continuity	Clutch switch	2 – ground	Clutch pedal position	released	No continuity
				depressed	Continuity
	Parking brake switch	3 – ground	Parking brake lever position	released	No continuity
				pulled	Continuity
	MAIN switch*1	4 – ground	Main switch position	pushed	Continuity
				released	No continuity
	Actuator (motor)	11 – 12	Actuator arm position: max. OPEN		(12→11) Continuity
					(11→12) No continuity
			Actuator arm position: max. CLOSE		(11→12) Continuity
					(12→11) No continuity
			Actuator arm position: any position except above position		(11↔12) Continuity
	Ground connection	13 – ground	Constant		Continuity
	CANCEL switch*1	17 – ground	Cruise control switch position	turned to "CANCEL"	Continuity
				released	No continuity
	RES/ACC switch*1	18 – ground		turned to "RES/ACC"	Continuity
				released	No continuity
	SET/COAST switch*1	19 – ground		turned to "SET/COAST"	Continuity
				released	No continuity
Resistance	Actuator (Safety magnetic clutch)	10 – ground	Brake pedal position	released	Approx. 38.5 Ω
				depressed	No continuity
	Actuator (position sensor)	24 – 26	Constant		Approx. 2 kΩ
		25 – 26	Actuator arm turned		Resistance change even
Voltage	STOP fuse	1 – ground	Constant		Battery voltage
	Power source	14 – ground	Ignition switch position	LOCK or ACC	No voltage
				ON	Battery voltage
	Stop light	16 – ground	Brake pedal position	released	No voltage
				depressed	Battery voltage
	Speed Sensor	20 – ground	With ignition switch ON, speedometer shaft or speed sensor shaft turned.		Voltage changes repeatedly

*1 There is on cruise control switch.

USA

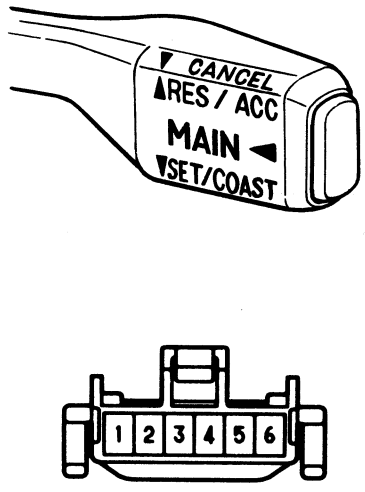

BE4009
e-6-1-C

Parts Inspection

1. **INSPECT SWITCHES**
(Control Switch: USA)

(a) Check continuity between terminals 3 and 5.

Main switch position	Condition
OFF	No continuity
ON	Continuity

(b) Measure resistance between terminals 3 and 4.

Control switch position	Resistance (Ω)
OFF	∞ (No continuity)
RES/ACC	Approx. 68
SET/COAST	Approx. 198
CANCEL	Approx. 418

If resistance value is not as specified, replace the control switch.

CANADA

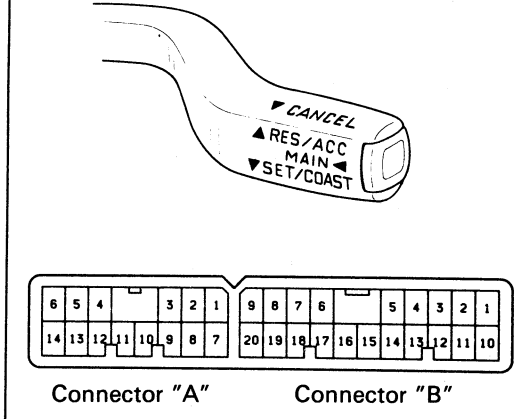

BE4909
V-34-2

(Control Switch: CANADA/Continuity)

Terminal / Switch Position	B-5 (V)	B-11 (Y)	B-15 (R)	B-17 (Or)	B-19 (B)
OFF					
RES/ACC				○	○
MAIN			○		○
SET/COAST	○				○
CANCEL		○			○

If continuity is not as specified, replace the switch.

(Parking Brake Switch)

See Step 2 of Brake Warning System on page BE-58

(Stop Light Switch/Continuity)

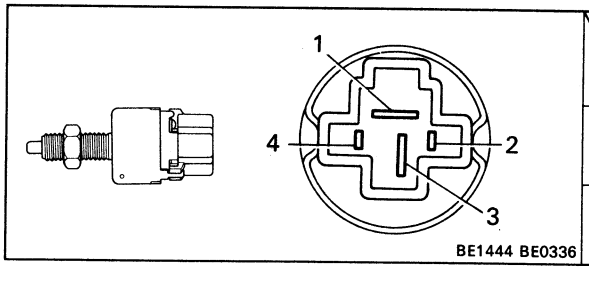

BE1444 BE0336

Terminal / Switch position	1	2	3	4
Switch pin free (Brake pedal depressed)	○		○	
Switch pin pushed in (Brake pedal released)		○		○

If continuity is not as specified, replace the stop light switch.

(Clutch Switch: M/T/Continuity)

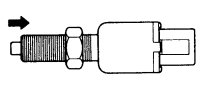

BE2737 G-2-2

Terminal / Condition	1	2
Switch pin free (Clutch pedal depressed)	O	O
Switch pin pushed in (Clutch pedal released)		

If continuity is not as specified, replace the switch.

(Neutral Start Switch : A/T)
See page AT-29.

2. INSPECT RELAY
(Starter Relay/Continuity)

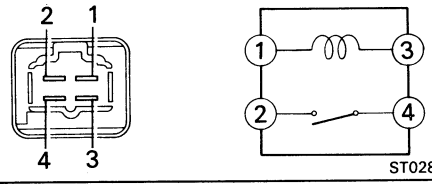

ST0280 BE1840

Terminal / Condition	1	2	3	4
Constant	O	∿	O	
Apply battery voltage to terminals 1 and 3.		O		O

If continuity is not as specified, replace the relay.

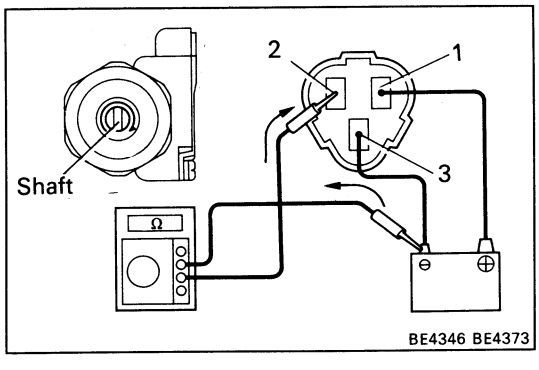

BE4346 BE4373

3. INSPECT SPEED SENSOR
(M/T)

(a) Connect the positive (+) lead from the battery to terminal 1 and the negative (–) lead to terminal 3.

(b) Check that there is continuity between terminal 2 and the battery negative (–) terminal four times per each revolution of the shaft.

HINT: Connect the test leads so that the current from the ohmmeter can flow from terminal 2 to the battery negative (–) terminal.

If operation is not as specified, replace the speed sensor.

(A/T : Combination Meter)
See page BE-52

(A/T : ECT)
See page AT-29

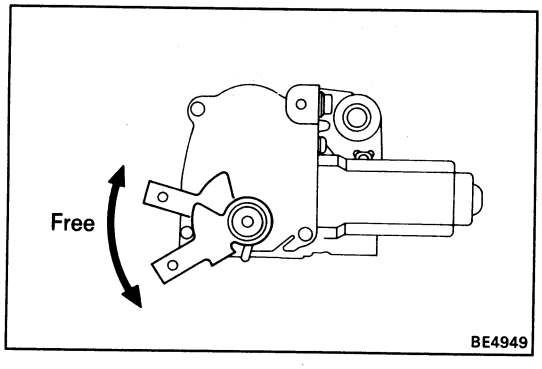

4. INSPECT ACTUATOR

Safety Magnetic Clutch

(a) Check that the arm moves smoothly by hand.

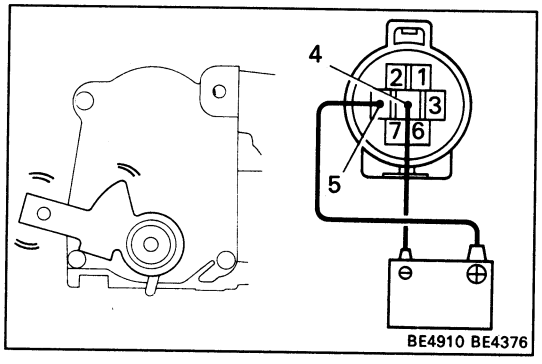

(b) Connect the positive (+) lead from the battery to terminal 5 and the negative (–) lead to terminal 4. (Safety Magnetic Clutch turned ON)

(c) Check that the arm does not move by hand.

If operation is not as specified, replace the motor.

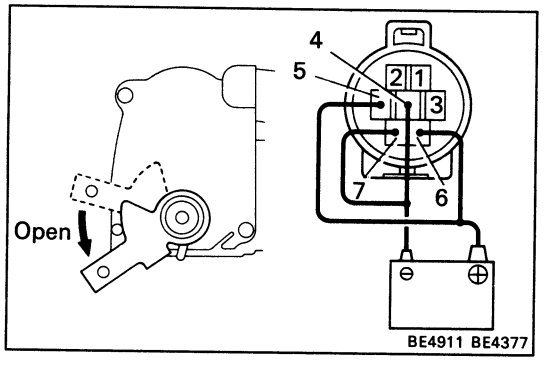

Motor

(a) With the safety magnetic clutch ON, connect the positive (+) lead from the battery to terminal 6 and the negative (–) lead to terminal 7, check that the arm moves to the open side.

(b) When the arm reached to the open position, check that the motor operation stops.

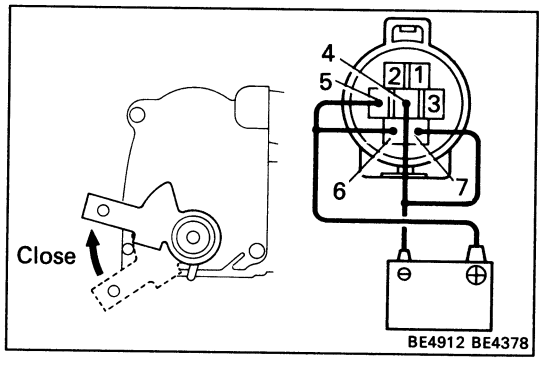

(c) With the safety magnetic clutch ON, connect the positive (+) lead from the battery to terminal 7 and the negative (–) lead to terminal 6, check that the arm moves to the close side.

(d) When the arm reaches to the closed position, check that the motor operation stops.

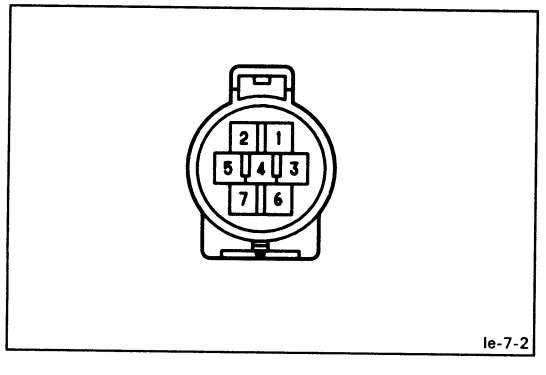

Position Sensor

(a) Measure the resistance between terminals 1 and 3.

Resistance: Approx. 2 kΩ

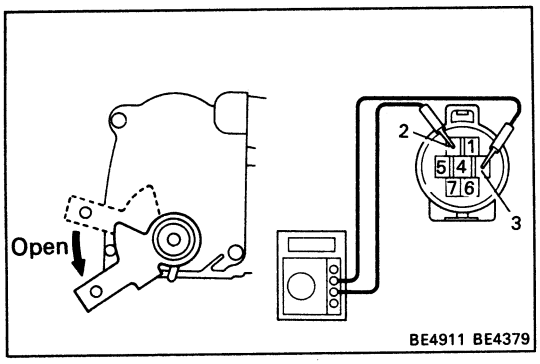

(b) When the arm is moving from the closed to open position, check that resistance between terminals 2 and 3 increases from approx. 0.5 to 1.7 kΩ.

If operation is not as specified, replace the motor.

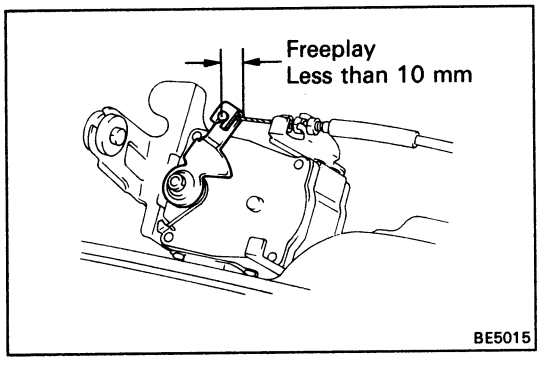

Cruise Control Cable

(a) Check that the cruise control cable freeplay is less than 10 mm (0.39 in.).

(b) If necessary adjust the cruise control cable freeplay.

5. INSPECT THROTTLE POSITION SENSOR
See pages FI-134 and FI-141.

THEFT DETERRENT SYSTEM

Parts Location

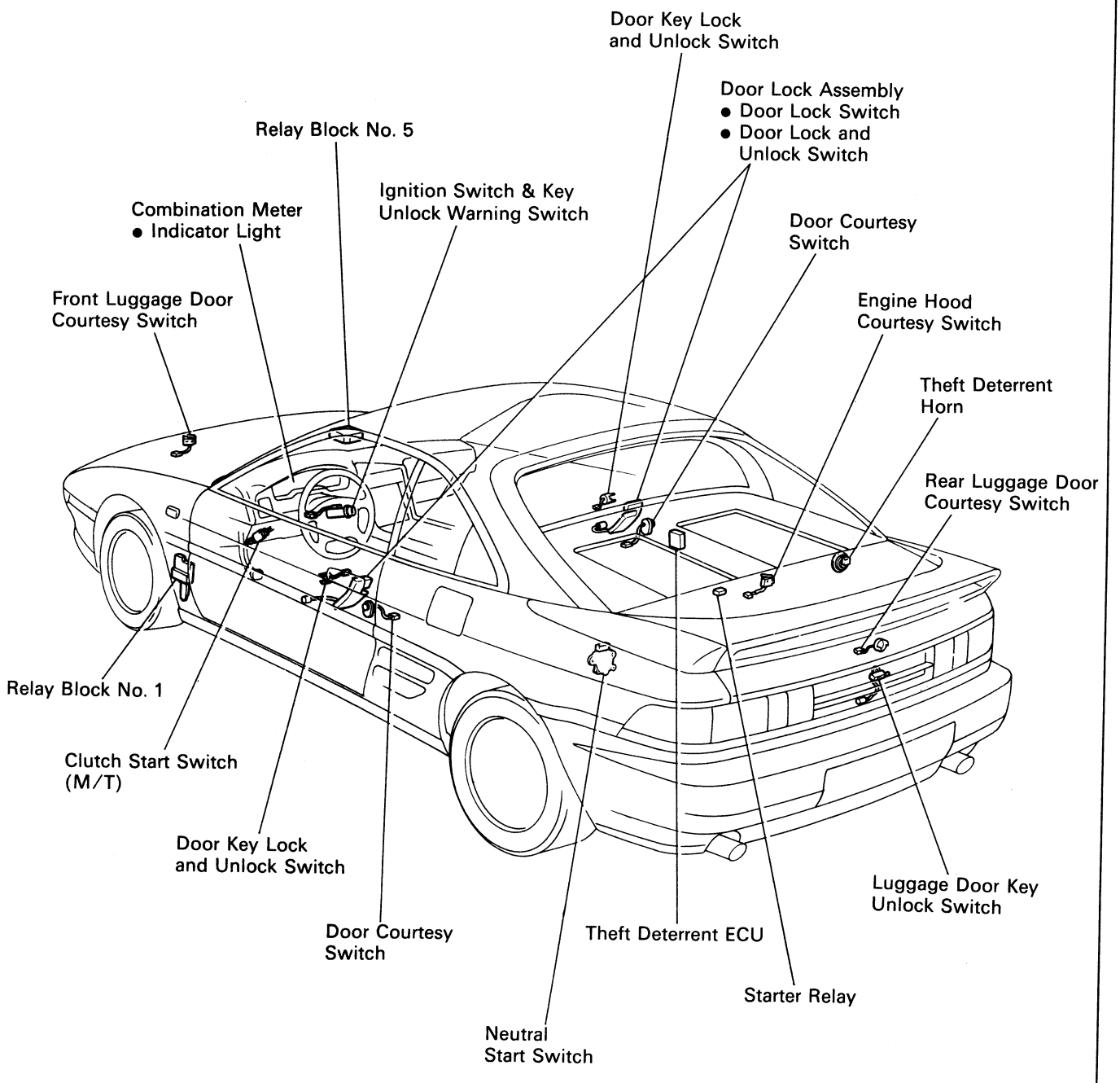

BE5246

Wiring Diagrams

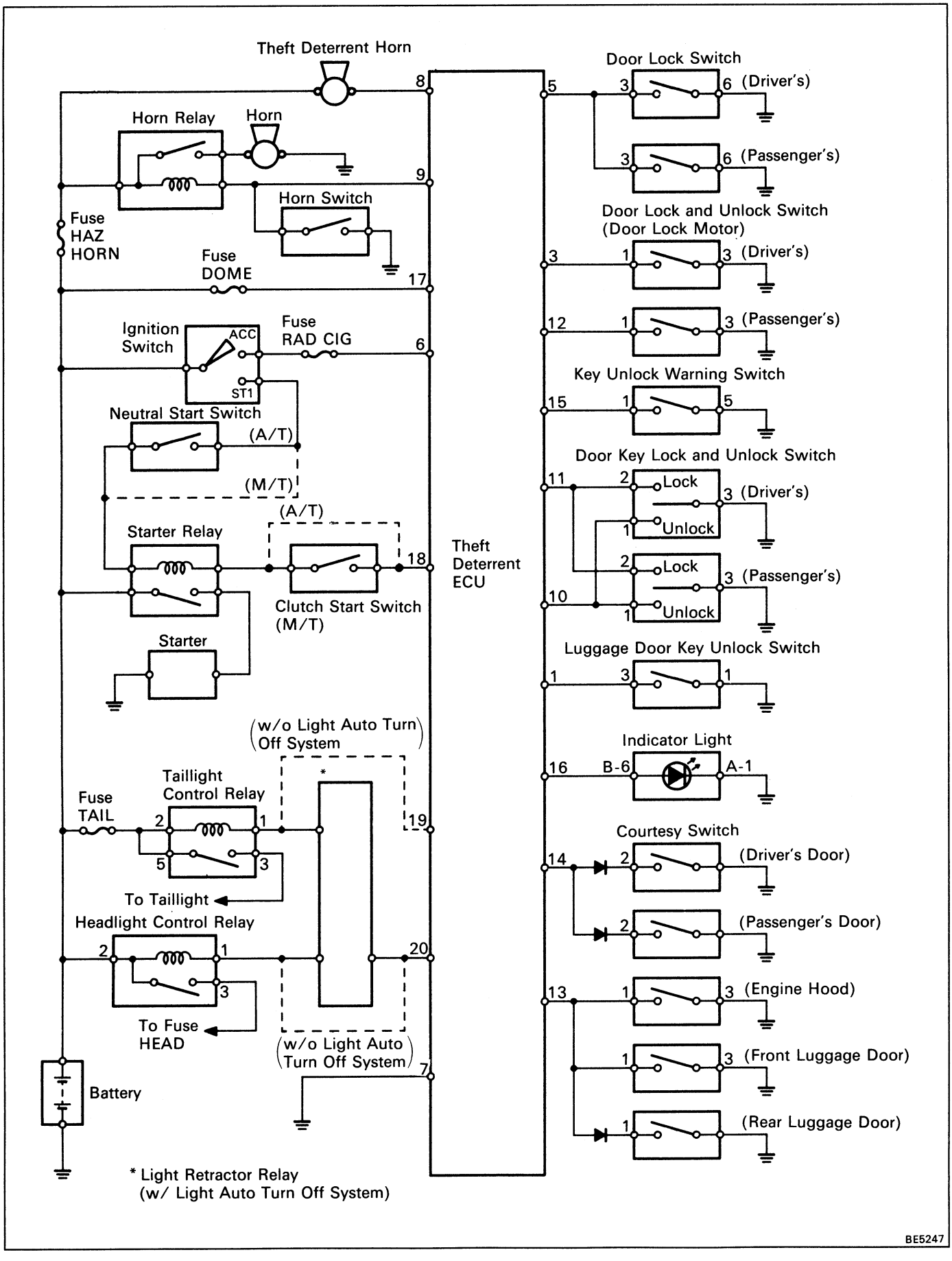

Connector Diagrams

Theft Deterrent ECU

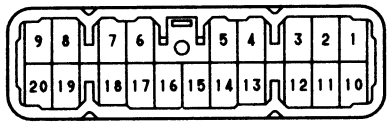

Door Key Lock and Unlock Switch

Luggage Door Key Unlock Switch

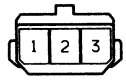

Door Lock Assembly

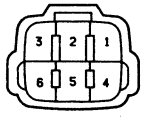

Theft Deterrent Horn

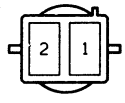

Courtesy Switch (Engine Hood)

(Front Luggage Door)

(Rear Luggage Door)

(Door)

Ignition Switch
Key Unlock Warning Switch

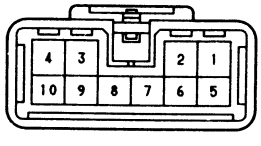

Starter Relay

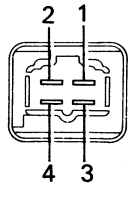

Headlight Control Relay

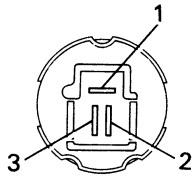

Taillight Control Relay

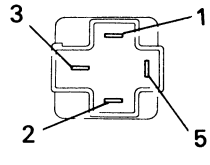

e-20-2-C Ie-3-1 GA-3-1
IS-6-2-B IA-2-2
IU-3-2 IU-3-2 e-1-1 e-2-1-G
e-10-2-B ST0280 BE2763 BE4049

Troubleshooting

- Check that the operation of Power Door Lock Control System is normal.
- When the system is not operating, lower the door glass and confirm under what conditions it does not operate, or malfunctions.

Problem	Inspection Item	Section
Theft deterrent system can not be set.	Power source circuit	A
Indicator light does not light even if theft deterrent system operated.	Indicator light circuit	B
Theft deterrent system does not operate when driver's and passenger's doors opened.	Door Lock and unlock switch circuit Door lock switch circuit Door courtesy switch circuit	C D E
Theft deterrent system does not operate when front and rear luggage doors opened.	Luggage door courtesy switch circuit	E
Theft deterrent system does not operate when engine hood opened.	Engine hood courtesy switch circuit	E
Theft deterrent system does not cancel when driver's and passenger's doors unlocked with key.	Door key lock and unlock switch circuit	F
Theft deterrent system does not cancel when rear luggage door unlocked with key.	Luggage door key unlock switch circuit	G
Theft deterrent system does not cancel when ignition switch turned to ON or ACC position.	Ignition switch circuit Key unlock warning switch circuit	H I
Starter cut system does not operate even if theft deterrent system operated.	Starter cut system circuit	J
Starter cut system does not cancel even if theft deterrent system canceled.	Starter cut system circuit	J
Horn does not blow even if theft deterrent system operated	Theft deterrent horn circuit Standard equipment horns circuit	K
Theft deterrent horn blows even if system is not set.	Theft deterrent horn circuit	K
Headlights do not flash even if theft deterrent system operated.	*1 Light retractor relay circuit *2 Headlight control relay circuit	L M
Taillights do not flash even if theft deterrent system operated.	*1 Light retractor relay circuit *2 Taillight control relay circuit	L N
Headlights flash even if system is not set.	*1 Light retractor relay circuit *2 Headlight control relay circuit	L M
Taillights flash even if system is not set.	*1 Light retractor relay circuit *2 Taillight control relay circuit	L N

*1 w/ Light Auto Turn Off System
*2 w/o Light Auto Turn Off System

A POWER SOURCE CIRCUIT

Turn ignition switch off.

Is DOME fuse normal?
- No → Replace fuse. Is operation normal?
  - No → Short circuit in wire harness between fuse and terminal 17 of TD ECU.
  - Yes → Fuse faulty.
- Yes

TD ECU

Disconnect TD ECU connector and inspect connector on wire harness side as follows.

INSPECT POWER SOURCE
Is there battery voltage between terminal 17 and ground.
- No → Open circuit in wire harness between fuse and terminal 17 of TD ECU.
- Yes

INSPECT GROUND CONNECTION
Is there continuity between terminal 7 and ground.
- No →
  - Open circuit in wire harness between terminal 7 of TD ECU and ground.
  - Ground faulty.
- Yes

INSPECT FOLLOWING SECTIONS:

Door Lock and Unlock Switch Circuit	Section C
Door Lock Switch Circuit	Section D
Courtesy Switch Circuit	Section E
Door Key Lock and Unlock Switch Circuit	Section F
Luggage Door Key Unlock Switch Circuit	Section G
Ignition Switch Circuit	Section H
Key Unlock Warning Switch Circuit	Section I

Yes

Replace TD ECU. Then recheck system.

TD: Theft Deterrent

B INDICATOR LIGHT CIRCUIT

Turn ignition switch off.

TD ECU

Disconnect TD ECU connector and inspect connector on wire harness side as follows.

INSPECT INDICATOR LIGHT CIRCUIT
Connect the negative lead from the ohmmeter to terminal 16 and positive lead to ground.
* Is there continuity between terminal 16 and ground?

No → Open circuit in indicator light circuit.

Yes

Replace TD ECU. Then recheck system.

*: This circuit includes the LED. If the circuit shows no continuity, change the positive and negative probes and recheck the circuit.

TD: Theft Deterrent

C DOOR LOCK AND UNLOCK SWITCH CIRCUIT

Turn ignition switch off.

TD ECU

Disconnect TD ECU connector and inspect connector on wire harness side as follows.

INSPECT DRIVER'S DOOR LOCK AND UNLOCK SWITCH CIRCUIT
Is there continuity between terminal 3 and ground with driver's door unlocked?

No → Open circuit in driver's door lock and unlock switch circuit.

Yes

INSPECT PASSENGER'S DOOR LOCK AND UNLOCK SWITCH CIRCUIT
Is there continuity between terminal 12 and ground with passenger's door unlocked?

No → Open circuit in passenger's door lock and unlock switch circuit.

Yes

Replace TD ECU. Then recheck system.

TD: Theft Deterrent

D DOOR LOCK SWITCH CIRCUIT

Turn ignition switch off.

TD ECU

Disconnect TD ECU connector and inspect connector on wire harness side as follows.

INSPECT DRIVER'S DOOR LOCK SWITCH CIRCUIT
Is there continuity between terminal 5 and ground with driver's door opened?

No → Open circuit in driver's door lock switch circuit.

Yes

INSPECT PASSENGER'S DOOR LOCK SWITCH CIRCUIT
Is there continuity between terminal 5 and ground with passenger's door opened?

No → Open circuit in passenger's door lock switch circuit.

Yes

Replace TD ECU. Then recheck system.

TD: Theft Deterrent

E COURTESY SWITCH CIRCUIT

Turn ignition switch off.

*: This circuit includes the diode. If the circuit shows no continuity, change the positive and negative probes and recheck the circuit.

TD ECU

Disconnect TD ECU connector and inspect connector on wire harness side as follows.

Driver's and Passenger's Door

INSPECT DRIVER'S DOOR COURTESY SWITCH CIRCUIT
Close passenger's door.
* Is there continuity between terminal 14 and ground with driver's door opened?

No → Open circuit in driver's door courtesy switch circuit.

Yes

INSPECT PASSENGER'S DOOR COURTESY SWITCH CIRCUIT
Close driver's door.
* Is there continuity between terminal 14 and ground with passenger's door opened?

No → Open circuit in passenger's door courtesy switch circuit.

Yes

Engine Hood

INSPECT ENGINE HOOD COURTESY SWITCH CIRCUIT
Close front and rear luggage doors.
Is there continuity between terminal 13 and ground with engine hood opened?

No → Open circuit in engine hood courtesy switch circuit.

Yes

Luggage Door

INSPECT FRONT LUGGAGE DOOR COURTESY SWITCH CIRCUIT
Close engine hood and rear luggage door.
Is there continuity between terminal 13 and ground with front luggage door opened?

No → Open circuit in front luggage door courtesy switch circuit.

Yes

INSPECT REAR LUGGAGE DOOR COURTESY SWITCH CIRCUIT
Close engine hood and front luggage door.
* Is there continuity between terminal 13 and ground with rear luggage door opened?

No → Open circuit in rear luggage door courtesy switch circuit.

Yes

Replace TD ECU. Then recheck system.

TD: Theft Deterrent

F DOOR KEY LOCK AND UNLOCK SWITCH CIRCUIT

Turn ignition switch off.

TD ECU

Disconnect TD ECU connector and inspect connector on wire harness side as follows.

DRIVER'S DOOR

INSPECT KEY LOCK SWITCH CIRCUIT
Is there continuity between terminal 11 and ground with driver's door locked with key?
- No → Open circuit in driver's door key lock switch circuit.
- Yes

Is there continuity between terminal 11 and ground with driver's door unlocked with key?
- Yes → Short circuit in driver's door key lock switch circuit.
- No

INSPECT KEY UNLOCK SWITCH CIRCUIT
Is there continuity between terminal 10 and ground with driver's door unlocked with key?
- No → Open circuit in driver's door key unlock switch circuit.
- Yes

Is there continuity between terminal 10 and ground with driver's door locked with key?
- Yes → Short circuit in driver's door key unlock switch circuit.
- No

PASSENGER'S DOOR

INSPECT KEY LOCK SWITCH CIRCUIT
Is there continuity between terminal 11 and ground with passenger's door locked with key?
- No → Open circuit in passenger's door key lock switch circuit.
- Yes

Is there continuity between terminal 11 and ground with passenger's door unlocked with key?
- Yes → Short circuit in passenger's door key lock switch circuit.
- No

INSPECT KEY UNLOCK SWITCH CIRCUIT
Is there continuity between terminal 10 and ground with passenger's door unlocked with key?
- No → Open circuit in passenger's door key unlock switch circuit.
- Yes

Is there continuity between terminal 10 and ground with passenger's door locked with key?
- Yes → Short circuit in passenger's door key unlock switch circuit.
- No

Replace TD ECU. Then recheck system.

TD: Theft Deterrent

G LUGGAGE DOOR KEY UNLOCK SWITCH CIRCUIT

Turn ignition switch off.

TD ECU

Disconnect TD ECU connector and inspect connector on wire harness side as follows.

INSPECT LUGGAGE DOOR KEY UNLOCK SWITCH CIRCUIT
Is there continuity between terminal 1 and ground with luggage door key free?

Yes → Short circuit in luggage door key unlock switch circuit.

No

Is there continuity between terminal 1 and ground with luggage door unlocked with key?

No → Open circuit in luggage door key unlock switch circuit.

Yes

Replace TD ECU. Then recheck system.

TD: Theft Deterrent

H IGNITION SWITCH CIRCUIT

Turn ignition switch OFF.

Is RAD CIG fuse normal?

No → Replace fuse. Is operation normal?

No → Short circuit in wire harness between fuse and terminal 6 of TD ECU.

Yes

Yes → Fuse faulty.

TD ECU

Disconnect TD ECU connector and inspect connector on wire harness side as follows.

INSPECT IGNITION SWITCH CIRCUIT
Is there battery voltage between terminal 6 and ground with ignition switch turned to ACC or ON.

No → Open circuit in wire harness between fuse and terminal 6 of TD ECU.

Yes

Replace TD ECU. Then recheck system.

TD: Theft Deterrent

I KEY UNLOCK WARNING SWITCH CIRCUIT

Turn ignition switch OFF.

TD ECU

Disconnect TD ECU connector and inspect connector on wire harness side as follows.

INSPECT KEY UNLOCK WARNING SWITCH CIRCUIT
Ignition key set to ignition switch.
Is there continuity between terminal 15 and ground?

No → Open circuit in key unlock warning switch circuit.

Yes

Ignition key removed from ignition switch.
Is there continuity between terminal 15 and ground?

Yes → Short circuit in key unlock warning switch circuit.

No

Replace TD ECU, Then recheck system.

TD: Theft Deterrent

J STARTER CUT SYSTEM CIRCUIT

Turn ignition switch to ST.

HINT: If starter does not operate, even when system is cancelled, before checking the circuit, use the key to turn the door lock to the unlock position and recheck starter operation.

TD ECU

Disconnect TD ECU connector and inspect connector on wire harness side as follows.

INSPECT STARTER CUT SYSTEM CIRCUIT
Turn ignition switch to ST position (*1 with shift lever at N or P position or *2 with clutch pedal depressed). Is there battery voltage between terminal 18 and ground?

No → Short or open circuit in starter relay circuit.

Yes

Replace TD ECU. Then recheck system.

TD: Theft Deterrent
*1 A/T
*2 M/T

K THEFT DETERRENT HORN CIRCUIT

Turn ignition switch off.

THEFT DETERRENT HORN

INSPECT THEFT DETERRENT HORN OPERATION
Disconnect connector from horn.
Is horn operation normal? (See page BE-130)

No → Replace theft deterrent horn.

Yes

TD ECU

Disconnect TD ECU connector and inspect connector on wire harness side as follows.

INSPECT THEFT DETERRENT HORN CIRCUIT
Is there battery voltage between terminal 8 and ground.

No → Open or short circuit in theft deterrent horn circuit.

Yes

INSPECT STANDARD EQUIPMENT HORN CIRCUIT
Is there battery voltage between terminal 9 and ground.

No → Open or short circuit in standard horn circuit.

Yes

Replace TD ECU. Then recheck system.

TD: Theft Deterrent

L LIGHT RETRACTOR RELAY CIRCUIT

Turn ignition switch off.

TD ECU

Disconnect TD ECU connector and inspect connector on wire harness side as follows.

INSPECT LIGHT RETRACTOR RELAY CIRCUIT
Ground the terminal 20 and check that the headlights and taillights light up.

No →
- Open circuit in light retractor relay circuit.
- Check the light retractor relay.

Yes

Replace TD ECU.

TD: Theft Deterrent

M HEADLIGHT CONTROL RELAY CIRCUIT (w/o LIGHT AUTO TURN OFF SYSTEM)

Turn ignition switch off.

TD ECU

Disconnect TD ECU connector and inspect connector on wire harness side as follows.

INSPECT HEADLIGHT CONTROL RELAY CIRCUIT
If there battery voltage between terminal 20 and ground.

No → Open or short circuit in headlight control relay circuit.

Yes

INSPECT HEADLIGHT CIRCUIT
(See pages BE-14 and 16)

No → Replace parts as necessary.

Yes

Replace TD ECU. Then recheck system

TD: Theft Deterrent

N TAILLIGHT CONTROL RELAY CIRCUIT (w/o LIGHT AUTO TURN OFF SYSTEM)

Turn ignition switch off.

TD ECU

Disconnect TD ECU connector and inspect connector on wire harness side as follows.

INSPECT TAILLIGHT CONTROL RELAY CIRCUIT
Is there battery voltage between terminal 19 and ground.

No → Open or short circuit in taillight control relay circuit.

Yes

INSPECT TAILLIGHT CIRCUIT
(See pages BE-14 and 16)

No → Replace as necessary part.

Yes

Replace TD ECU. Then recheck system.

TD: Theft Deterrent

Wire Harness Side

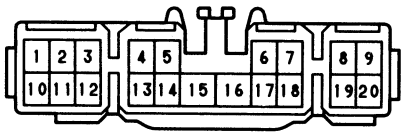

e-20-1

Parts Inspection

1. INSPECT THEFT DETERRENT ECU CIRCUIT

Disconnect the ECU and inspect the connector on the wire harness side as shown in the chart below.

Check for	Tester connection	Condition	Specified value
Continuity	1 – ground	Luggage door unlocked with key	Continuity
		Other position	No continuity
	3 – ground	Driver's door lock lever unlocked	Continuity
		Driver's door lock lever locked	No continuity
	5 – ground	Driver's and passenger's door closed	No continuity
		Others	Continuity
	7 – ground	Constant	Continuity
	10 – ground	Driver's or passenger's door unlocked with key	Continuity
		Others	No continuity
	11 – ground	Driver's or passenger's door locked with key	Continuity
		Others	No continuity
	12 – ground	Passenger's door lock lever unlocked	Continuity
		Passenger's door lock lever locked	No continuity
	*1 13 – ground	Engine hood, front luggage door and rear luggage door closed	No continuity
		Others	Continuity
	*1 14 – ground	Driver's and passenger's door closed	No continuity
		Others	Continuity
	15 – ground	Ignition key set to ignition switch	Continuity
		Ignition key removed from ignition switch	No continuity
	*1 16 – ground	Constant	Continuity
Voltage	6 – ground	Turn ignition switch to ACC or ON	Battery voltage
	8 – ground	Constant	Battery voltage
	9 – ground	Constant	Battery voltage
	17 – ground	Constant	Battery voltage
	18 – ground	(M/T) Turn ignition switch to START with clutch pedal depressed. (A/T) Turn ignition switch to START with shift lever at P or N position	Battery voltage
	*2 19 – ground	Constant	Battery voltage
	20 – ground	Constant	Battery voltage

*1 This circuit includes the LED or diode. If the circuit shows no continuity, change the positive and negative probes and recheck the circuit.

*2 w/o Light Auto Turn Off System

If circuit is correct, replace the theft deterrent ECU.

2. **INSPECT SWITCHES**
(Door Lock Switch: in Door Lock Assembly/ Continuity)

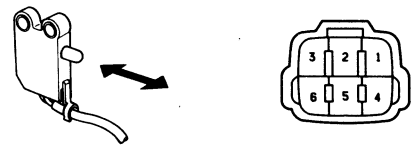

BE2587 IS-6-2-B

Terminal / Condition	3	6
Door closed (Switch pin pushed in)		
Door opened (Switch pin released)	O	O

If operation is not as specified, replace the door lock assembly.

(Door Lock and Unlock Switch/Continuity)

See Step 2 of Power Door Lock Control System on page BE-76.

(Key Unlock Warning Switch/Continuity)

See Step 1 of Key Confine Prevention System on page BE-11.

(Ignition Switch/Continuity)

See Ignition Switch on page BE-11.

(Door Key Lock and Unlock Switch/Continuity)

See Step 1 of Power Door Lock Control System on page BE-75.

(Luggage Door Key Unlock Switch/Continuity)

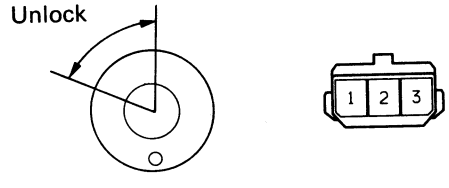

BE4929 GA-3-1

Terminal / Condition	1	3
OFF		
UNLOCK	O	O

(Engine Hood Courtesy Switch/Continuity)

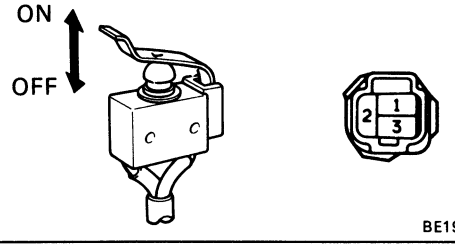

BE1974 IU-3-2

Terminal / Condition	1	2	3
OFF (Closed)			
ON (Opened)	O		O

(Front Luggage Door Courtesy Switch/Continuity)

See Engine Hood Courtesy Switch on page BE-129.

(Door Courtesy Switch/Continuity)

See Step 1 of Illuminated Entry System on page BE-41.

(Rear Luggage Door Courtesy Switch/Continuity)

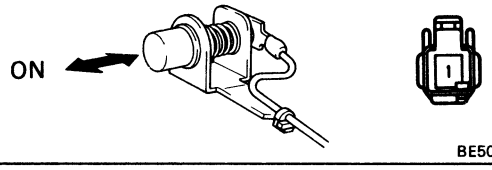

Terminal / Condition	1	Switch Body
OFF (closed)		
ON (Opened)	O———	———O

If operation is not as specified, replace the switch.

(Neutral Start Switch/Continuity)
See page AT-16.

(Clutch start switch/Continuity)
See page CL-5.

3. **INSPECT RELAY**
(Starter Relay/Continuity)
See page ST-18.

(Headlight Control Relay/Continuity)
See page BE-34.

(Taillight Control Relay/Continuity)
See page BE-34.

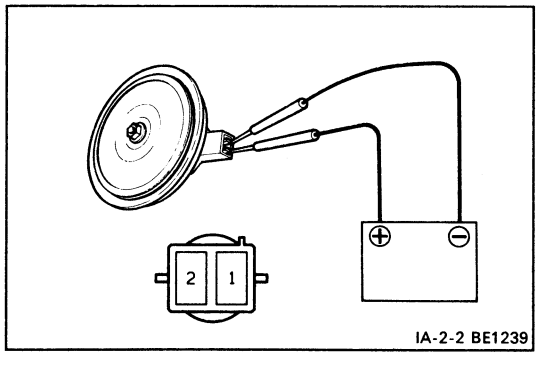

4. **INSPECT THEFT DETERRENT HORN**
(Operation)
(a) Connect the positive (+) lead from the battery to terminal 1 and the negative (–) lead to terminal 2.
(b) Check that the horn blows.

If operation is not as specified, replace the horn.

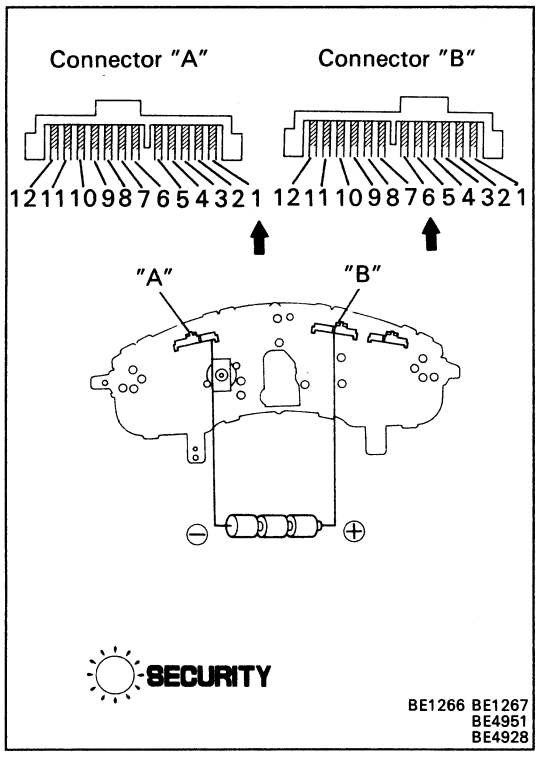

5. INSPECT THEFT DETERRENT INDICATOR LIGHT

(a) Connect a series of three 1.5 V dry cell batteries.

(b) Connect the positive (+) lead from the dry cell batteries to terminal 6 of connector "B" and the negative (–) lead to terminal 1 of connector "A".

(c) Check that the indicator light lights up.

If the indicator light does not light up, replace the indicator light.

AUDIO SYSTEM
Parts Location

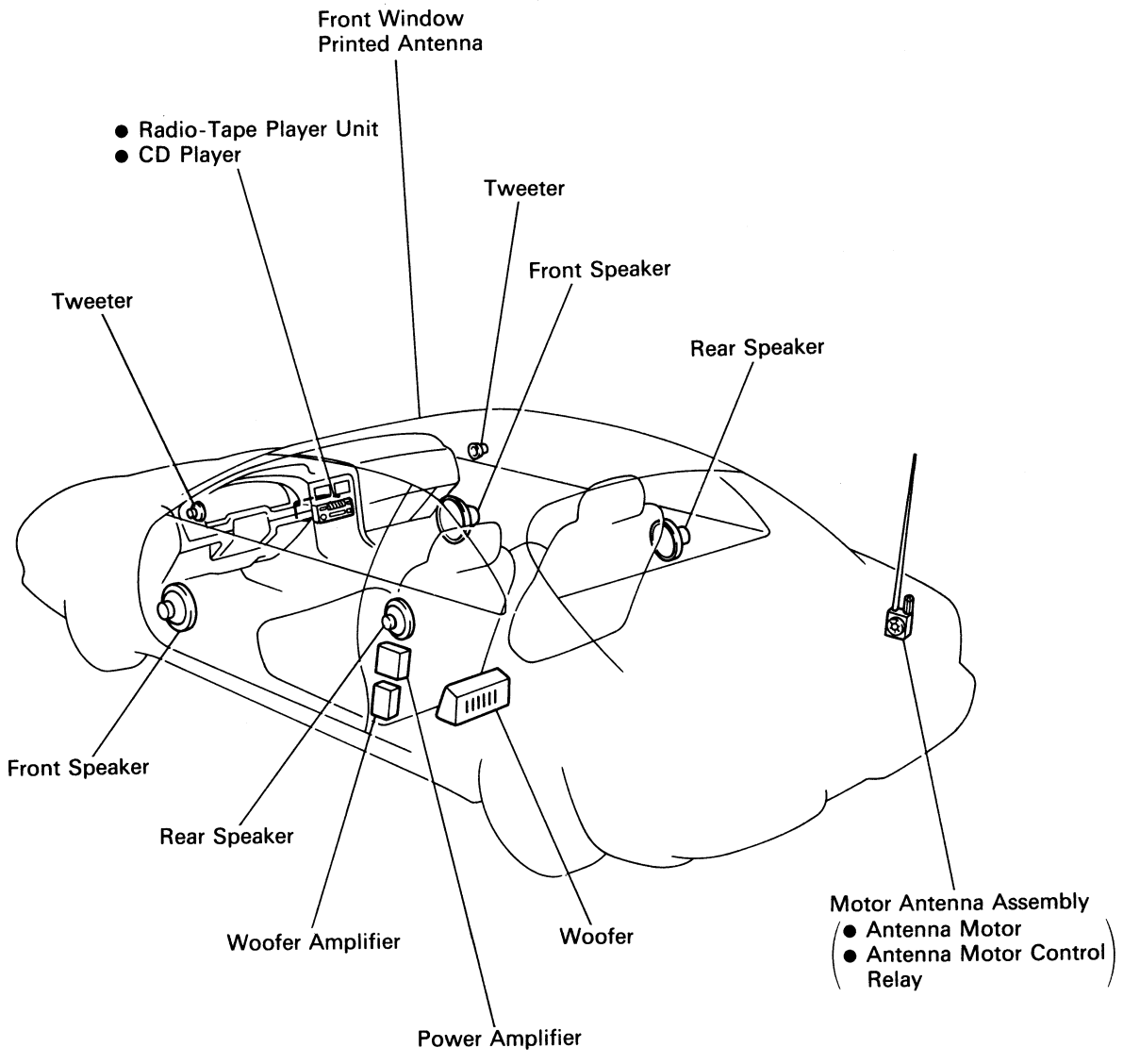

BE4700

Wiring and Connector Diagrams

Radio: Symbol R
Radio-Tape Player Unit (built-in Power Amplifier, w/o Woofer): Symbol U

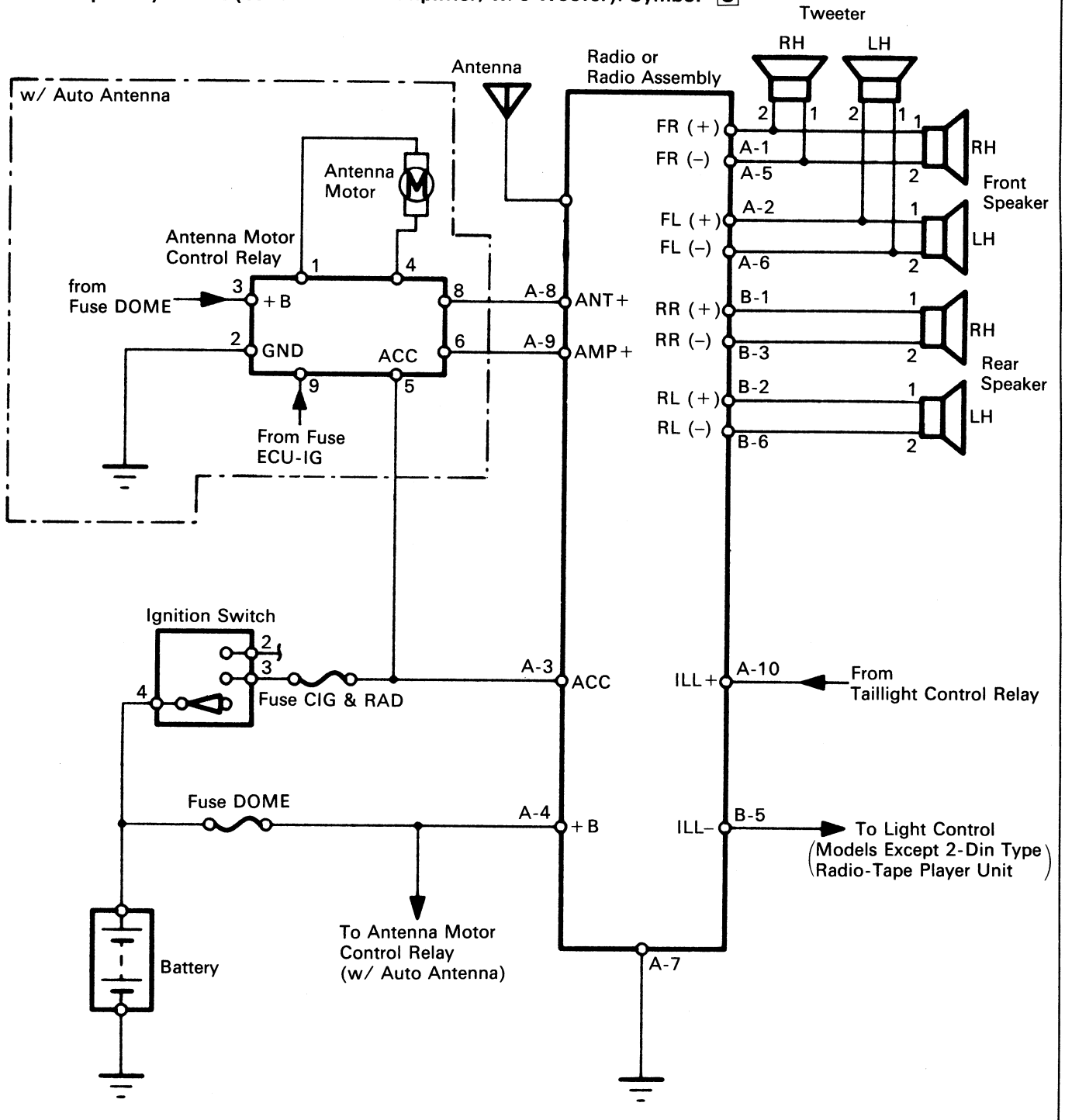

The POWER SOURCE CIRCUIT has been simplified. For full details, see page BE-9.

Radio Assembly Connector "A" | Connector "B" | Antenna Motor Control Relay | Front Speaker | Rear Speaker | Tweeter

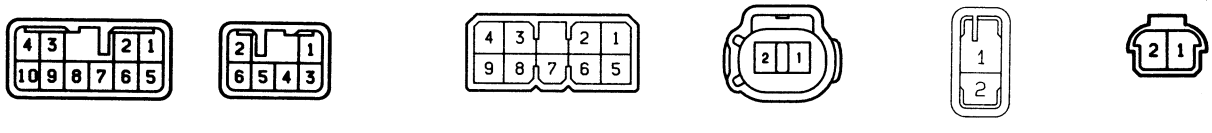

BE4686
S-10-2-A S-6-2-E G-9-2 Ie-2-2-J BE4123 GA-2-2-C

Radio-Tape Player Unit (built-in Power Amplifier, w/ Woofer): Symbol U

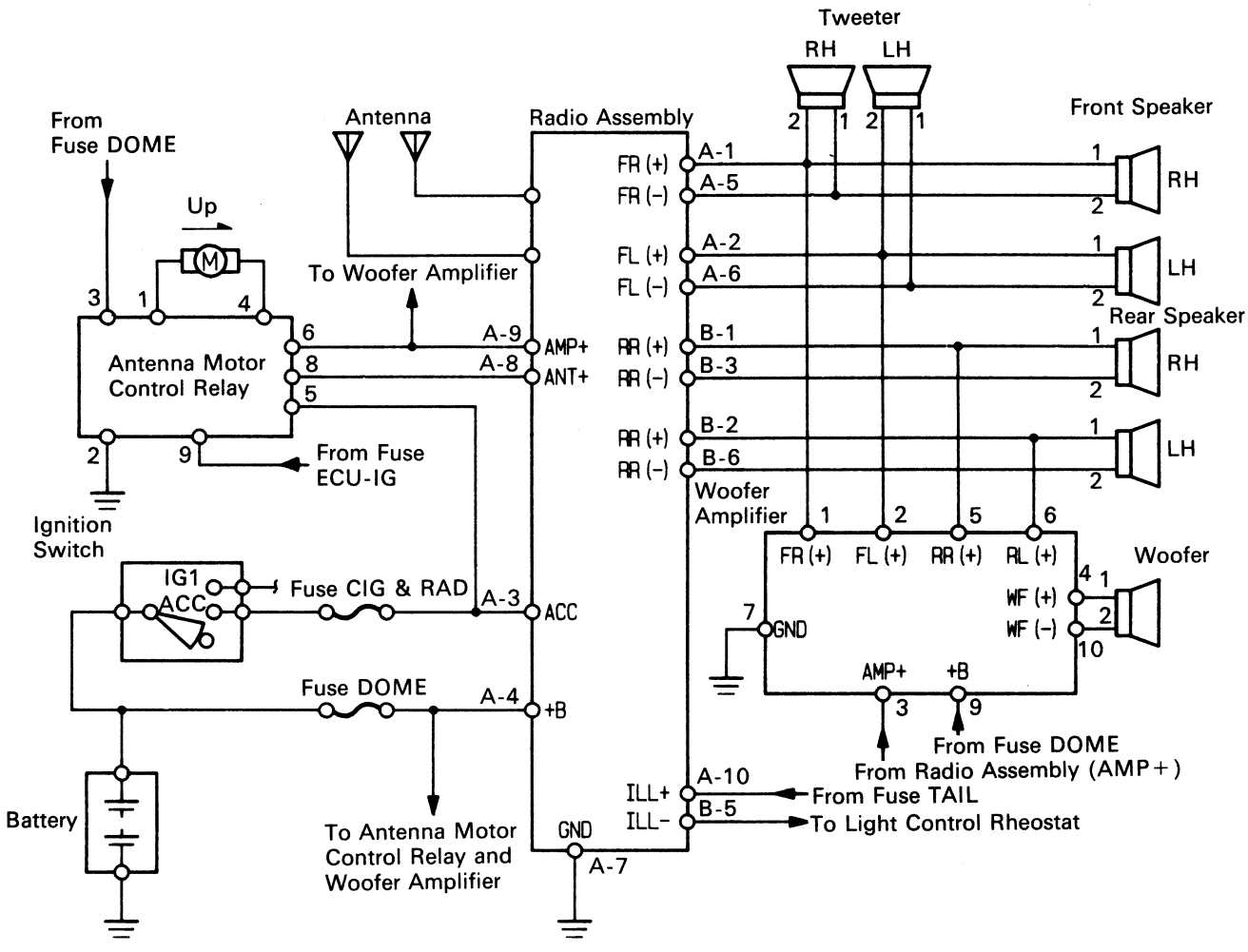

The POWER SOURCE CIRCUIT has been simplified. For full details, see page BE-9.

Radio Assembly Connector "A"

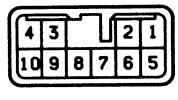

Connector "B"

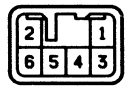

Woofer Amplifier

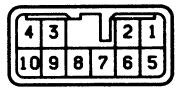

Antenna Motor Control Relay

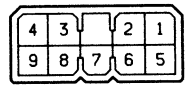

Front Speaker

Rear Speaker

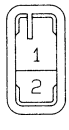

Tweeter

Woofer

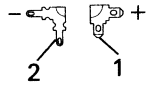

Radio-Tape Player Unit (Separate Power Amplifier, w/Woofer): Symbol [P]
Radio-Tape Player Unit + CD Player: Symbol [C]

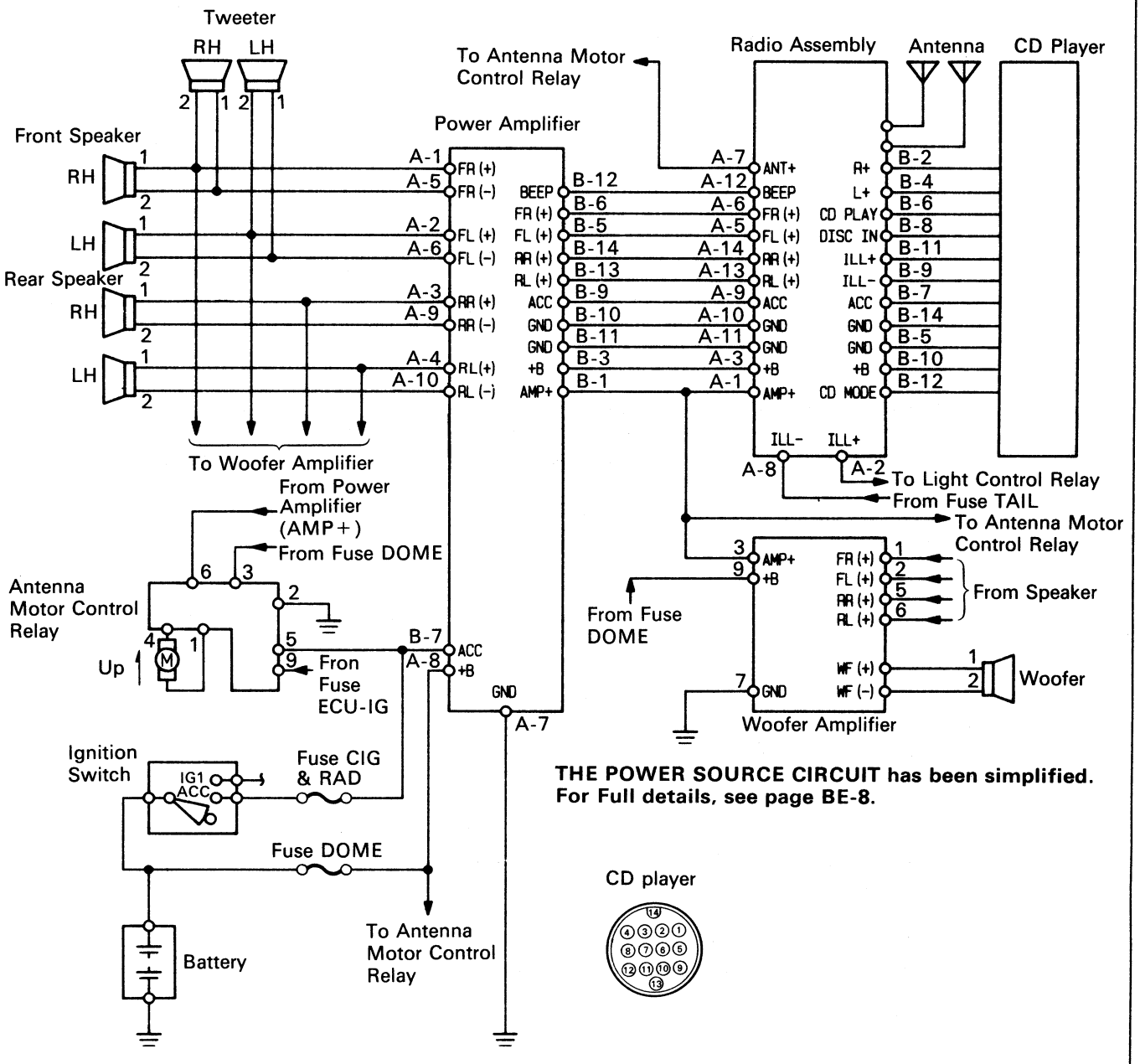

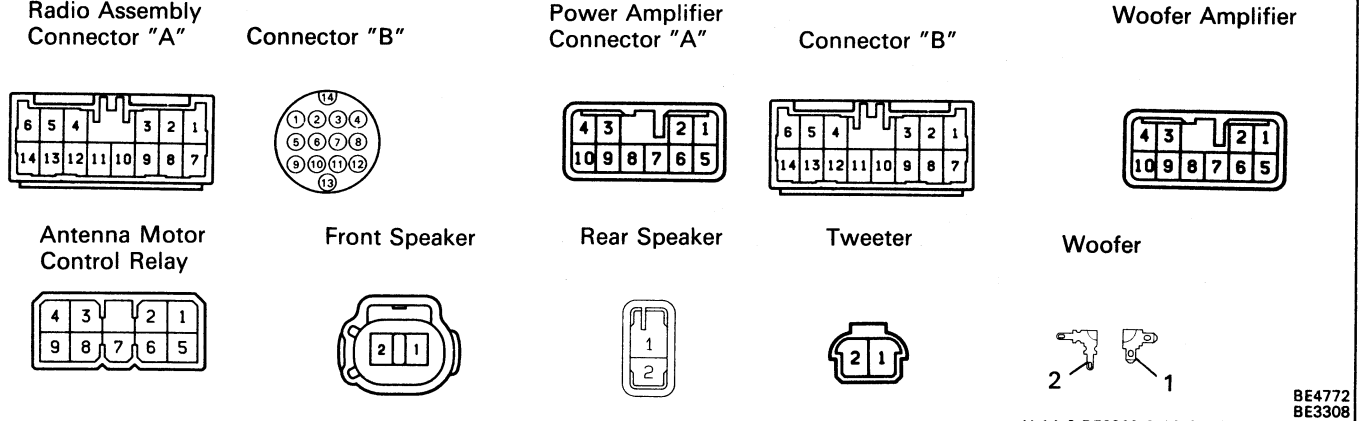

System Description

RADIO WAVE BAND

The radio wave bands used in radio broadcasting are as follows:

Frequency	30 kHz	300 kHz	3 MHz	30 MHz	300 MHz
Designation	LF	MF	HF	VHF	
Radio wave		AM ⟷		FM ⟷	
Modulation method	Amplitude modulation			Frequency modulation	

LF: Low Frequency MF: Medium Frequency HF: High Frequency VHF: Very High Frequency

SERVICE AREA

There is great difference in the size of the service area for AM, FM monaural, and FM stereo broadcasting. Thus it may happen that FM broadcast cannot be received even though AM comes in very clearly.
Not only does FM stereo have the smallest service area, but it also picks up static and other types of interference ("noise") the most easily.

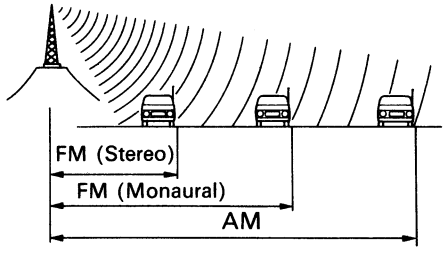

BE2818

RECEPTION PROBLEMS

Besides the problem of static, there are also the problems called "fading", "multipath", and "fade out". These problems care caused not by electrical noise but by the nature of the radio waves themselves.

Fading

Besides electrical interference, AM broadcasts are also susceptible to other types of interference, especially at night. This is because AM radio waves bounce off the ionosphere at night. These radio waves then interfere with the signals from the same transmitter that reach the vehicle's antenna directly. This type of interference is called "fading".

Fading

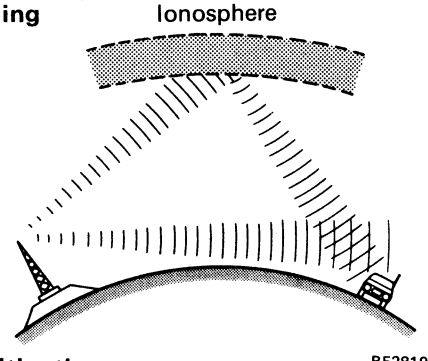

BE2819

Multipath

One type of interference caused by the bouncing of radio waves off of obstructions is called "multipath". Multipath occurs when a signal from the broadcast transmitter antenna bounces off of buildings and mountains and interferes with the signal that is received directly.

Multipath

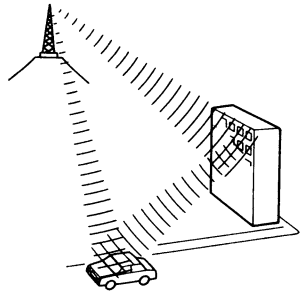

BE2820

Fade Out

Because FM radio waves are of higher frequencies than AM radio waves, they bounce off of buildings, mountains, and other obstructions. For this reason, FM signals often seem to gradually disappear or fade away as the vehicle goes behind a building or other obstruction. This is called "fade out".

Fade Out

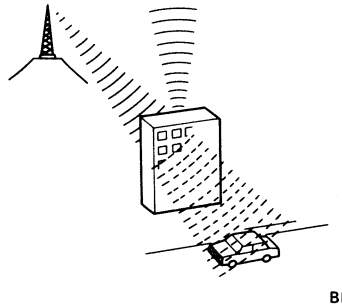

BE2821

COMPACT DISC PLAYER

Compact Disc (hereafter called "CD") players use a laser beam pick-up to read the digital signals recorded on the CD and reproduce analog signals of the music, etc. There are 4.7 in. (12 cm) and 3.2 in. (8 cm) CD available.

HINT: Never attempt to disassemble or oil any part of the player unit. Do not insert any object other than a disc into the slot.

NOTICE: CD players use invisible laser beam which could cause hazardous radiation explosure if directed. Be sure to operate the player correctly as instructed.

MAINTENANCE

(Tape Player)

Head Cleaning

(a) Raise the cassette door with your finger.
Next using a pencil or like object, push in the guide.

(b) Using a cleaning pen or cotton applicator soaked in cleaner, clean the head surface, pinch rollers and capstans.

Example:

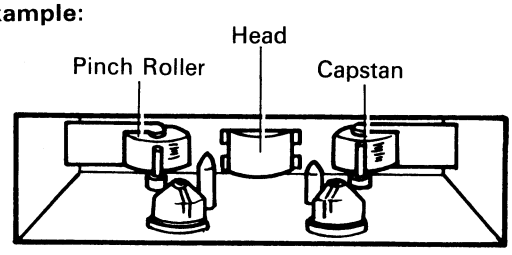

C0192

(CD Player)

Disc Cleaning

If the Disc gets dirty, clean the Disc by wiping the surfaces from the center to outside in the radial directions with a soft cloth.

NOTICE: Do not use a conventional record cleaner or anti-static record preservative.

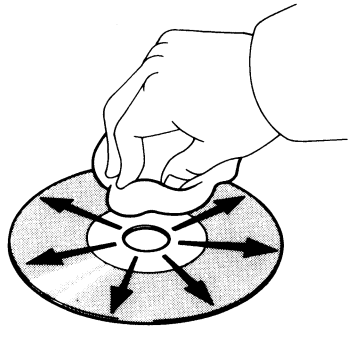

BE4331

AUDIO TYPES

Example:

Radio

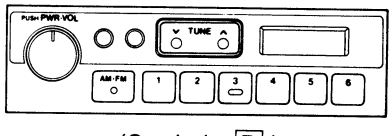

(Symbol: R)

BE4332

Radio-Tape Player Unit Radio
1-Din Type

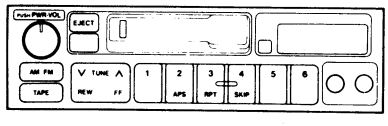

(Symbol: Built-in Power Amplifier U
: Separate Power Amplifier P)

BE4336

2-Din Type

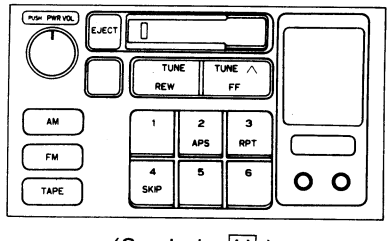

(Symbol: U)

BE4333

Radio-Tape Player Unit + CD Player

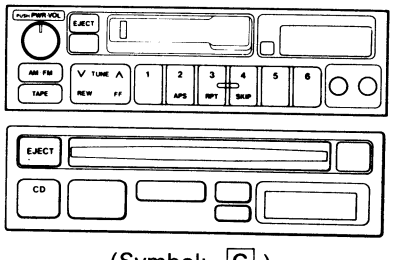

(Symbol: C)

BE4336
BE4335

HOW TO USE DIAGNOSTIC CHART

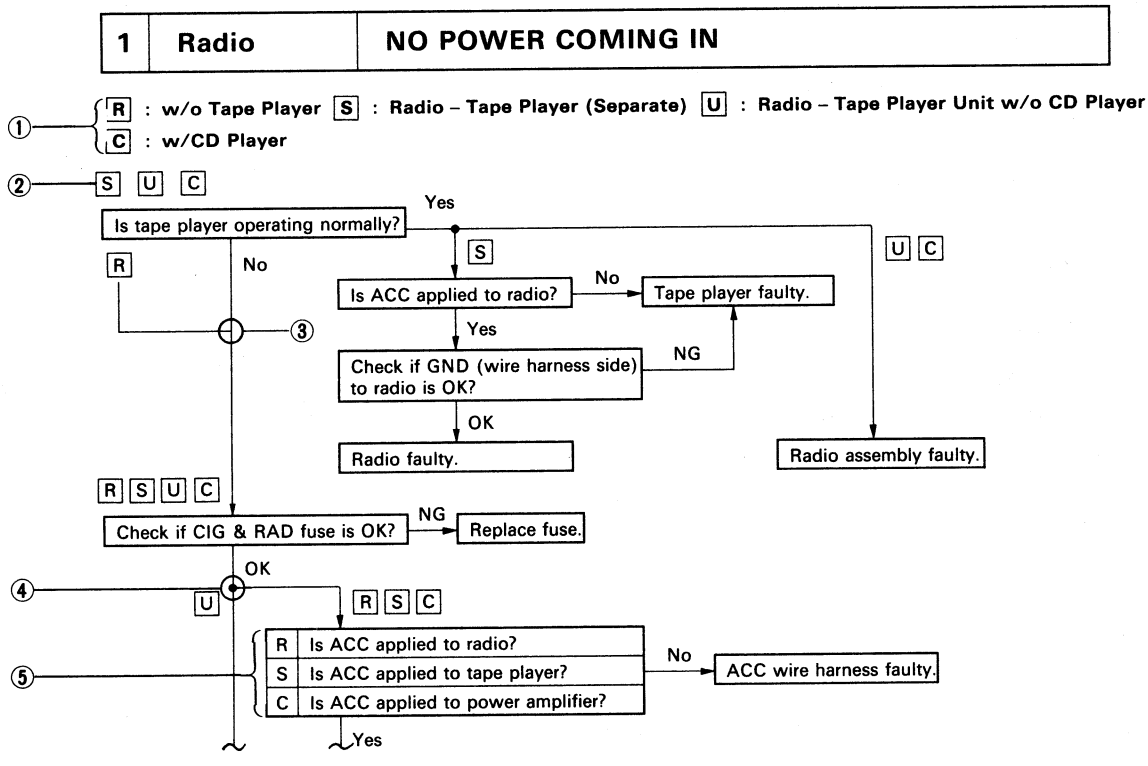

① Audio system type and symbol used.
HINT: Confirm the applicable type of audio system. (See page BE-137).

② Symbol for type of audio system the question applies to.
HINT: If the audio system type is not applicable, proceed to next question below.

③ Junction without black circle.
HINT: Proceed to next question below.

④ Junction with black circle.
HINT: Proceed to question for applicable audio system type.

⑤ HINT: Select question for applicable audio system type.

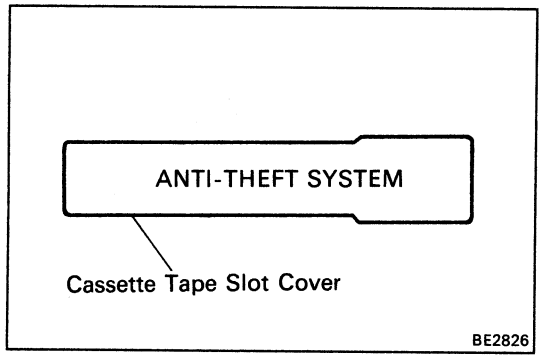

Anti-Theft System

The anti-theft system is only provided for audio systems equipped with an Acoustic Flavor function.

HINT: The words "ANTI-THEFT SYSTEM" are displayed on the cassette tape slot cover.
For operation instructions for the anti-theft system, please consult the audio system section in the Owner's Manual.

1. SETTING SYSTEM

The system is in operation once the customer has pushed the required buttons and entered the customer-selected 3-digit ID number.

(Refer to the Owner's Manual "SETTING THE ANTI-THEFT SYSTEM")

HINT:

- When the audio system is shipped the ID number has not been input, so the anti-theft system is not in operation.
- If the ID number has not been input, the audio system remains the same as a normal audio system.

2. ANTI-THEFT SYSTEM OPERATION

If the normal electrical power source (connector or battery terminal) is cut off, the audio system becomes inoperable, even if the power supply resumes.

3. CANCELLING SYSTEM

The ID number chosen by the customer is input to cancel the anti-theft system.

(Refer to the Owner's Manual "IF THE SYSTEM IS ACTIVATED")

HINT: To change or cancel the ID number, please refer to the owner's Manual "CANCELLING THE SYSTEM".

Troubleshooting

NOTICE: When replacing the internal mechanism (computer part) of the audio system, be careful that no part of your body or clothing comes in contact with the terminals of the leads from the IC, etc. of the replacement part (spare part).

HINT: This inspection procedure is a simple troubleshooting which should be carried out on the vehicle during system operation and was prepared on the assumption of system component troubles (except for the wires and connectors, etc.).
Always inspect the trouble taking the following items into consideration.

- Open or short circuit of the wire harness
- Connector or terminal connection fault
- For audio systems with anti-theft system, troubleshooting items marked (*) indicate that "Troubleshooting for ANTI-THEFT SYSTEM" should be carried out first.

Problem		No.
Radio	No power coming in.	*1
	Power coming in, but radio not operating.	*2
	Noise present, but AM – FM not operating.	3
	Either speaker does not work.	4
	Either AM or FM does not work.	5
	Reception poor (Volume faint).	5
	Few preset tuning bands.	5
	Sound quality poor.	6
	Cannot set station select button.	7
	Preset memory disappears.	7
Tape Player	Cassette tape cannot be inserted.	8
	Cassette tape inserts, but no power.	*9
	Power coming in, but tape player not operating.	10
	Either speaker does not work.	11
	Sound quality poor (Volume faint).	12
	Tape jammed, malfunction with tape speed or auto-reverse.	13
	APS, SKIP, RPT buttons not operating.	14
	Cassette tape will not eject.	*15
CD Player	CD cannot be inserted.	16
	CD inserts, but no power.	17
	Power coming in, but CD player not operating.	18
	Sound jumps.	19
	Sound quality poor (Volume faint).	20
	Either speaker does not work.	21
	CD will not eject.	22
Antenna	Antenna – related.	23
Noise	Noise produced by vibration or shock while driving.	24
	Noise produced when engine starts.	25

TROUBLESHOOTING FOR ANTI-THEFT SYSTEM

Turn ignition key from LOCK position to ACC position.

Display "A" showing?
- No → Radio switch turned ON.
  - Display "B" showing?
    - No → ID number not input. (Display "D")
      - Refer to each malfunction item.
    - Yes → While holding the 1, 4 and 6 buttons in. Push and hold the "PWR VOL" knob. Check display.
      - Display "B" → Go to No.1.
      - Display "E" → ANTI-THEFT SYSTEM operating condition. (ID number input error 5 times) Take to designated radio service station.
- Yes → ID number is set.

"SEC" display disappears after 1 second.
- Yes → Normal operation when radio switch turned ON.
  - Yes → Forgot to press switch.
  - No → Cancel ID number, refer to each malfunction item.
- No → ANTI-THEFT SYSTEM operating condition. (ID number input error 4 times or less)

Input ID number, check display.
- Display "D" → ANTI-THEFT SYSTEM cancelled. Check audio system again.
  - OK → ID number not input, or else input error.
  - NG → Cancel ID number, refer to each malfunction item.
- Display "A" or "B" → Take to designated radio service station.
- Display "C" → "A" (After 2 seconds)

ANTI-THEFT SYSTEM not cancelled. ID number input 5 times or more?
- No → Input ID number, check display.
- Yes → Take to designated radio service station.

(Liquid Crystal Display (LCD) for Audio System)

Display "A"

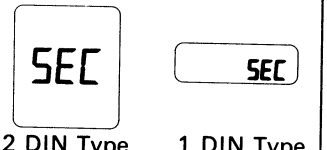

2 DIN Type 1 DIN Type

BE2810 BE2814

Display "B"

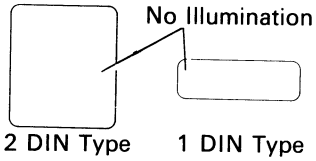

2 DIN Type 1 DIN Type

BE2811 BE2815

Display "C"

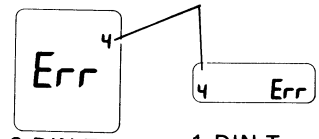

2 DIN Type 1 DIN Type

BE2812 BE2816

Display "D" Example:

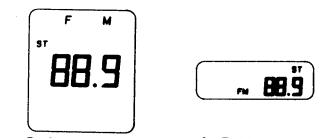

2 DIN Type 1 DIN Type

BE2813 BE2817

Display "E"

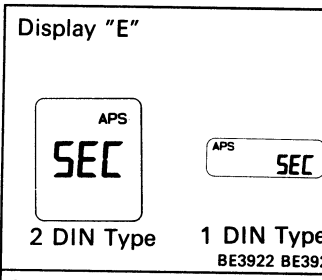

2 DIN Type 1 DIN Type

BE3922 BE3923

HINT:

- Refer to Owner's Manual for operation details of ANTI-THEFT SYSTEM.
- When the ID number has been cancelled, reset the same number after completing the operation, or inform the customer that it has been cancelled.

1 Radio — NO POWER COMING IN

[R] : Radio [U] : Radio – Tape Player Unit (Built-in Power Amplifier)
[P] : Radio – Tape Player Unit (Separate Power Amplifier)

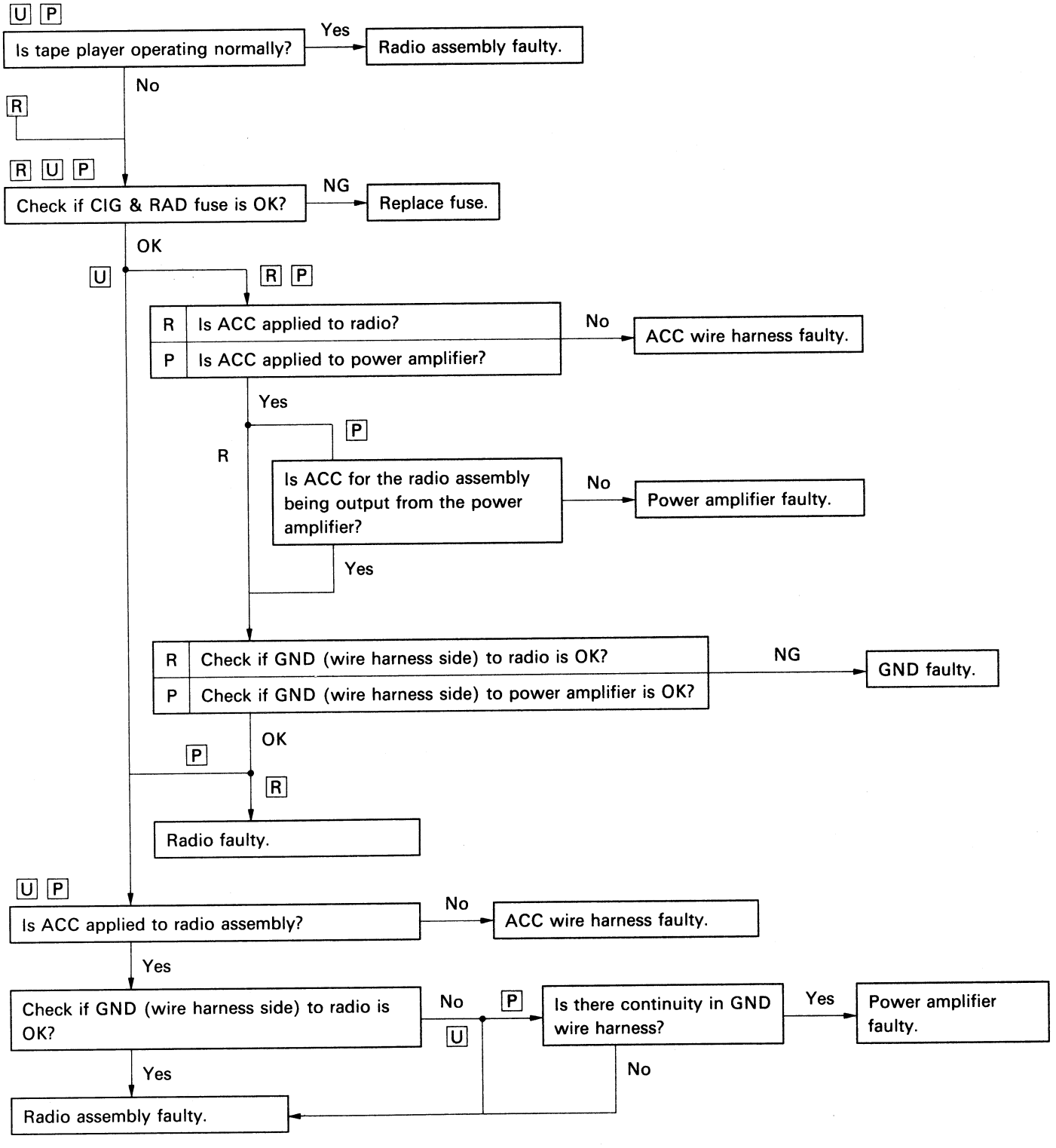

2 Radio — POWER COMING IN, BUT RADIO NOT OPERATING

[R] : Radio [U] : Radio – Tape Player Unit (Built-in Power Amplifier)
[P] : Radio – Tape Player Unit (Separate Power Amplifier)
[A] : Antena w/o Motor [M] : Motor Antenna [D] : Motor Antenna and Glass Printed Antenna

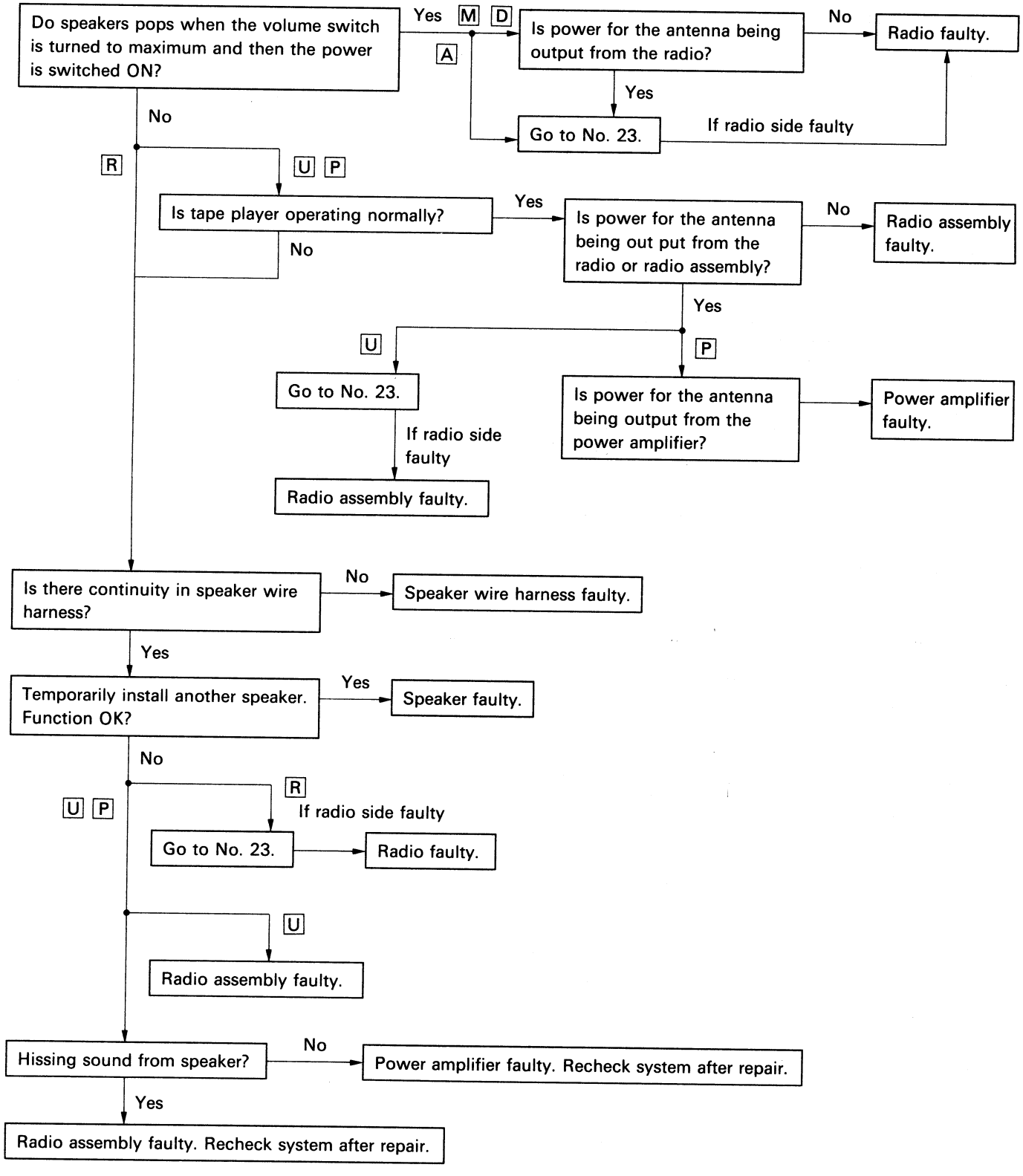

3 Radio — NOISE PRESENT, BUT AM-FM NOT OPERATING

[R] : Radio **[U] : Radio – Tape Player Unit (Built-in Power Amplifier)**
[P] : Radio – Tape Player Unit (Separate Power Amplifier)

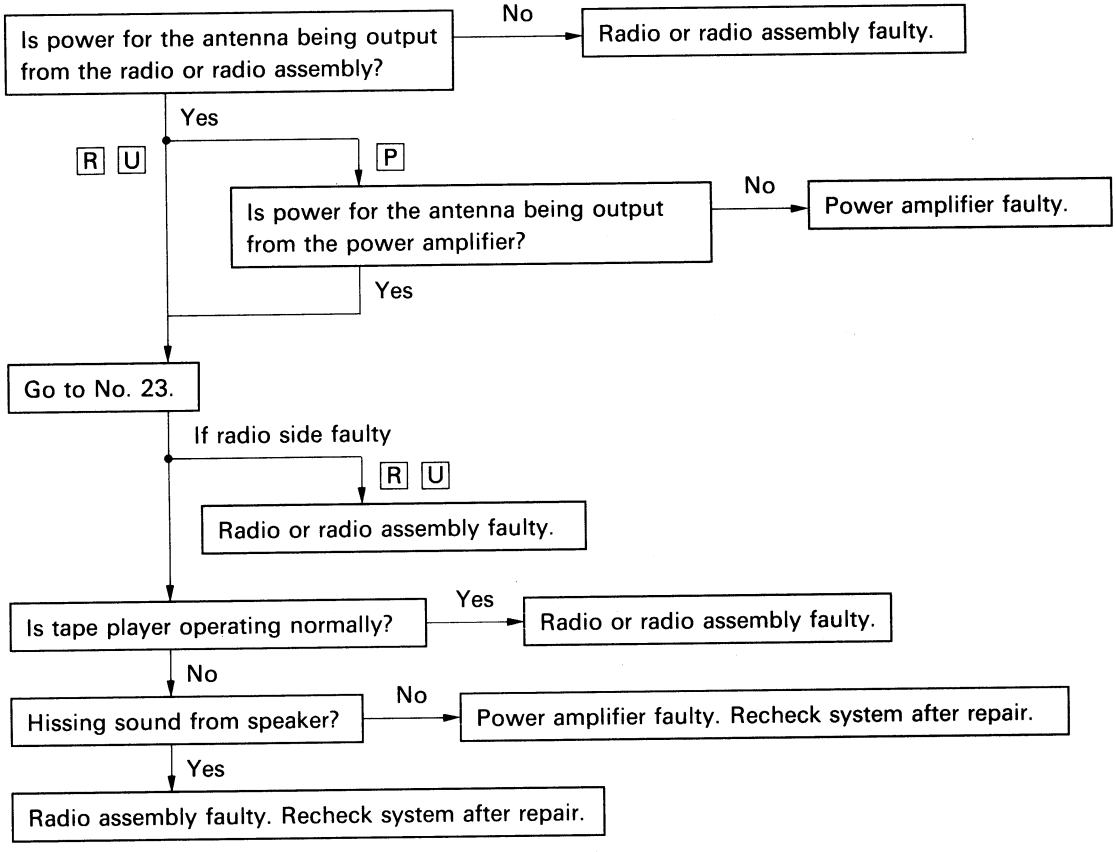

4 Radio — EITHER SPEAKER DOES NOT WORK

[R] : Radio **[U] : Radio – Tape Player Unit (Built-in Power Amplifier)**
[P] : Radio – Tape Player Unit (Separate Power Amplifier)

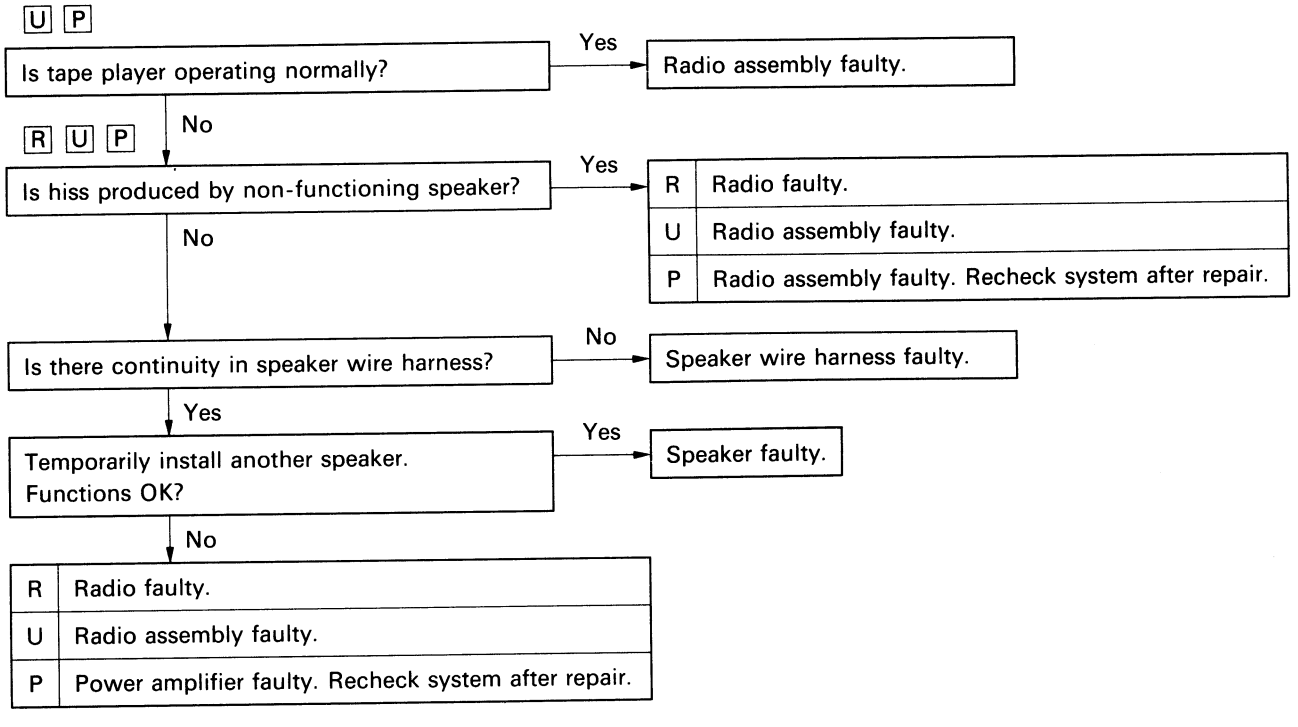

5	Radio	EITHER AM OR FM DOES NOT WORK, RECEPTION POOR (VOLUME FAINT), FEW PRESET TUNING BANDS

[R] : Radio [U] : Radio – Tape Player Unit (Built-in Power Amplifier)
[P] : Radio – Tape Player Unit (Separate Power Amplifier)

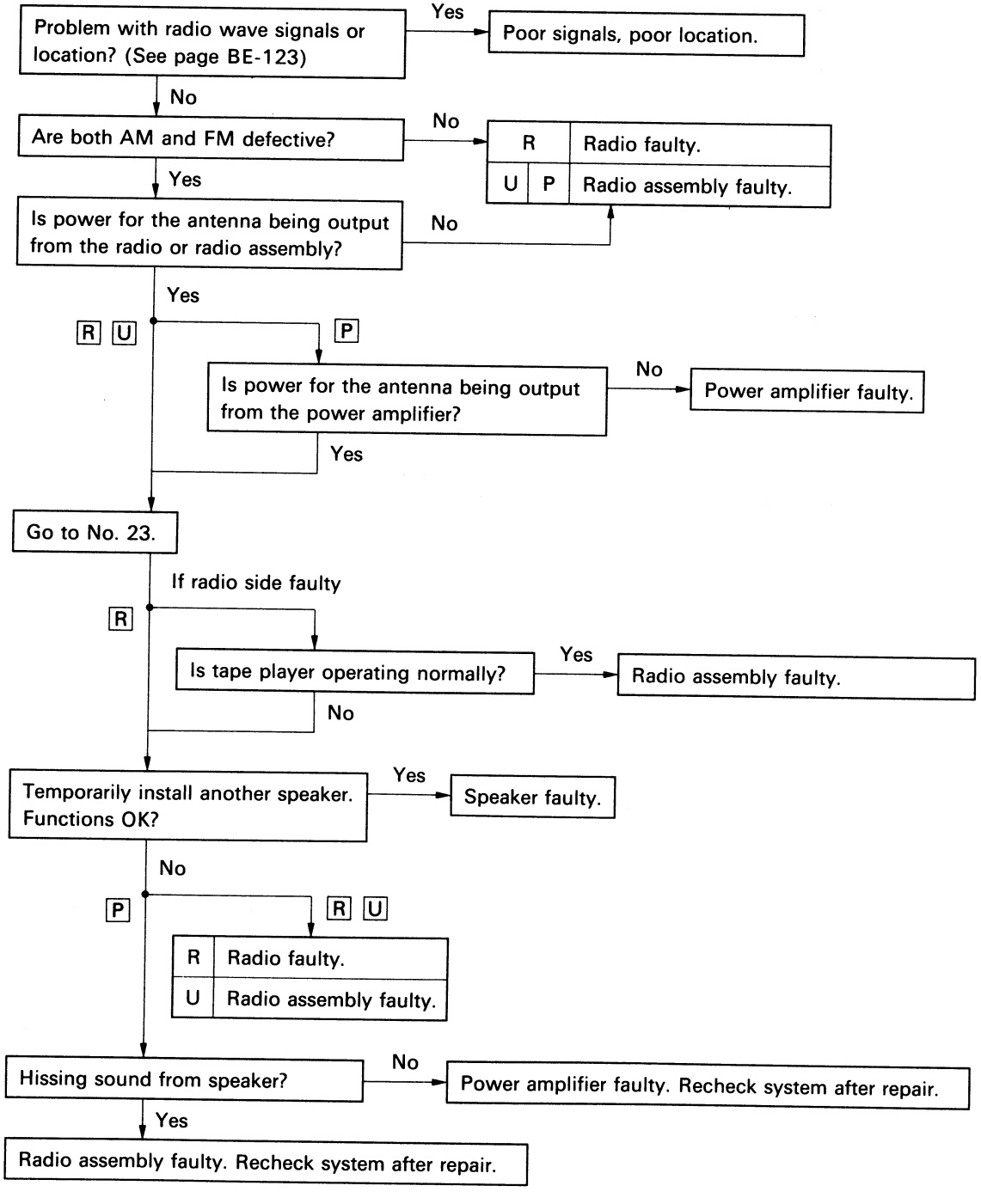

6 Radio — SOUND QUALITY POOR

[R] : Radio [U] : Radio – Tape Player Unit (Built-in Power Amplifier)
[P] : Radio – Tape Player Unit (Separate Power Amplifier)

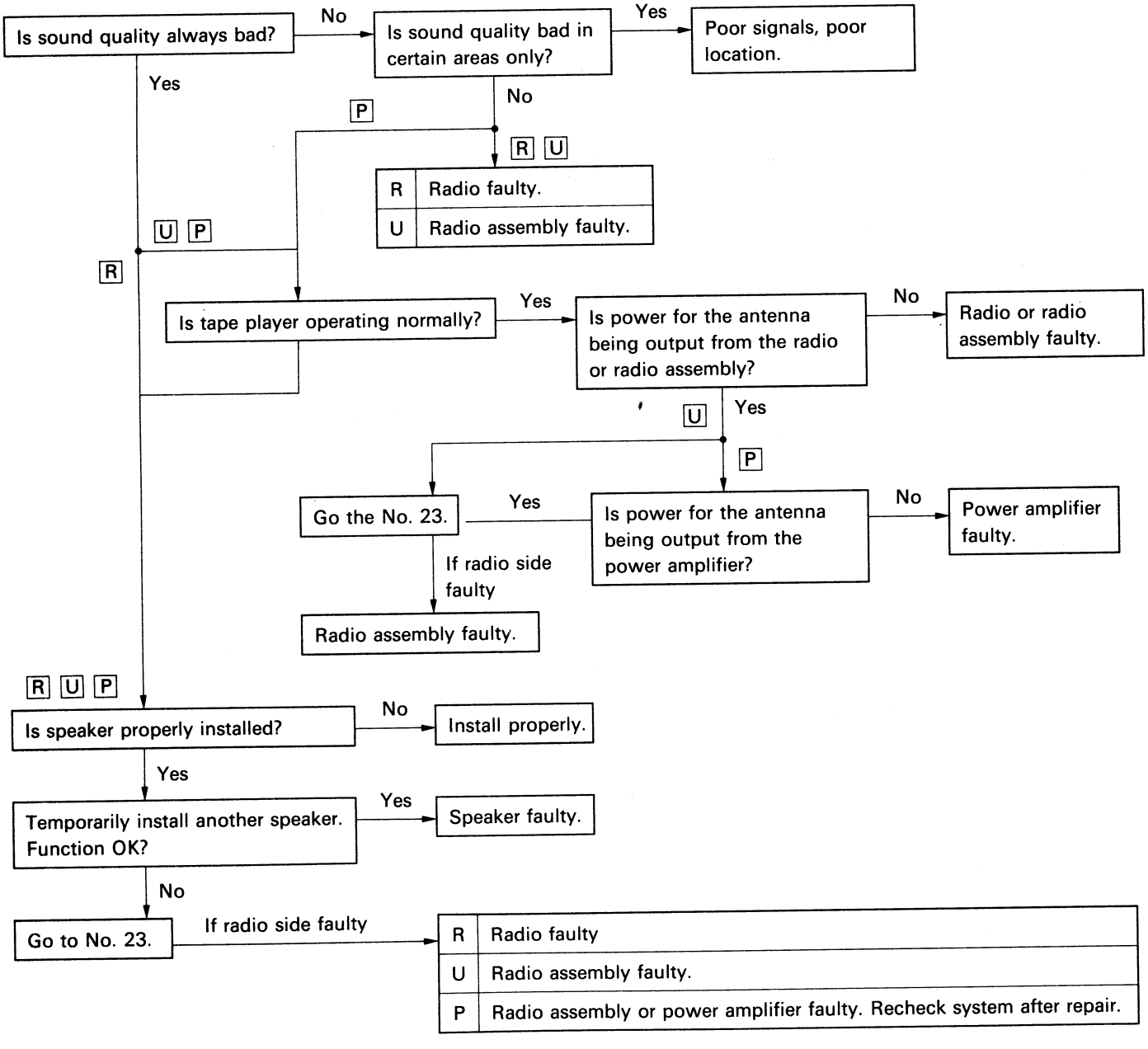

7	Radio	CANNOT SET STATION SELECT BUTTON, PRESET MEMORY DISAPPEARS

[R] : Radio [U] : Radio – Tape Player Unit (Built-in Power Amplifier)
[P] : Radio – Tape Player Unit (Separate Power Amplifier)

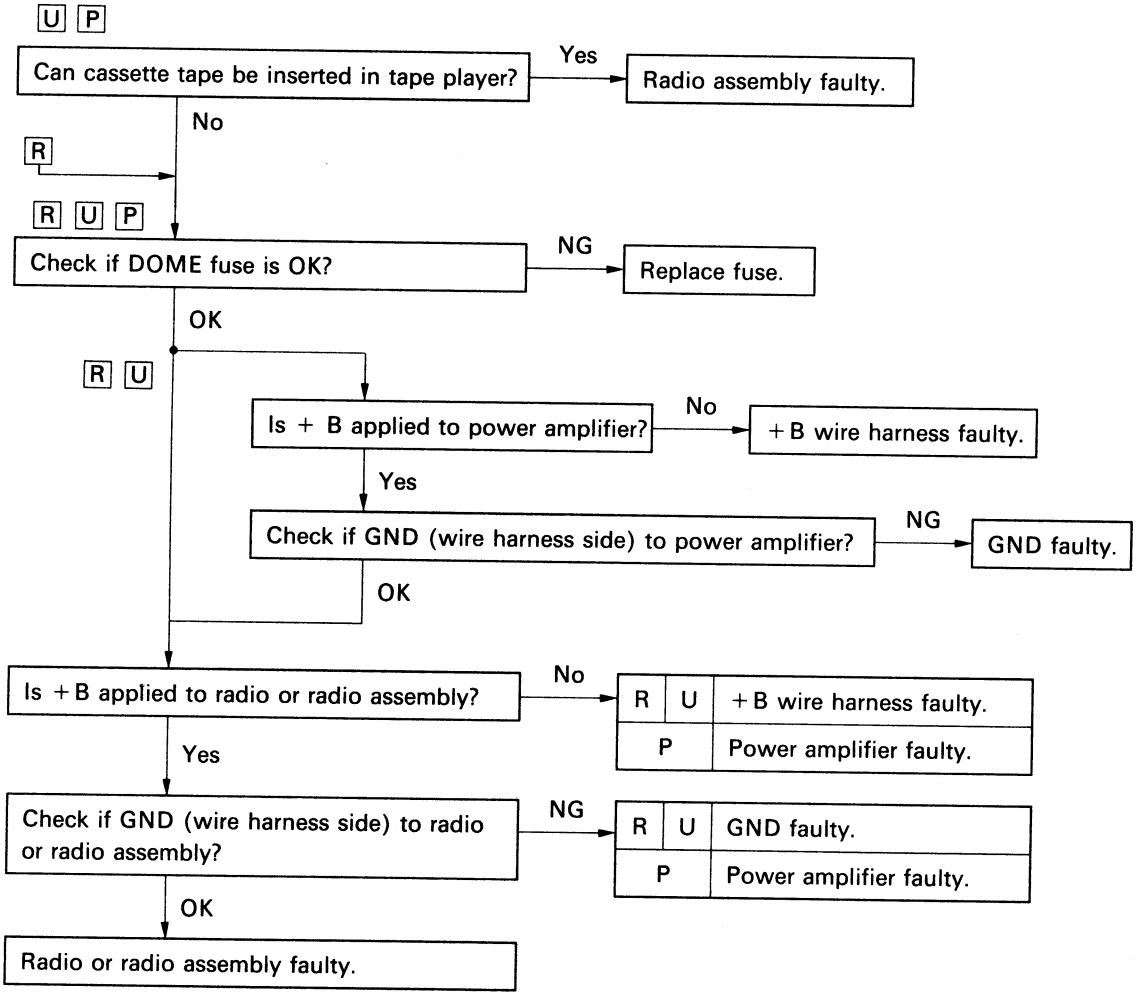

8 Tape Player | CASSETTE TAPE CANNOT BE INSERTED

[U] : Radio – Tape Player Unit (Built-in Power Amplifier)
[P] : Radio – Tape Player Unit (Separate Power Amplifier)

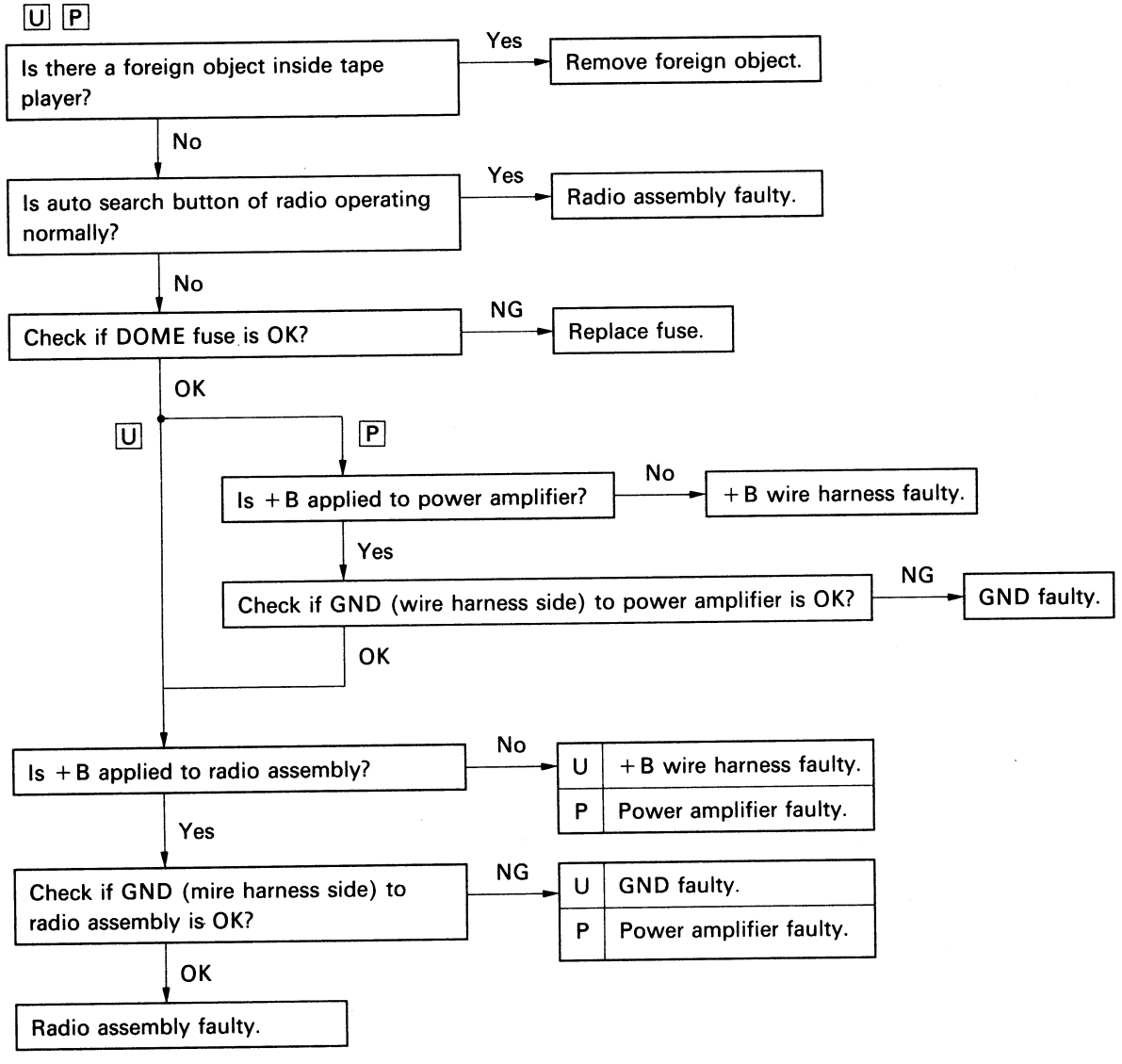

9	Tape Player	CASSETTE TAPE INSERTS, BUT NO POWER

[U] : Radio – Tape Player Unit (Built-in Power Amplifier)
[P] : Radio – Tape Player Unit (Separate Power Amplifier)

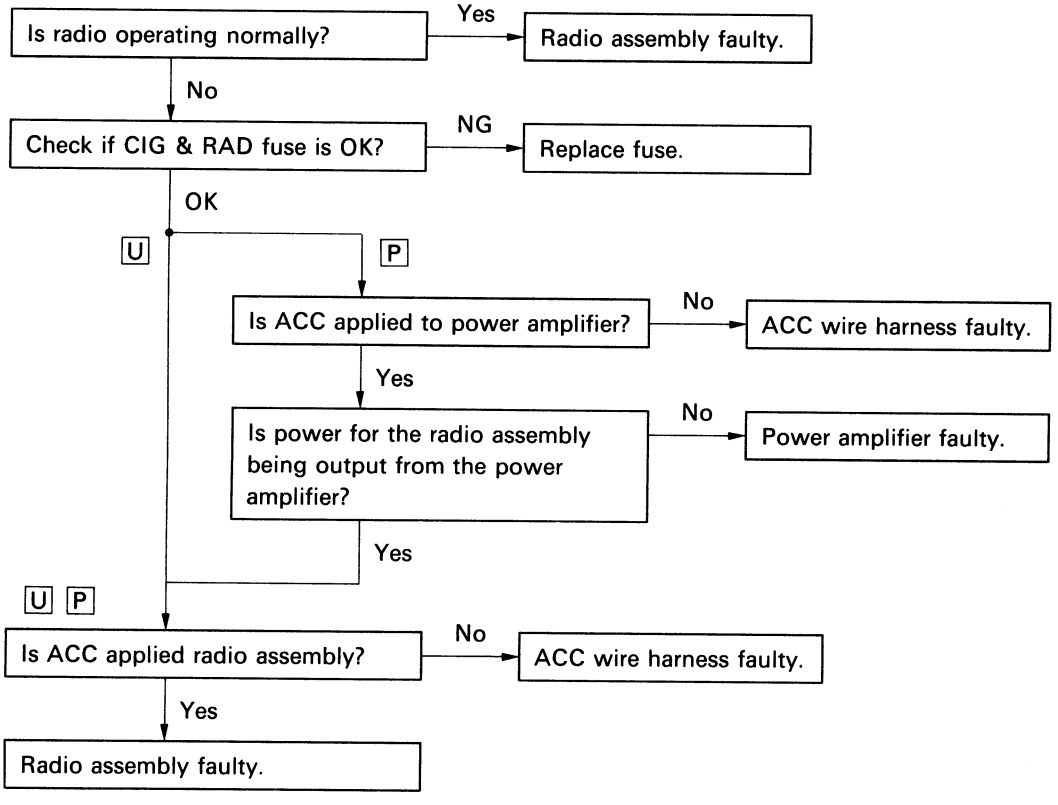

10 Tape Player — POWER COMING IN, BUT TAPE PLAYER NOT OPERATING

[U] : Radio – Tape Player Unit (Built-in Power Amplifier)
[P] : Radio – Tape Player Unit (Separate Power Amplifier)

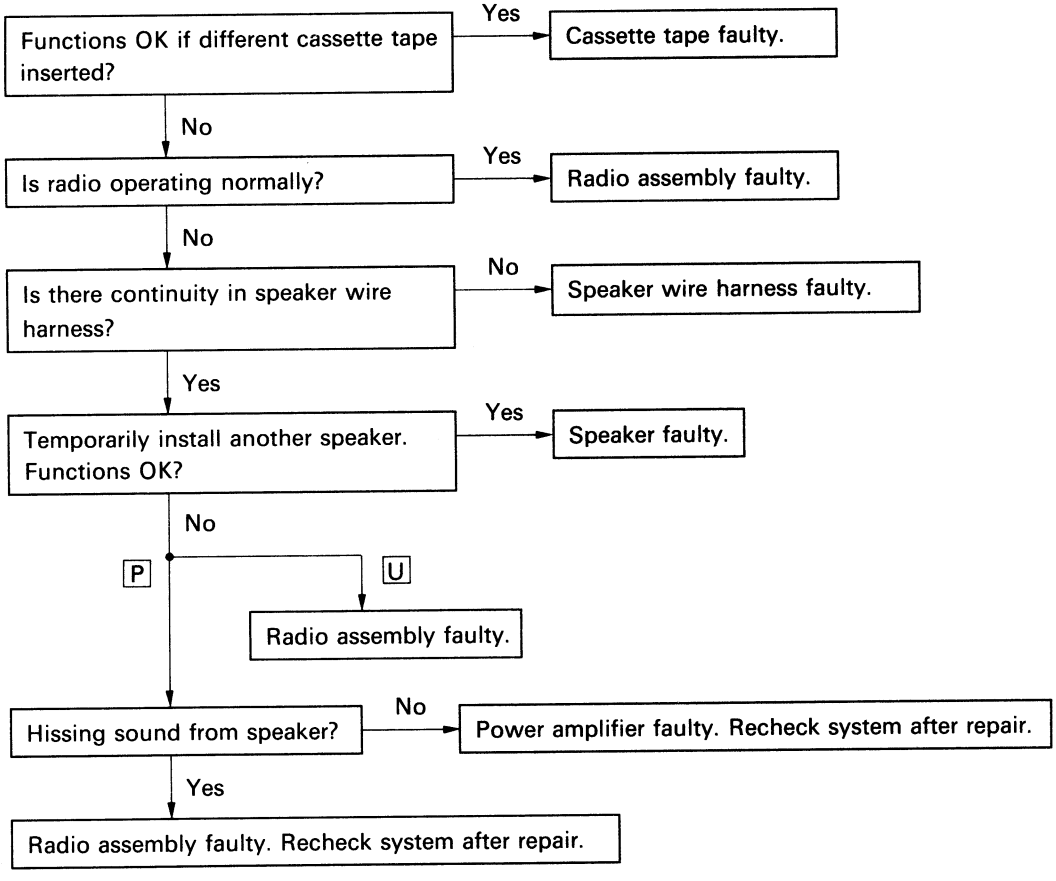

11 Tape Player — EITHER SPEAKER DOES NOT WORK

[U] : Radio – Tape Player Unit (Built-in Power Amplifier)
[P] : Radio – Tape Player Unit (Separate Power Amplifier)

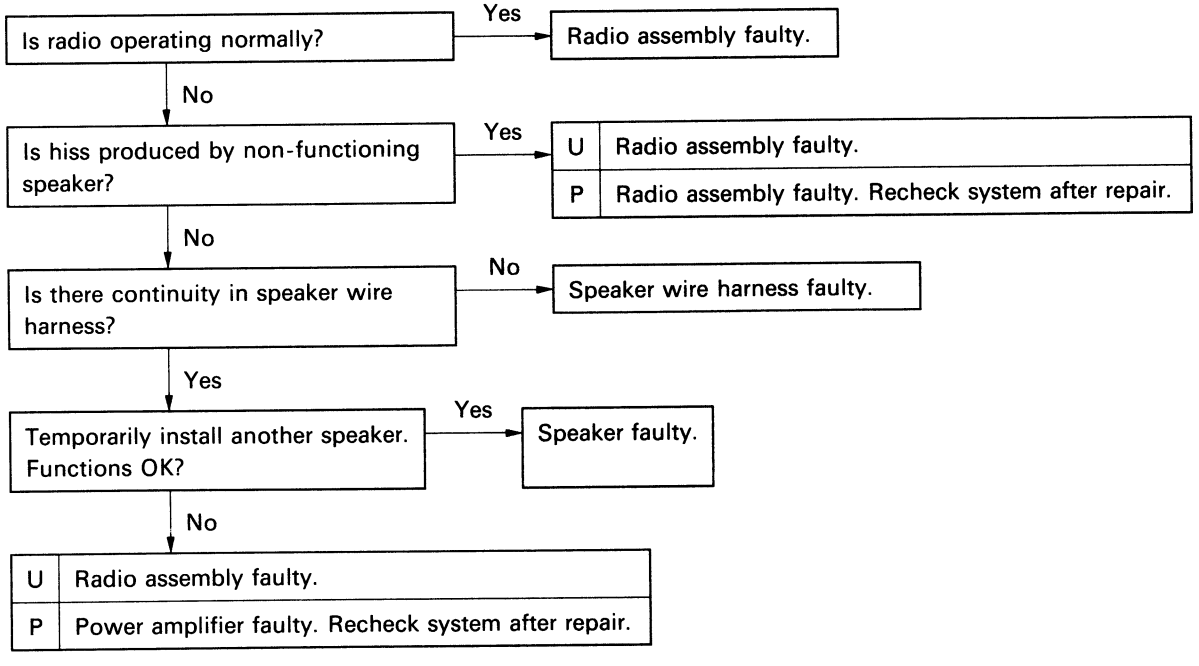

12 Tape Player SOUND QUALITY POOR (VOLUME PAINT)

U : Radio – Tape Player Unit (Built-in Power Amplifier)
P : Radio – Tape Player Unit (Separate Power Amplifier)

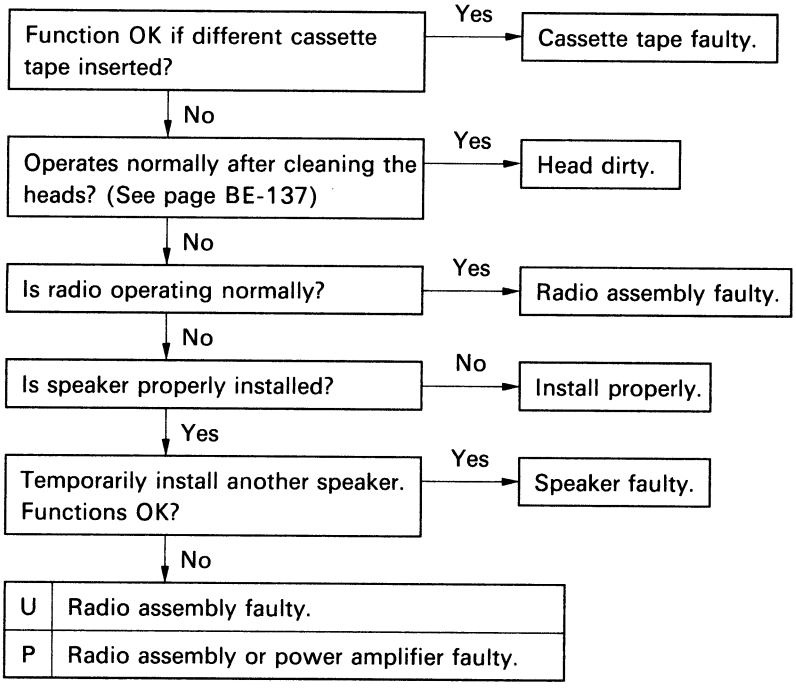

13 Tape Player TAPE JAMMED, MALFUNCTION WITH TAPE SPEED OR AUTO-REVERSE

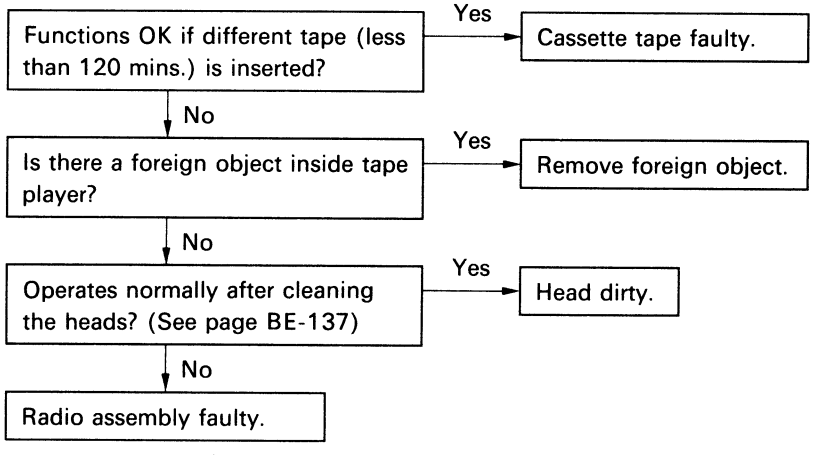

14 Tape Player APS, SKIP, RPT BUTTONS NOT OPERATING

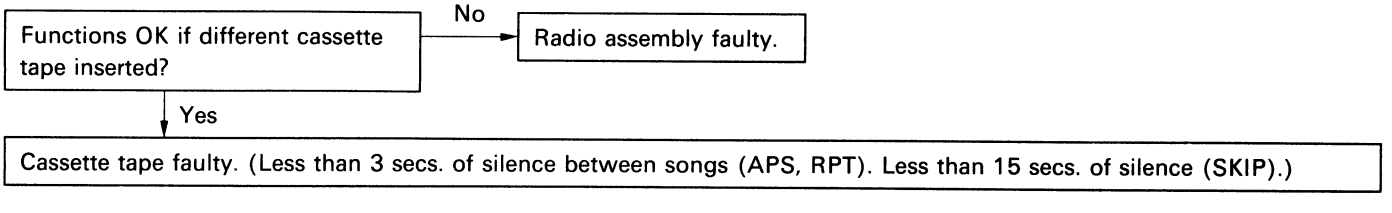

15	Tape Player	CASSETTE TAPE WILL NOT EJECT

[U] : Radio – Tape Player Unit (Built-in Power Amplifier)
[P] : Radio – Tape Player Unit (Separate Power Amplifier)

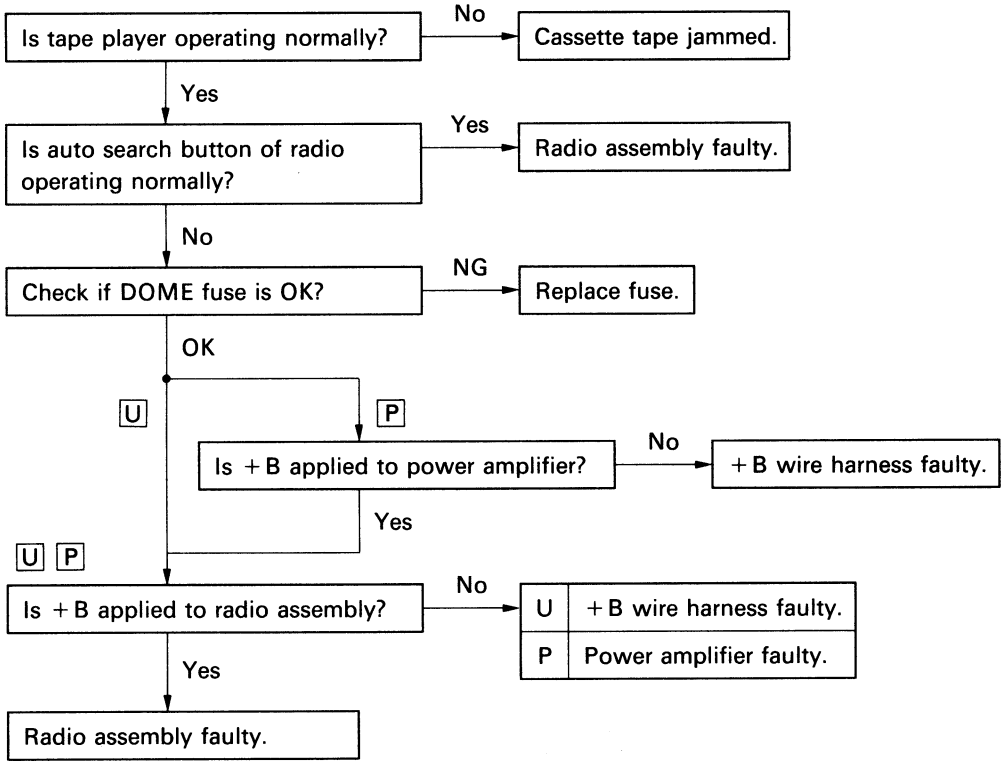

16 CD Player — CD CANNOT BE INSERTED

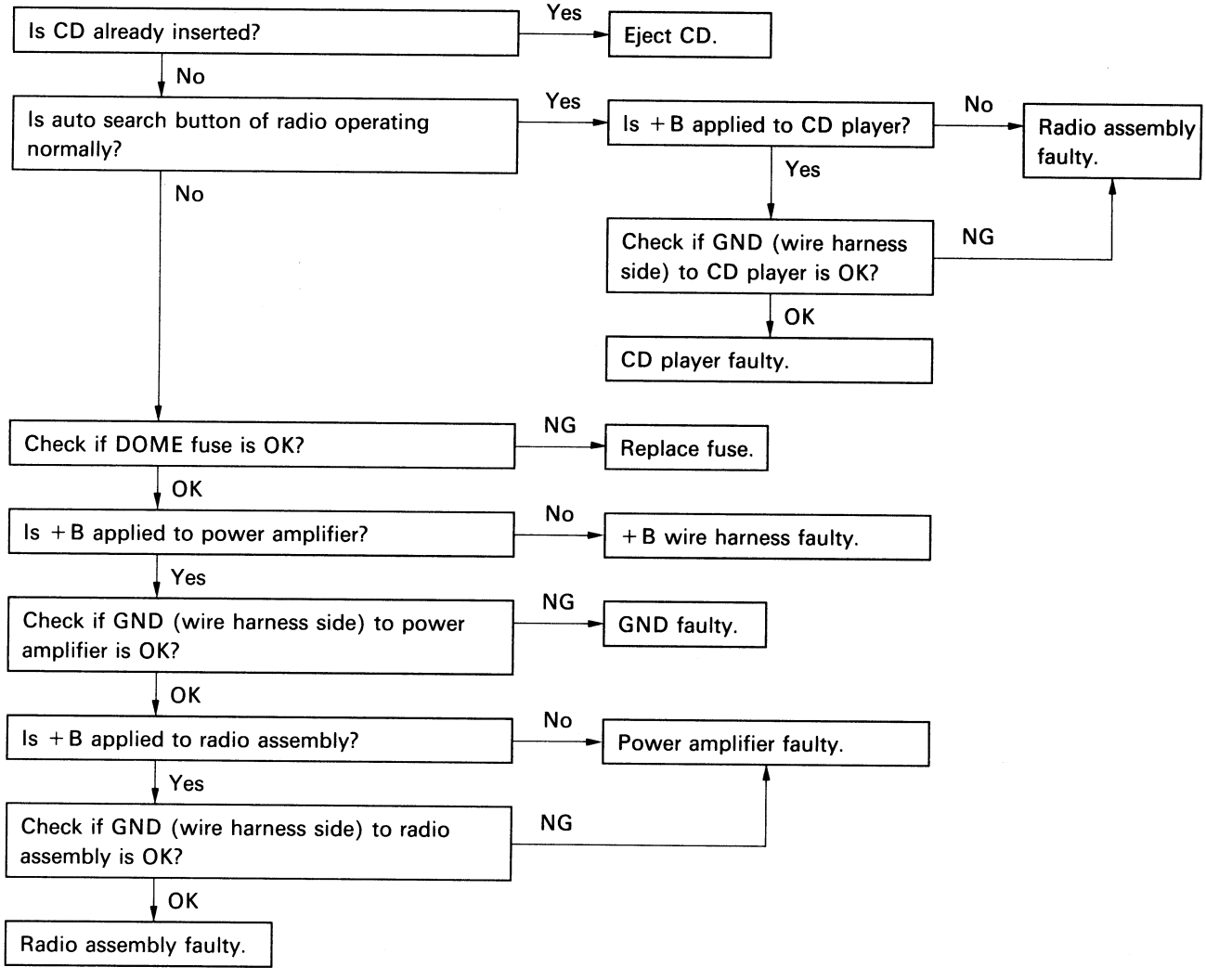

17 CD Player — CD INSERTS, BUT NO POWER

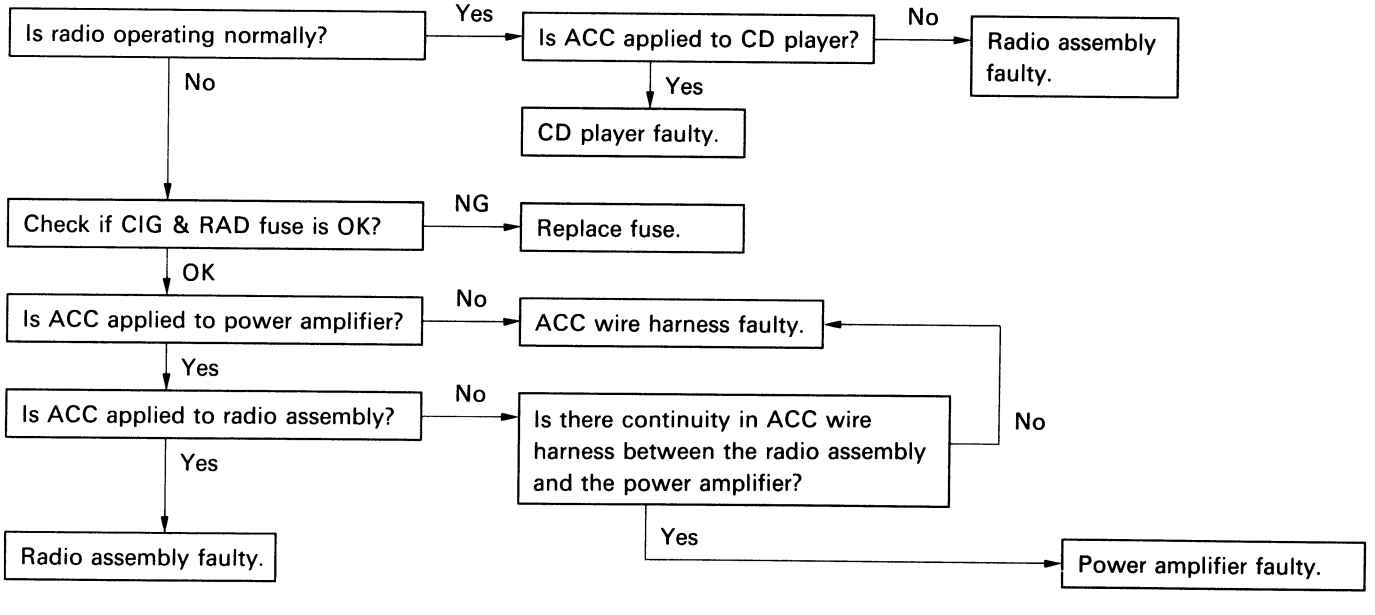

18 CD Player — POWER COMING IN, BUT CD PLAYER NOT OPERATING

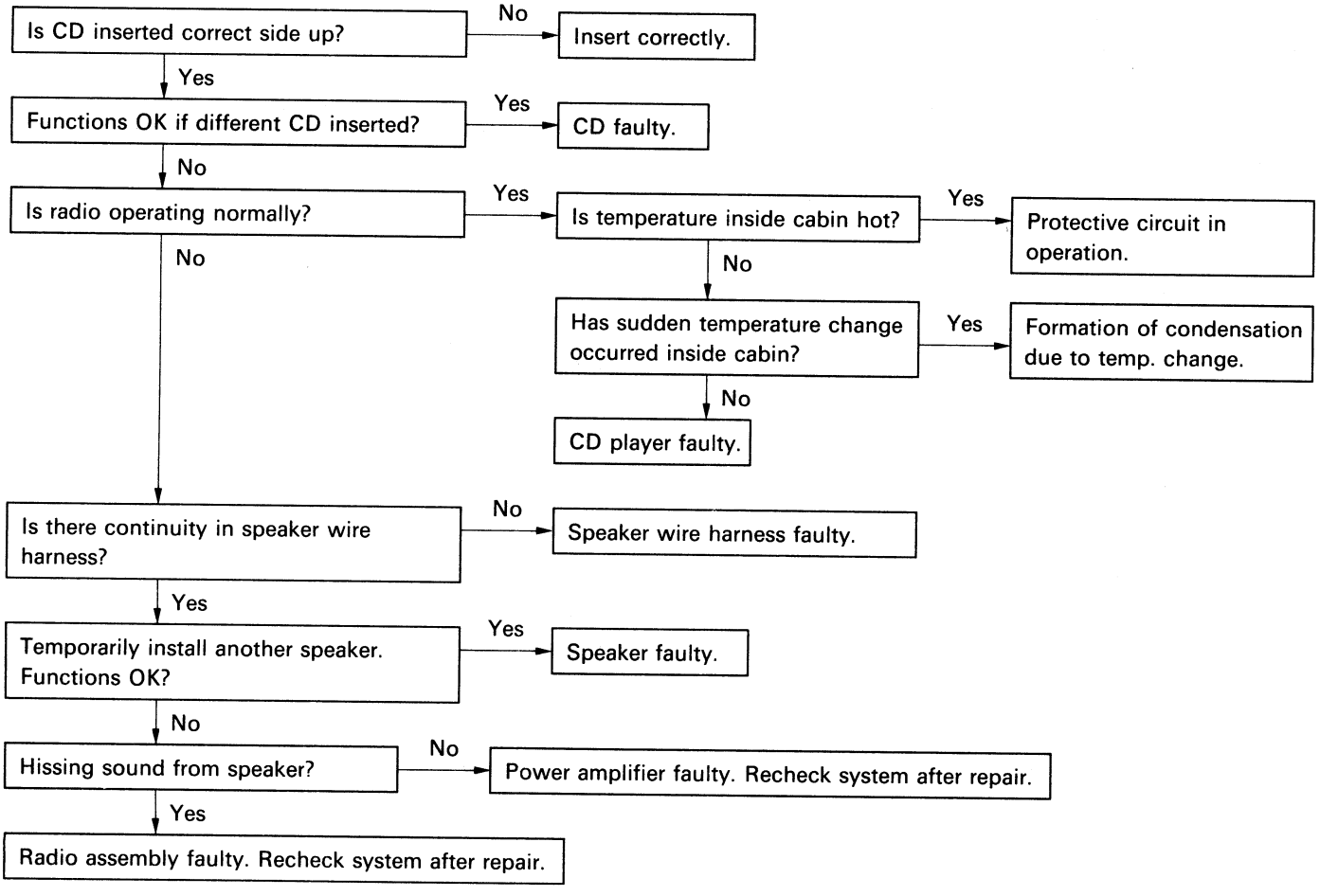

19 CD Player — SOUND JUMPS

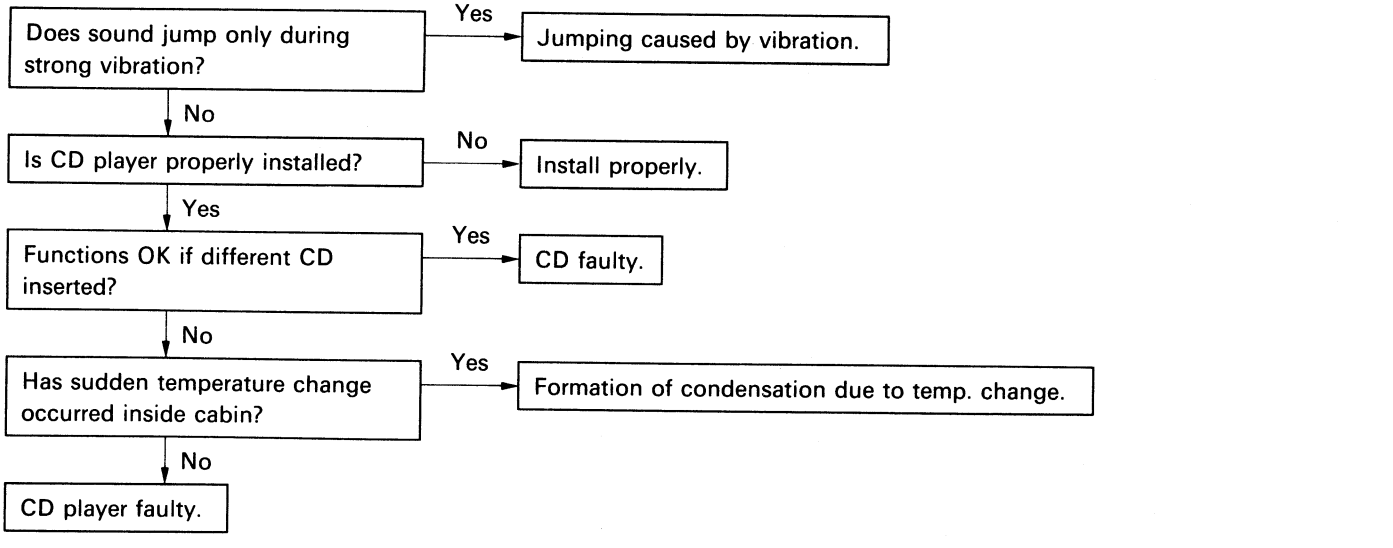

20 CD Player — SOUND QUALITY POOR (VOLUME FAINT)

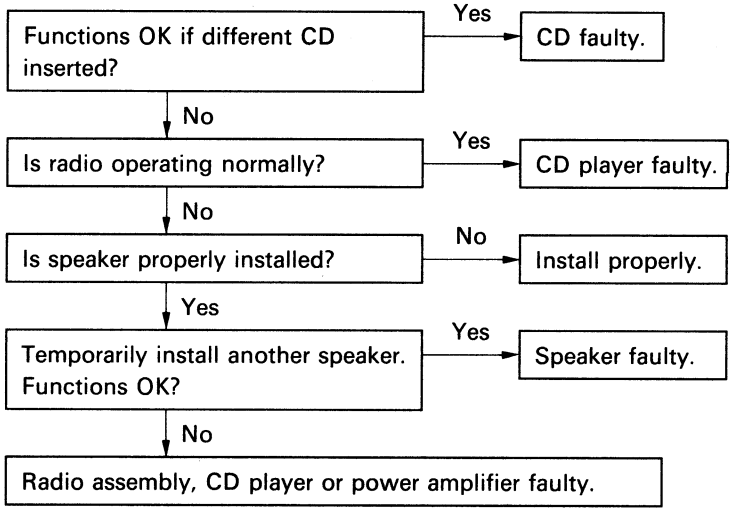

21 CD Player — EITHER SPEAKER DOES NOT WORK

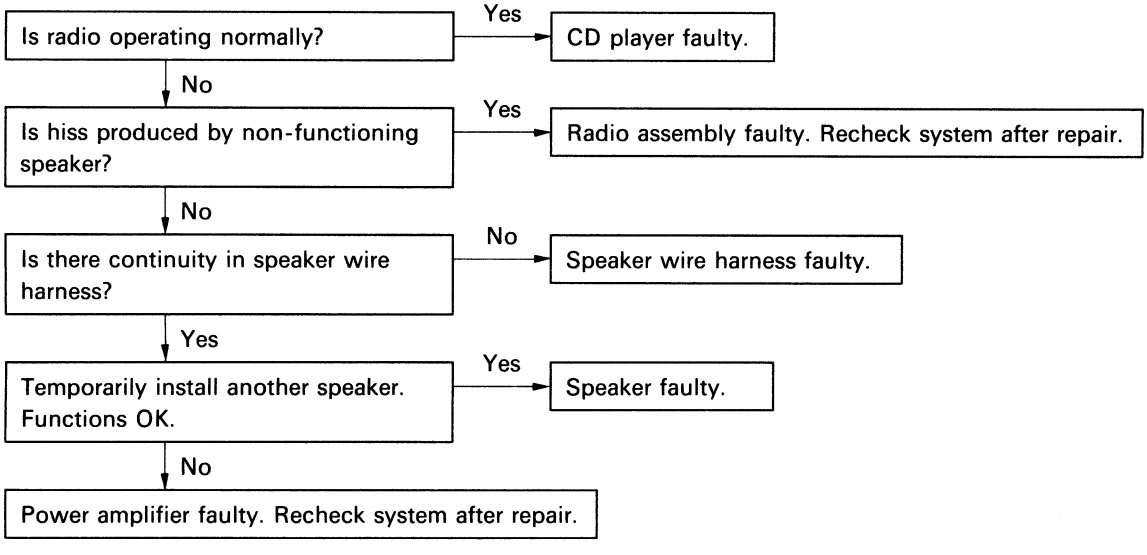

22 CD Player — CD WILL NOT EJECT

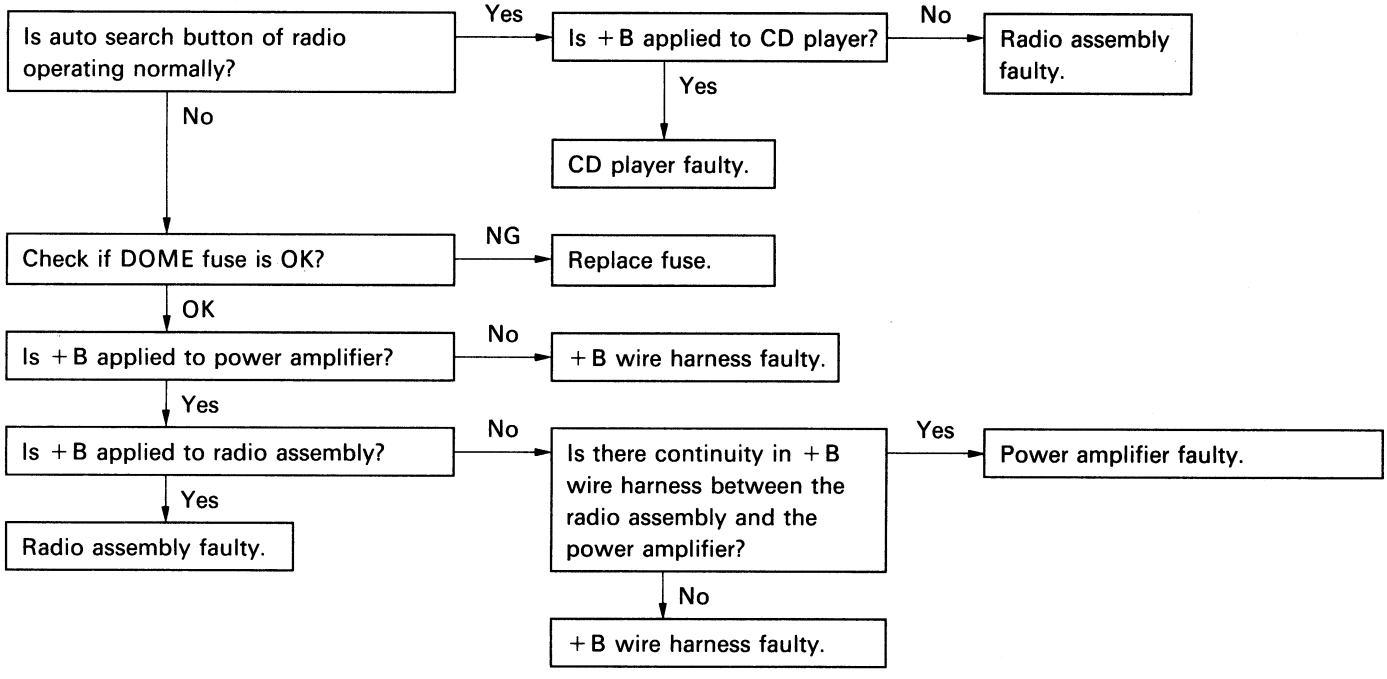

23	Antenna	ANTENNA-RELATED

P : Antenna w/o Motor M : Motor Antenna D : Motor Antenna and Glass Printed Antenna

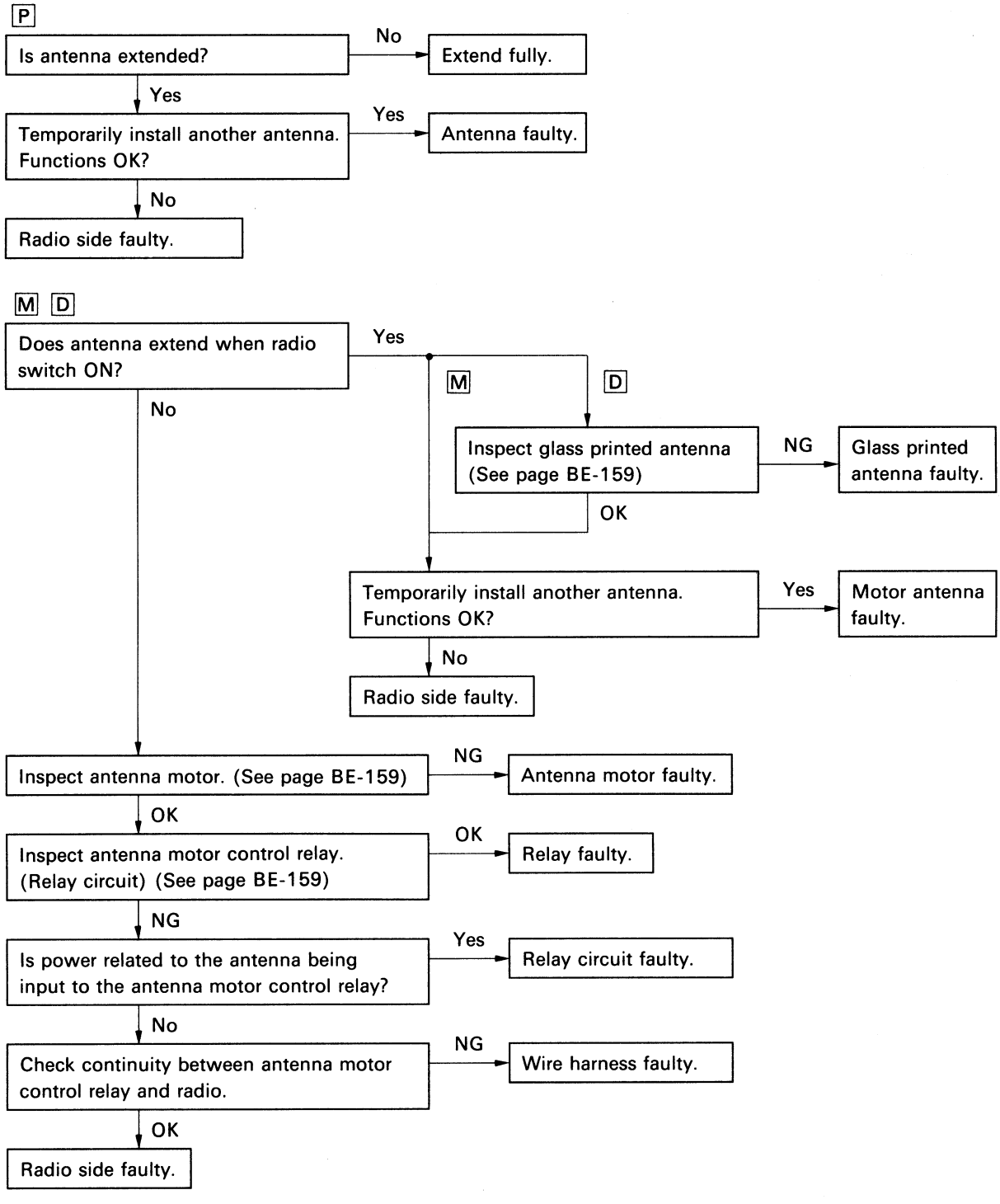

24 Noise — NOISE PRODUCED BY VIBRATION OR SHOCK WHILE DRIVING

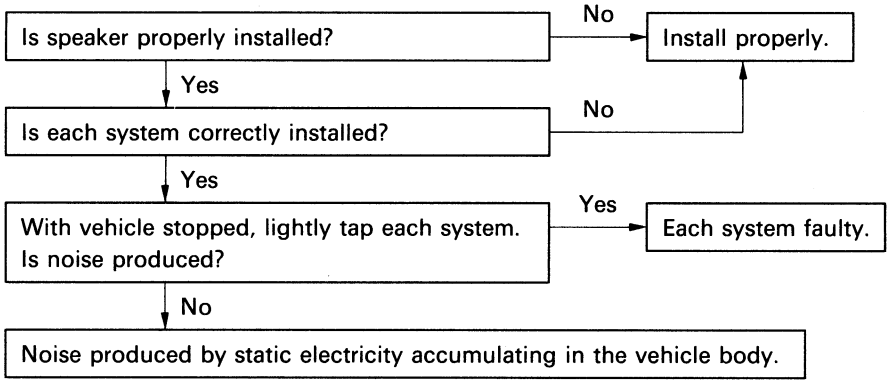

25 Noise — NOISE PRODUCED WHEN ENGINE STARTS

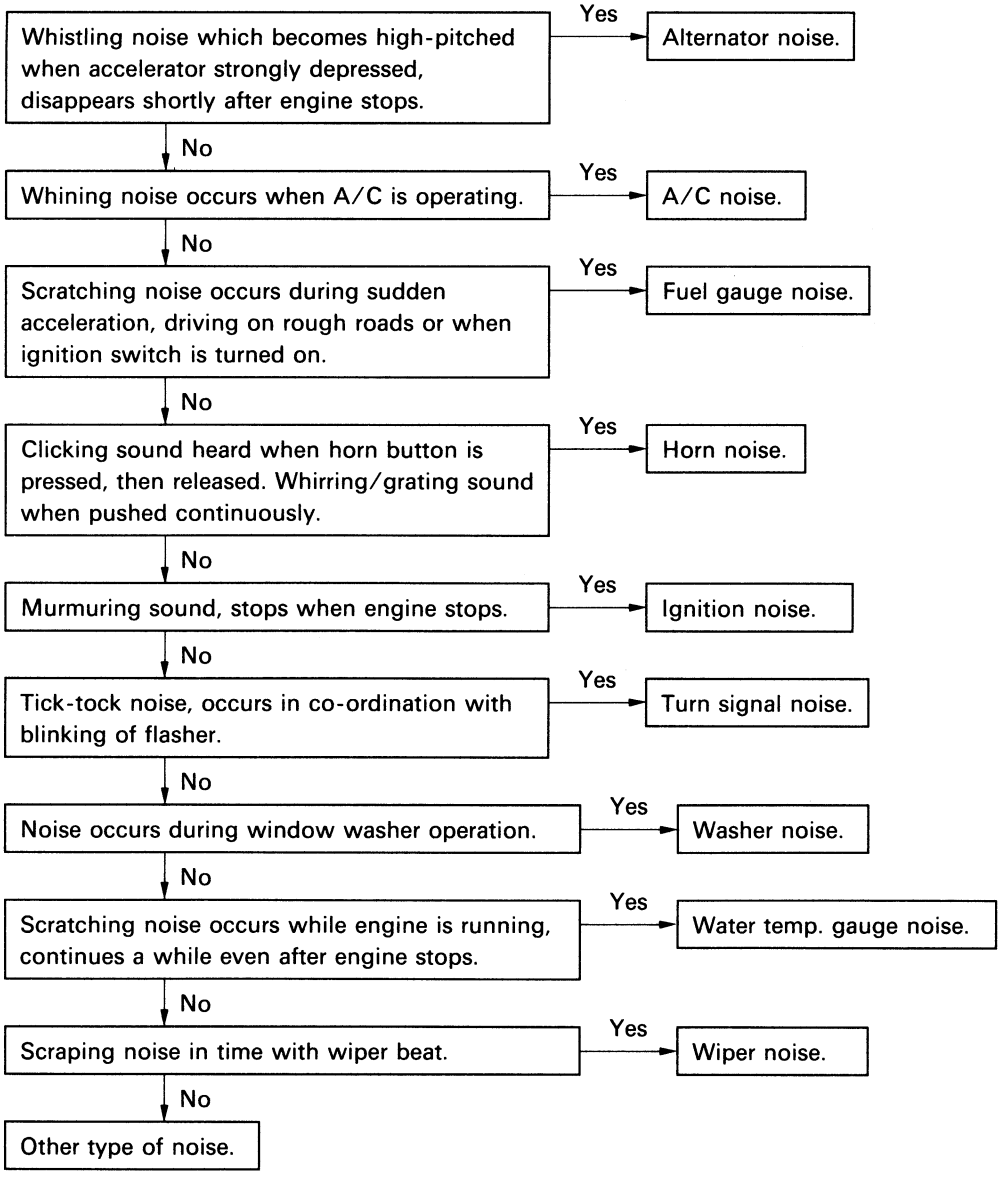

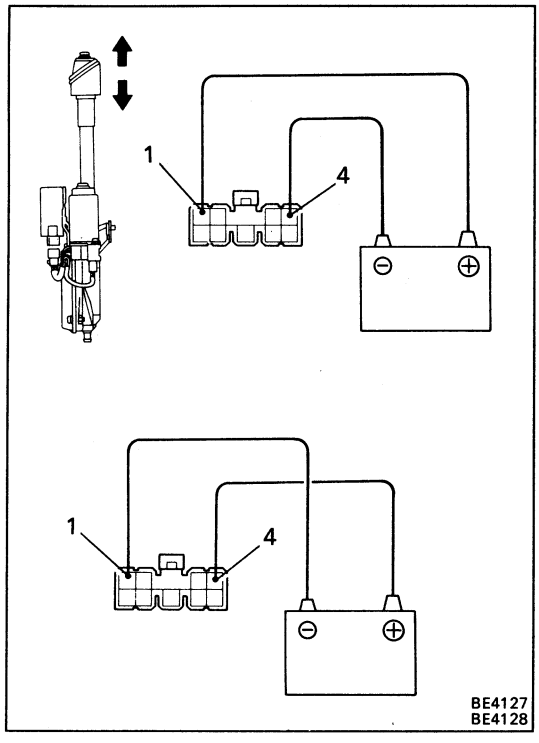

Parts Inspection

1. INSPECT ANTENNA MOTOR

(a) Connect the positive (+) lead from the battery to terminal 1 and the negative (–) lead to terminal 4.

(b) Check that the motor turns (moves upward).

NOTICE: These tests must be performed quickly (within 3-5 seconds) to prevent the coil from burning out.

(c) Then, reverse the polarity, check that the motor turns the opposite way (moves downward).

NOTICE: These tests must be performed quickly (within 3-5 seconds) to prevent the coil from burning out.

If operation is not as specified, replace the motor.

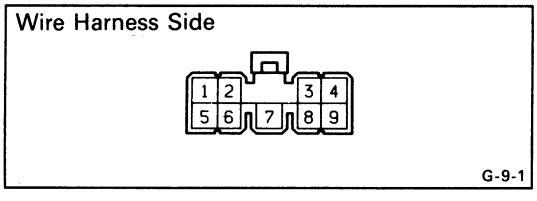

2. INSPECT ANTENNA MOTOR CONTROL RELAY

(Relay Circuit)

Disconnect the connector from the relay and inspect the connector on wire harness side as shown in the chart.

Check for	Tester connection	Condition			Specified value
Continuity	1 – 4	Constant			Continuity
	2 – Ground	Constant			Continuity
Voltage	3 – Ground	Constant			Battery voltage
	5 – Ground	Ignition switch position	LOCK		No voltage
			ACC or ON		Battery voltage
	6 – Ground	Ignition switch position	LOCK		No voltage
			ACC or ON	Radio switch and cassette OFF	No voltage
				Radio switch or cassette ON	Battery voltage
	8 – Ground	Ignition switch position	LOCK		No voltage
			ACC or ON	Radio switch OFF or cassette ON	No voaltage
				Radio switch ON and cassette OFF	Battery voltage
	9 – Ground	Ignition switch position	LOCK or ACC		No voltage
			ON		Battery voltage

If circuit is as specified, replace the relay.

3. INSPECT GLASS PRINTED ANTENNA

(Use same procedure as for "INSPECT DEFOGGER WIRES" on page BE-65.)

4. REPAIR GLASS PRINTED ANTENNA

(Use same procedure as for "REPAIR DEFOGGER WIRES" on page BE-66.)

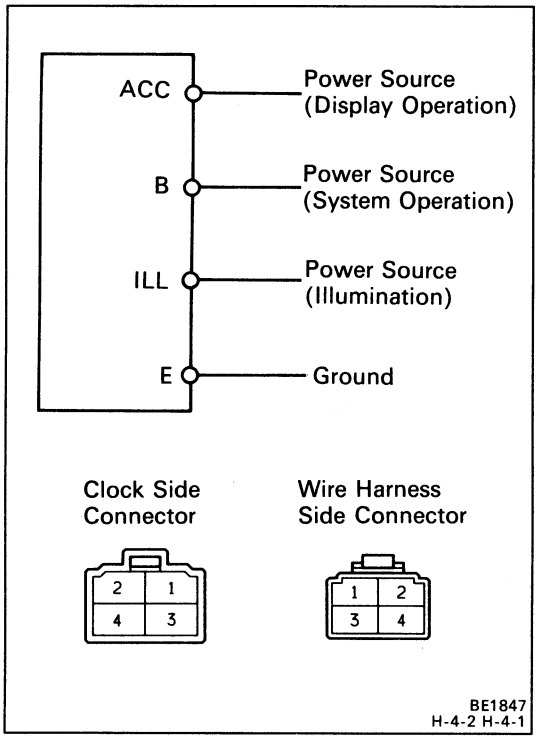

CLOCK

Troubleshooting

As shown in the illustration, those are clock circuit and connector diagrams. Inspect each terminal for applicable trouble.

Terminal		Condition	Specified value
1	E	Constant	Continuity
2	ILL	Turn light control switch ON	Battery Voltage
3	B	Constant	
4	ACC	Turn ignition switch ON	

Allowable error: ± 1.5 seconds/day

BODY

	Page
GENERAL INFORMATION	BO-2
HOOD	
Front Hood	BO-6
Engine Hood	BO-7
HEADLIGHT	BO-8
FRONT DOOR	BO-9
LUGGAGE COMPARTMENT DOOR	BO-22
MOULDING	
Windshield Moulding	BO-24
Body Outside Moulding	BO-26
Side Protection Moulding	BO-29
Back Window Moulding	BO-33
WINDSHIELD	BO-35
QUARTER WINDOW GLASS	BO-41
BACK WINDOW GLASS	BO-45
T-BAR ROOF	BO-48
MOON ROOF	BO-57
INSTRUMENT PANEL	BO-64
SEAT	BO-70
SEAT BELTS	BO-71
BODY DIMENSIONS	BO-73

GENERAL INFORMATION

HANDLING PRECAUTIONS

If there is a possibility the body and/or parts may be damaged, first remove the danger before performing repair operations.

Example:

1. Apply protection tape to the body adjacent to the body parts when removing and installing.

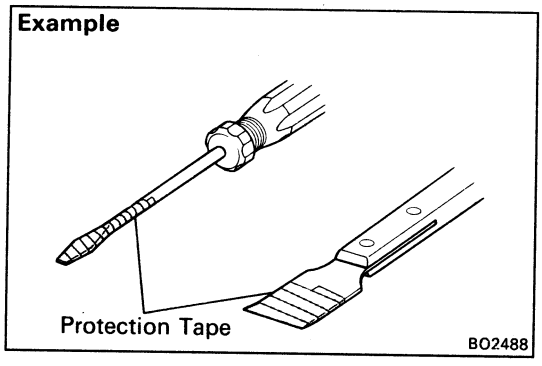

2. When prying off the body parts with a screwdriver or scraper etc., be sure to apply protection tape to the tip or blade to prevent damage to the paint film or body parts.

ANTI-RUST TREATMENT

If anti-rust agents are damaged while repairing other parts, be sure to repair the anti-rust agent.

Example:

1. If body sealant, paint film or undercoat are damaged by peeling, cracks, etc., be sure to repair each with an anti-rust agent.

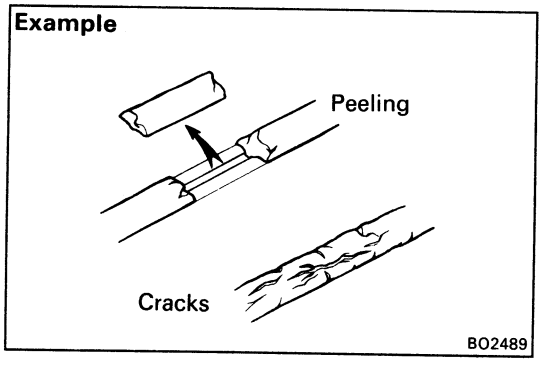

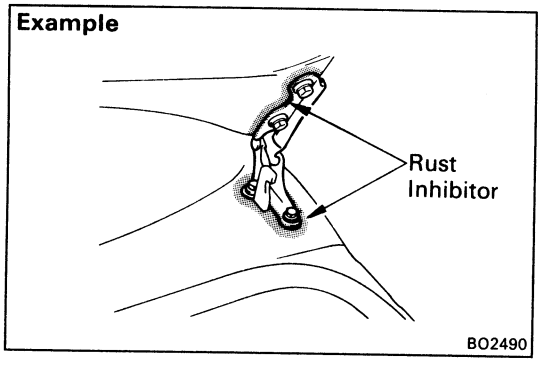

2. If a hinge or exterior body panel is loosened or removed, be sure apply rust inhibitor after repairs.

CLIPS

The removal and installation methods of typical clips used in body parts are shown in the table below.

HINT: If the clip is damaged during the operation, always replace it with a new clip.

Shape (Example)	Removal/Installation
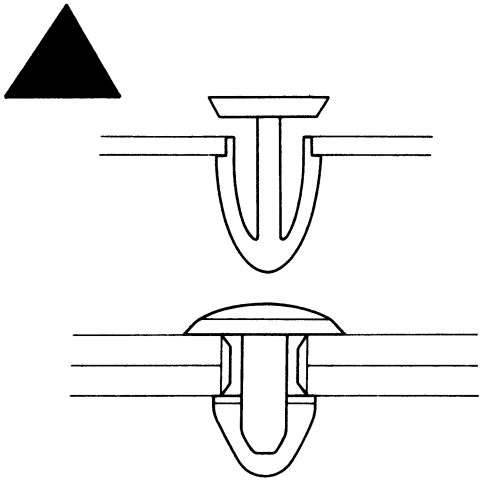 BE4116	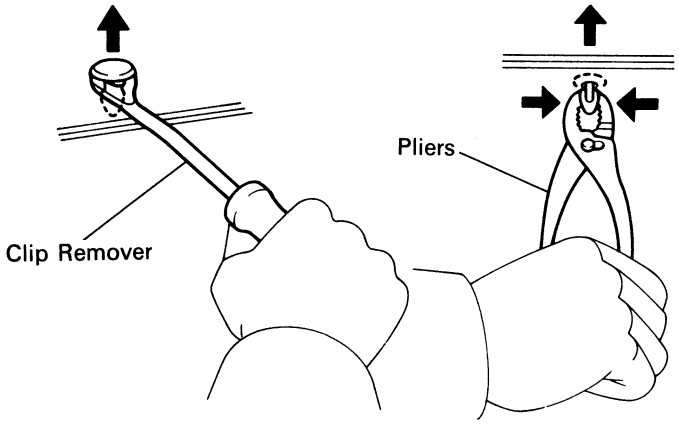 BO4117
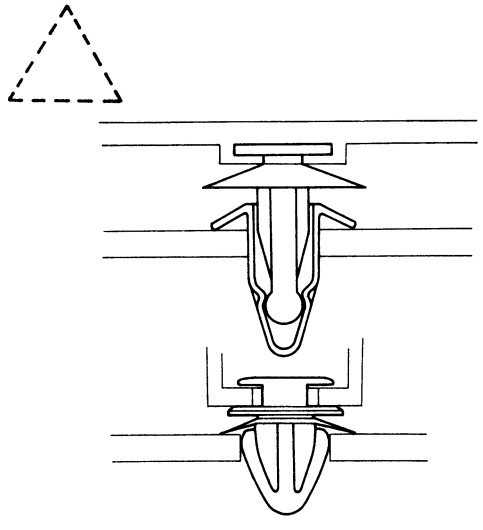 BO4118	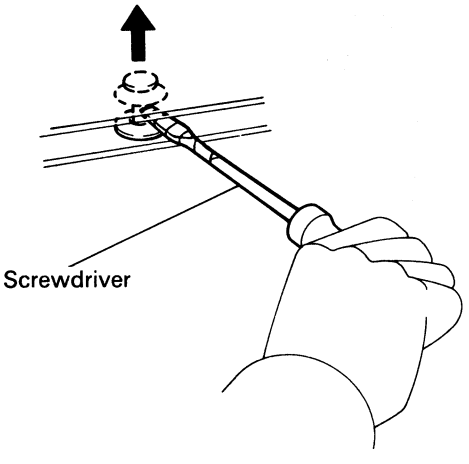 BO4119
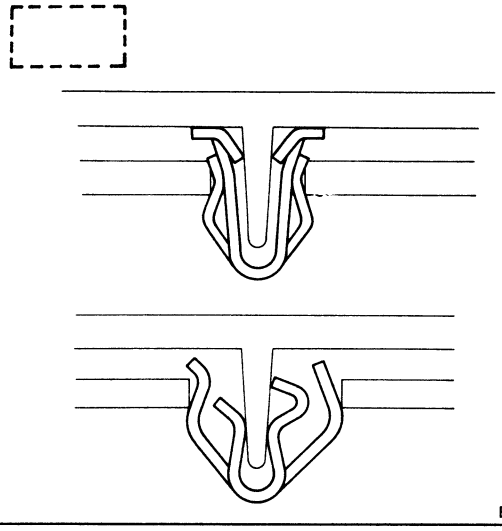 BO4120	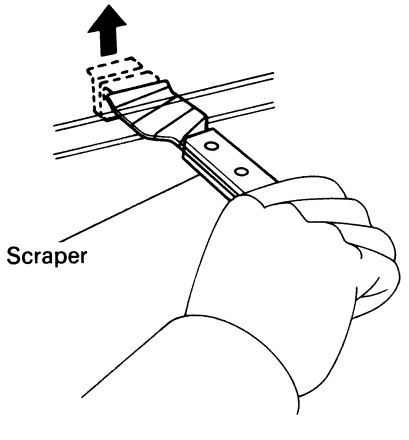 BO4121

CLIPS(Cont'd)

Shape (Example)	Removal/Installation
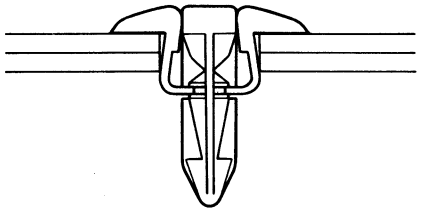 BO4122	Removal Installation 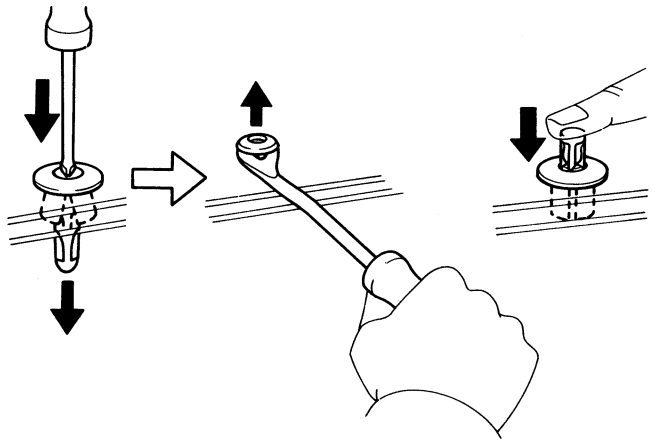 BO4123
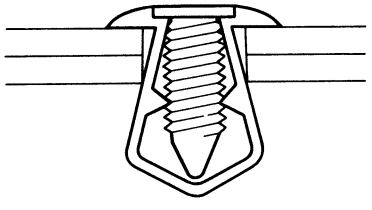 BO4124	Removal Installation 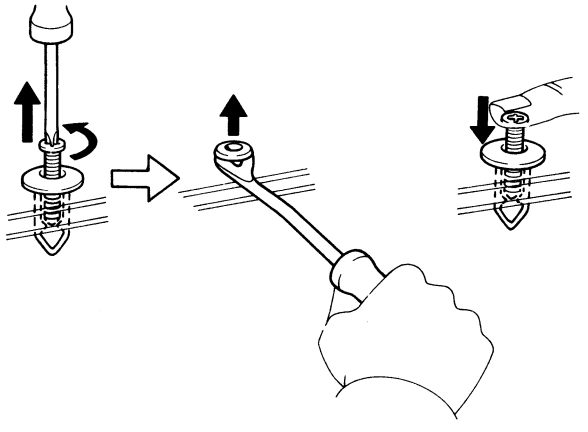 BO4125

SRS AIRBAG

(See page AB-2)

When servicing vehicles with an srs (Supplement Restraint System) airbag installed, be sure to carefully observe the instructions given below.
Failure to carry out service operations in the correct sequence could cause the airbag system to deploy, possibly leading to a serious accident.
When removal or installation of airbag parts and the yellow wire harness and connector for the airbag is necessary, refer to the precautionary notices in the AB section before performing the operation.

- Work must be started after 20 seconds or longer from the time the ignition switch is set to the LOCK position and the negative (–) terminal cable disconnected from the battery.
  (The airbag system is equipped with a back-up power source so that if work is started within 20 seconds of disconnecting the negative (–) terminal cable of the battery, the airbag may be deployed.)
- To avoid erasing the memory of each memory system, never use a back-up power supply from outside the vehicle.
- Before repairs, remove the airbag sensors if shocks are likely to be applied to the sensors during repaires.
- The front airbag sensor set bolt has been anti-rust treated. When the sensor is removed, always replace the set bolt with a new one.
- If the front airbag sensor, center airbag sensor or steering wheel pad have been dropped, or if there are cracks, dents or other defects in the case, bracket or connector, replace them with new ones.
- Never use airbag parts from another vehicle. When replacing parts, replace them with new parts.
- Do not expose the front airbag sensor, center airbag sensor or steering wheel pad directly to hot air or flames.
- The airbag system's wire harness is integrated with the cowl wire harness assembly. The wires for the airbag wire harness are encased in a yellow corrugated tube. All the connectors for the system are also a standard yellow color. If the airbag system wire harness becomes disconnected or the connector becomes broken due to an accident, etc., repair or replace it as shown on page AB-21.
- The steering wheel must be fitted correctly to the steering column with the spiral cable at the neutral position; otherwise, cable disconnection and other troubles may result. Refer to page AB-16 of this manual concerning correct steering wheel installation.
- When removing the steering wheel pad or handling a new steering wheel pad, it should be placed with the pad top surface facing up. In this case, the twin-lock type connector lock lever should be in the locked state and care should be taken to place it so the connector will not be damaged. (Storing the pad with its metallic surface up may lead to a serious accident if the airbag inflates for some reason.)
- Grease should not be applied to the steering wheel pad and the pad should not be cleaned with detergents of any kind.
- Store the steering wheel pad where the ambient temperature remains below 93°C (200°F), without high humidity and away from electrical noise.
- Information labels are attached to the periphery of the airbag components. Follow the notices.
- When the ignition switch is at ACC or ON and the airbag warning light remains on, the center airbag sensor assembly has detected a malfunction code.(See page AB-29)

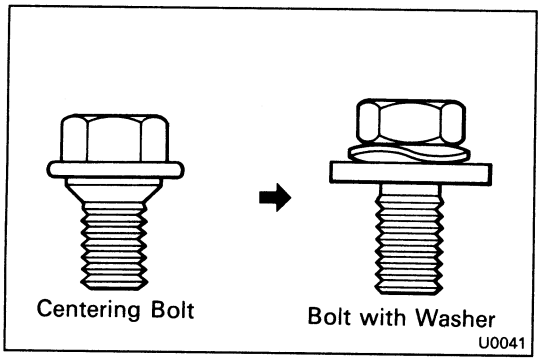

HOOD

ADJUSTMENT OF HOOD

HINT: Since the centering bolt is used as the hood hinge set bolt, the hood cannot adjusted with it on. Substitute the bolt with the washer for the centering bolt.

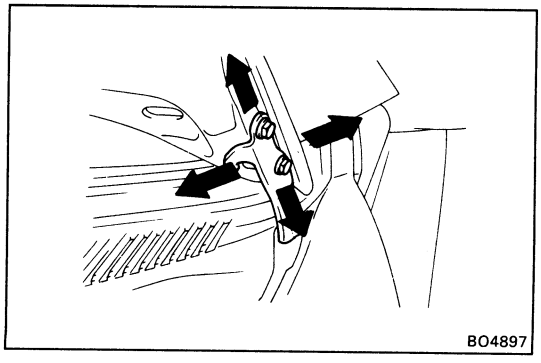

Front Hood

1. **ADJUST FRONT HOOD IN FORWARD/REARWARD AND VERTICAL DIRECTIONS**

   Adjust the hood by loosening the hood side hinge bolts.

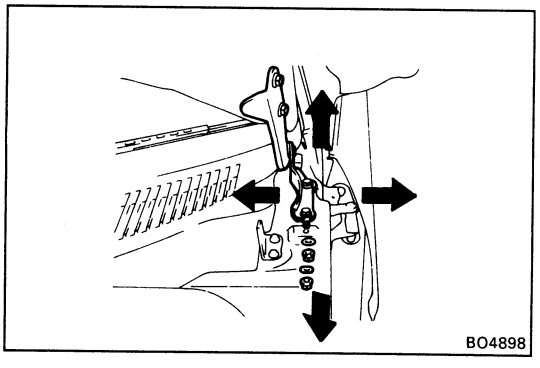

2. **ADJUST REAR EDGE OR FRONT HOOD IN LEFT/ RIGHT AND VERTICAL DIRECTIONS**

   (a) Remove front fender

   (b) (Left/Right Direction)
   Adjust the hood by loosening the hood hinge bolts.

   (Vertical Direction)
   Adjust the hood by increasing or decreasing the number of the shims.

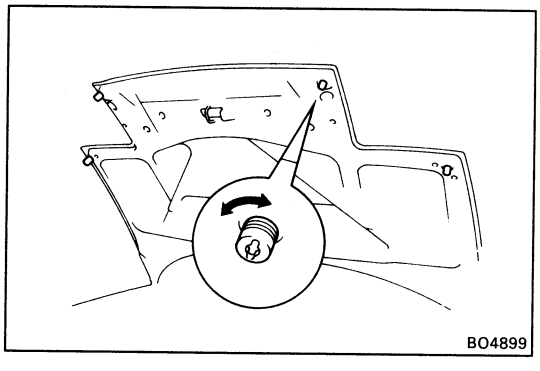

3. **ADJUST FRONT EDGE OF FRONT HOOD IN VERTICAL DIRECTION**

   Adjust the hood by turning the cushions.

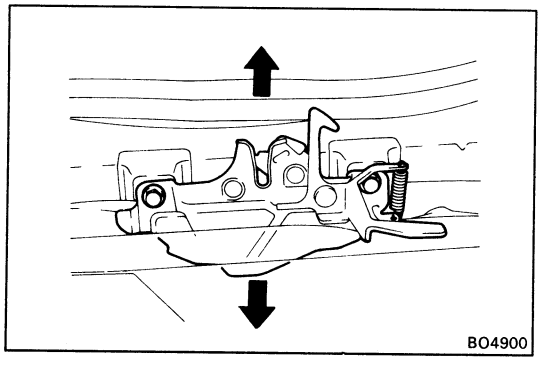

4. **ADJUST FRONT HOOD LOCK**

   Adjust the lock by loosening bolts.

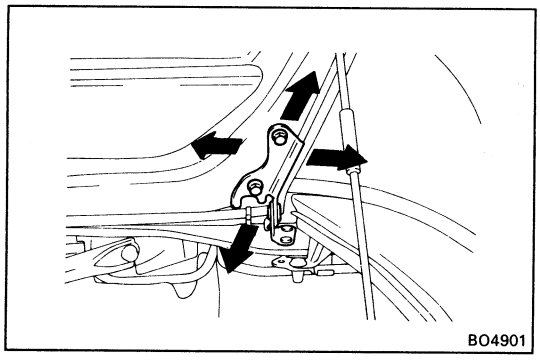

Engine Hood

1. ADJUST ENGINE HOOD IN FORWARD/REARWARD AND LEFT/RIGHT DIRECTIONS

Adjust the hood by loosening the body side hings bolts.

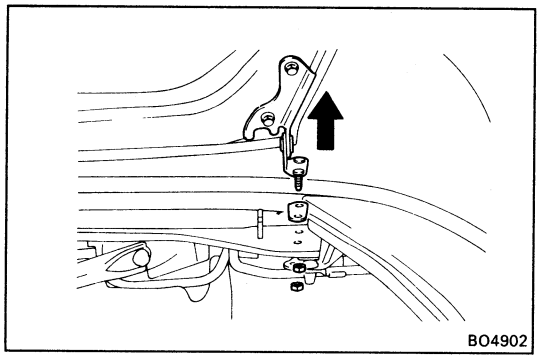

2. ADJUST FRONT EDGE OF ENGINE HOOD IN VERTICAL DIRECTION

Adjust the hood by increasing the number of shims.

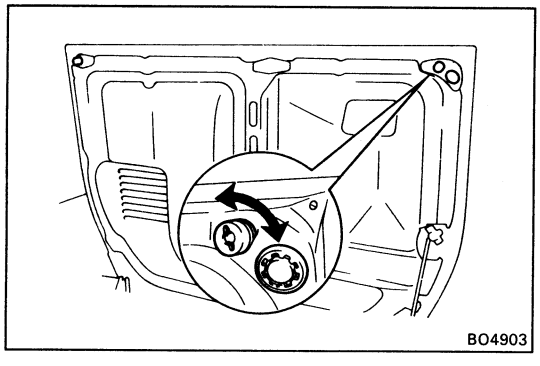

3. ADJUST REAR EDGE OF ENGINE HOOD IN VERTICAL DIRECTION

Adjust the hood by turning the cushions.

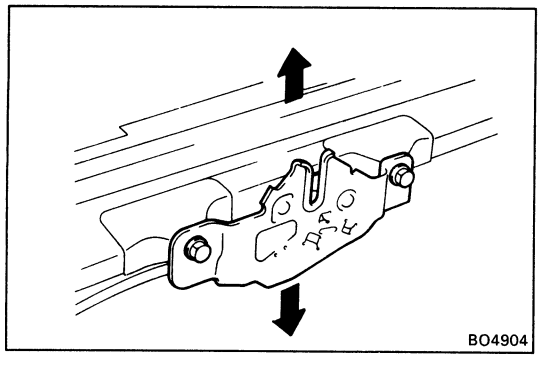

4. ADJUST ENGINE HOOD LOCK

Adjust the hood lock by loosening the mounting bolts.

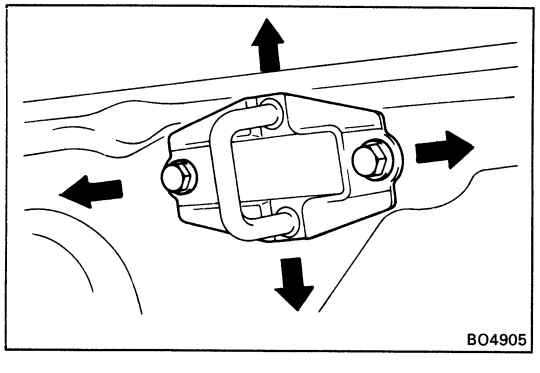

5. ADJUST ENGINE HOOD LOCK STRIKER

(a) Check that the hood fit and hood lock are adjusted correctly.

(b) Loosen the striker mounting bolts to adjust.

(c) Using a plastic hammer, top the striker to adjust it.

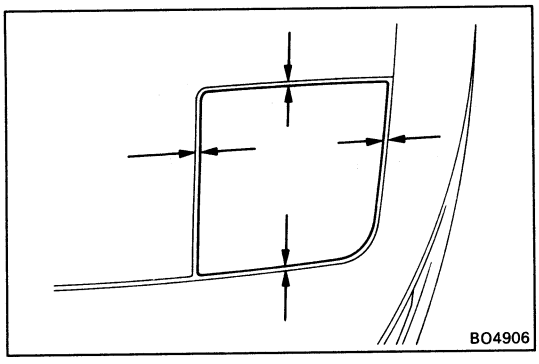

HEADLIGHT

CAUTION: When adjusting each section, raise or lower the headlight with the light control switch. But when adjusting each section, be sure to remove the RTR fuse (30A) before adjusting.

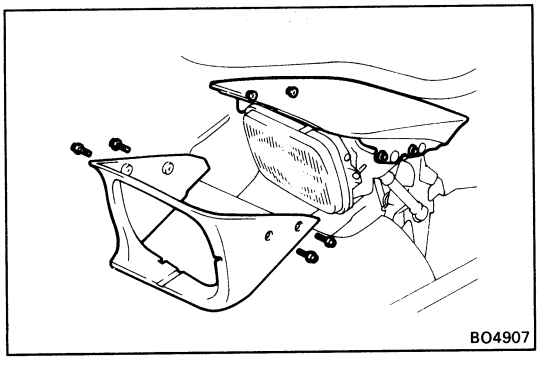

ADJUSTMENT OF HEADLIGHT

1. ADJUST HEADLIGHT HOOD IN FORWARD/ REARWARD AND LEFT/RIGHT DIRECTIONS

(a) Remove the headlight door.

(b) Adjust the headlight hood by loosening four cover set screws.

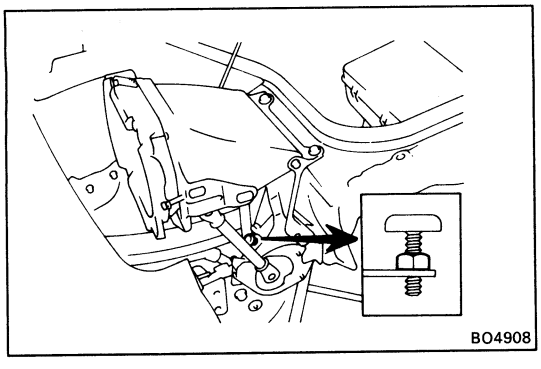

2. ADJUST HEADLIGHT SLANT

(a) Loosen the stopper lock nut.

(b) Lower the headlight.

(c) Turn the manual operation knob to align the rod and the crank arm.

(d) Change the rod lengh to adjust the headlight slant.

FRONT DOOR

COMPONENTS

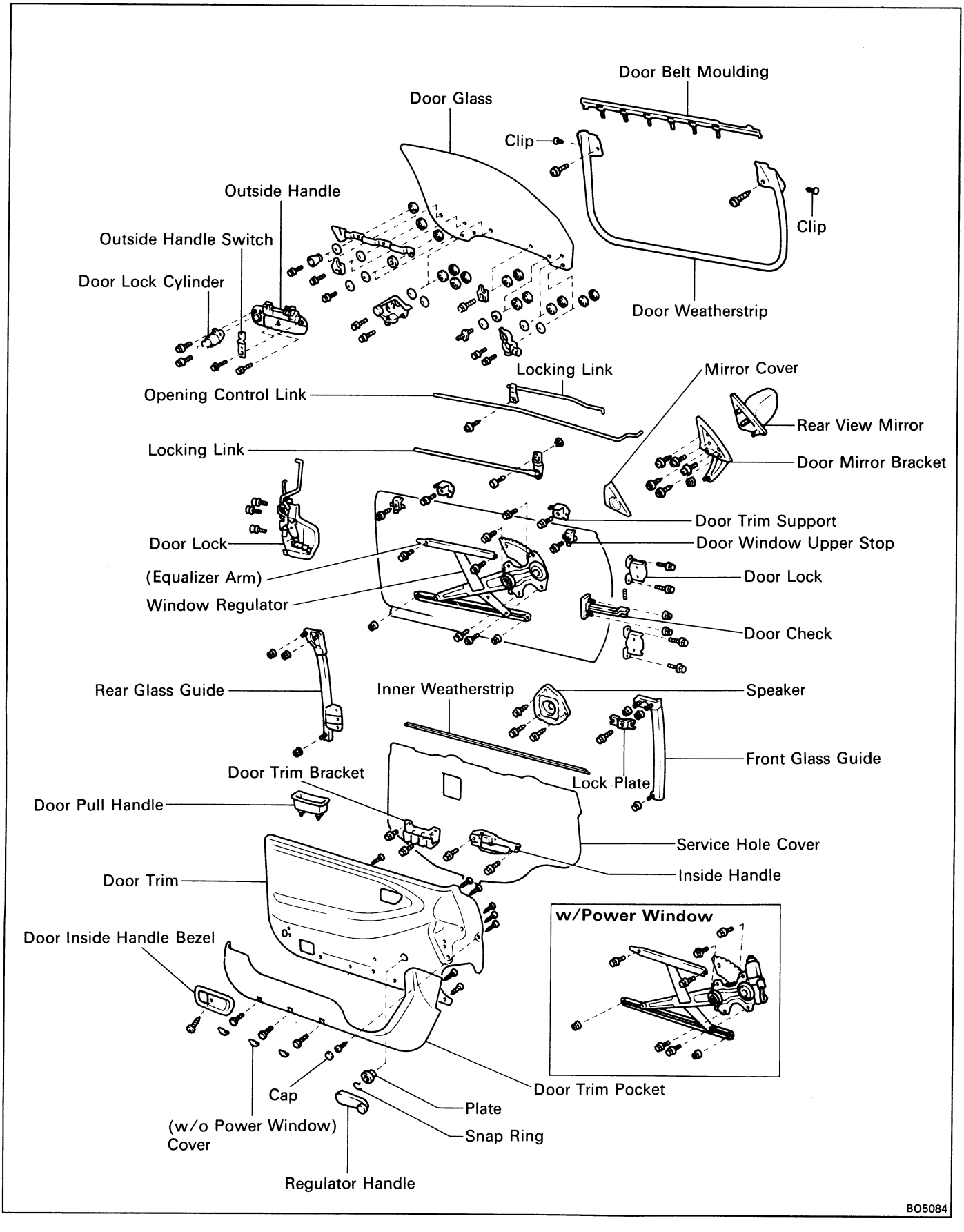

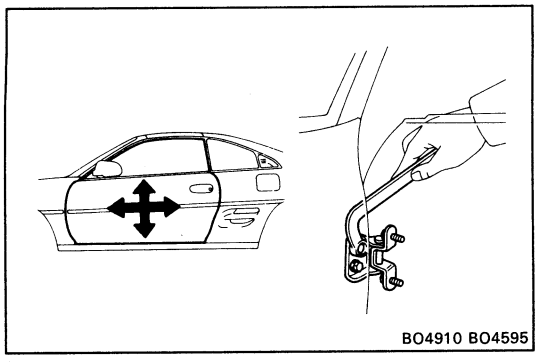
BO4910 BO4595

ADJUSTMENT OF FRONT DOOR

1. **ADJUST DOOR IN FORWARD/REARWARD AND VERTICAL DIRECTIONS**

   Using SST, adjust the door by loosening the body side hinge bolts.

   SST 09812-00010

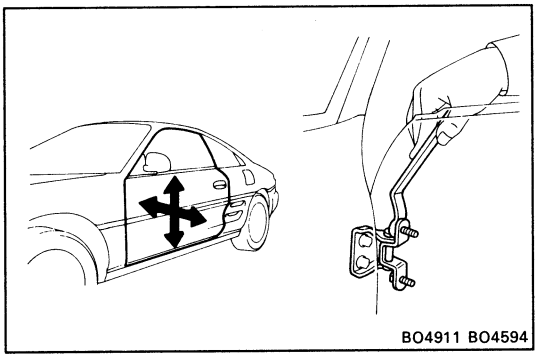
BO4911 BO4594

2. **ADJUST DOOR IN LEFT/RIGHT AND VERTICAL DIRECTIONS**

   Loosen the door side hinge bolts to adjust.

   HINT: Substitute the bolt for the centering bolt. (See page BO-6)

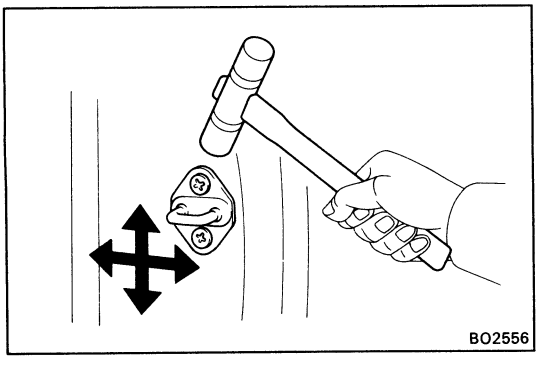
BO2556

3. **ADJUST DOOR LOCK STRIKER**

   (a) Check that the door fit and door lock linkages are adjusted correctly.

   (b) Loosen the striker mounting screws to adjust.

   (c) Using a plastic hammer, tap the striker to adjust it.

DISASSEMBLY OF FRONT DOOR

(See page BO-9)

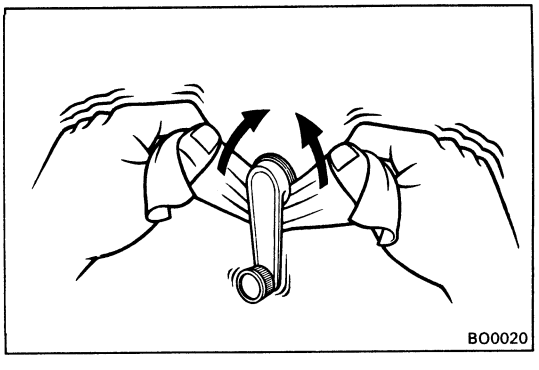
BO0020

1. **(w/o Power Window)**
   REMOVE REGULATOR HANDLE

   Pull off the snap ring with a shop rag and remove the regulator handle and plate.

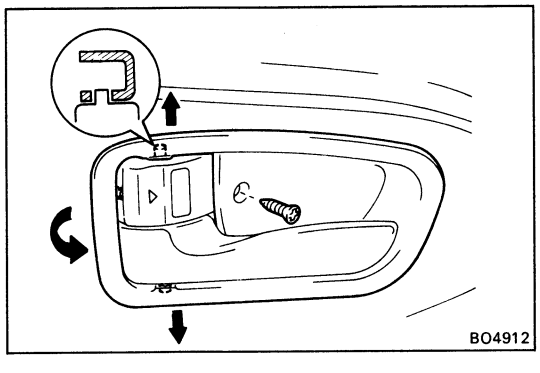
BO4912

2. **REMOVE DOOR INSIDE HANDLE BEZEL**

   Remove the screw and pull the inside handle bezel.

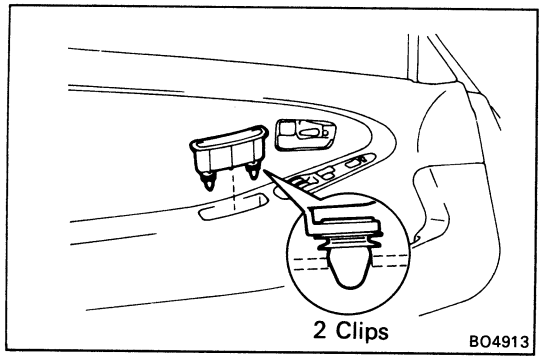

3. REMOVE DOOR PULL HANDLE

Remove the pull handle by pulling

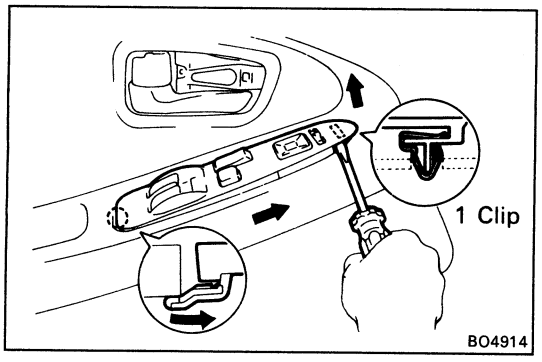

4. (w/Power Window)
REMOVE ARMREST PEDAL

(a) Insert the screwdriver between the door trim and the armrest panel to pry out.

HINT: Tape the screwdriver tip before use.

(b) Slide the armrest panel forward to remove it, then disconnect the connectors.

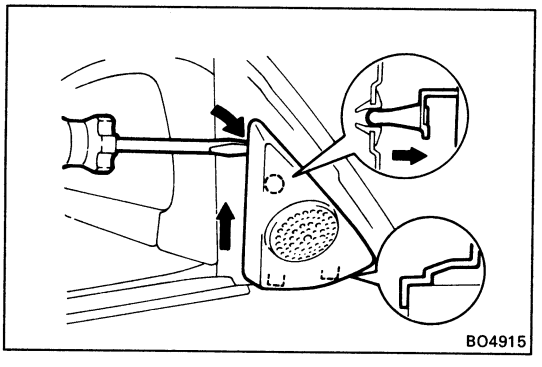

5. REMOVE MIRROR COVER

(a) Insert the screwdriver between the cover and the bracket to pry out.

HINT: Tape the screwdriver tip before use.

(b) Pull the cover upward to remove it.

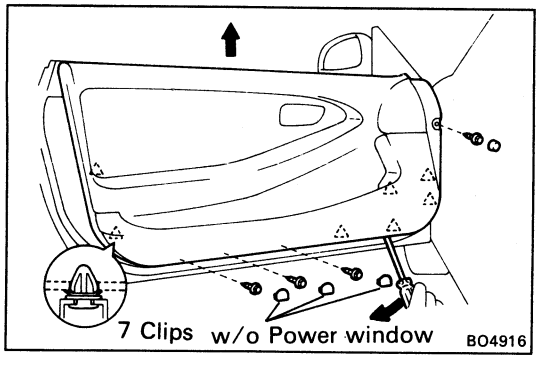

6. REMOVE DOOR TRIM

HINT: Tape the screwdriver tip before use.

(a) Using the screwdriver, remove the screw cap.

(b) (w/o Power Window)
Using the screwdriver, remove three covers.

(c) Remove four bolts.

(d) Insert the screwdriver between the door and the door trim to pry out.

(e) Pull the trim upward to remove it.

(f) (w/Door Courtesy Light)
Disconnect the connector.

(g) Remove eight screws and the door trim pocket from the door trim.

(h) Remove inner weatherstrip from the door trim.

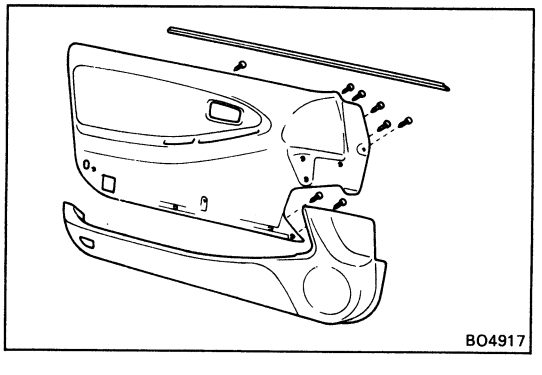

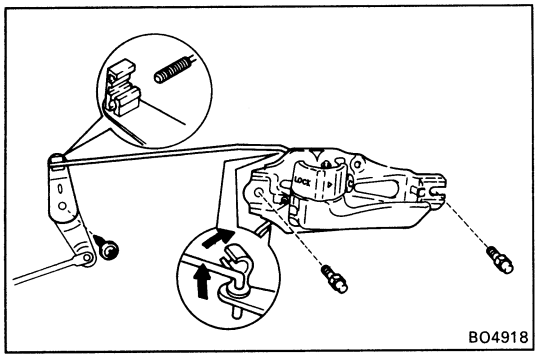

7. REMOVE DOOR INSIDE HANDLE

(a) Remove two bolts.

(b) Disconnect two links from the inside handle.

8. REMOVE LOCKING LINK

Remove the screw and the locking link.

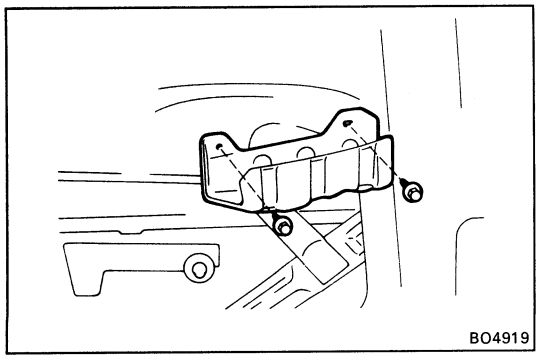

9. REMOVE DOOR TRIM BRACKET

Remove two bolts and the bracket.

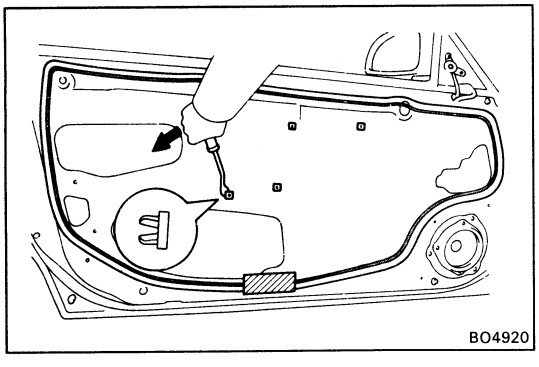

10. REMOVE SERVICE HOLE COVER

(a) Using the clip remover, remove four screw grommets.

(b) Remove service hole cover.

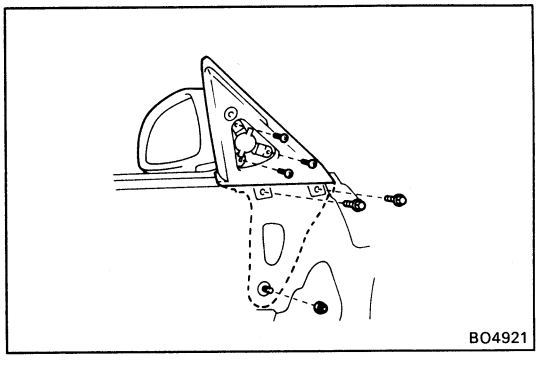

11. REMOVE REAR TRIM MIRROR

(a) (w/Remote Control Mirror)
Disconnect the connector.

(b) Remove three screws and the mirror.

12. REMOVE DOOR MIRROR BRACKET

(a) Remove two bolts and the nut.

(b) Pull the bracket to remove it.

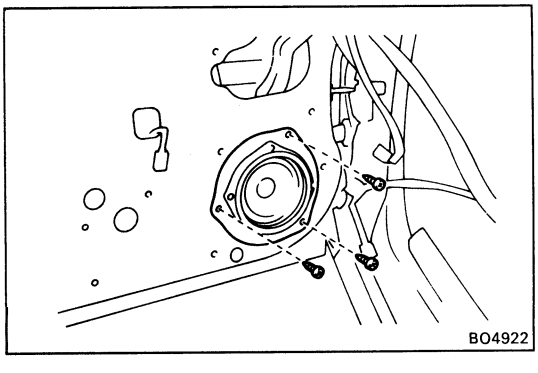

13. REMOVE SPEAKER

Remove three screws and the speaker, then disconnect the connector.

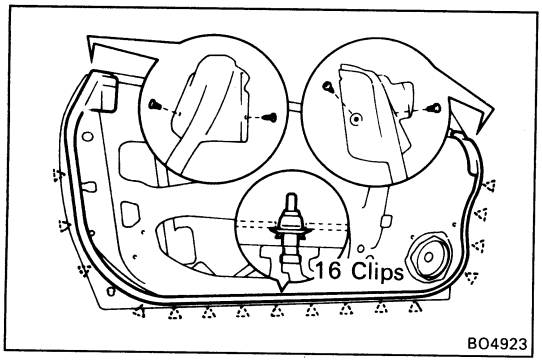

14. REMOVE DOOR WEATHERSTRIP

(a) Remove two screws and two clips.

(b) While pulling the weatherstrip by hand, remove the clips using the clip remover.

HINT: Do not pull strongly on the weatherstrip as it may tear.

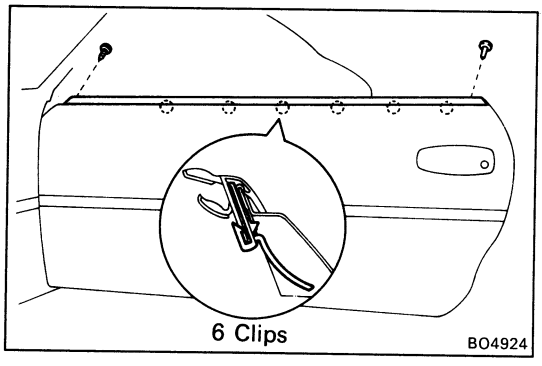

15. REMOVE DOOR BELT MOULDING

(a) Remove the screw from the front edge of the moulding.

(b) Remove the clip from the rear edge of the moulding.

(c) Pry out the clips from the edge of the moulding and remove the door belt moulding.

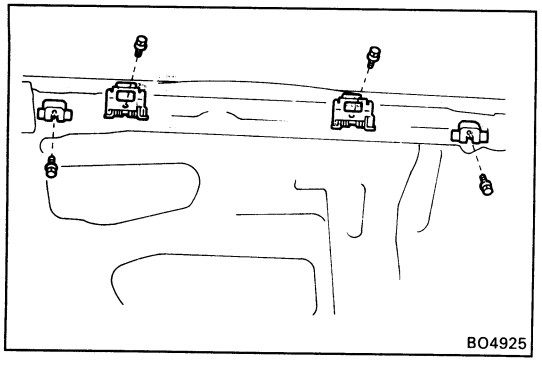

16. REMOVE DOOR WINDOW UPPER STOP

Remove two bolts and two upper stops.

17. REMOVE DOOR TRIM SUPPORT

Remove two bolts and two trim supports.

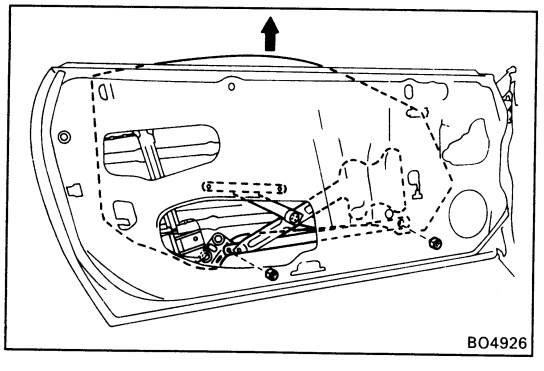

18. REMOVE DOOR GLASS

HINT: Insert a shop rag inside the panel to prevent scratching the glass.

(a) Remove two glass mounting nuts.

(b) Remove the door glass by pulling it upward.

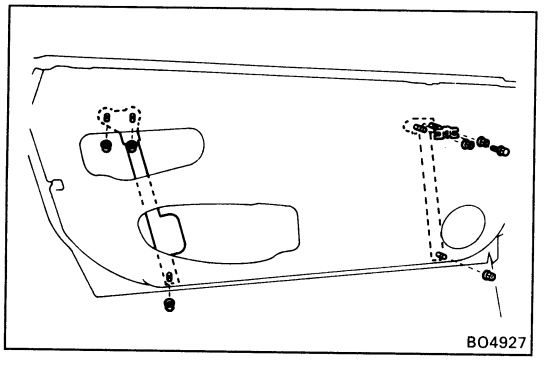

19. REMOVE FRONT GLASS GUIDE

(a) Remove the bolt and the lock plate.

(b) Remove three nuts from the guide.

(c) Pull out the guide upward from the panel.

20. REMOVE REAR GLASS GUIDE

(a) Remove three nuts from the guide.

(b) Pull out the guide upward from the panel.

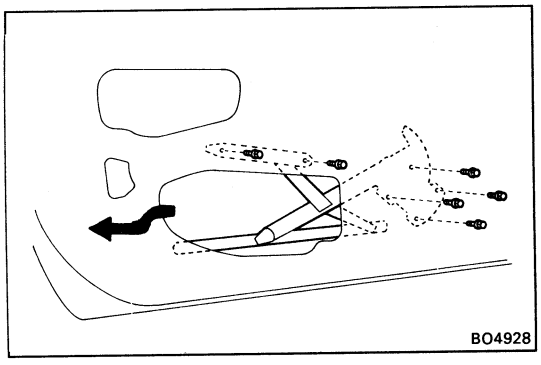

21. REMOVE WINDOW REGULATOR

(a) (w/Power Window)
Disconnect the connector.

(b) Remove two equalizer arm bracket mounting bolts.

(c) Remove four regulator mounting bolts.

(d) Remove the regulator through the service hole.

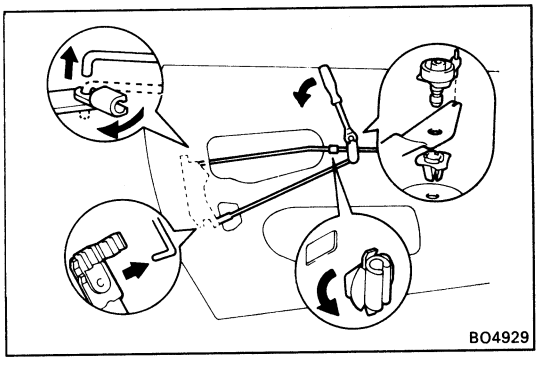

22. REMOVE LOCKING AND OPENING CONTROL LINK

(a) Disconnect two links from the door lock.

(b) Using the clip remover, remove the intermediate clip.

(c) Remove the locking and opening control link.

(d) Turn the clip, then pull it out.

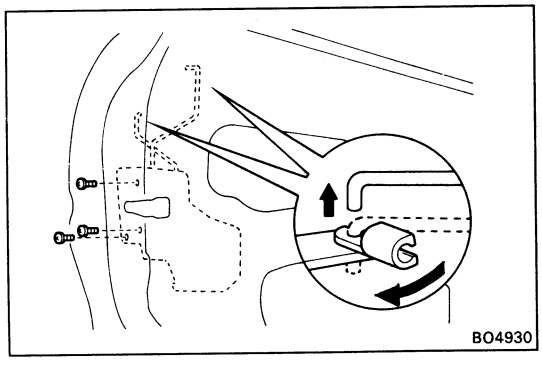

23. REMOVE DOOR LOCK

(a) Disconnect two links from the outside handle and the door lock cylinder

(b) (w/Power Door Lock)
Disconnect the connector.

(c) Remove three screws

(d) Remove the door lock through the service hole

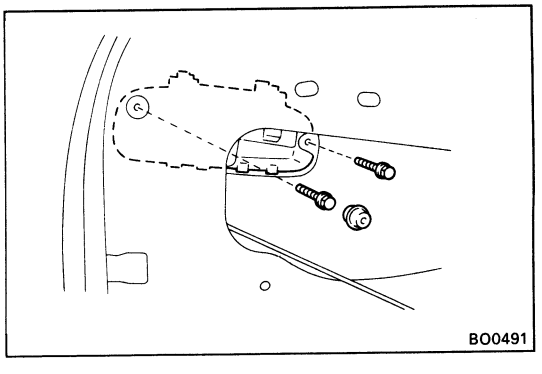

24. REMOVE OUTSIDE HANDLE WITH DOOR LOCK CYLINDER

(a) Remove the cushion.

(b) Remove two bolts and the outside handle with the lock cylinder.

(c) (w/ Power Door Lock)
Disconnect the connector.

(d) (w/ Door Key Cylinder Illumination Light)
Disconnect the connector.

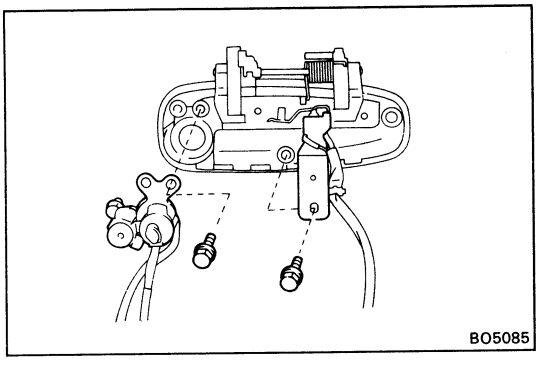

25. REMOVE DOOR LOCK CYLINDER

(a) (w/ Door Key Cylinder Illumination Light)
Remove the bolt and the outside handle switch from the outside handle.

(b) Remove the bolt and the lock cylinder from the outside handle.

REPLACEMENT OF GLASS

REMOVE FOLLOWING PARTS

(a) Door glass brackets
(b) Stabilizers
(c) Stopper
(d) Door glass plate

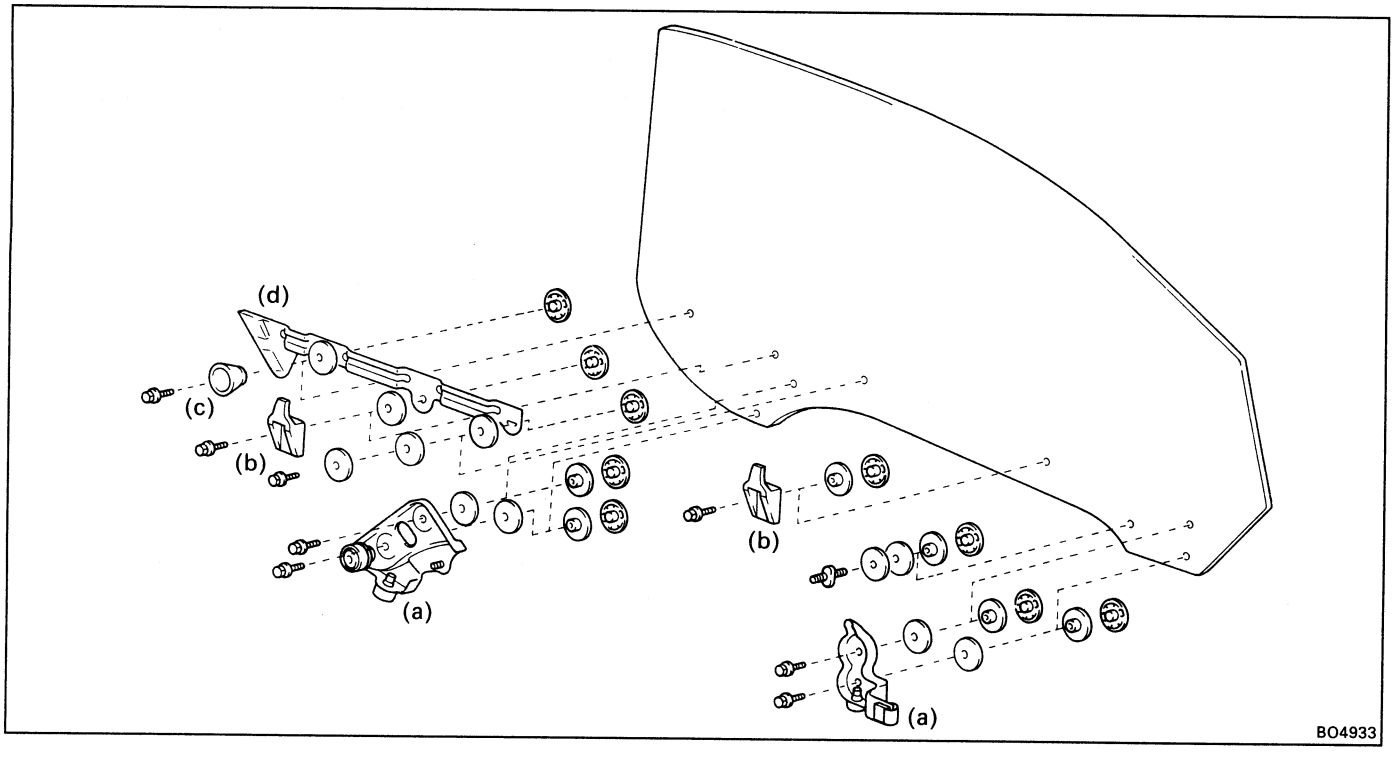

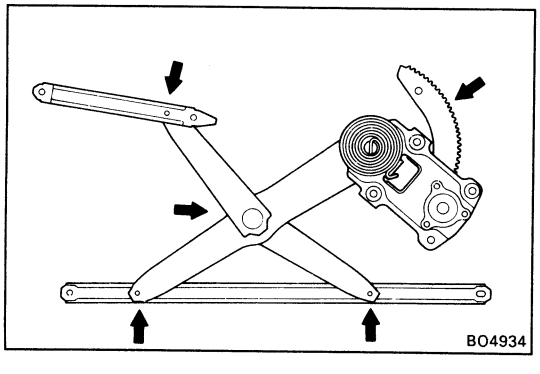

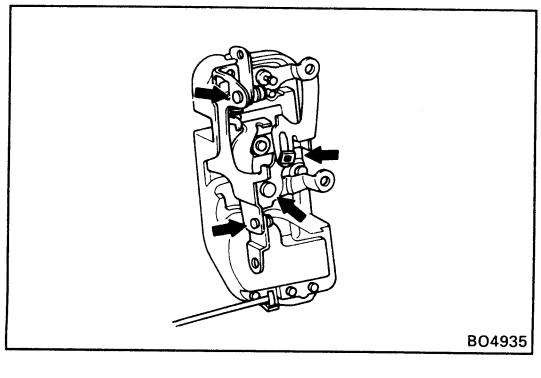

ASSEMBLY OF FRONT DOOR

(See page BO-9)

1. **BEFORE INSTALLING PARTS, COAT THEM WITH MP GREASE**

   (a) Apply MP grease to the sliding surface and gears of the window regulator.

   NOTICE: Do not apply MP grease to the spring of the window regulator.

   (b) Apply MP grease to the sliding surface of the door lock.

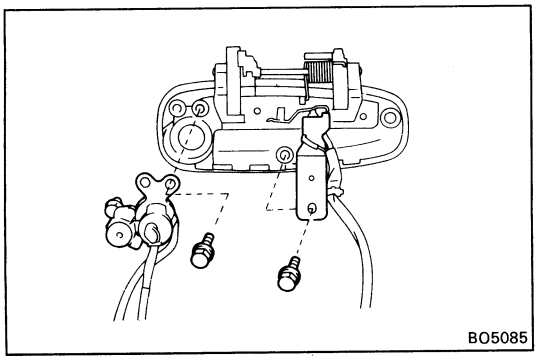

2. INSTALL LOCK CYLINDER

(a) Install the lock cylinder with the bolt to the outside handle.

(b) (w/ Door Key Cylinder Illumination Light)
Install the outside handle switch with the bolt to the outside handle.

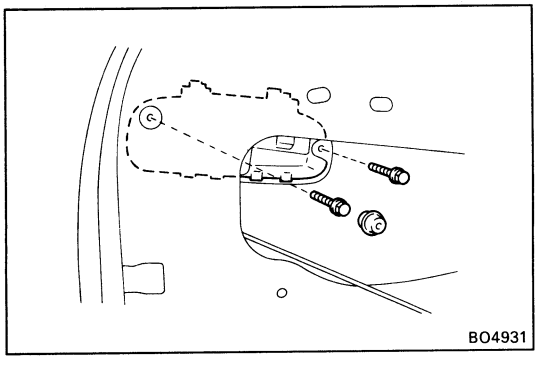

3. INSTALL OUTSIDE HANDLE WITH DOOR LOCK CYLINDER

(a) Install the outside handle with lock cylinder with two bolts.

(b) Install the cushion.

(c) (w/ Power Door Lock)
Connect the connector.

(d) (w/ Door Key Cylinder Illumination Light)
Connect the connector.

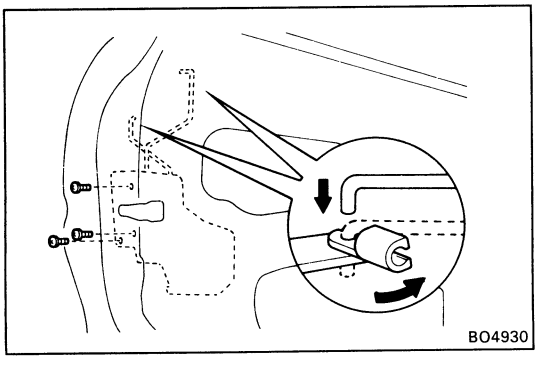

4. INSTALL DOOR LOCK

(a) Install the door lock with three screws.

(b) (w/Power Door Lock)
Connect the connector.

(c) Connect two links to the outside handle and the door lock cylinder.

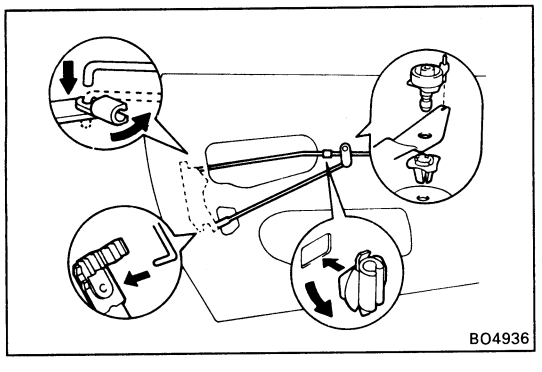

5. INSTALL LOCKING AND OPENING CONTROL LINK

(a) Install the clips, and the locking and opening control link.

(b) Connect two links to the door lock.

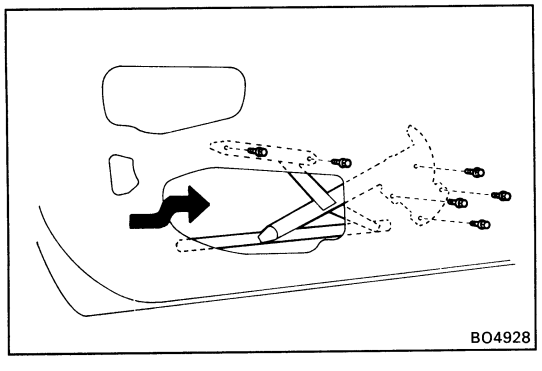

6. INSTALL WIND REGULATOR

(a) Place the regulator through the service hole.

(b) Install four regulator mounting bolts.

(c) Temporarily tighten two equalizer arm bracket bolts.

(d) (w/Power Window)
Connect the connector.

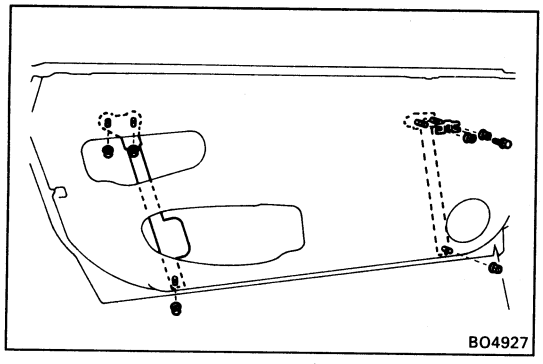

7. INSTALL REAR GLASS GUIDE

Install the rear glass guide with the lower nut and temporarity tighten two upper nuts.

8. INSTALL FRONT GLASS GUIDE

(a) Install the front glass guide with the lower nut and temporarily tighten two upper nuts.

(b) Install the lock plate and temporarily tighten the bolt.

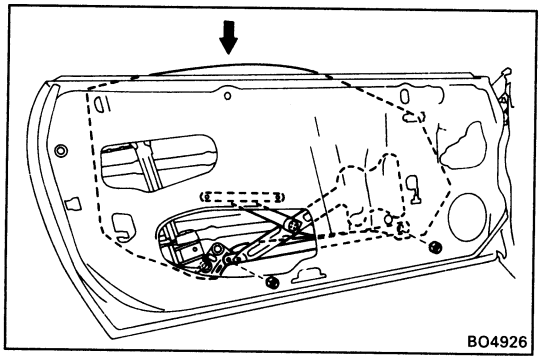

9. INSTALL DOOR GLASS

(a) Insert the glass to the glass guides.

(b) Install the glass to the regulator with two glass mounting nuts.

HINT: Insert a shop rag inside the panel to prevent scratching the glass.

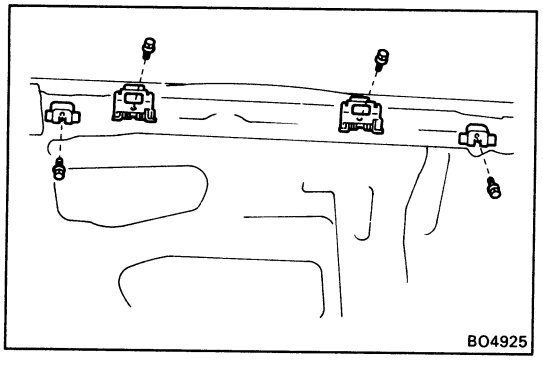

10. INSTALL DOOR TRIM SUPPORT

Install two trim supports and temporarily tighten two bolts.

11. INSTALL DOOR WINDOW UPPER STOP

Install two upper stops and temporarily tighten two bolts.

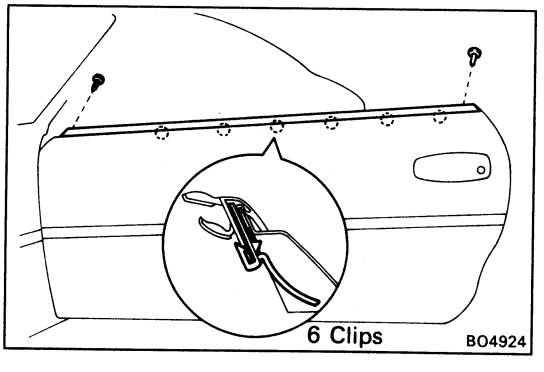

12. INSTALL DOOR BELT MOULDING

(a) Insert the claw of the clips into the upper panel slit and push the moulding onto the panel.

(b) Install the clip and the screw.

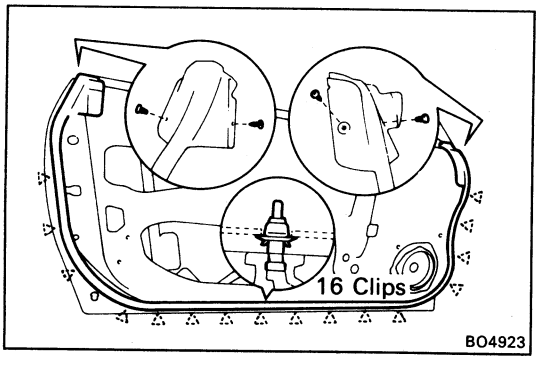

13. INSTALL DOOR WEATHERSTRIP

(a) Install the weatherstrip with clips to the panel.

(b) Install two clips and two screws.

14. INSTALL SPEAKER

(a) Connect the connector.

(b) Install the speaker with three screws.

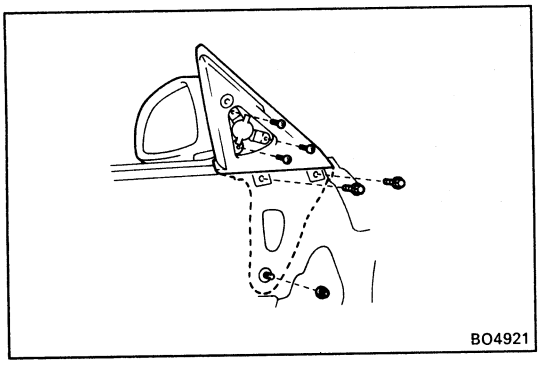

15. INSTALL DOOR MIRROR BRACKET

(a) Place the bracket in the panel

(b) Install the nut and two bolts.

16. INSTALL REAR VIEW MIRROR

(a) Install the mirror with three screws.

(b) (w/Remote Control Mirror)
Connect the connector.

17. ADJUST DOOR GLASS

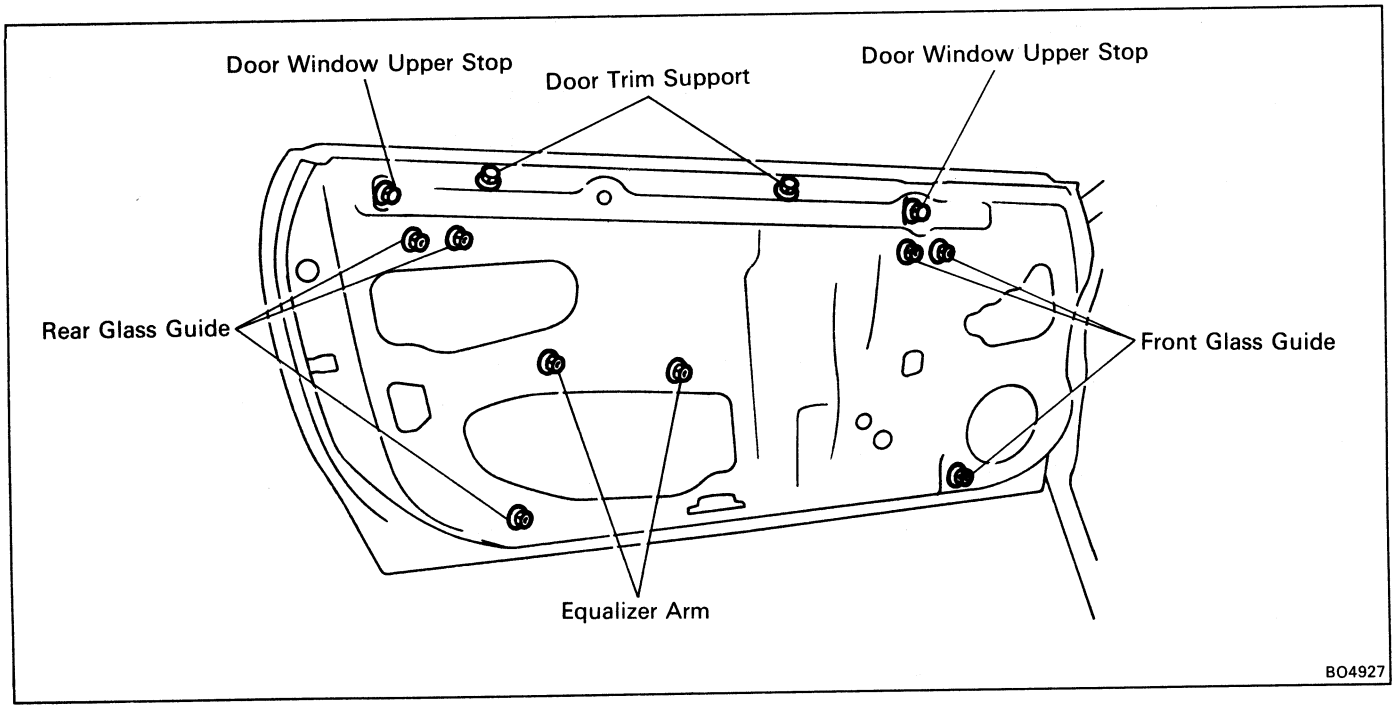

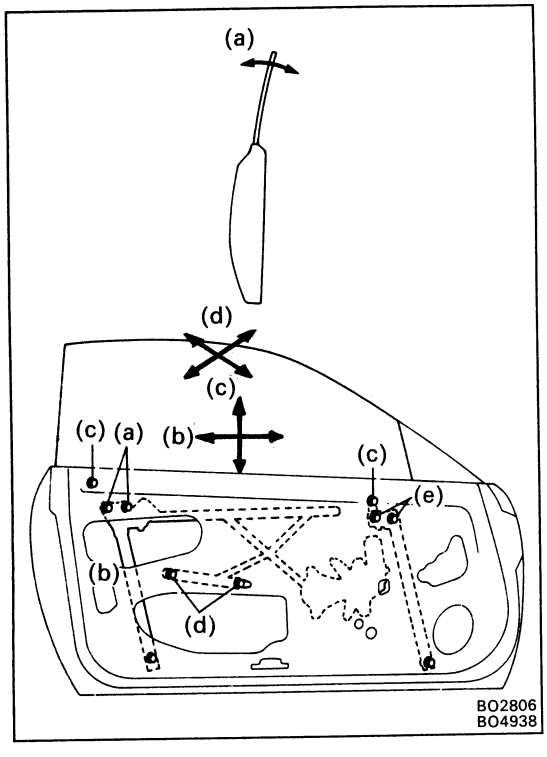

[In left/right direction-upperside of glass]

Using a hexagon wrench, adjust the stud bolts (a) of the rear glass guide. For example, if you turn right both stud bolts, the upper side of the glass move to outside.

HINT: Turn both stud bolts of the glass guide and equal amount.

[In forward/rearward direction]

Loosen the two nuts and slide the rear glass guide (b) forward or rearward to adjust the glass.

[In vertical direction]

Adjust the door window upper stop (c).

[In lean of forward/rearward direction]

Adjust the equalizer arm bracket mounting bolts (d).

18. TIGHTEN EACH BOLT, NUT OF EACH PART

HINT: When installing the front guide, after adjusting each part, temporarily tighten the two nuts (e) until they touch the inner panel surface.
Then install the lock plate and tighten the bolt.

19. CHECK DOOR GLASS

(a) When you close the door with the glass fully closed check that the A-A, B-B, C-C sections are in the same condition as shown in the illustration.

(b) When you close the door with the glass fully closed, be careful that the glass is not caught in the weatherstrip.

(c) When you raise up the glass, check that the glass and the roof weatherstrip retainer are parallel and the front and rear door window upper stops touch at the same time.

(d) When you raise up the glass to the middle, check that the gap of the glass is not big in the door trim support.

(e) Check that the glass move smoothly.

If the above conditions are not met, readjust the glass.

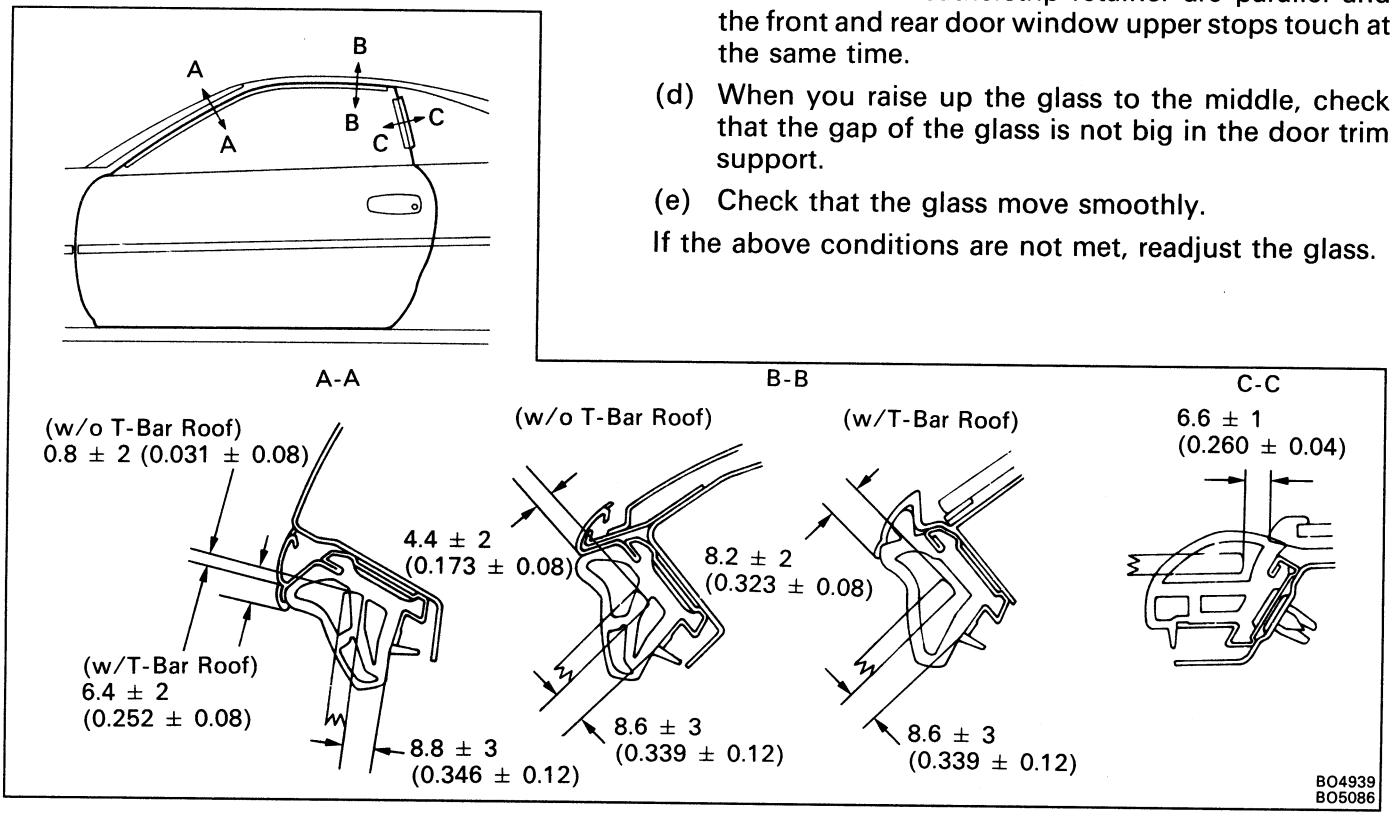

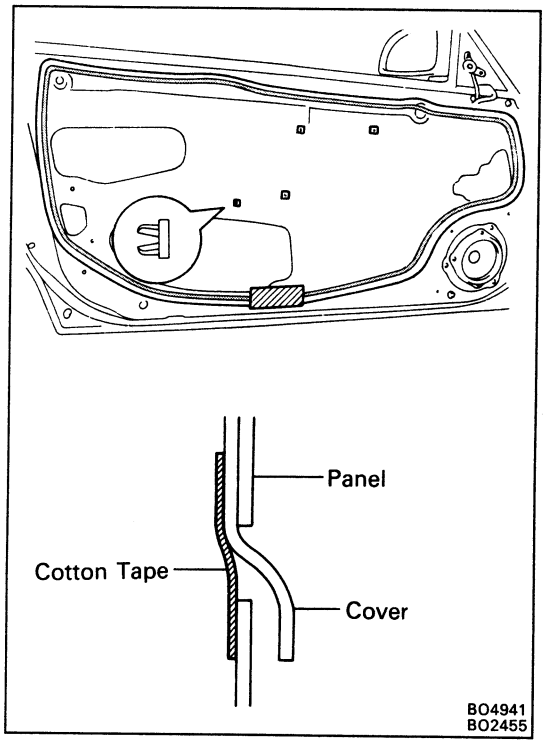

20. INSTAL SERVICE HOLE COVER

(a) Seal the service hole cover with adhesive.

HINT: Bring out the link through the service hole cover.

(b) Insert the lower edge of the cover into the panel slit.

(c) Seal the panel slit with cotton tape.

NOTICE: Do not block the trim clip sealing with the tape.

(d) Install four screw grommets.

21. INSTALL DOOR TRIM BRACKET

Install the bracket with two bolts.

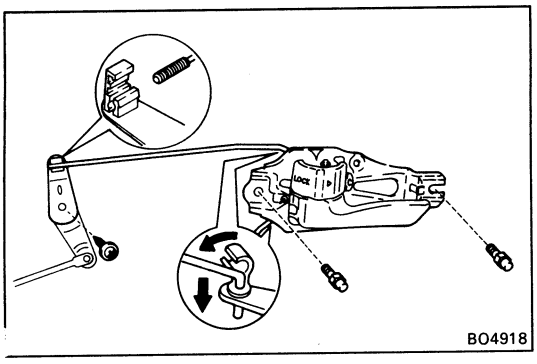

22. INSTALL LOCKING LINK

Install the locking link with the screw.

23. INSTALL DOOR INSIDE HANDLE

(a) Connect two links to the inside handle.

(b) Install the inside handle with two bolts.

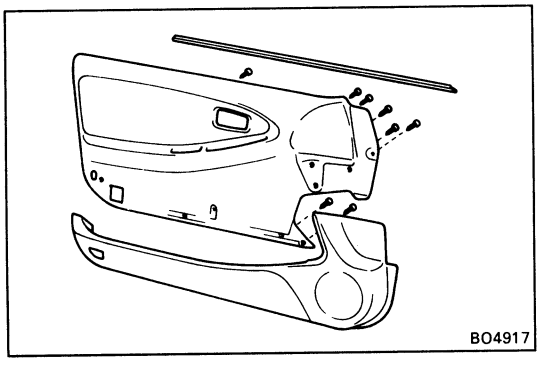

24. INSTALL DOOR TRIM

(a) Install the inner weatherstrip to the door trim.

(b) Install the door trim pocket with eight screws to the door trim.

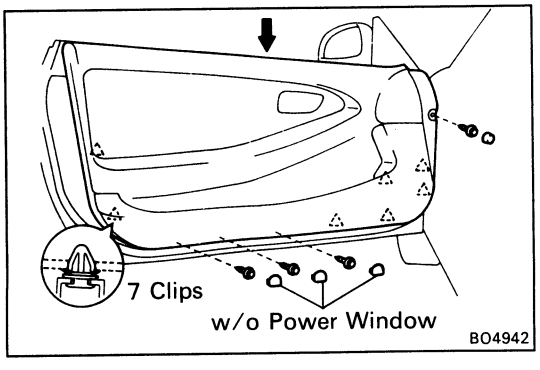

(c) (w/Door Courtesy Light)
Connect the connector.

(d) Insert the upper edge of the trim from above, tap the trim by hand and fix it in place with the clips.

(e) Install four bolts.

(f) (w/o Power Window)
Install three covers.

(g) Install the screw cap.

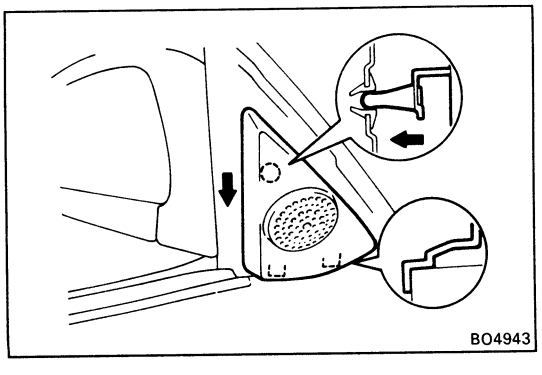

25. INSTALL MIRROR COVER

Insert the lower edge of the cover from above, tap the cover to install it.

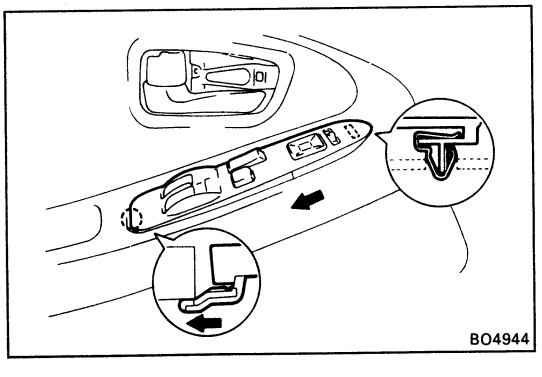

26. (w/Power Window)
INSTALL ARMREST PANEL

(a) Connect the connectors.

(b) Slide the panel rearward and tap the panel to install it.

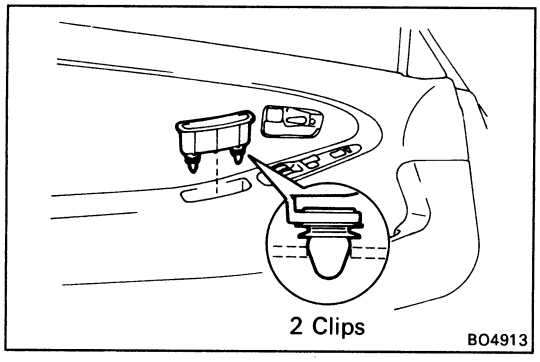

27. INSTALL DOOR PULL HANDLE

Push the pull handle to install it.

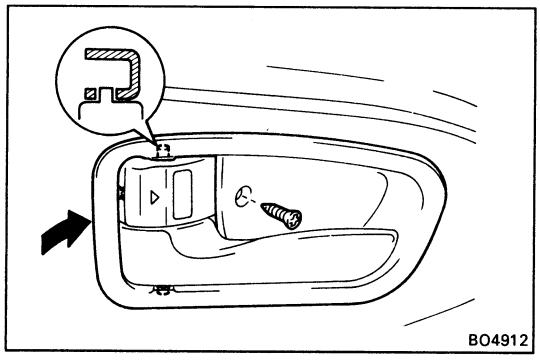

28. INSTALL DOOR INSIDE HANDLE BEZEL

(a) Push in the bezel to install it.

(b) Install the screw.

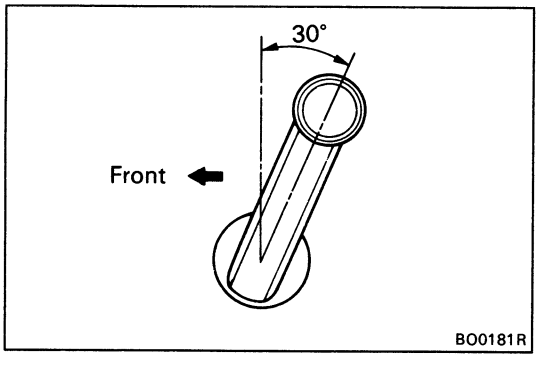

29. (w/o Power Window)
INSTALL REGULATOR HANDLE

With door window fully closed, install the plate and the regulator handle with the snap ring as shown.

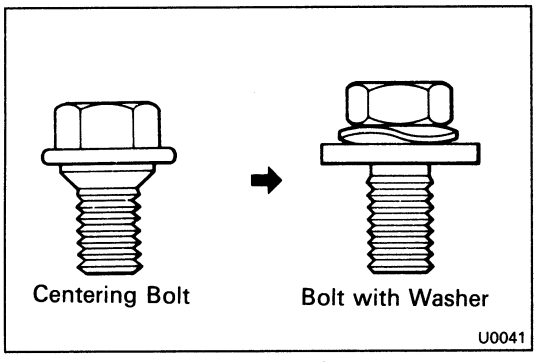

LUGGAGE COMPARTMENT DOOR

ADJUSTMENT OF LUGGAGE COMPARTMENT DOOR

HINT: Since the centering bolt is used as the door hings set bolt, the door cannot be adjusted with it on. Substitute the bolt with the washer for the centering bolt.

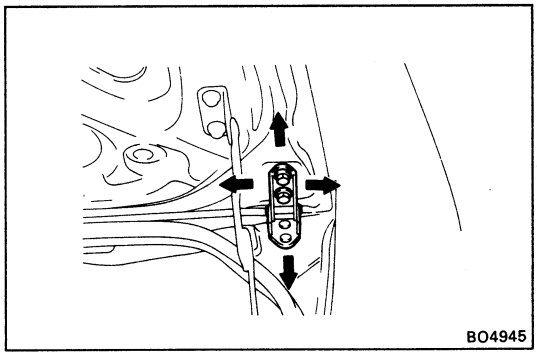

1. ADJUST DOOR IN FORWARD/REARWARD AND LEFT/RIGHT DIRECTIONS

Adjust the door by loosening the door side hinge bolts.

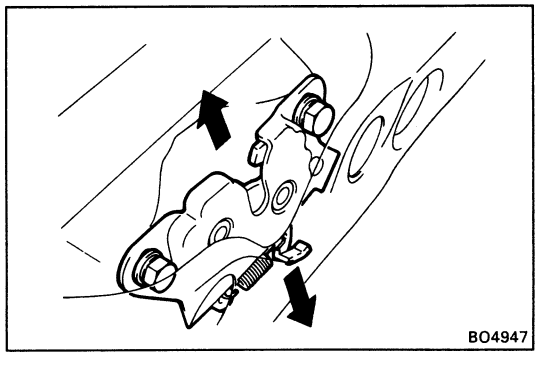

2. ADJUST LUGGAGE COMPARTMENT DOOR LOCK

Adjust the lock by loosening the bolts.

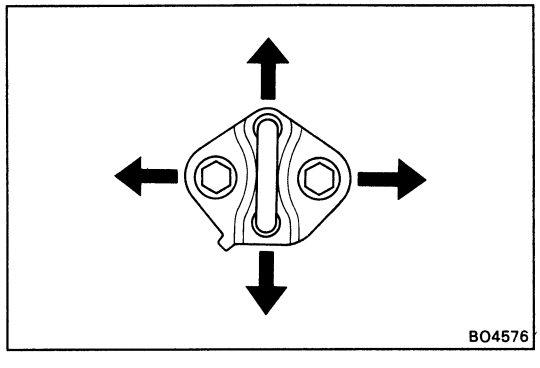

3. ADJUST DOOR LOCK STRIKER

(a) Check that the door fit and door lock are adjusted correctly.

(b) Loosen the striker mounting screws to adjust.

(c) Using a plastic hammer, tap the striker to adjust it.

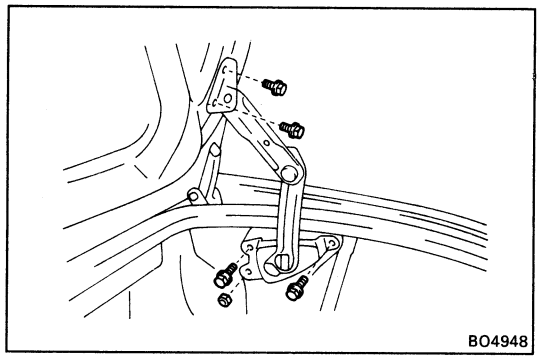

REMOVAL OF LUGGAGE COMPARTMENT DOOR BALANCER

REMOVE LUGGAGE COMPARTMENT DOOR BALANCER

Remove four bolts, the nut and the balancer.

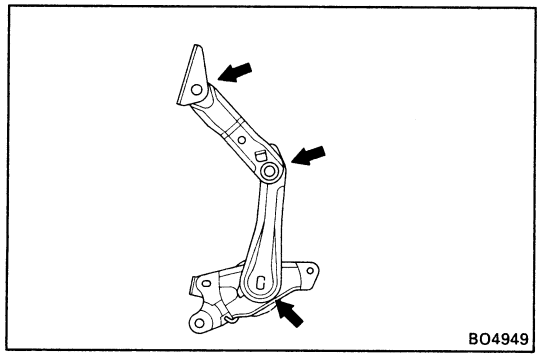

INSTALLATION OF LUGGAGE COMPARTMENT DOOR BALANCER

1. **BEFORE INSTALLING PARTS, COAT THEM WITH MP GREASE**

   (a) Apply MP grease to the sliding surface of the balancer.

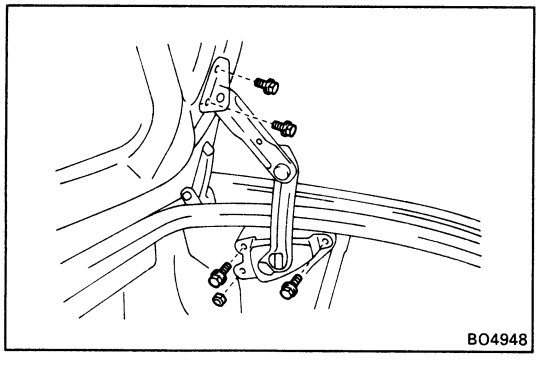

2. **INSTALL LUGGAGE COMPARTMENT DOOR BALANCER**

   Install the balancer with four bolts and the nut.

MOULDING

Windshield Moulding

PREPARE ITEMS LISTED

Part Name	Part No.
Auto glass sealer (Three cement black)	08833-00030

COMPONENTS

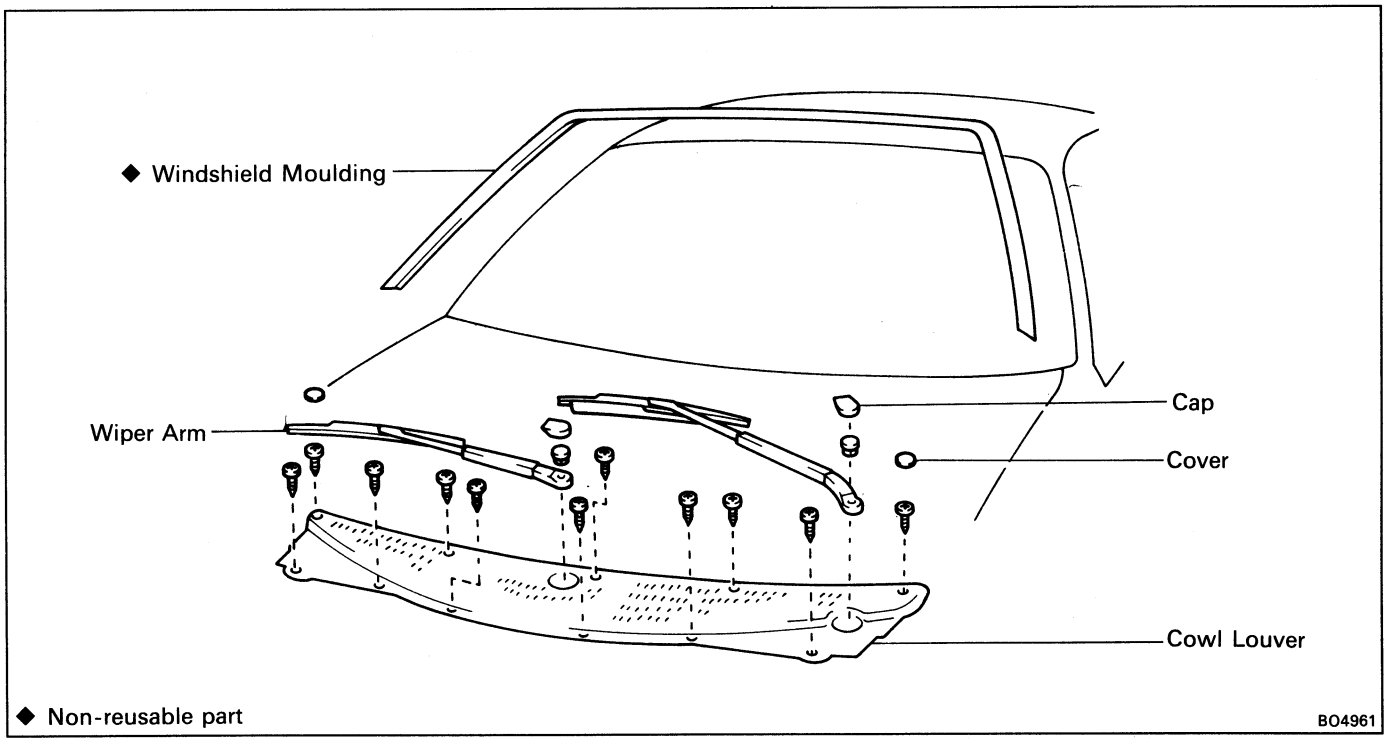

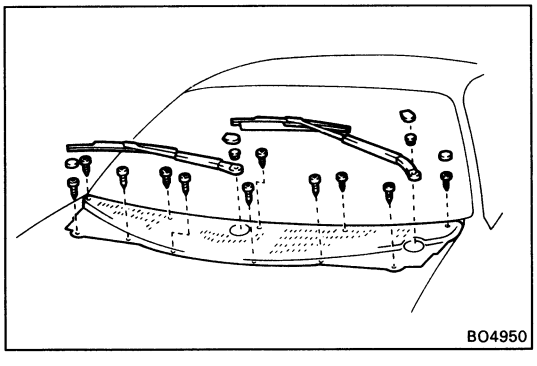

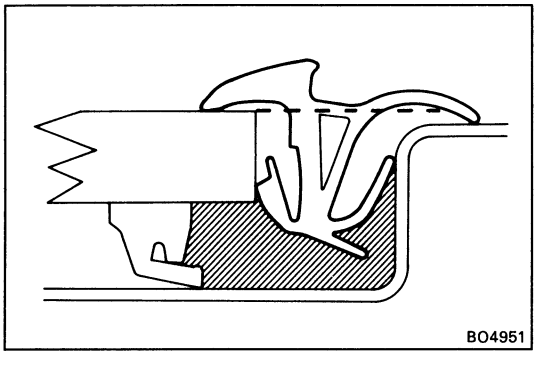

REMOVAL OF WINDSHIELD MOULDING

1. **REMOVE WIPER ARMS**
   (a) Remove two caps.
   (b) Remove two nuts and two wiper arms.

2. **REMOVE COWL LOUVER**
   (a) Remove two covers.
   (b) Remove eleven screws and the cowl louver.

3. **REMOVE WINDSHIELD MOULDING**
   Using a knife, cut off the moulding as shown.
   NOTICE: Do not damage the body with the knife.

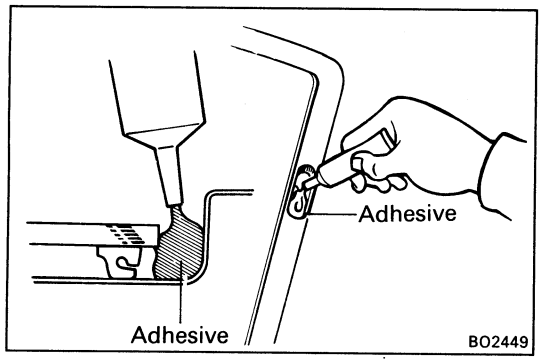

INSTALLATION OF WINDSHIELD MOULDING

(See page BO-24)

1. **CUT ADHESIVE AT MOULDING INSTALLATION AREA**

   Using the knife, cut off the adhesive around the moulding installation area.

2. **APPLY ADHESIVE AT MOULDING INSTALLATION AREA**

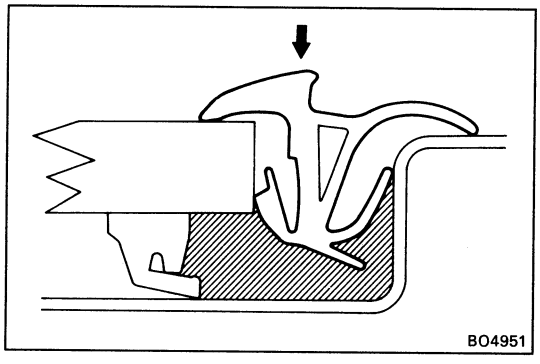

3. **INSTALL WINDSHIELD MOULDING**

   Place the moulding onto the body and tap it by hand.

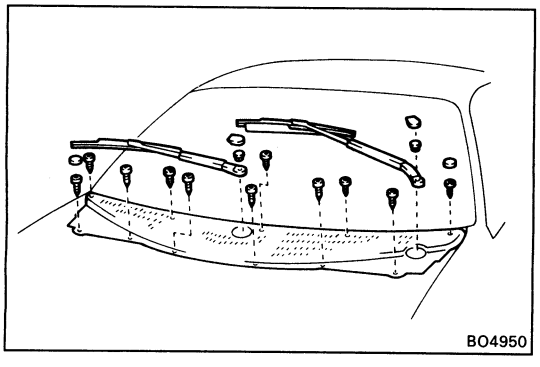

4. **INSTALL COWL LOUVER**
   (a) Install the cowl louver with eleven screws.
   (b) Install two covers.

5. **INSTALL WIPER ARMS**
   (a) Install two wiper arms with two nuts.
   (b) install two caps.

Body Outside Moulding

PREPARE ITEMS LISTED

Part Name and No.	Contents of Set
Butyl tape set (08850-00065)	Butyl tape 9 mm dia. x 2,500 mm (0.35 x 98.43 in.) Primer 5 cc (0.17 fl.oz.) Sponge (for applying primer) Piano wire 1 mm dia. x 600 mm (0.04 x 23.62 in.) (for slicing off glass)
Materials required	Cleaner (for cleaning adhering surfaces)

COMPONENTS

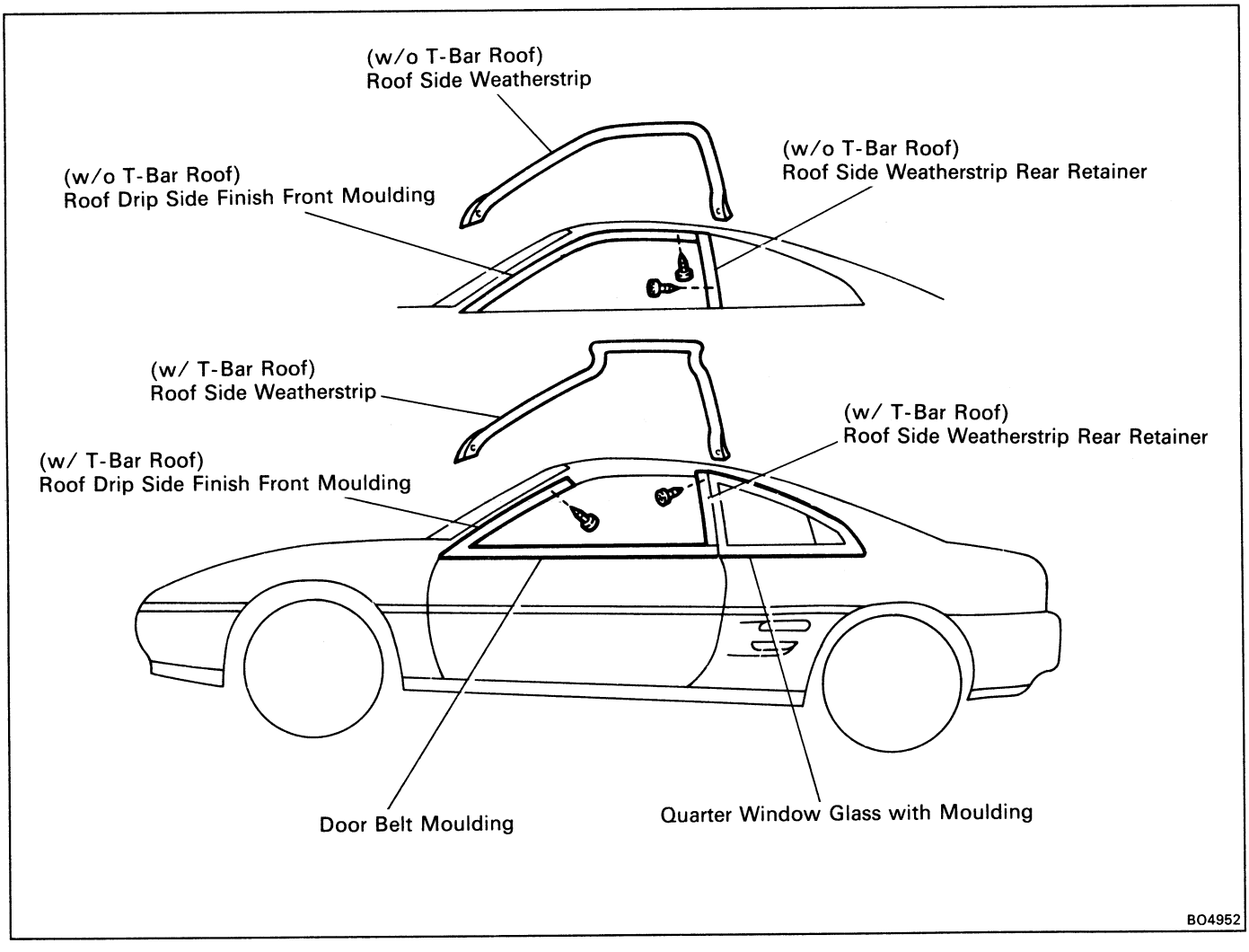

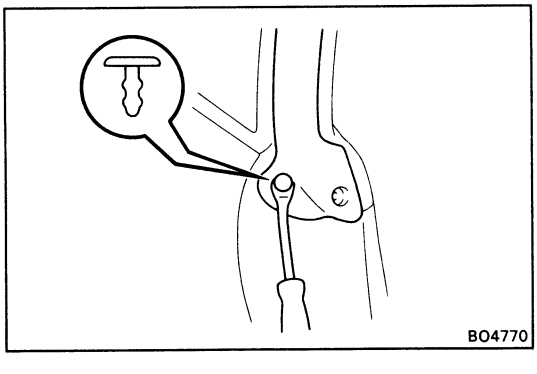

Roof Drip Moulding

REMOVAL

1. **REMOVE ROOF SIDE WEATHERSTRIP**
   (a) Using the clip remover, remove four clips from the weatherstrip.
   (b) Remove the weatherstrip from the moulding and the retainer.

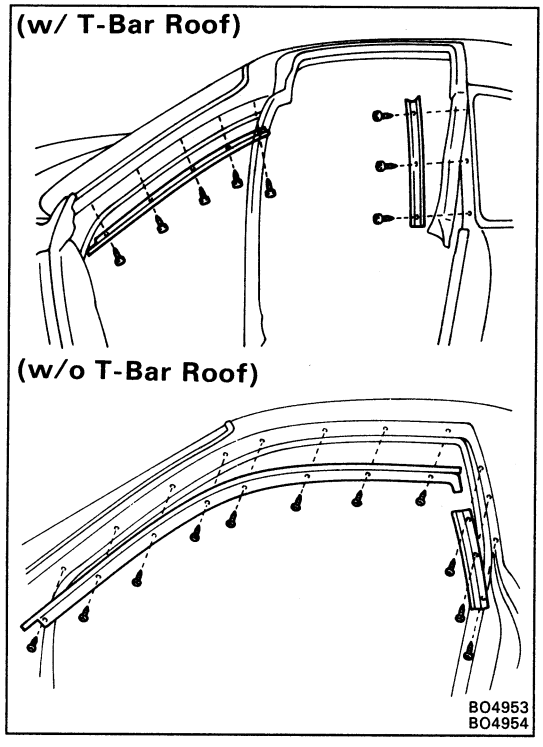

2. **REMOVE ROOF DRIP SIDE FINISH FRONT MOULDING**

   (w/ T-Bar Roof)
   Remove four screws and the moulding.

   (w/o T-Bar Roof)
   Remove eight screws and the moulding.

3. **REMOVE ROOF SIDE WEATHERSTRIP REAR RETAINER**

   Remove three screws and the retainer

INSTALLATION

1. **INSTALL ROOF SIDE WEATHERSTRIP REAR RETAINER**

   Install the retainer with three screws.

2. **INSTALL ROOF DRIP SIDE FINISH FRONT MOULDING**

   (w/ T-Bar Roof)
   Install the moulding with four screws.

   (w/o T-Bar Roof)
   Install the moulding with eight screws.

3. **CLEAN BODY**

   Wipe off any adhesive left on the body with cleaner.

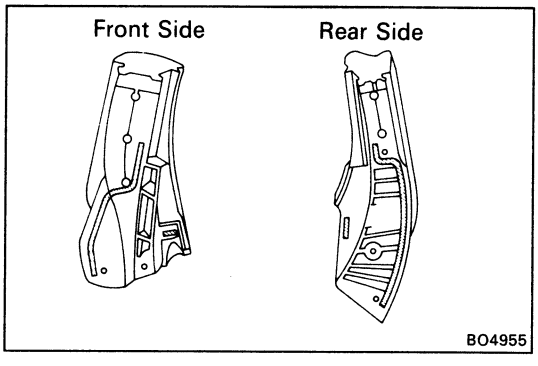

4. **INSTALL ROOF SIDE WEATHERSTRIP**
   (a) Install the seal to the weatherstrip as shown.
   (b) Install the weatherstrip to the moulding and the retainer.
   (c) Install four clips.

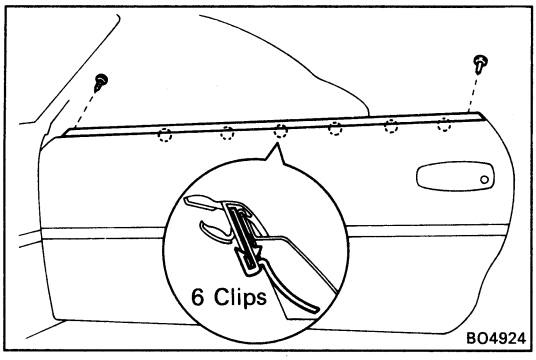

Door Belt Moulding

REMOVAL

1. **REMOVE FRONT DOOR COMPONENT PARTS:**
   (See steps 1, 2, 3, 4, 5, 6, 11, 12 and 14 on pages BO-10 to 13)
2. **REMOVE DOOR BELT MOULDING**
   (See step 15 on page BO-13)

INSTALLATION

1. **INSTALL DOOR BELT MOULDING**
   (See step 12 on page BO-17)
2. **INSTALL FRONT DOOR COMPONENT PARTS:**
   (See steps 13, 15, 16, 24, 25, 26, 27, 28 and 29 on pages BO-17 to 21)

Quarter Window Glass with Moulding

REMOVAL

(See steps 1 to 10 on pages BO-42 to 43)

INSTALLATION

(See steps 1 to 12 on pages BO-43 to 44)

Side Protection Moulding

PREPARE ITEMS LISTED

Part No.	Part name	Quantity
08850-00051	Adhesive (Super special) 20g (0.71 oz.)	1
	Cleaner (for cleaning body and removing body oil stains) Heat light	

Precautions for storing moulding material:

- Store in cool place, avoiding direct sunlight, high temperature and dust.
- The moulding is of polyvinyl chloride, so do not allow it to come in contact with thinner or other solvent, open flame, or boiling water.
- The storage time for the moulding and adhesive are limited to about 9 months.

COMPONENTS

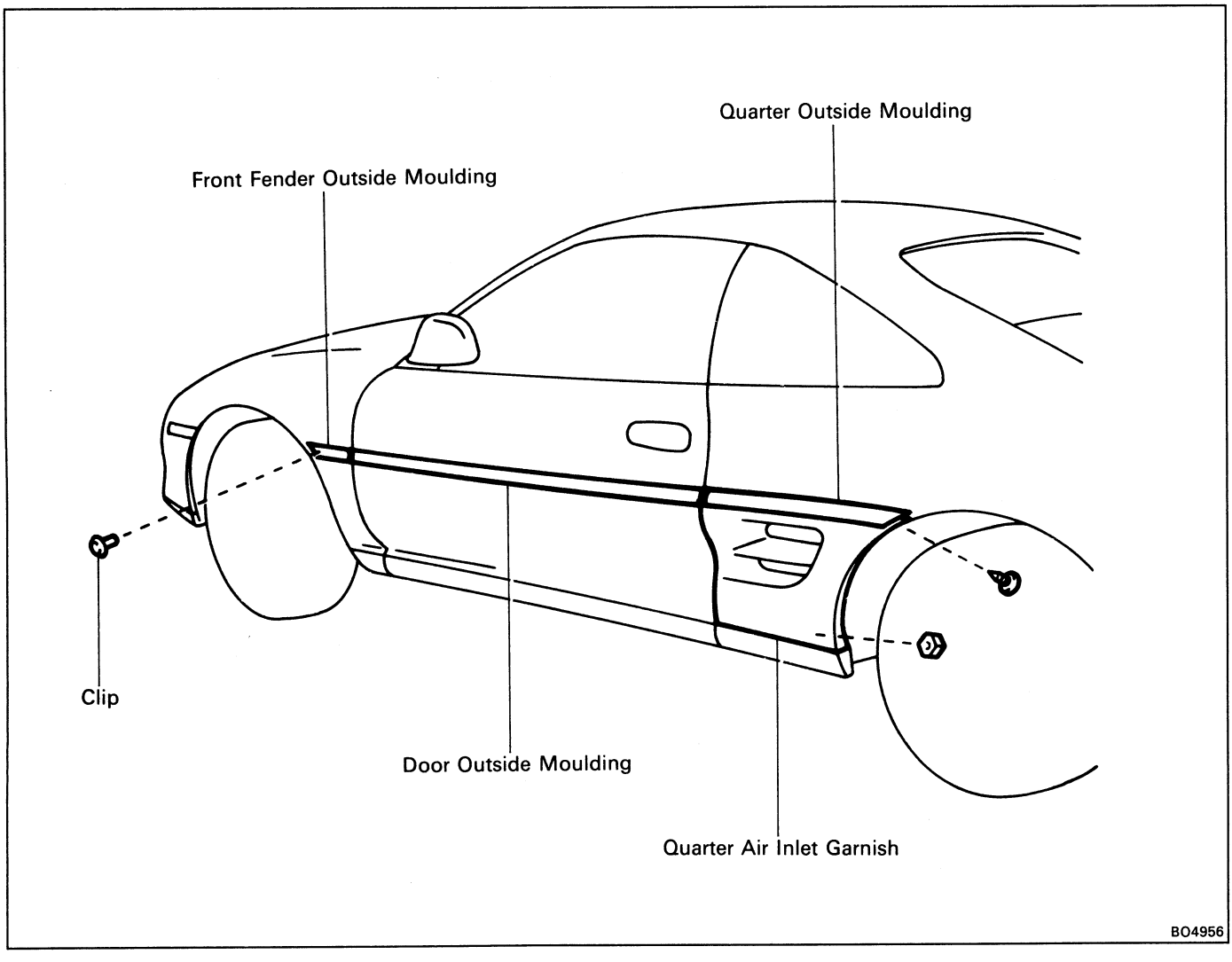

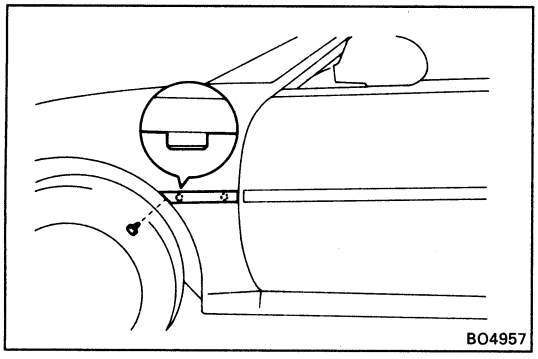

REMOVAL OF SIDE PROTECTION MOULDING

(See page BO-29)

1. REMOVE FRONT FENDER OUTSIDE MOULDING

(a) Using the clip remover, remove the clip from the moulding.

(b) Pull off the moulding by cutting the adhesive with a knife.

(See step 3 on page BO-30)

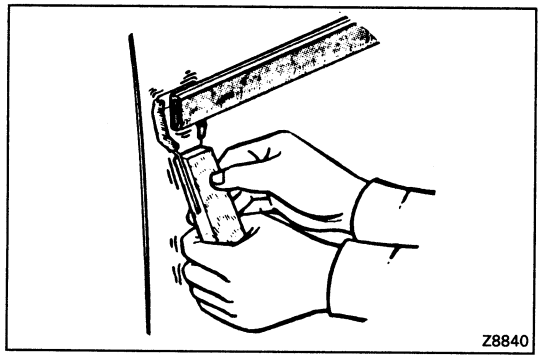

2. REMOVE ENDS OF MOULDING

Using a scraper, pry the moulding loose about 30 mm (1.18 in.) from the ends.

HINT: Tape the scraper tip before use.

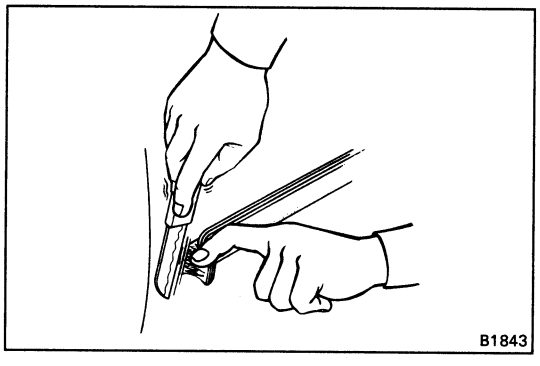

3. REMOVE MOULDING AND ADHESIVE

(a) Pull off the moulding by cutting the adhesive with a knife.

(b) Scrape off adhesive from the body with a cutter of sandpaper.

NOTICE:

- **Remember that 30 – 80 mm (1.18 – 3.15 in.) of the ends of the moulding are glued tightly with a strong adhesive.**
- **Do not reuse moulding.**

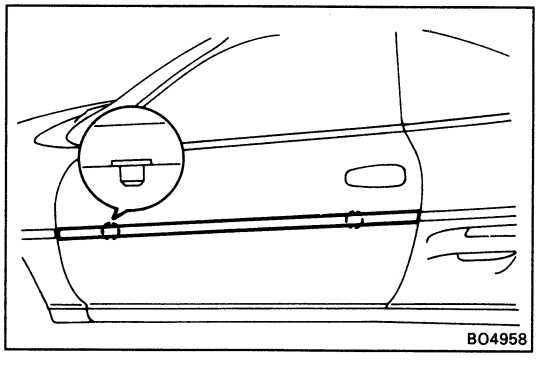

4. REMOVE DOOR OUTSIDE MOULDING

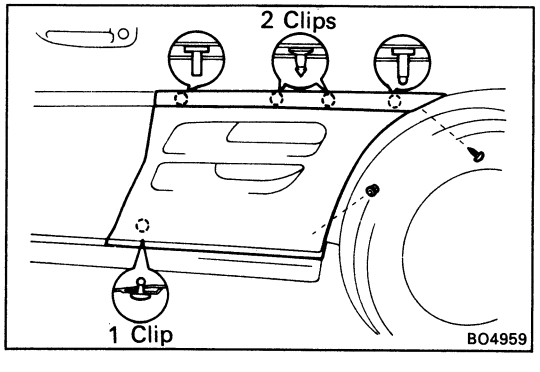

5. REMOVE QUARTER OUTSIDE MOULDING

Remove the screw and the moulding.

6. REMOVE QUARTER AIR INLET GARNISH

(a) Remove the nut.

(b) Insert the screwdriver between the garnish and the panel to pry out, and remove it.

HINT: Tape the screwdriver tip before use.

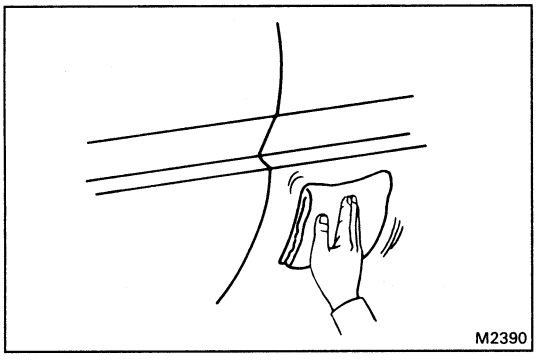

INSTALLATION OF SIDE PROTECTION MOULDING

(See page BO-29)

1. CLEAN MOULDING MOUNTING SURFACE

Wipe off stains with cleaner.

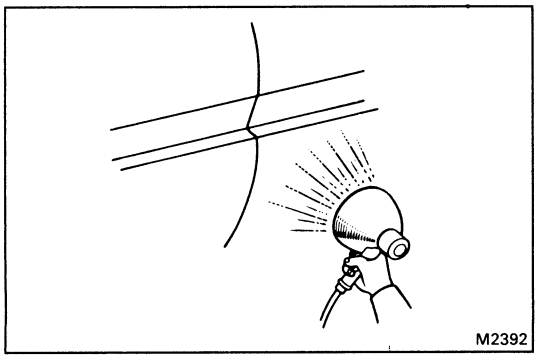

2. HEAT BODY MOUNTING SURFACE

Using a heat light, heat the body mounting surface to 30 – 50°C (86 – 122°F).

NOTICE: When the moulding is installed, the temperature of the mounting surface should be 20°C (68°F) or higher.

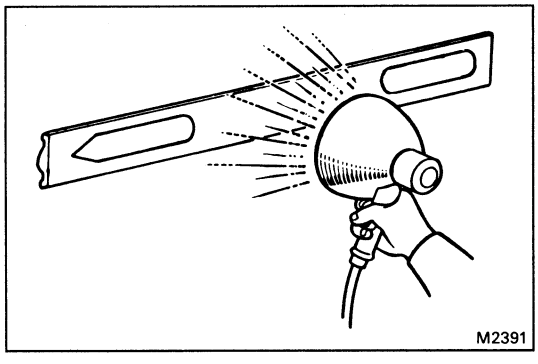

3. HEAT MOULDING

Using a heat light, heat the moulding to 30 – 60°C (86 – 140°F).

NOTICE: Do not heat moulding excessively.

The temperature should not be higher than 80°C (176°F).

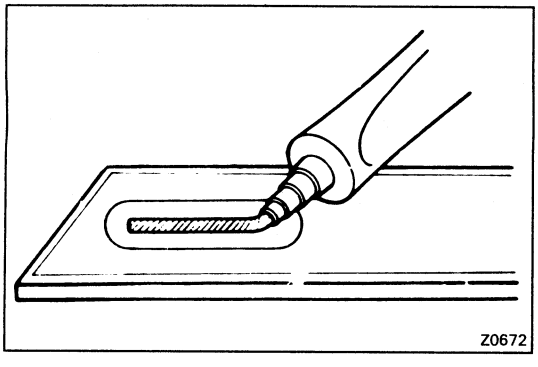

4. APPLY ADHESIVE TO DOOR OUTSIDE MOULDING

Apply adhesive to both punched out ends of the moulding.

NOTICE: Install the moulding within 7 minutes after applying the adhesive.

5. LIFT MOULDING RELEASE SHEET FROM FACE OF MOULDING

NOTICE: When the moulding release sheet is removed, be sure that no dirt or dust can get onto the uncoated area.

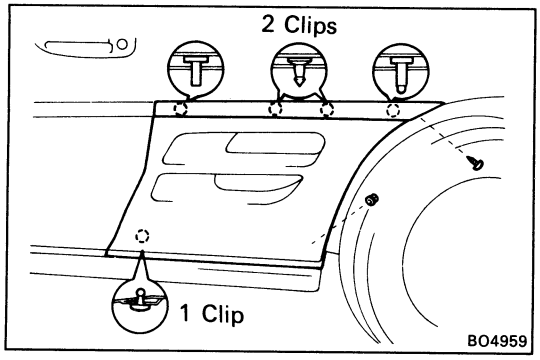

6. **INSTALL QUARTER AIR INLET GARNISH**
   (a) Tap the garnish and fix it in place with the clip.
   (b) Install the nut.

7. **INSTALL MOULDING ALONG BODY PRESS LINE**
   (a) Align the bosses on the moulding with the body holes, and push the moulding to the body.
   (b) Install the screw to the quarter outside moulding.

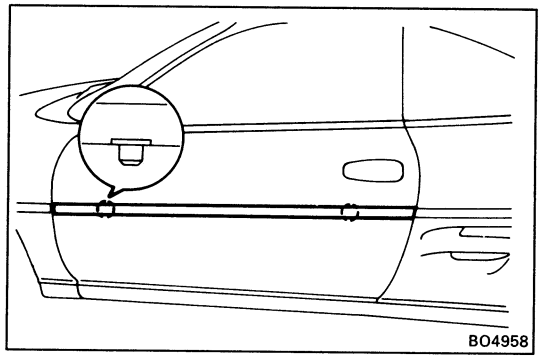

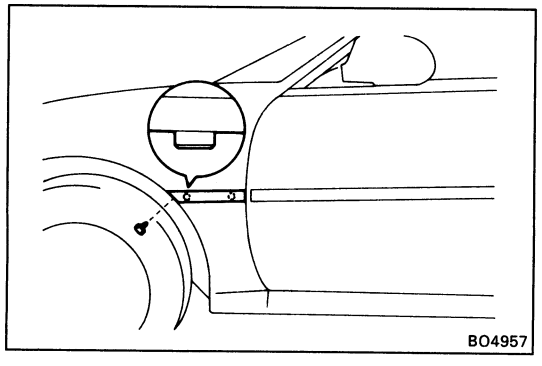

(c) Install the clip to the front fender outside moulding.

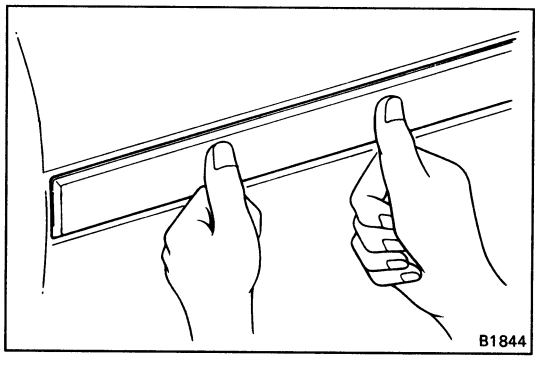

NOTICE:

- **Be sure that the body and moulding are heated to the proper temperature.**
- **Do not depress the adhesive-coated parts excessively just hold them down with your thumb.**
- **Scrape off any overflowing adhesive with a plastic spatula and clean the surface with a dry rang.**
- **After installation, do not wash the vehicle for 24 hours.**

Back Window Moulding

COMPONENTS

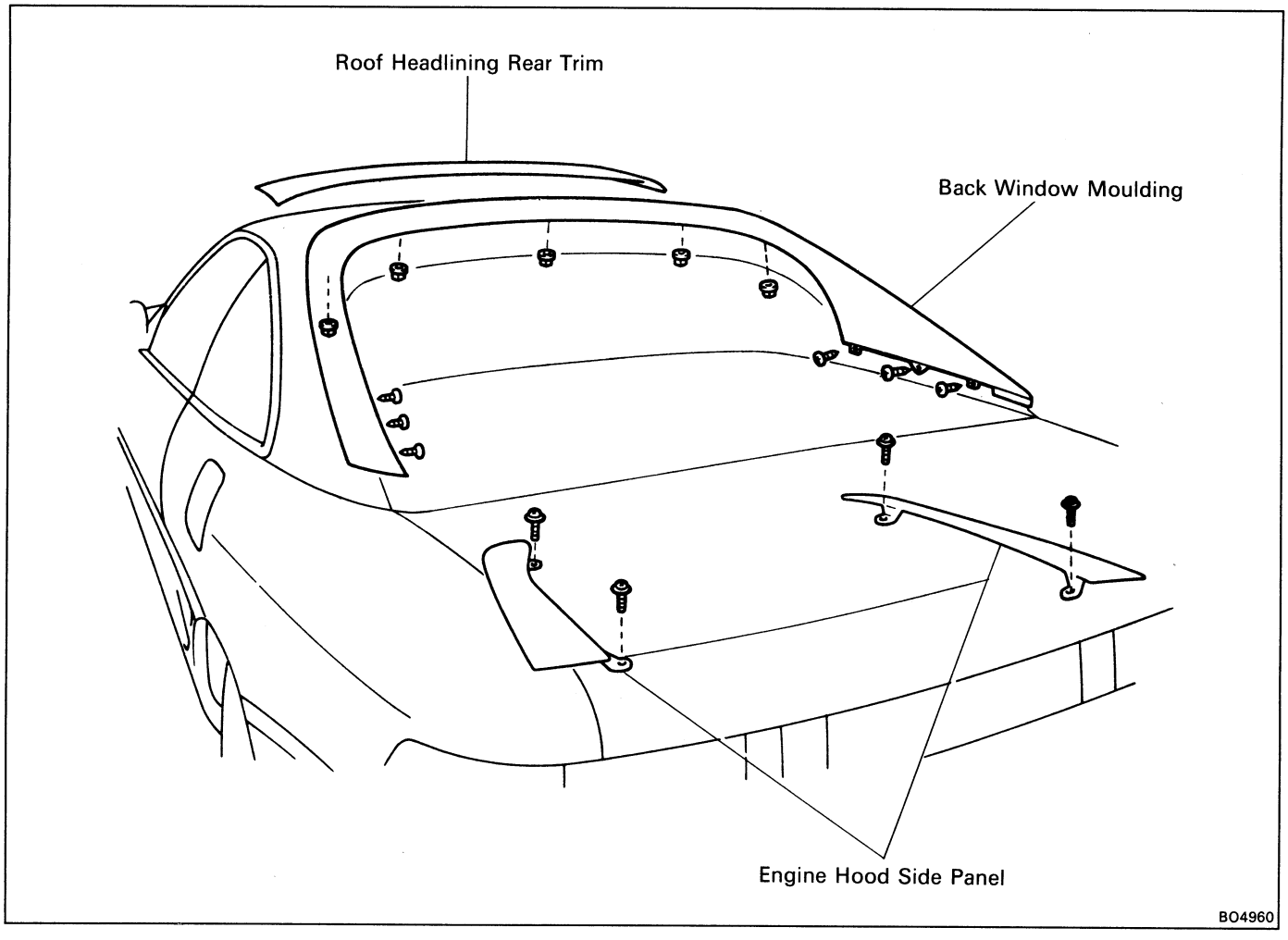

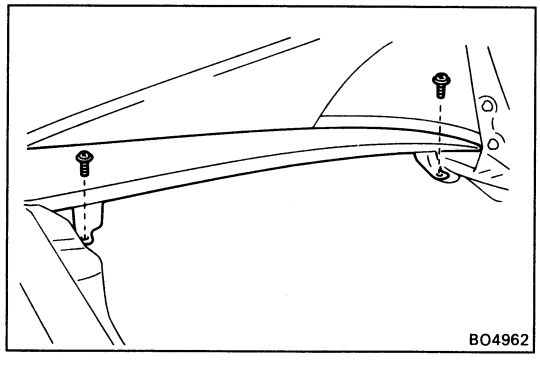

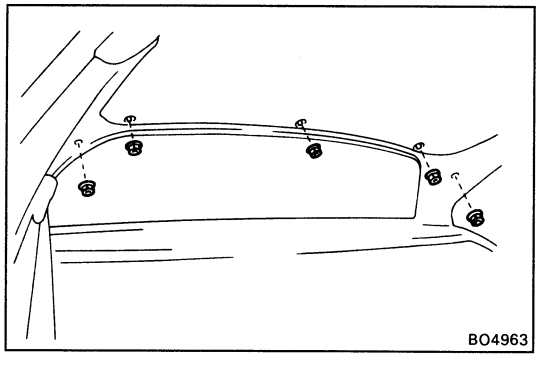

REMOVAL OF BACK WINDOW MOULDING

1. **REMOVE ENGINE HOOD SIDE PANELS**
   Remove four screws and two panels.

2. **REMOVE FOLLOWING PARTS**
   (See steps 1 to 6 on page BO-42)
   (a) Door scuff plate
   (b) Roof headlining rear trim
   (c) Room partition trim moulding
   (d) Quarter trim panel
   (e) Seat belt shoulder anchor
   (f) Roof side inner garnish

3. **REMOVE BACK WINDOW MOULDING**
   (a) Remove five nuts.

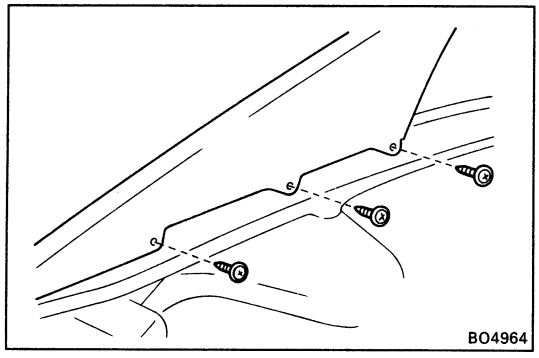

(b) Remove six screws.

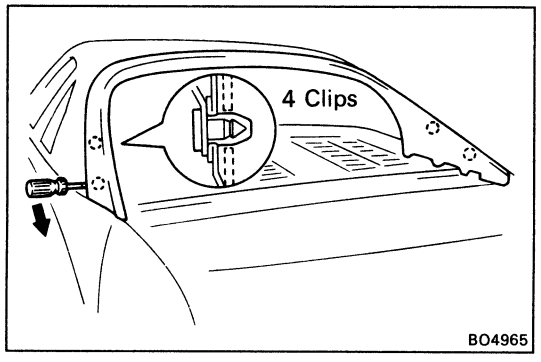

(c) Insert the screwdriver between the moulding and the panel to pry out.

HINT: Tape the screwdriver tip before use.

(d) Pull the moulding upward to remove it.

NOTICE: Do not damage the body.

INSTALLATION OF BACK WINDOW MOULDING

(See page BO-33)

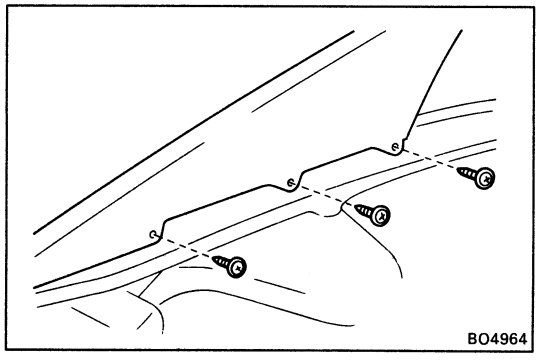

1. INSTALL BACK WINDOW MOULDING

(a) Tap the moulding and, fix it in place with the clips.

(b) Install six screws.

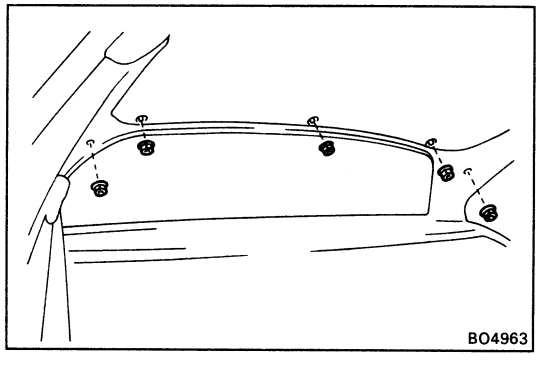

(c) Install five nuts.

2. INSTALL FOLLOWING PARTS:

(a) Roof side inner garnish

(b) Seat belt shoulder anchor

Torque: 440 kg/cm (32 ft-lb, 43N·m)

(c) Quarter trim panel

(d) Room partition trim moulding

(e) Roof headlining rear trim

(f) Door scuff plate

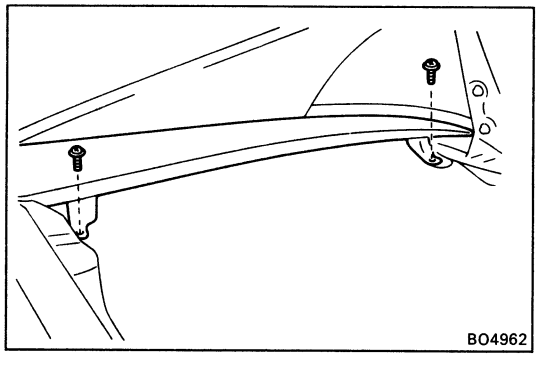

3. INSTALL ENGINE HOOD SIDE PANELS

Install two panels with four screws.

WINDSHIELD

PREPARE ITEMS LISTED

Part name and No.	Contents of set	Quantity
Adhesive set 08850-00070 (0-15°C or 32-59°F) 08850-00080 (15-35°C or 59-95°F) 08850-00090 (35-45°C or 95-113°F)	Main agent 550g (17.64 oz.) Hardening agent 75g (2.65 oz.) Primer G (for glass) 20g (0.71 oz.) Primer M (for body) 20g (0.71 oz.) Sponge (for applying primer) Piano wire 0.6 mm dia. x 1 m (0.024 x 39.37 in.) Cartridge	1 ea. 1 ea. 1 ea. 1 ea. 2 ea. 1 ea. 1 set.
Dam kit 04562-12010	Dam Double stick tape (for sticking on dam)	
	Sealant gun (for applying adhesive) Glass or steel sheet (for mixing adhesive) Putty spatula (for mixing adhesive and correcting adhered parts) Cleaner (for cleaning adhering surface)	

Ambient temperature	Part No.	Part name
0 – 15°C (32 – 59°F)	08850-00070	Windshield glass adhesive set No. 15
15 – 35°C (59 – 95°F)	08850-00080	Windshield glass adhesive set No. 35
35 – 45°C (95 – 113°F)	08850-00090	Windshield glass adhesive set No. 45

1. CHOOSE SUITABLE ADHESIVE SET

Using an adhesive set suitable for the ambient temperature.

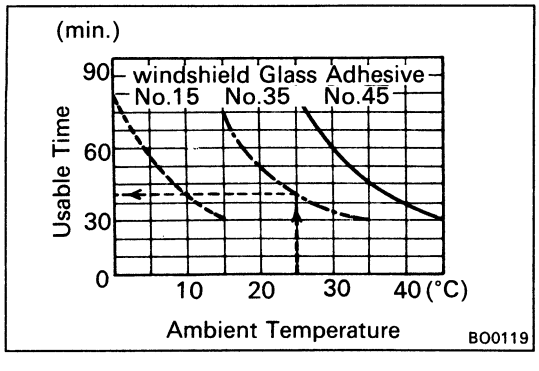

2. CHECK ADHESIVE USABLE TIME

After the mixing main and hardening agents, finish glass installation within the specified time as shown.

Example: For glass installation in an ambient temperature of 25°C (77°F), apply adhesive set No. 35 within 45 minutes.

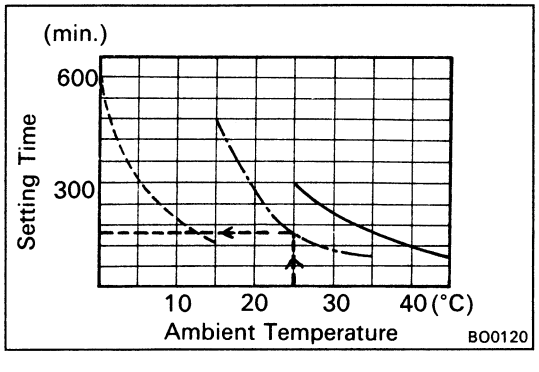

3. CHECK ADHESIVE HARDENING TIME

After main and hardening agents are mixed, leak tests should be made only after the hardening time has elapsed.

Example: The hardening time for adhesive set No. 35 with an ambient temperature of 25°C (77°F) is 2.5 hours.

NOTICE: Do not drive the vehicle until at least double the hardening time has elapsed.

COMPONENTS

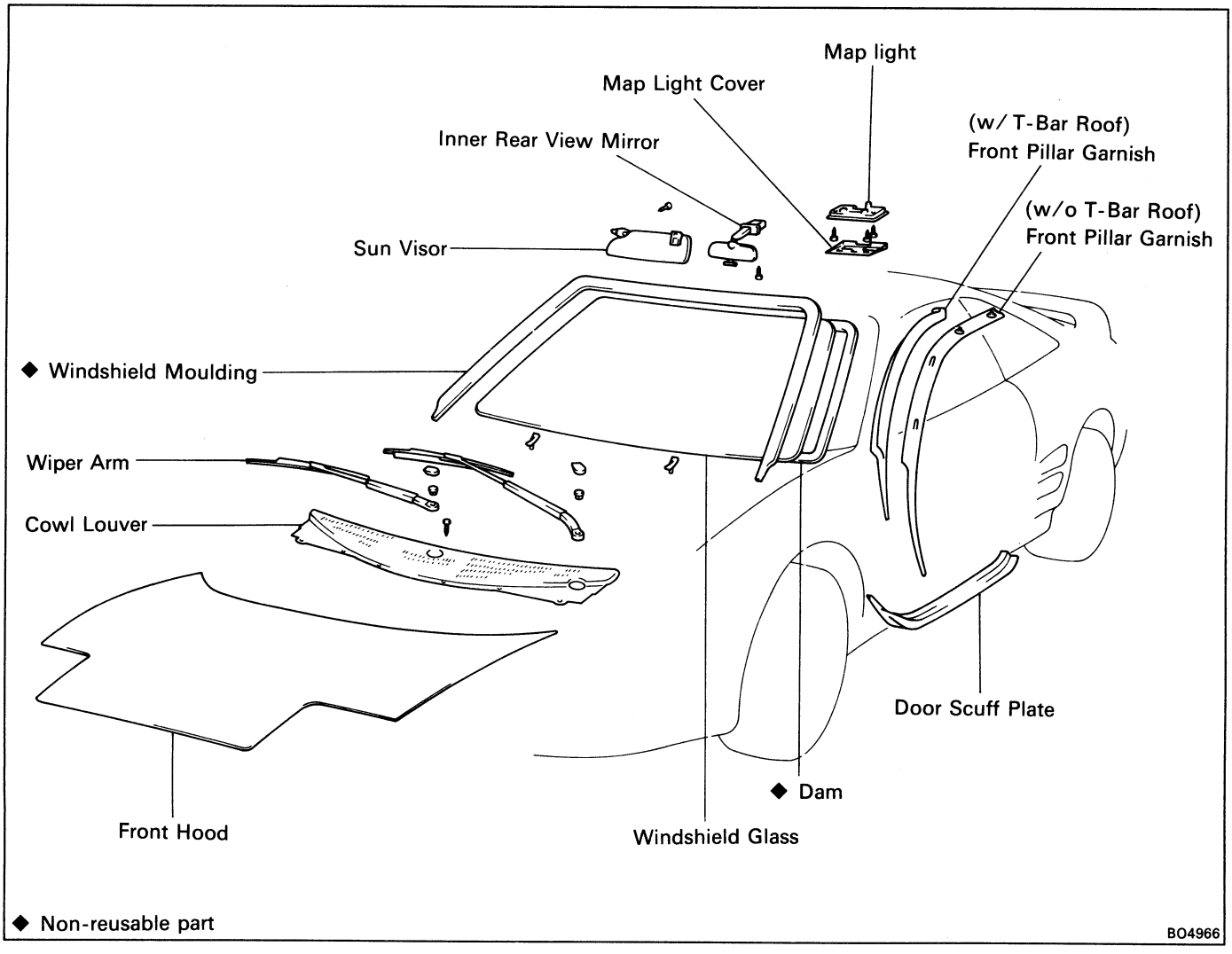

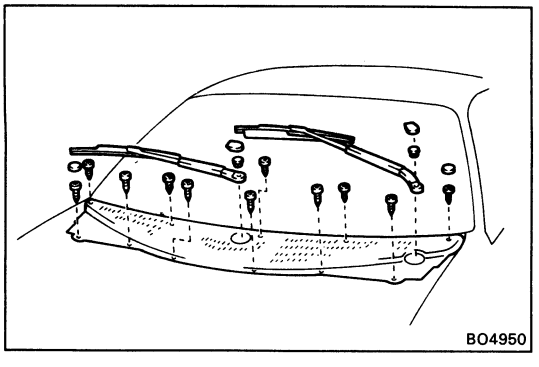

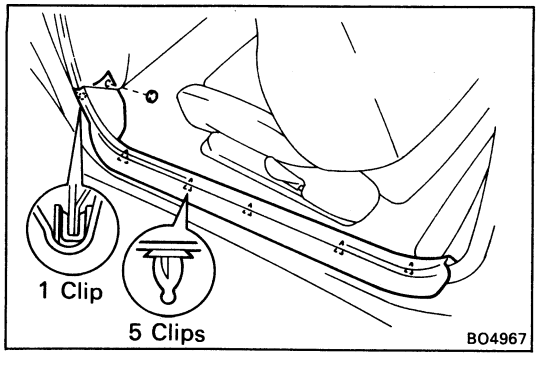

REMOVAL OF WINDSHIELD

1. **REMOVE FRONT HOOD**
2. **REMOVE WIPER ARMS**
   (a) Remove two caps.
   (b) Remove two nuts and two wiper arms.
3. **REMOVE COWL LOUVER**
   (a) Remove two covers.
   (b) Remove eleven screws and the cowl louver.
4. **REMOVE DOOR SCUFF PLATE**
   (a) Remove the cap.
   (b) Remove the scuff plate by pulling.

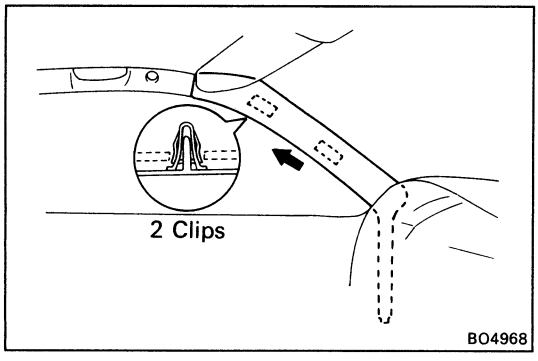

5. REMOVE FRONT PILLAR GARNISH
(w/ T-Bar Roof)

(a) Remove the removable roof.
(b) Remove the clips by your hand.
(c) Pull the garnish rearwards to remove it.

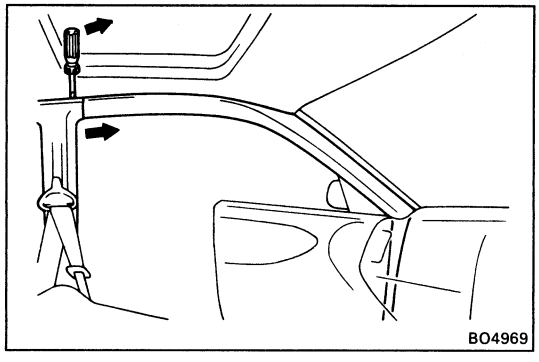

(w/o T-Bar Roof)

(a) Pull out the garnish from the roof side inner garnish.

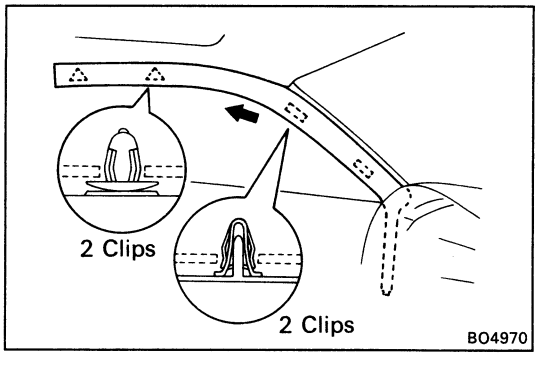

(b) Remove the clips by your hand.
(c) Pull the garnish rearwards to remove it.

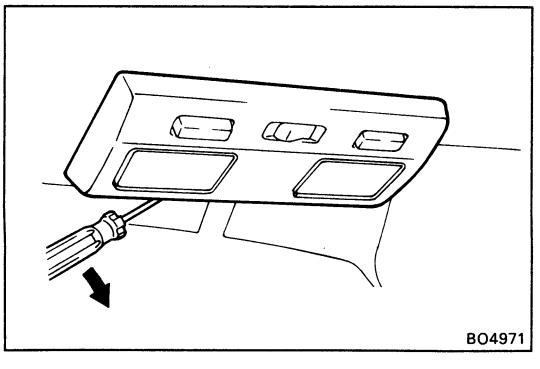

6. REMOVE MAP LIGHT COVER

Using the screwdriver, remove the cover.

HINT: Tape the screwdriver tip before use.

7. REMOVE MAP LIGHT

Remove three screws and the light.

8. REMOVE FOLLOWING PARTS:

- Inner rear view mirror
- Sun visors and holders

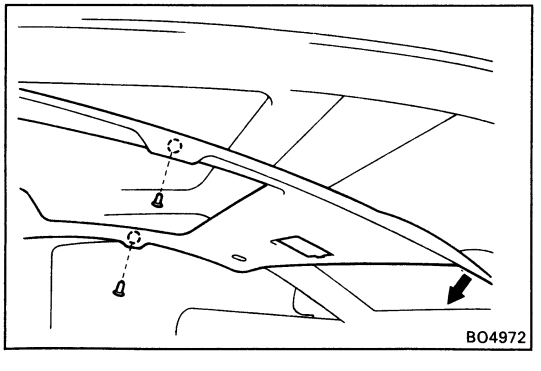

9. PULL DOWN FRONT SIDE OF ROOF HEADLINING

(a) Remove two clips.
(b) Pull down the headlining by hand.

NOTICE: Do not damage the roof headlining.

10. REMOVE WINDSHIELD MOULDING
(See step 3 on page BO-24)

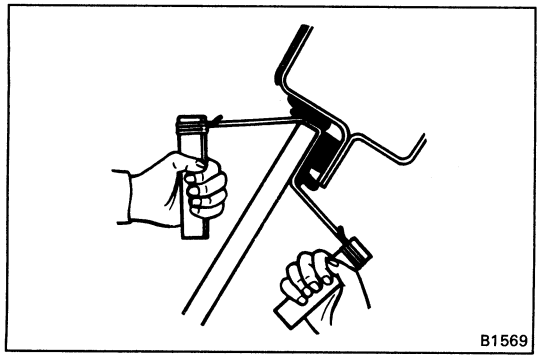

11. REMOVE WINDSHIELD GLASS

(a) Push piano wire through from the interior.

(b) Tie both wire ends to a wooden block or like object.

HINT: Apply adhesive tape to the outer surface to keep the surface from being scratched.

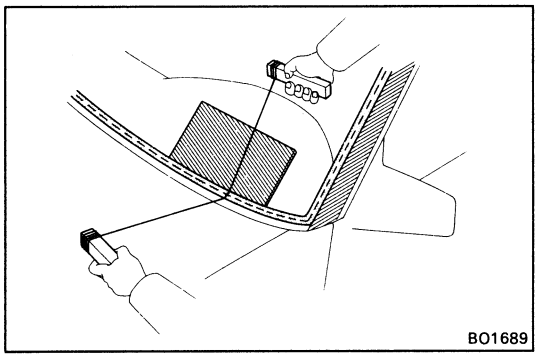

NOTICE: When separating, take care not to damage the paint and interior and exterior ornaments.

To prevent scratching the safety pad when removing the windshield, place a plastic sheet between the piano wire and safety pad.

(c) Cut the adhesive by pulling the piano wire around it.

(d) Remove the glass.

NOTICE: Leave as much of the urethane layer on the body as possible when cutting off the glass.

INSTALLATION OF WINDSHIELD

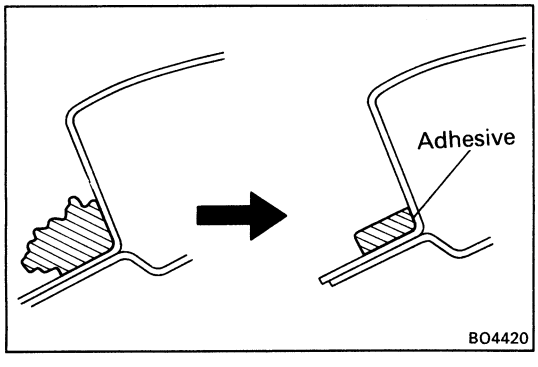

1. CLEAN AND SHAPE CONTACT SURFACE OF BODY

(a) Remove the retainers.

(b) Remove any dam remaining on the body.

(c) Cut away any rough areas with a knife.

HINT: Leave as much of the urethane layer on the body as possible.

(d) Clean the cutting surface of the urethane gum with a piece of shop rag saturated in cleaner.

HINT: Even if all the urethane has been removed, clean the body.

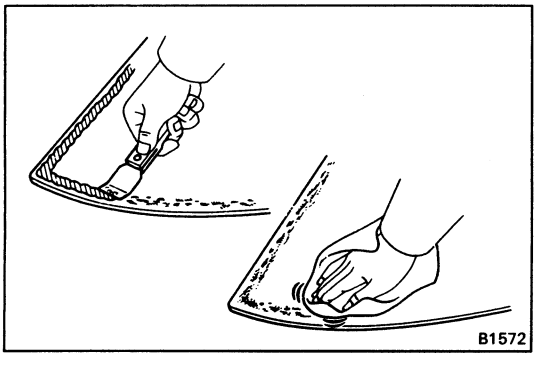

2. CLEAN REMOVED GLASS BEFORE INSTALLATION

(a) Using a scraper, remove the urethane gum sticking to the glass.

(b) Clean the glass with cleaner.

NOTICE: Do not touch the glass after cleaning it.

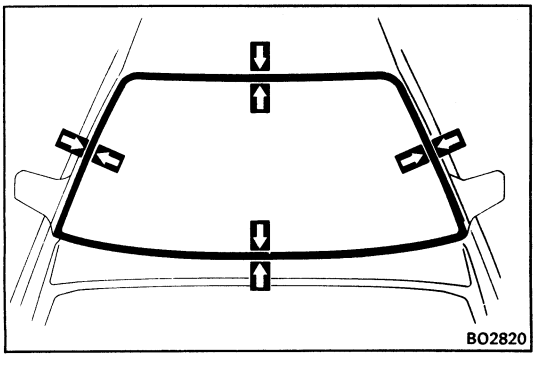

3. POSITION GLASS

(a) Place glass in correct position.

(b) Check that all contacting parts of the glass rim are perfectly even and do not make contact with the fasteners.

(c) Place reference marks between the glass and body.

(d) Remove the glass.

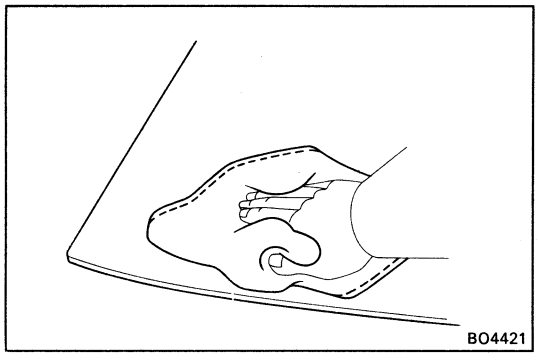

4. CLEAN CONTACT SURFACE GLASS

Using cleaner, clean the contact surface black-colored area around the entire glass rim.

NOTICE: Do not touch the glass face after cleaning it.

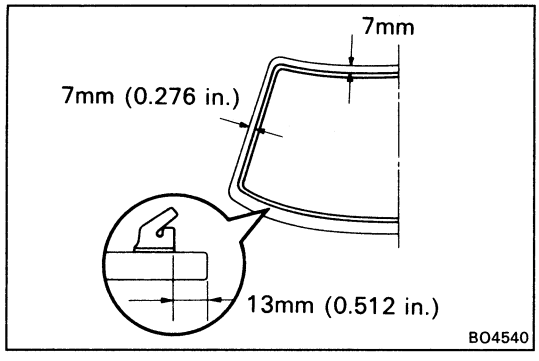

5. INSTALL DAM

Install the dam with double-stick tape as shown in the drawing.

NOTICE: Do not touch the glass face after cleaning it.

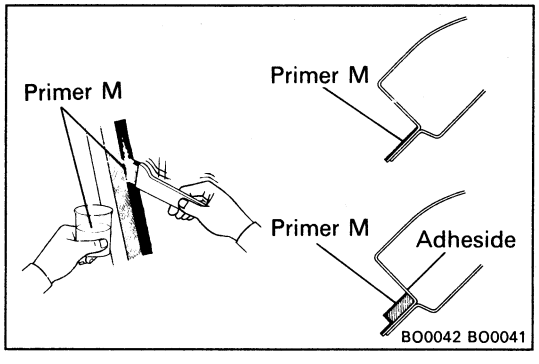

6. COAT CONTACT SURFACE OF BODY WITH PRIMER "M"

Using a brush, coat the contact surface on the body with Primer M.

NOTICE:

- **Let the Primer coating dry for 10 minutes or more. Make sure that the installation of the glass is finished within 2 hours.**
- **Use care not to leave any part of the contact surface uncoated or excessively coated, as Primer M and G serve to boost the adhesive power of the urethane to the glass or body.**
- **Do not keep any of the opened Primer M and G for later use.**

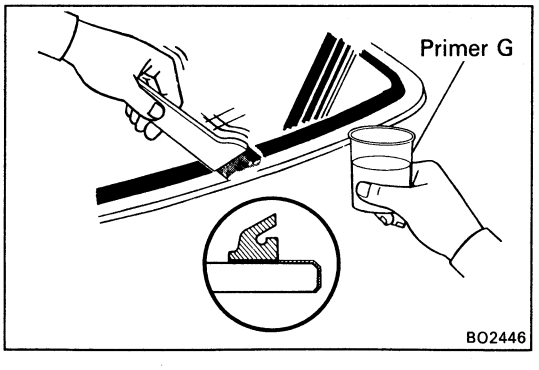

7. COAT CONTACT SURFACE OF GLASS WITH PRIMER "G"

(a) Using a brush or sponge, coat the edge of the glass and the contact surface with Primer G.

(b) Before the Primer dries, wipe it off with a clean cloth.

NOTICE: Be sure that installation of the glass is finished within 70 minutes.

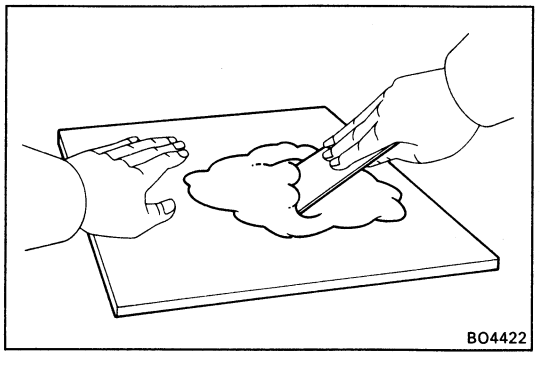

8. MIX ADHESIVE COATING

NOTICE:

- **Be sure that installation of the glass is finished within usable time. (See step 2 on page BO-35)**
- **The mixture should be made in 5 minutes or less.**

(a) Thoroughly clean the glass plate and putty spatula with solvent.

(b) Thoroughly mix 500g (17.64 oz.) of the main agent and 75g (2.65 oz.) of the hardening agent on a glass plate or like object with a putty spatula.

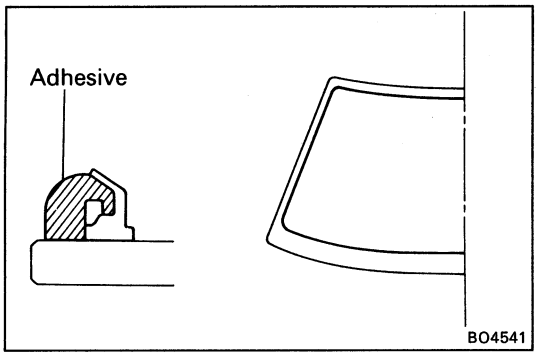

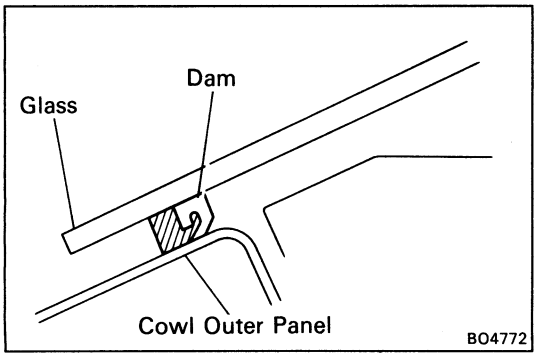

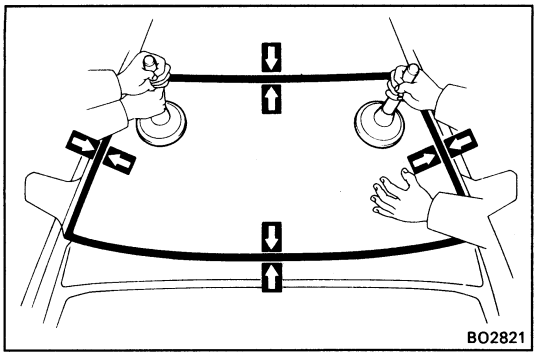

9. APPLY ADHESIVE

(a) Cut off the tip of the cartridge nozzle to make a hole 5 mm (0.20 in.) in diameter. Fill the cartridge with adhesive.

(b) Load the cartridge into the sealer gun.

(c) Coat the glass with adhesive on all contact surfaces along the ridge.

Adhesive height:

If adhesive remains on body
3.5 – 5.0 mm (0.138 – 0.197 in.)

If no adhesive remains on body
8 – 10 mm (0.31 – 0.39 in.)

10. INSTALL GLASS

HINT: Confirm that the dam is attached the body panel as shown in the drawing.

(a) Position the glass so that the reference marks are lined up, and press in gently along the rim.

(b) Using a spatula, apply adhesive on the glass rim.

(c) Use a spatula to remove any excess or protruding adhesive.

(d) Fasten glass securely until the adhesive sets.

11. INSPECT FOR LEAKS AND REPAIR

(a) Perform a leak test after the hardening time has elapsed.

(b) Seal any leaks with auto glass sealer.

Part No. 08833-00030 or equivalent

12. INSTALL FOLLOWING PARTS:

- Windshield moulding (See page BO-25)
- Front side of roof headlining
- Inner rear view mirror, sun visors and holders
- Map light and map light cover
- Front pillar garnish and door scuff plate
- Cowl louver and wiper arms

13. INSTALL AND ADJUST FRONT HOOD (See page BO-6)

NOTICE: Wait at least twice the setting time before driving the car.

QUARTER WINDOW GLASS

PREPARE ITEMS LISTED

Part Name and No.	Contents of Set
Butyl tape set (08850-00065)	Butyl tape 9 mm dia. x 2,500 mm (0.35 x 98.43 in.) Primer 5 cc (0.17 fl.oz.) Sponge (for applying primer) Piano wire 1 mm dia. x 600 mm (0.04 x 23.62 in.) (for slicing off glass)
Materials required	Cleaner (for cleaning adhering surfaces)

COMPONENTS

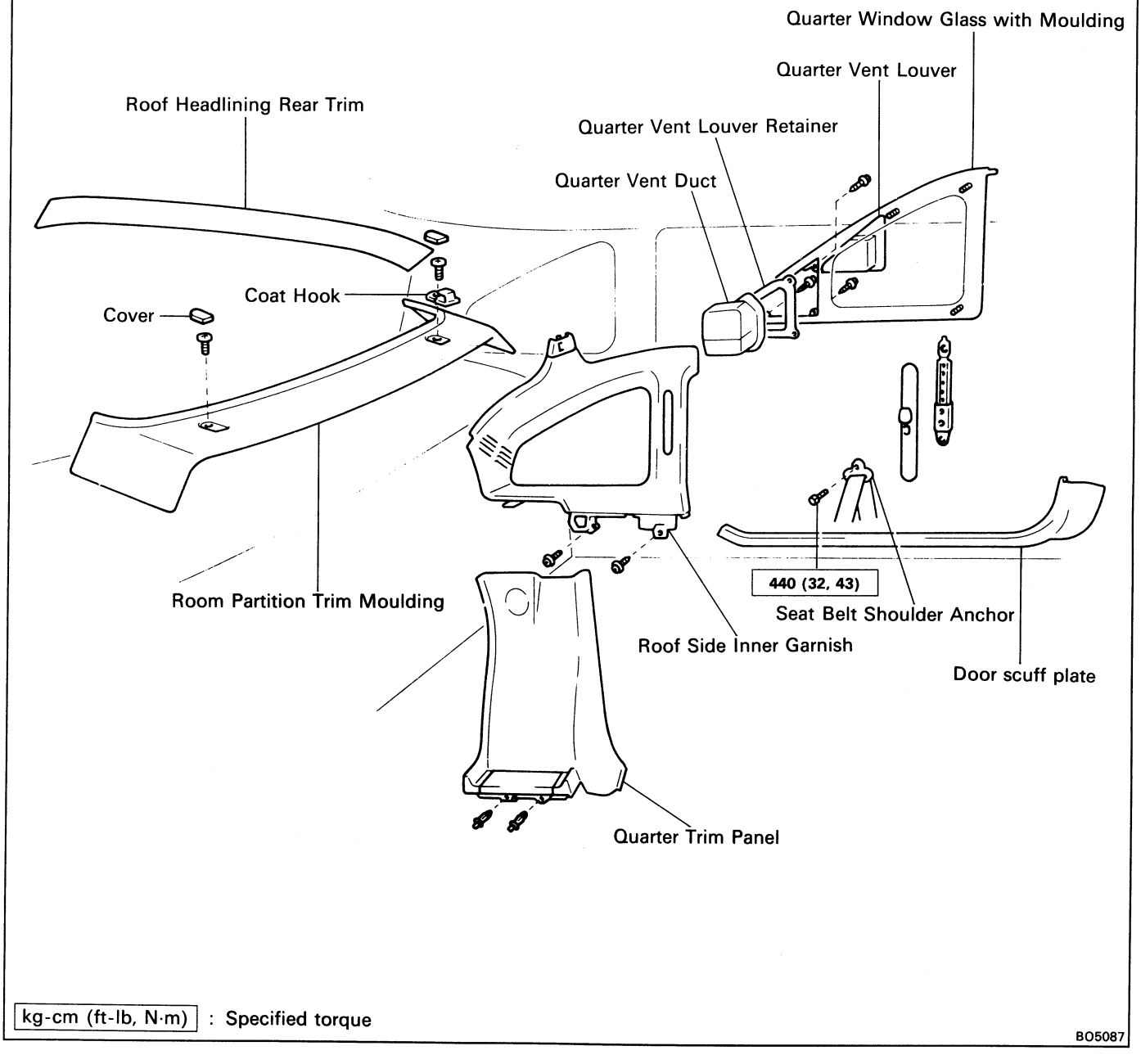

kg-cm (ft-lb, N·m) : Specified torque

BO5087

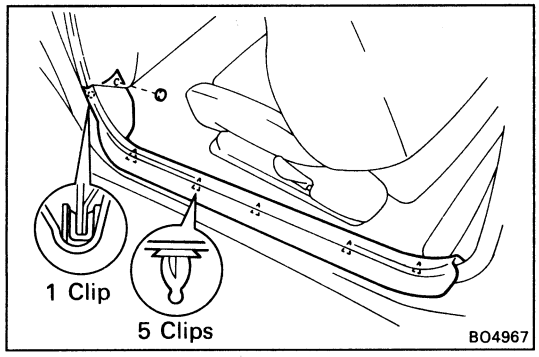

REMOVAL OF QUARTER WINDOW GLASS

1. **REMOVE DOOR SCUFF PLATE**
   (a) Remove the cap.
   (b) Remove the scuff plate by pulling.

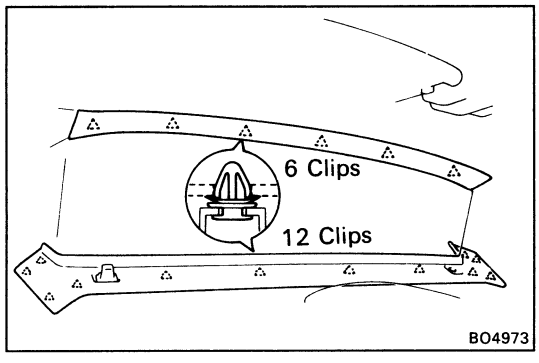

2. **REMOVE ROOF HEADLINING REAR TRIM**
   Remove the trim by pulling.

3. **REMOVE ROOM PARTITION TRIM MOULDING**
   (a) Remove two covers.
   (b) Remove two screws and the hook.
   (c) Remove the moulding by pulling.

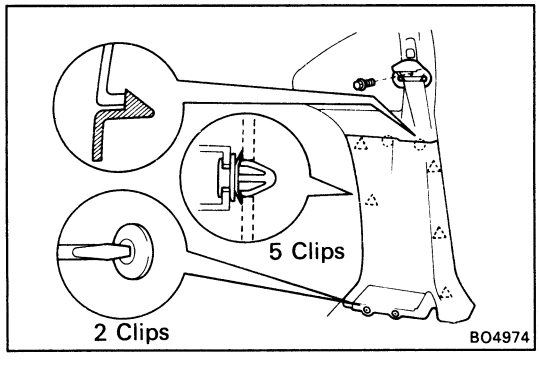

4. **REMOVE QUARTER TRIM PANEL**
   (a) Remove two clips.
   (b) Using the screwdriver, pry loose the clips.
   HINT: Tape the screwdriver tip before use.
   (c) Remove the quarter trim panel by pulling.

5. **REMOVE SEAT BELT SHOULDER ANCHOR**
   Remove the bolt and the shoulder anchor.

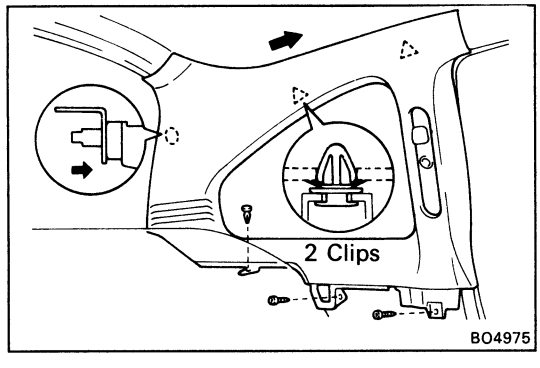

6. **REMOVE ROOF SIDE INNER GRANISH**
   (a) Remove the clip and two screws.
   (b) Using the screwdriver, pry loose the clips.
   HINT: Tape the screwdriver tip before use.
   (c) Pull the garnish forward to remove it.

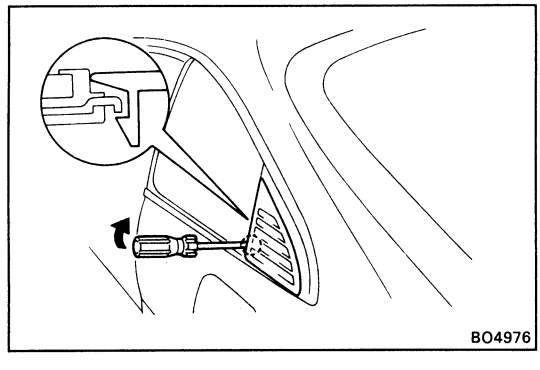

7. **REMOVE QUARTER VENT LOUVER**
   Using the screwdriver, remove the louver.
   HINT: Tape the screwdriver tip before use.

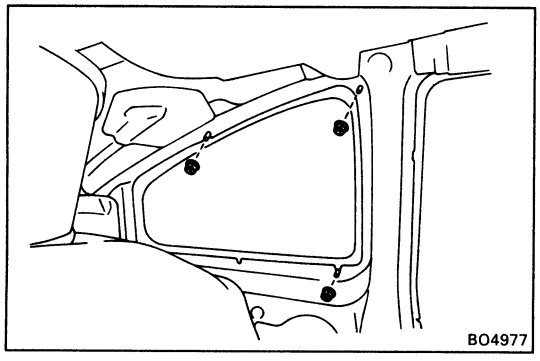

8. **REMOVE QUARTER WINDOW GLASS WITH MOULDING**
   (a) Remove three nuts.

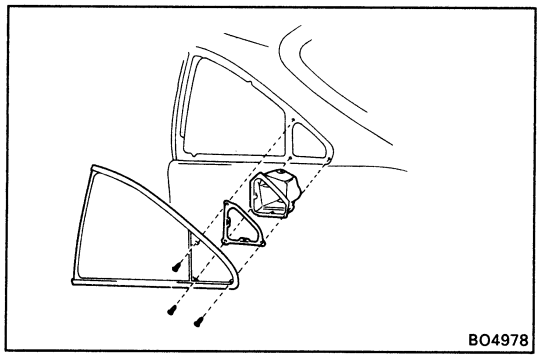

   (b) Remove three screws.
   (c) Using a knife, cut loose the adhesive.
   (d) Remove the glass with moulding.

   NOTICE: Do not damage the body.

9. **REMOVE QUARTER VENT LOUVER RETAINER**

10. **REMOVE QUARTER VENT DUCT**

INSTALLATION OF QUARTER WINDOW GLASS

(See page BO-41)

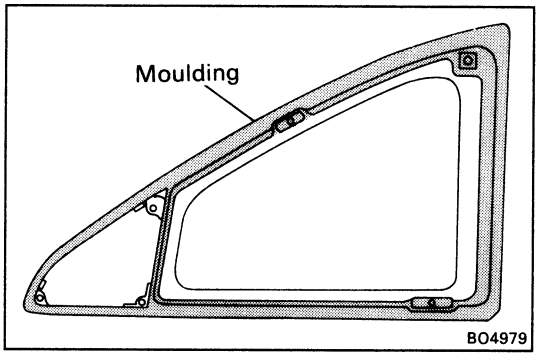

1. **CLEAN BODY OR GLASS**
   Wipe off any adhesive left on the body or moulding with cleaner.

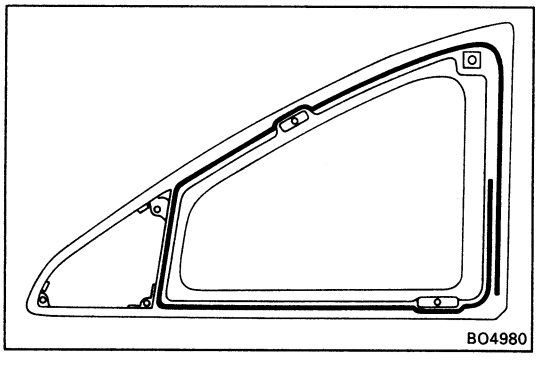

2. **APPLY ADHESIVE AT MOULDING INSTALLATION AREA**

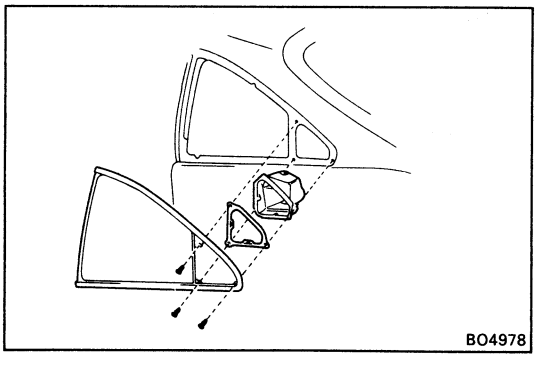

3. **INSTALL QUARTER VENT DUCT**

4. **INSTALL QUARTER VENT LOUVER RETAINER**

5. **INSTALL QUARTER WINDOW GLASS WITH MOULDING**
   (a) Install the glass with moulding to the body.
   (b) Install three screws.

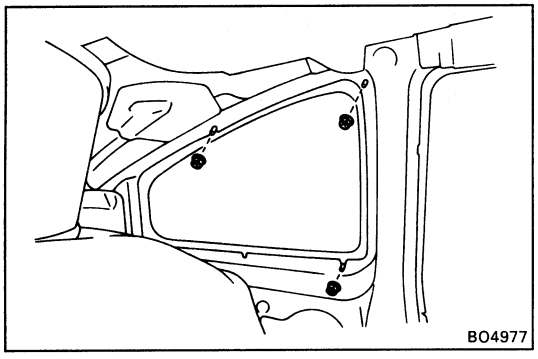

(c) Install three nuts.

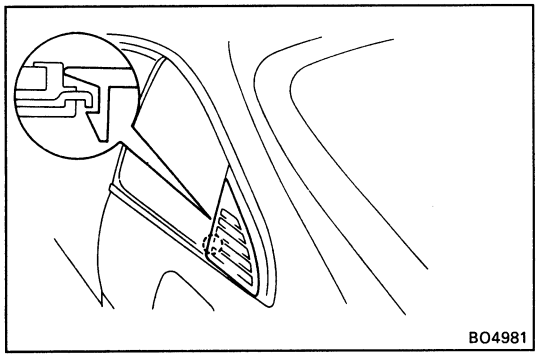

6. INSTALL QUARTER VENT LOUVER

Push in the louver to install it.

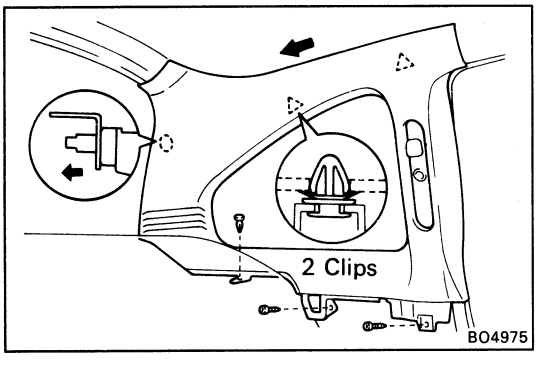

7. INSTALL ROOF SIDE INNER GARNISH

(a) Slide the garnish rearward and tap the granish to install it.

(b) Install two screws and the clip.

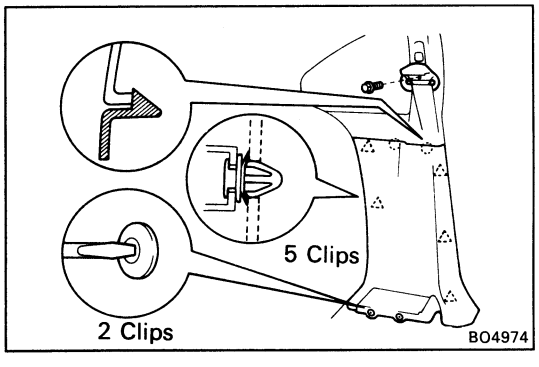

8. INSTALL SEAT BELT SHOULDER ANCHOR

Install the shoulder anchor with the bolt.

Torque: 440 kg-cm (32 fl-lb, 43 N·m)

9. INSTALL QUARTER TRIM PANEL

(a) Tap the panel to install it.

(b) Install two clips.

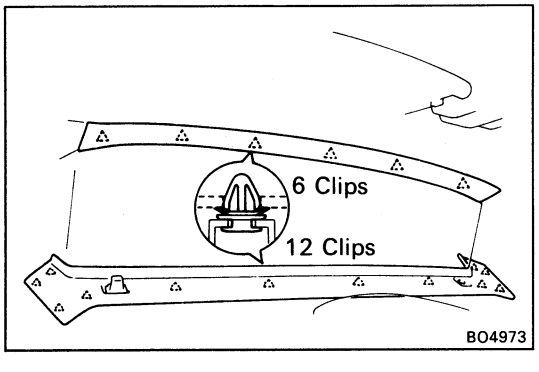

10. INSTALL ROOM PARTITION TRIM MOULDING

11. INSTALL ROOF HEADLINING REAR TRIM

12. INSTALL DOOR SCUFF PLATE

BACK WINDOW GLASS

PREPARE ITEMS LISTED

(See page BO-35)

COMPONENTS

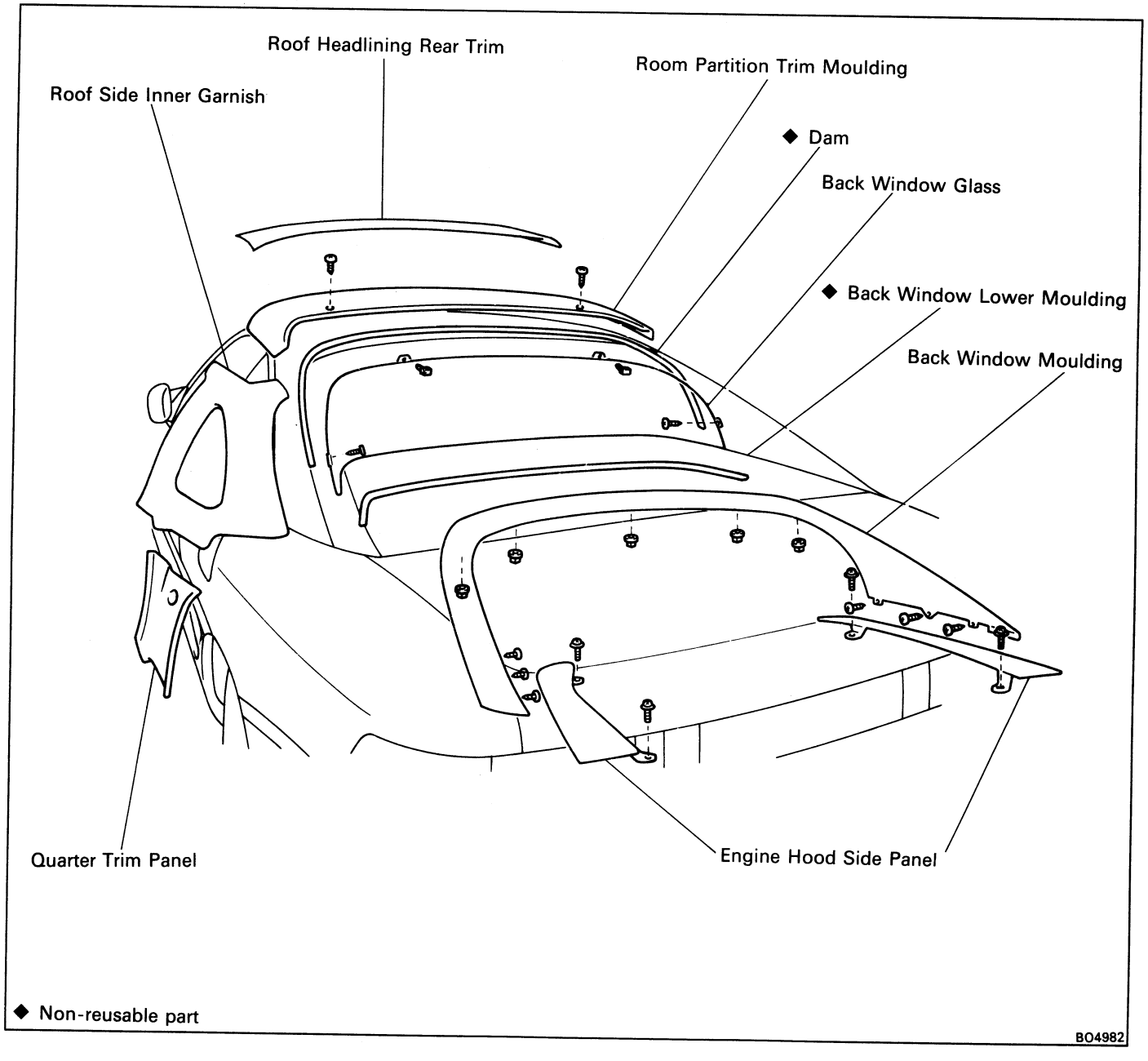

REMOVAL OF BACK WINDOW GLASS

1. REMOVE BACK WINDOW MOULDINGS
   (See step 1 to 3 on pages BO-33 to 34)

2. DISCONNECT DEFOGGER WIRE CONNECTORS

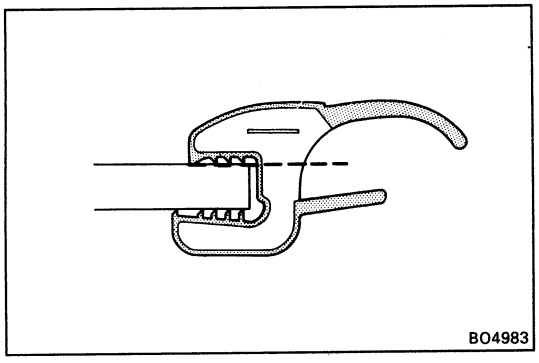

3. **REMOVE BACK WINDOW LOWER MOULDING**

Using the knife, cut off the moulding as shown.

NOTICE: Do not damage the body with the knife.

4. **REMOVE BACK WINDOW GLASS**

(a) Remove two screws.

(b) Remove the glass in the same manner as windshield.
(See step 11 on page BO-38)

INSTALLATION OF BACK WINDOW GLASS

(See page BO-45)

1. **CLEAN AND SHAPE CONTACT SURFACE OF BODY**
(See step 1 on page BO-38)

2. **CLEAN REMOVED GLASS BEFORE INSTALLATION**
(See step 2 on page BO-39)

3. **CLEAN CONTACT SURFACE OF GLASS**
(See step 4 on page BO-39)

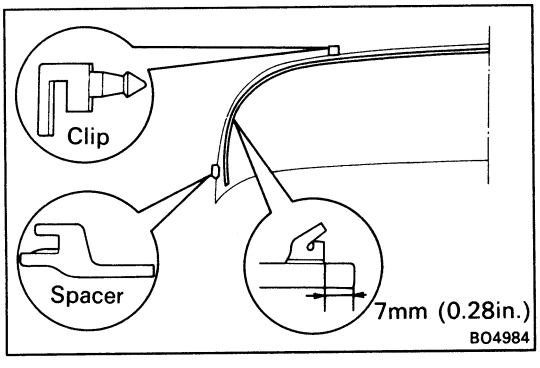

4. **INSTALL SPACER AND CLIP**

Using adhesive, install two spacers and two clips to the glass.

HINT: Fit the spacers and the clips into the cut-out portion in the ceramic.

5. **INSTALL DAM**

Install the dam with double-stick tape as shown in the drawing.

NOTICE: Do not touch the glass face after cleaning it.

6. **COAT CONTACT SURFACE OF BODY WITH PRIMER "M"**
(See step 6 on page BO-39)

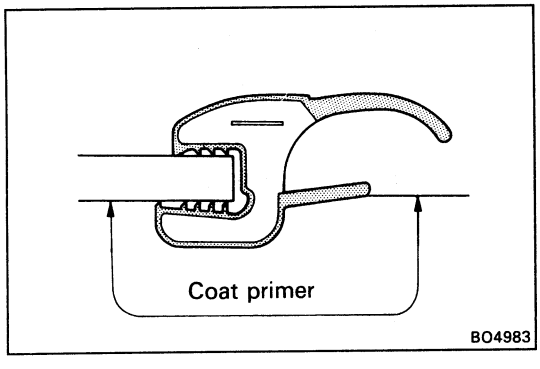

7. **INSTALL BACK WINDOW LOWER MOULDING**

Install the moulding to the glass.

8. **COAT CONTACT SURFACE OF GLASS WITH PRIMER "G"**

(a) Using a brush or sponge, coat the edge of the glass and the contact surface with Primer G.

(b) Before the Primer dries, wipe it off with a clean cloth.

NOTICE: Be sure that installation of the glass is finished within 70 minutes.

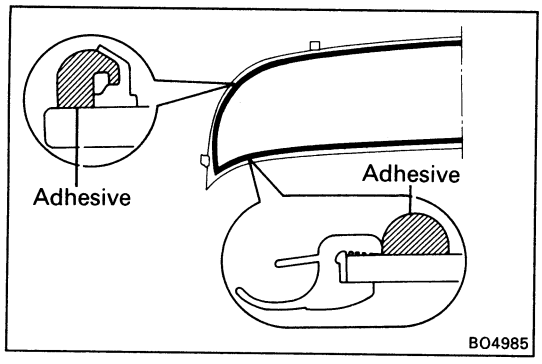

9. **MIX ADHESIVE COATING**
(See page 8 on page BO-39)

10. **APPLY ADHESIVE**

(a) Cut off the tip of the cartridge nozzle to make a hole 5 mm (0.20 in.) in diameter. Fill the cartridge with adhesive.

(b) Load the cartridge into the sealer gun.

(c) Coat the glass with adhesive on all contact surfaces along the ridge.

Adhesive height:
If adhesive remains on body
3.5 – 5.0 mm (0.138 – 0.197 in.)
If no adhesive remains on body
8 – 10 mm (0.31 – 0.39 in.)

11. **INSTALL GLASS WITH LOWER MOULDING**
(See step 10 on page BO-40)

HINT: Align the clips with the body holes, then install two screws.

12. **INSPECT FOR LEAKS AND REPAIR**
(See step 11 on page BO-40)

13. **INSTALL BACK WINDOW MOULDINGS**
(See step 1 to 3 on page BO-34)

14. **CONNECT DEFOGGER WIRE CONNECTORS**

T-BAR ROOF

COMPONENTS

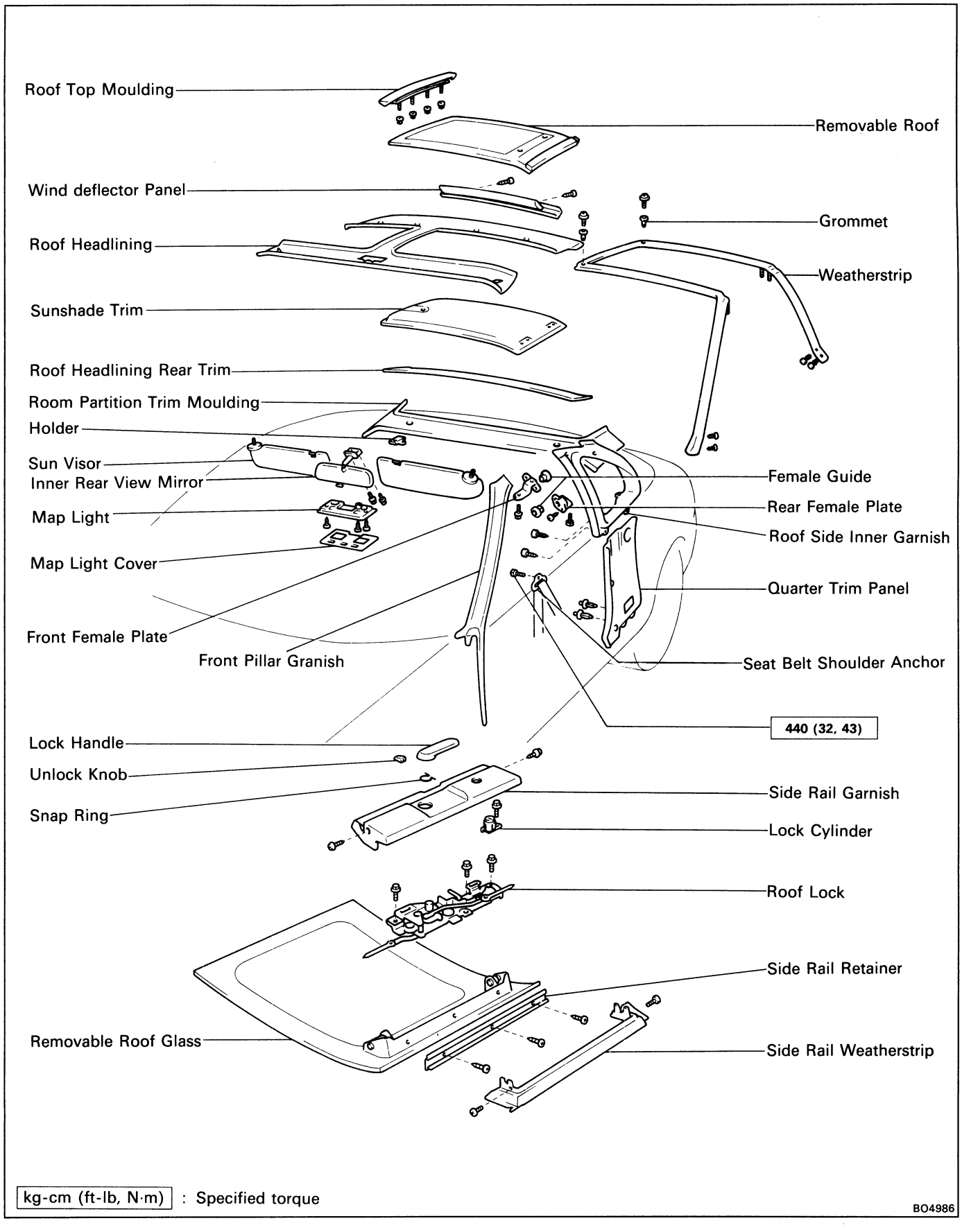

kg-cm (ft-lb, N·m) : Specified torque

BO4986

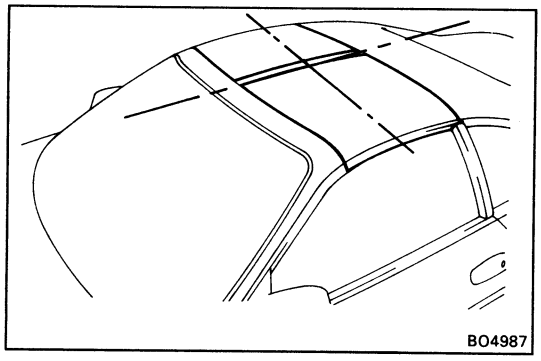

ON VEHICLE INSPECTION

INSPECT REMOVABLE ROOF ALIGNMENT

(a) With the removable roof installed, installed, check for water leakage.

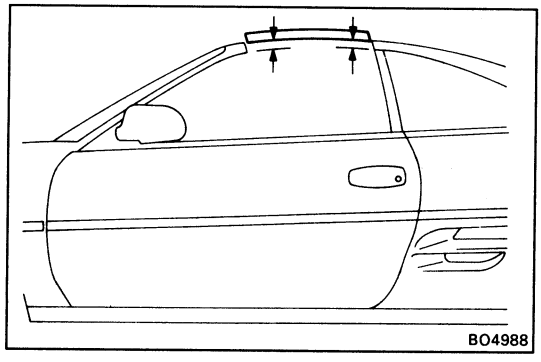

(b) Check for a difference in level between the removable roof glass and the roof panel.

Level: 0 ± 1.4 mm (0 ± 0.055 in.)

ADJUSTMENT OF REMOVABLE ROOF

1. **REMOVE FOLLOWING PARTS:**
(See step 1, 2 and 5 on page BO-52)
   (a) Lock handle and unlock knob
   (b) Side rail garnish
   (c) Lock guide

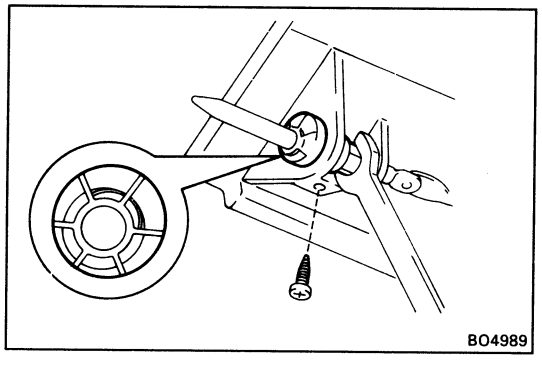

2. **ADJUST REMOVABLE ROOF**

HINT: There are two types of lock guides, one with the hole centered, and the other with its hole 1.5 mm (0.059 in.) off center. Depending on the installation position in whitch the lock guide with the off center hole is installed, the removable roof can be adjusted in four direction.

   (a) With the removable roof installed, turn the lock guide with the spanner in order to adjust the lock guide.
   (b) Install the screw.

3. **INSTALL FOLLOWING PARTS:**
(See steps 6 and 7 on page BO-54)
   (a) Side rail granish
   (b) Lock handle and unlock knob

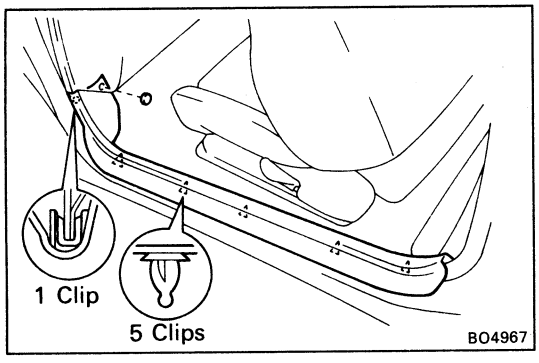

REMOVAL OF T-BAR ROOF

(See page BO-48)

1. REMOVE REMOVABLE ROOF AND SUNSHADE TRIM

2. REMOVE DOOR SCUFF PLATE

(a) Remove the cap.

(b) Remove the scuff plate by pulling.

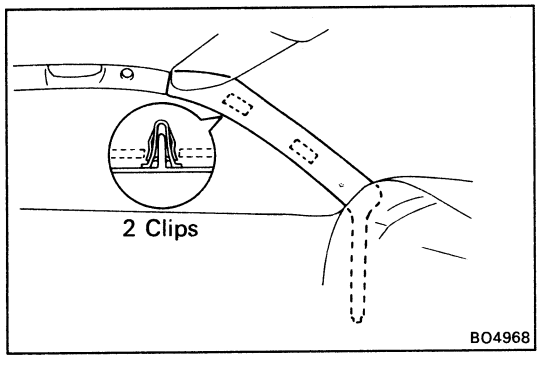

3. REMOVE FRONT PILLAR GARNISH

(a) Remove the clips by your hand.

(b) Pull the garnish rearward to remove it.

4. REMOVE FOLLOWING PARTS:
(See steps 6 to 8 on page BO-37)

(a) Map light cover and map light

(b) Inner rear view mirror

(c) Sun visors and holders

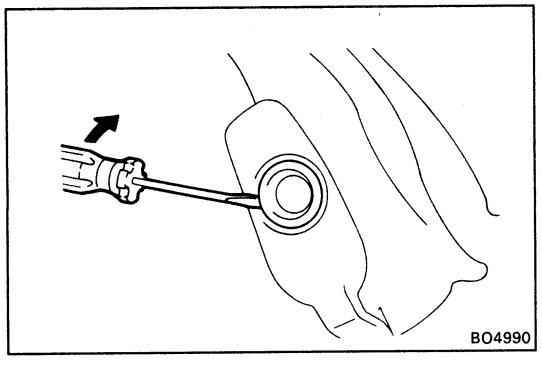

5. REMOVE FEMALE GUIDE

Using the screwdriver, remove the female guide from the rear female plate.

HINT: Tape the screwdriver tip before use.

6. REMOVE FOLLOWING PARTS:
(See steps 2 to 6 on page BO-42)

(a) Roof headlining rear trim

(b) Room partition trim moulding

(c) Quarter trim panel

(d) Seat belt shoulder anchor

(e) Roof side inner garnish

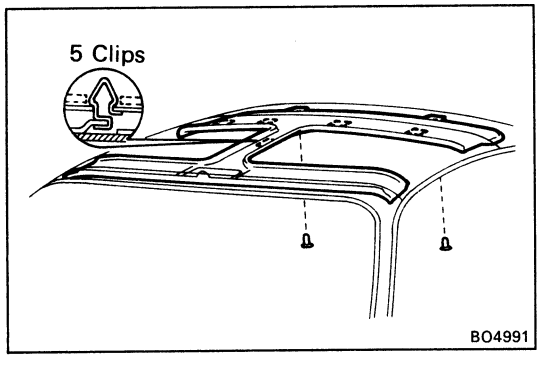

7. REMOVE ROOF HEADLINING

(a) Remove two clips.

(b) Using the screwdriver, pry loose the clips.

HINT: Tape the screwdriver tip before use.

(c) Remove the roof headlining.

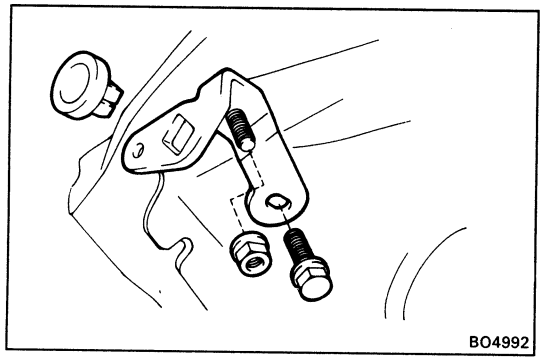

8. REMOVE FRONT FEMALE PLATE

(a) Remove the bolt, the nut and the plate.

(b) Remove the female guide from the plate.

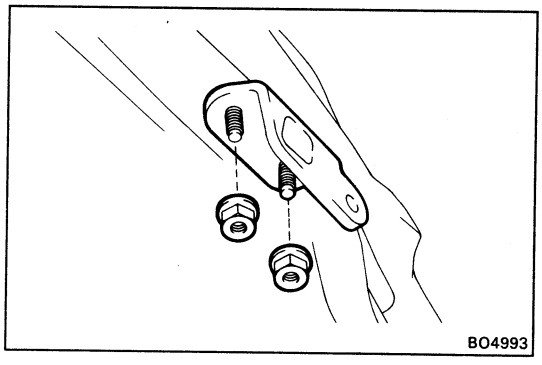

9. REMOVE REAR FEMALE PLATE

Remove two nuts and the plate.

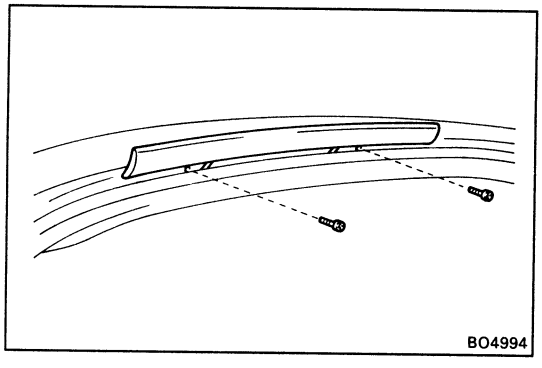

10. REMOVE WIND DEFLECTOR PANEL

Remove two screws and the panel.

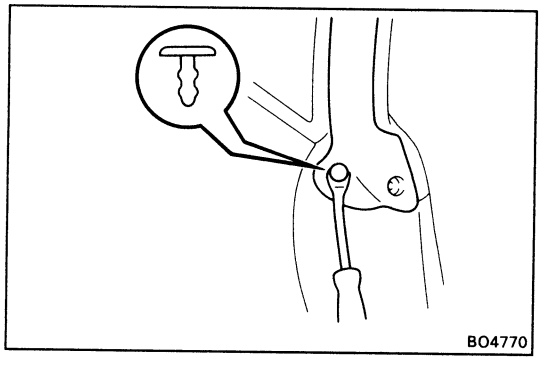

11. REMOVE WEATHERSTRIP

(a) Using the clip remover, remove four clips from the weatherstrip.

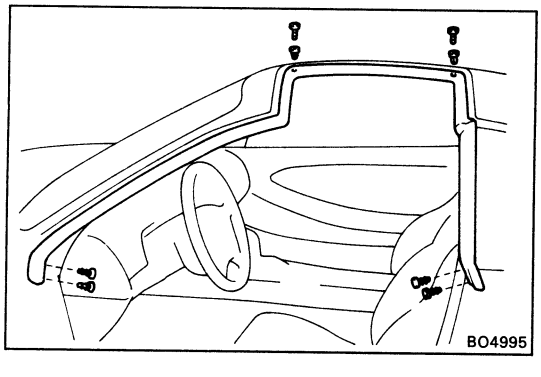

(b) Remove two screws and two grommets from the weatherstrip.

(c) Remove the weatherstrip from the moulding and the retainer.

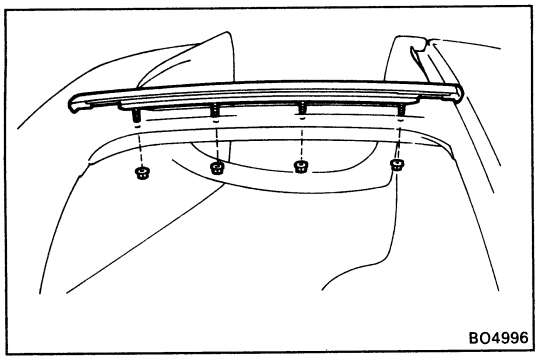

12. REMOVE ROOF TOP MOULDING

Remove four nuts and the top moulding.

DISASSEMBLY OF REMOVABLE ROOF

(See page BO-48)

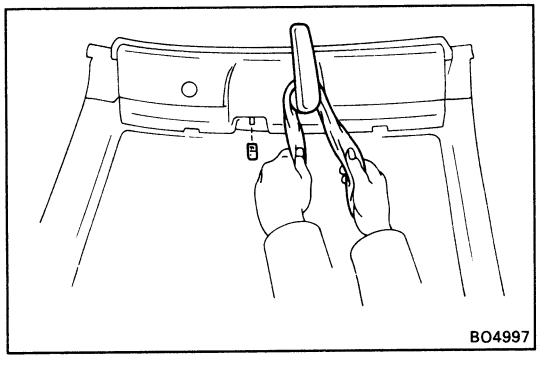

1. REMOVE LOCK HANDLE AND UNLOCK KNOB

(a) Pull off the snap ring with a shop rag and remove the handle.

(b) Remove the knob.

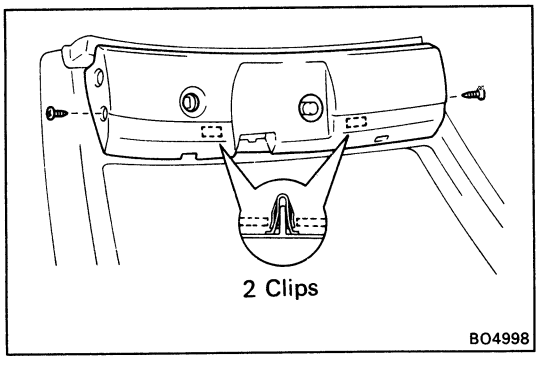

2. REMOVE SIDE RAIL GARNISH

Remove two screws and the garnish.

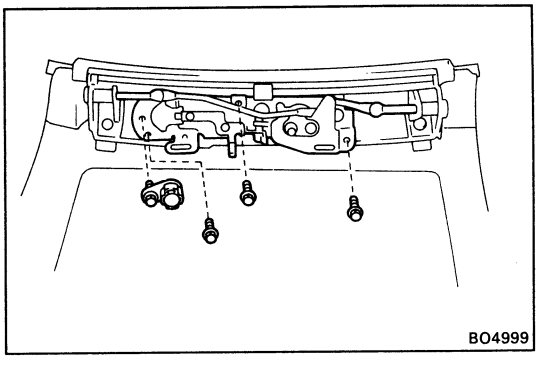

3. REMOVE LOCK CYLINDER

Remove the bolt and the lock cylinder.

4. REMOVE ROOF LOCK

Remove three bolts and the roof lock.

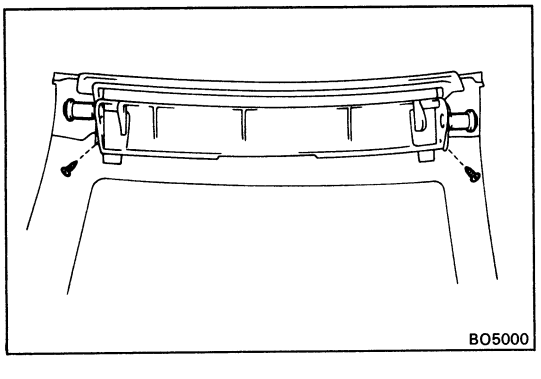

5. REMOVE LOCK GUIDE

(a) Remove the screw.

(b) Pull out the lock guide.

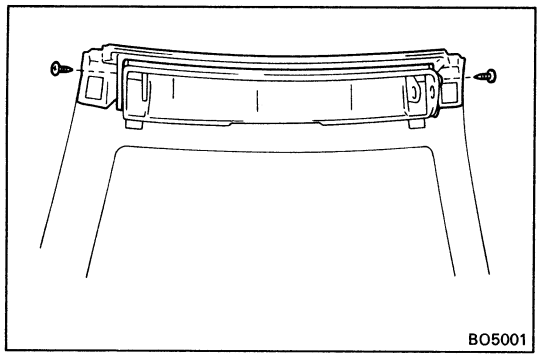

6. **REMOVE SIDE RAIL WEATHERSTRIP**
Remove two screws and the weatherstrip.

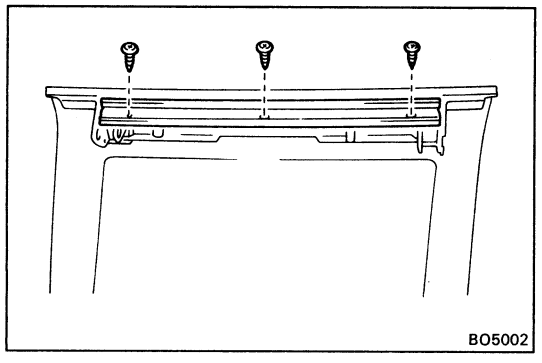

7. **REMOVE SIDE RAIL RETAINER**
Remove three screws and the retainer.

ASSEMBLY OF REMOVABLE ROOF

(See page BO-48)

1. **INSTALL SIDE RAIL RETAINER**
Install the retainer with three screws.

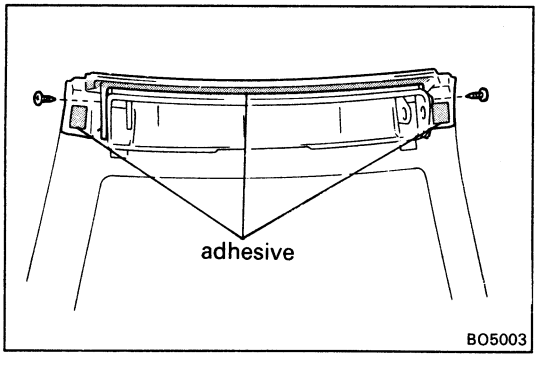

2. **INSTALL SIDE RAIL WEATHERSTRIP**
(a) Apply adhesive to the glass side as shown.
(b) Install the weatherstrip with two screws.

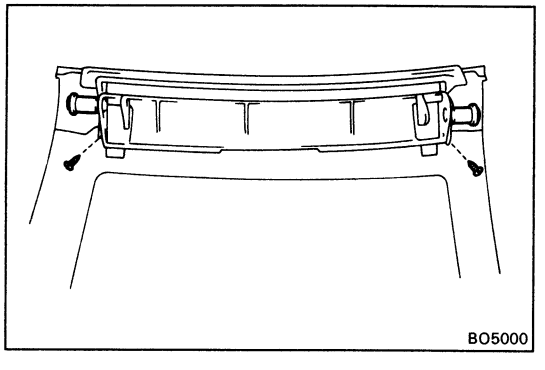

3. **INSTALL LOCK GUIDE**
(a) Insert the lock guide.
(b) Install the screw.

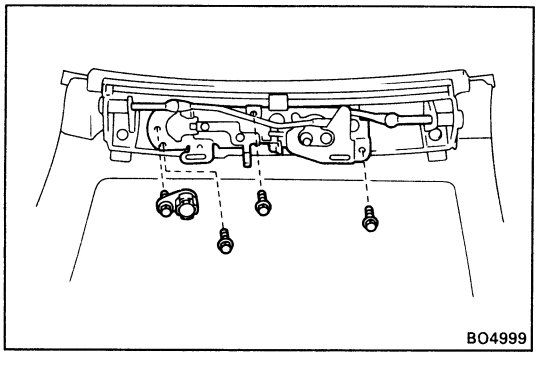

4. **INSTALL ROOF LOCK**
Install the roof lock with three bolts.

5. **INSTALL LOCK CYLINDER**
Install the lock cylinder with the bolt.

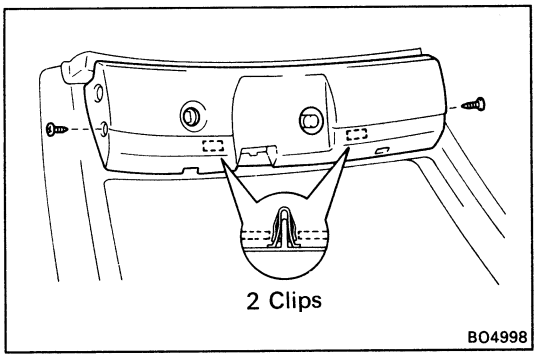

6. **INSTALL SIDE RAIL GARNISH**

Install the garnish with two screws.

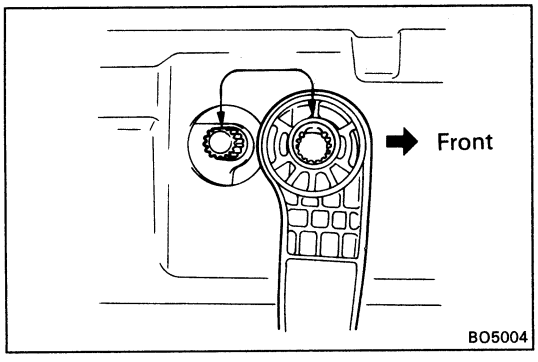

7. **INSTALL LOCK HANDLE AND UNLOCK KNOB**

(a) Install the snap ring to the lever.

(b) Install the handle to the shaft as shown.

(c) Install the knob.

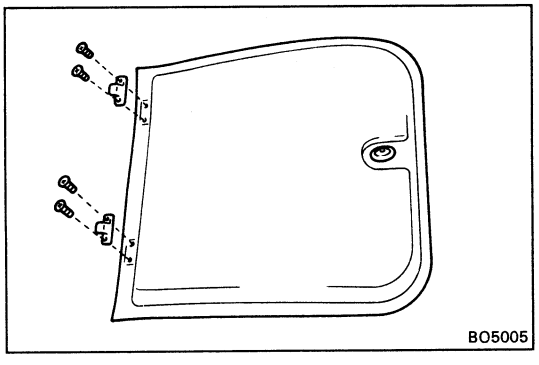

DISASSEMBLY OF SUNSHADE TRIM

(See page BO-48)

REMOVE SUNSHADE TRIM HOLDER

Remove two screws and the holder.

ASSEMBLY OF SUNSHADE TRIM

(See page BO-48)

INSTALL SUNSHADE TRIM HOLDER

Install the holder with two screws.

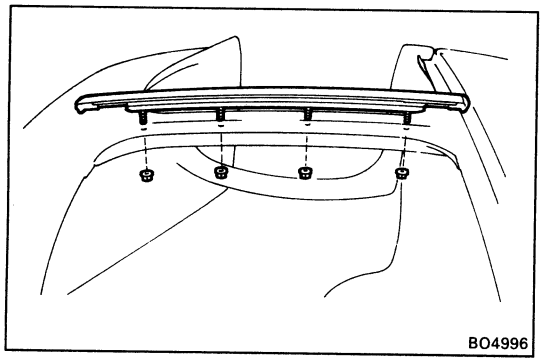

INSTALLATION OF T-BAR ROOF

(See page BO-48)

1. INSTALL ROOF TOP MOULDING

Install the top moulding with four nuts.

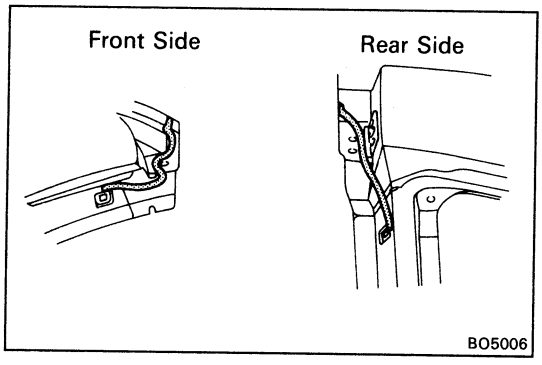

2. INSTALL WEATHERSTRIP

(a) Install the seal to the body

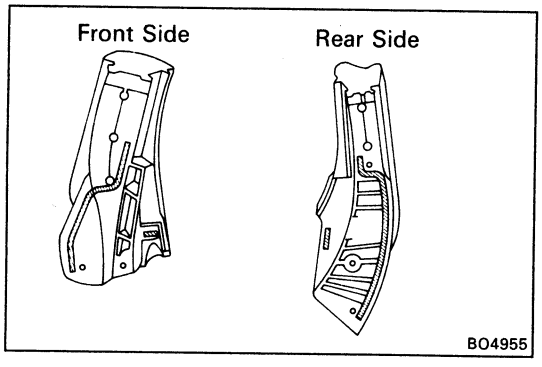

(b) Install the seal to the weatherstrip.

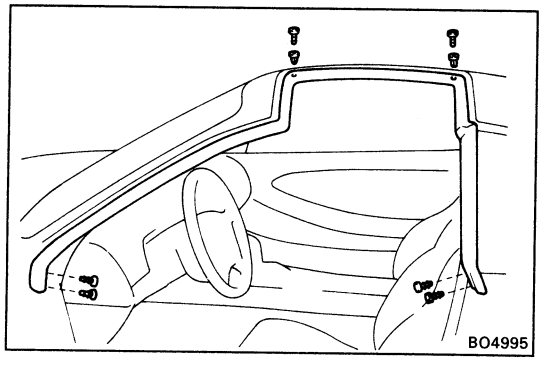

(c) Install the weatherstrip to the moulding and the retainer.

(d) Install two screws and two grommets to the weatherstrip.

(e) Install four clips.

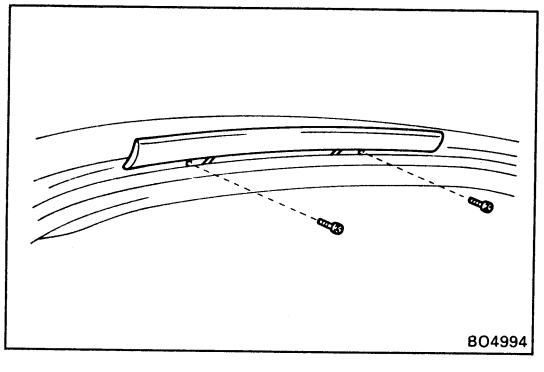

3. INSTALL WIND DEFLECTOR PANEL

Install the panel with two screws.

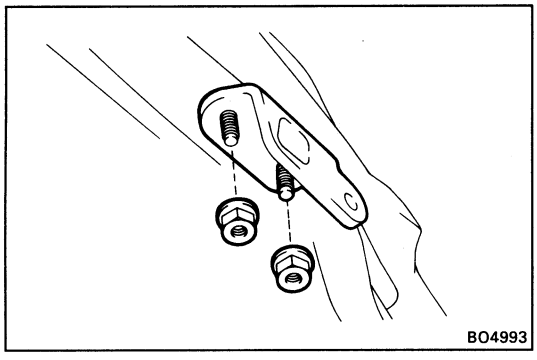
BO4993

4. INSTALL REAR FEMALE PLATE

Install the plate with two nuts.

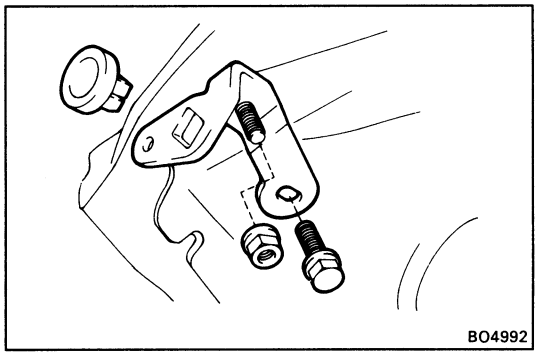
BO4992

5. INSTALL FRONT FEMALE PLATE

(a) Install the female guide to the plate.

(b) Install the plate with the bolt and the nut.

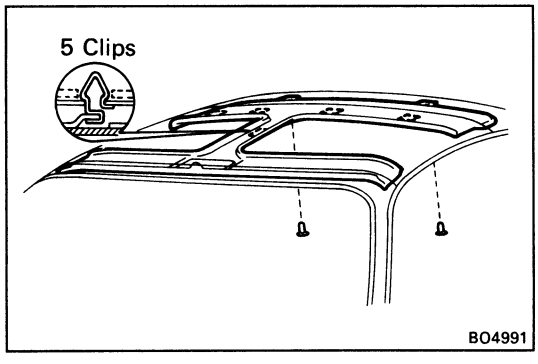

BO4991

6. INSTALL ROOF HEADLINING

(a) Tap the headlining and fix it in place with the clips.

(b) Install two clips.

7. INSTALL FOLLOWING PARTS:

(a) Roof side inner garnish

(b) Seat belt shoulder anchor

Torque: 440 kg-cm (32 ft-lb, 43 N·m)

(c) Quarter trim panel

(d) Room partition trim moulding

(e) Roof headlining rear trim

(f) Sun visors and holders

(g) Inner rear view mirror

(h) Map light and map light cover

(i) Front pillar garnish

(j) Door scuff plate

8. INSTALL FEMALE GUIDE

(a) Install the guide to the rear female plate.

(b) Install the screw.

9. ADJUST REMOVABLE ROOF

(See page BO-49)

10. INSTALL REMOVABLE ROOF AND SUNSHADE TRIM

MOON ROOF

COMPONENTS

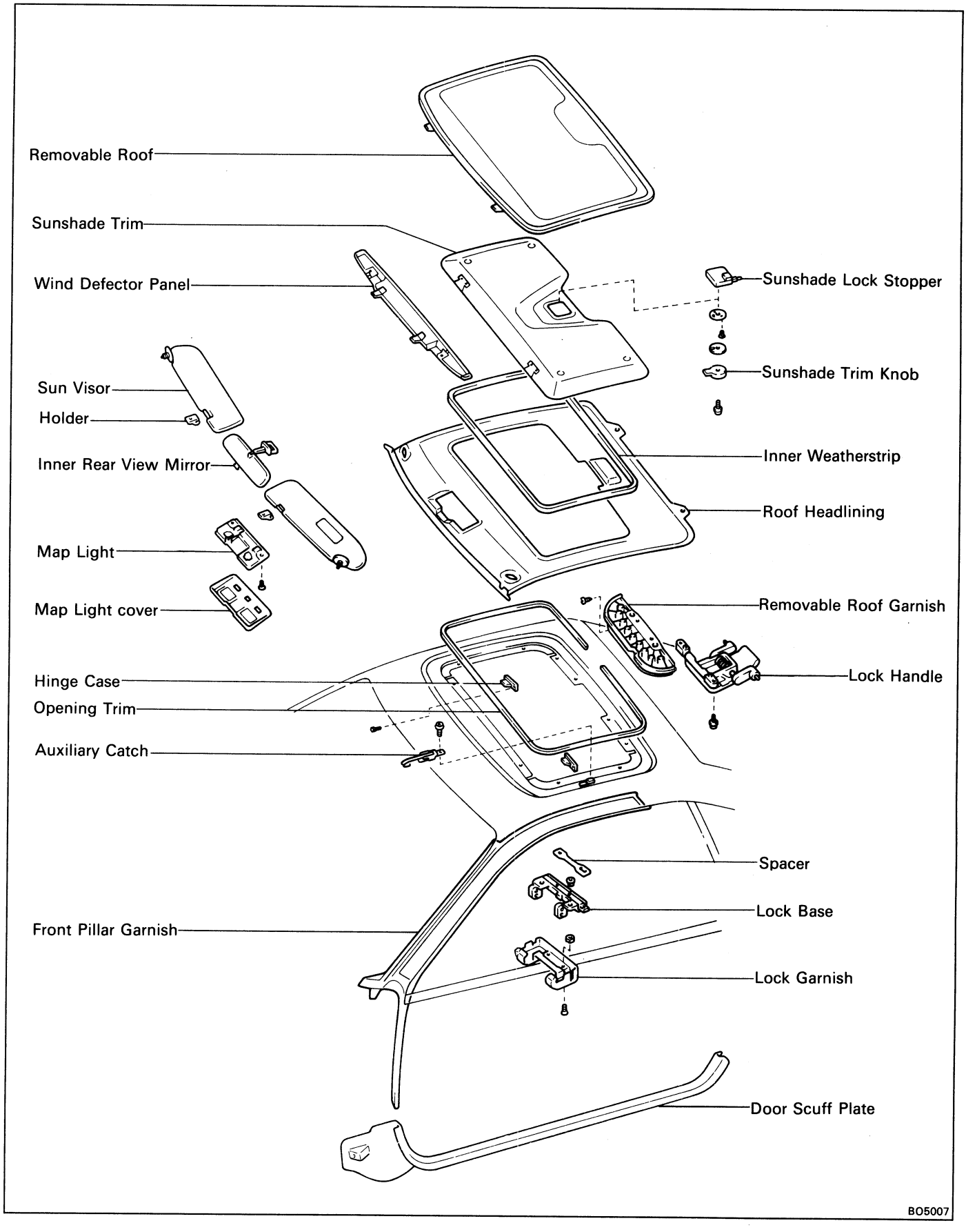

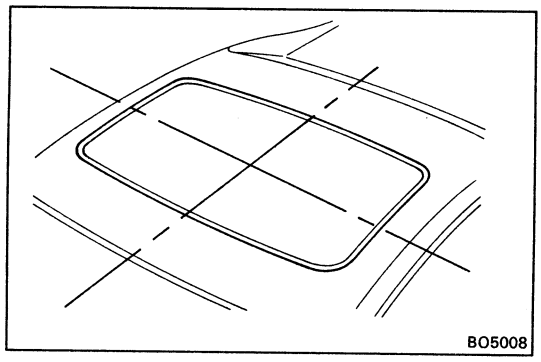

ON-VEHICLE INSPECTION

INSPECT REMOVABLE ROOF ALIGNMENT

(a) With the removable roof installed, check for water leakage.

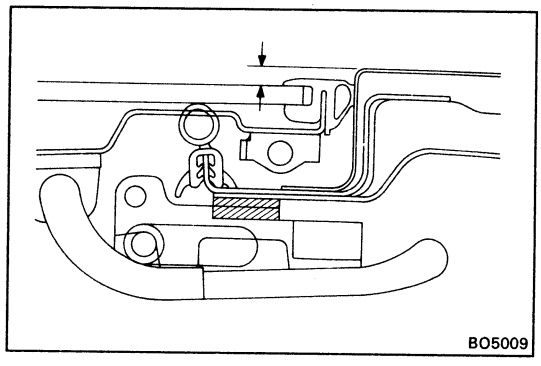

(b) Check for a difference in level between the removal roof and the roof panel.

Rear side: $1.7\ ^{+0}_{-2.5}$ mm ($0.067\ ^{+0}_{-0.098}$ in.)

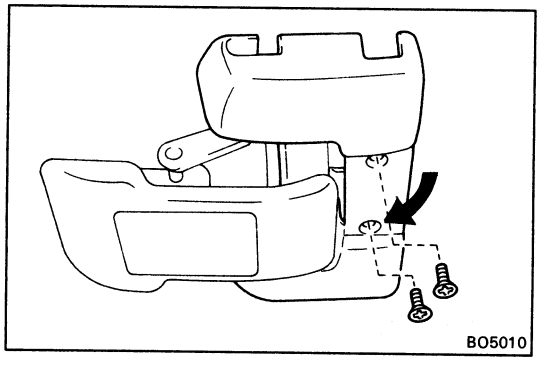

ADJUSTMENT OF REMOVABLE ROOF

1. **REMOVE FOLLOWING PARTS:**
   (See steps 8 to 9 on page BO-60)
   (a) Lock garnish

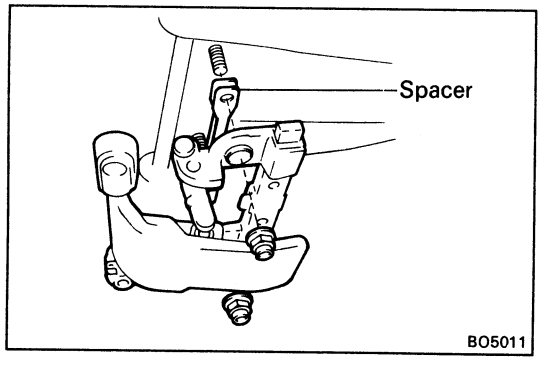

   (b) Lock base

2. **ADJUST REMOVABLE ROOF**
   Adjust by increasing or decreasing the number of spacers.

3. **INSTALL FOLLOWING PARTS:**
   (See steps 4 to 5 on page BO-62)
   (a) Lock base
   (b) Lock garnish

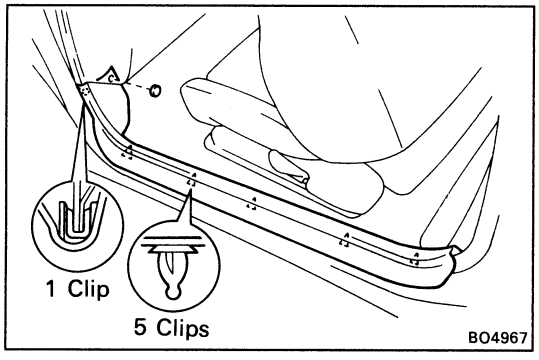

REMOVAL OF MOON ROOF

(See page BO-57)

1. REMOVE SUNSHADE TRIM

2. REMOVE DOOR SCUFF PLATE

(a) Remove the cap.

(b) Remove the scuff plate by pulling.

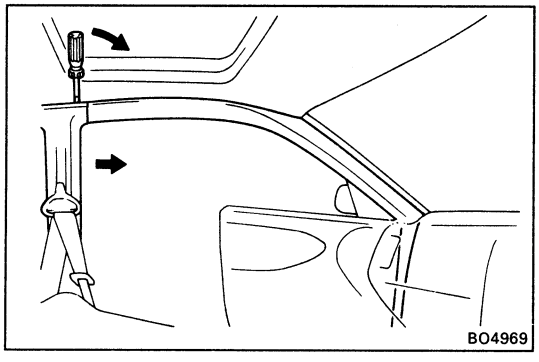

3. REMOVE FRONT PILLAR GARNISH

(a) Pull out the garnish from the roof side inner garnish.

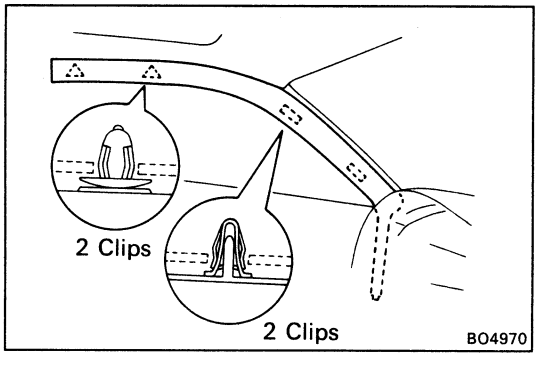

(b) Remove the clips by your hand.

(c) Pull the garnish rearward to remove it.

4. REMOVE FOLLOWING PARTS:
(See steps 6 to 8 on page BO-37)

(a) Map light cover and map light

(b) Inner rear view mirror

(c) Sun visors and holders

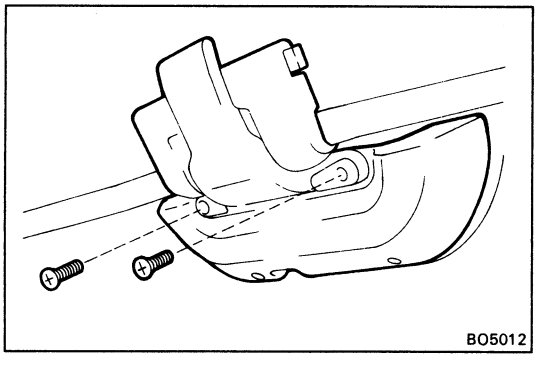

5. REMOVE REMOVABLE ROOF

(a) Remove two screws from the lock handle.

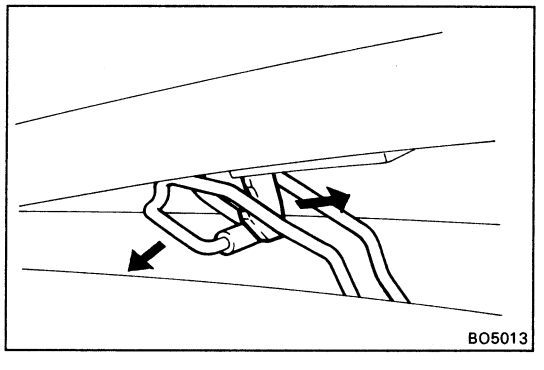

(b) Disconnect the auxiliary catch from the removable roof.

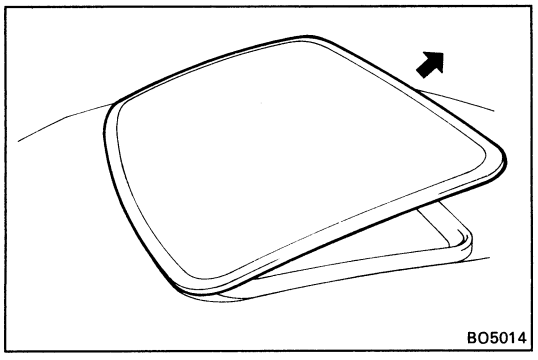

(c) Pull the removable roof rearward to remove it.

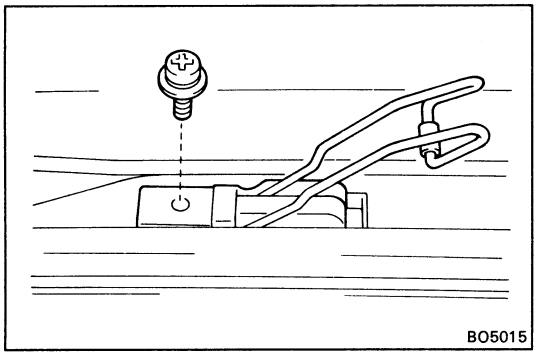

6. REMOVE AUXILIARY CATCH

Remove the screw and the catch.

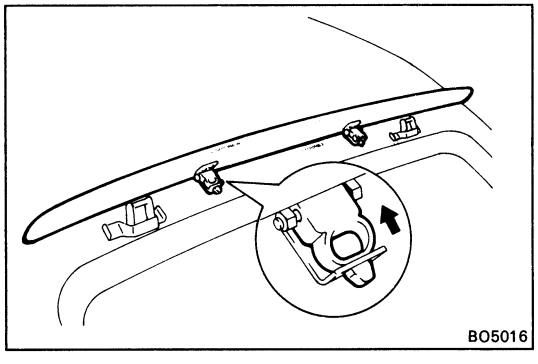

7. REMOVE WIND DEFLECTOR PANEL

Remove two deflector clips, while prying them with the screwdriver.

HINT: Tape the screwdriver tip before use.

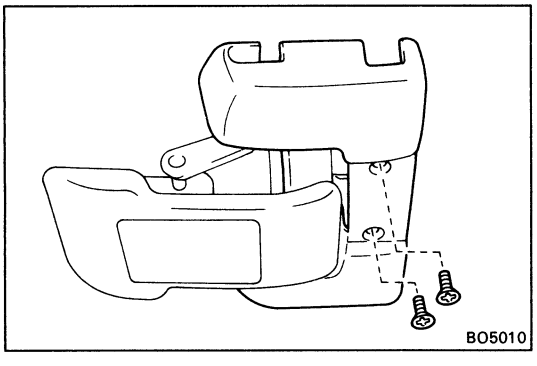

8. REMOVE LOCK GARNISH

Remove two screws and the lock garnish.

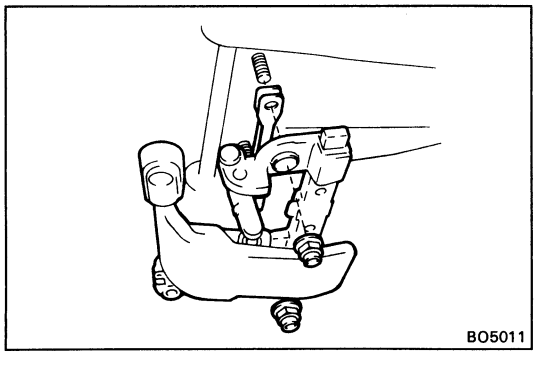

9. REMOVE LOCK BASE

Remove two nuts, the lock base and the spacers.

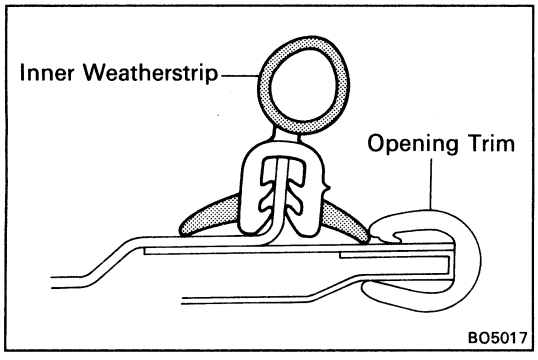

10. REMOVE OPENING TRIM

11. REMOVE INNER WEATHERSTRIP

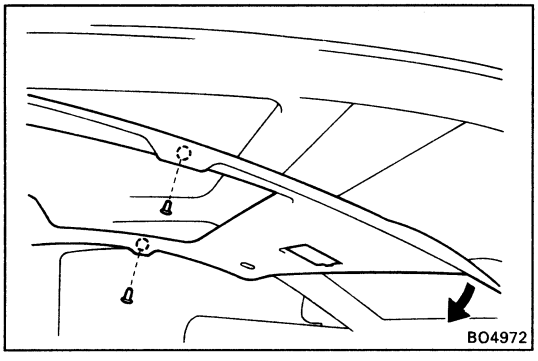

12. REMOVE HINGE CASE

(a) Remove two clips.

(b) Pull down the roof headlining by hand.

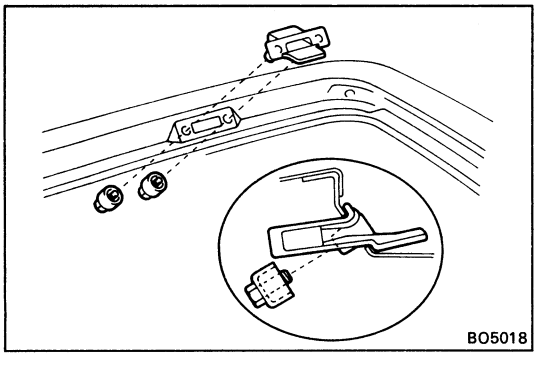

(b) Remove two bolts and the hinge case.

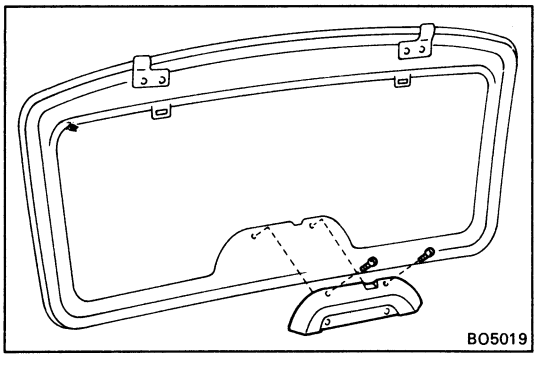

DISASSEMBLY OF REMOVABLE ROOF AND SUNSHADE TRIM

(See page BO-57)

1. REMOVE REMOVABLE ROOF GARNISH

Remove two screws and the garnish.

2. REMOVE SUNSHADE LOCK STOPPER

(a) Remove the screw and the sunshade trim knob.

(b) Remove two screws and the stopper.

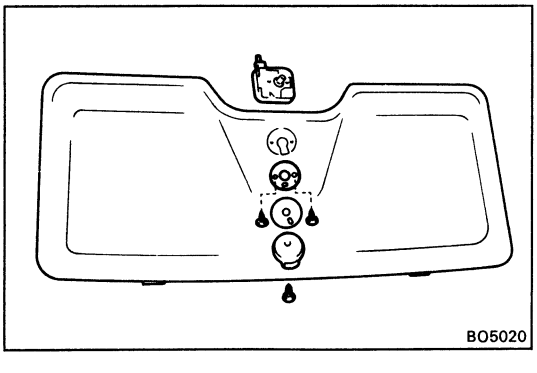

ASSEMBLY OF REMOVABLE ROOF AND SUNSHADE TRIM

(See page BO-57)

1. INSTALL REMOVABLE ROOF GARNISH

Install the garnish with two screws.

2. INSTALL SUNSHADE LOCK STOPPER

(a) Install the lock stopper with two screws.

(b) Install the sunshade trim knob with the screw.

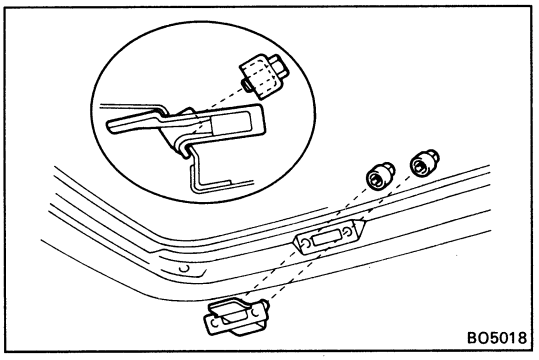

INSTALLATION OF MOON ROOF

(See page BO-57)

1. INSTALL HINGE CASE

Install the hinge case with two bolts.

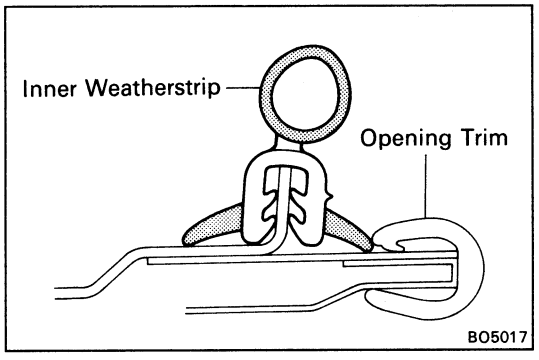

2. INSTALL INNER WEATHERSTRIP

3. INSTALL OPENING TRIM

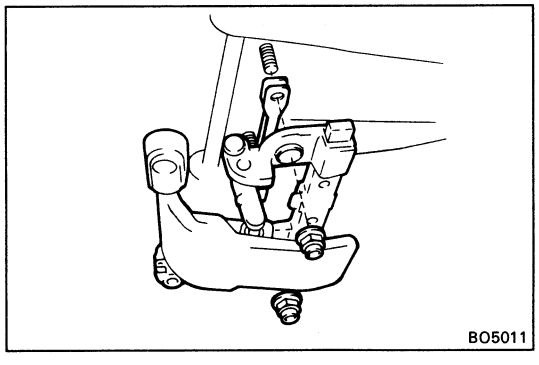

4. INSTALL LOCK BASE

Install the spacers and the lock base with two nuts.

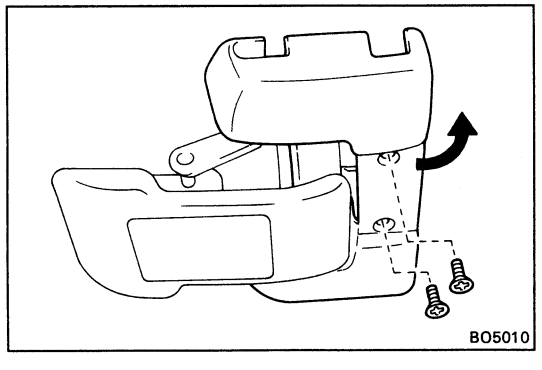

5. INSTALL LOCK GARNISH

Install the garnish with two screws.

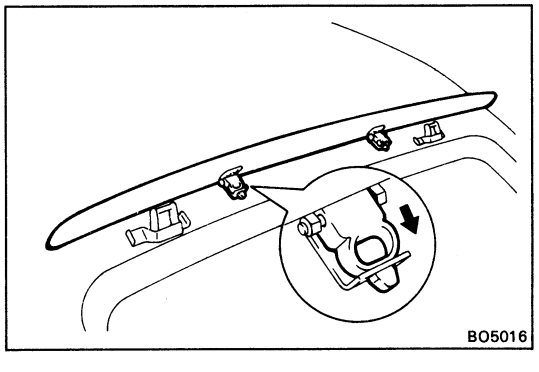

6. INSTALL WIND DEFLECTOR PANEL

Slide the deflector clip rearward and tap the clip to install it.

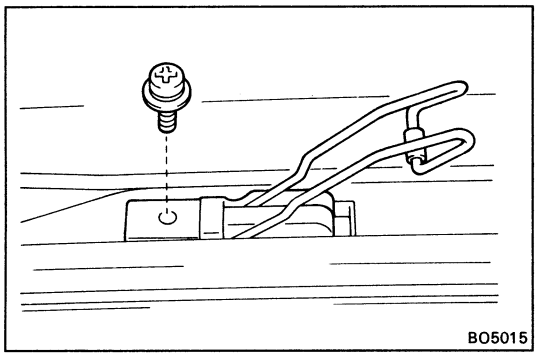

7. INSTALL AUXILIARY CATCH

Install the catch with the screw.

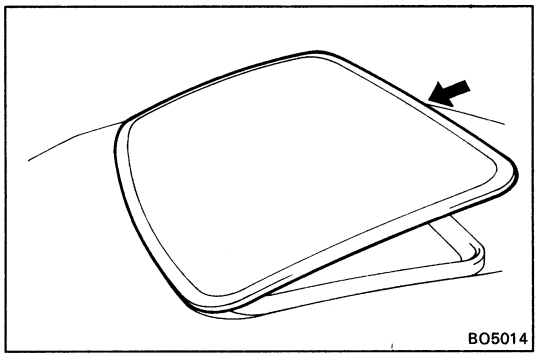

8. INSTALL REMOVABLE ROOF

(a) Place the removable roof onto the roof.

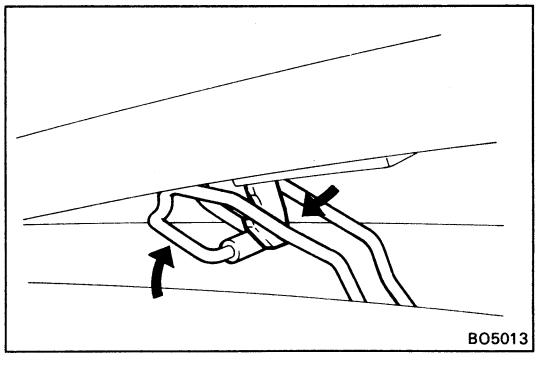

(b) Connect the auxiliary catch to the removable roof.

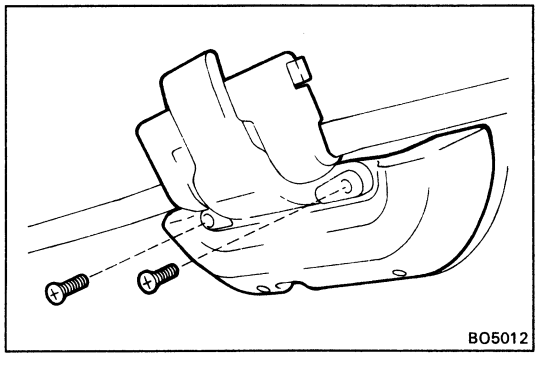

(c) Install two screws to the lock handle.

9. INSTALL FOLLOWING PARTS:

(a) Sun visors and holders
(b) Inner rear view mirror
(c) Map light and map light cover
(d) Front pillar garnish
(e) Door scuff plate

10. ADJUST REMOVABLE ROOF
(See page BO-58)

11. INSTALL SUNSHADE TRIM

INSTRUMENT PANEL

COMPONENTS

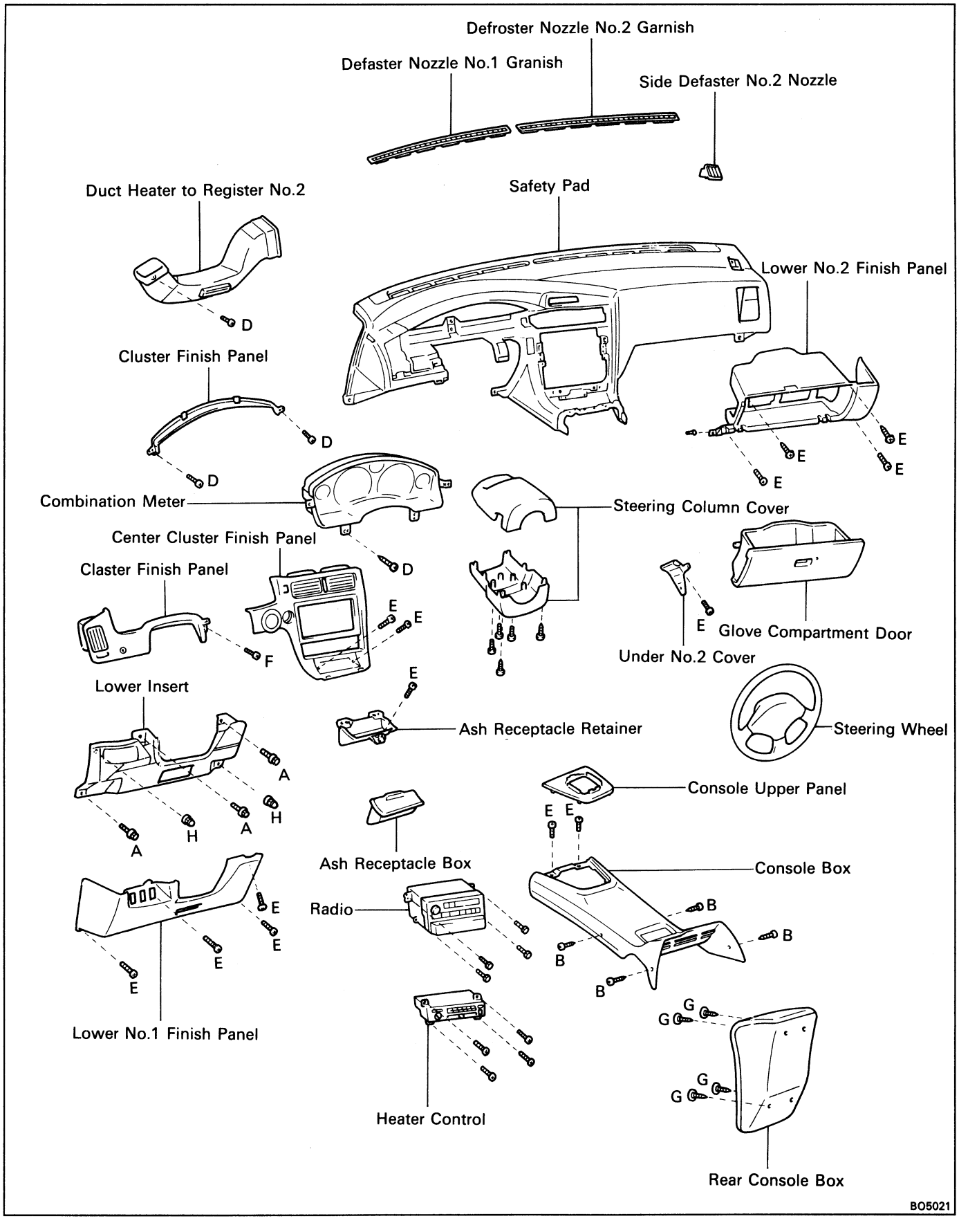

HINT: Screw sizes in the illustration on the previous page are indicated using the code below for removal and installation of instrument panel.

mm (in.)

Code	Shape	Size	Code	Shape	Size	Code	Shape	Size	Code	Shape	Size
A	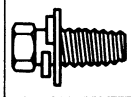	ϕ=6 (0.24) L=20 (0.99)	B	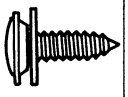	ϕ=5 (0.20) L=18 (0.71)	C		ϕ=5.22 (0.2055) L=14 (0.55)	D	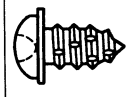	ϕ=5.22 (0.2055) L=16 (0.63)
E		ϕ=5.22 (0.2055) L=16 (0.63)	F		ϕ=5.22 (0.2055) L=20 (0.79)	G	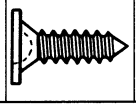	ϕ=5 (0.20) L=18 (0.71)	H	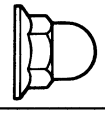	–

BO5088

REMOVAL OF INSTRUMENT PANEL

(See page BO-64)

1. **DISCONNECT BATTERY CABLE FROM NEGATIVE TERMINAL**

2. **REMOVE FOLLOWING PARTS:**
   (See steps 4 to 5 on page BO-37 to 38)
   (a) Door scuff plate
   (b) Front pillar garnish

3. **REMOVE STEERING WHEEL**
   (See page SR-3)

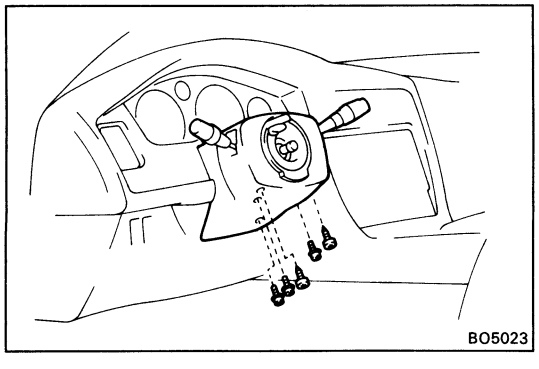

BO5023

4. **REMOVE STEERING COLUMN COVER**
   Remove five screws and the column covers.

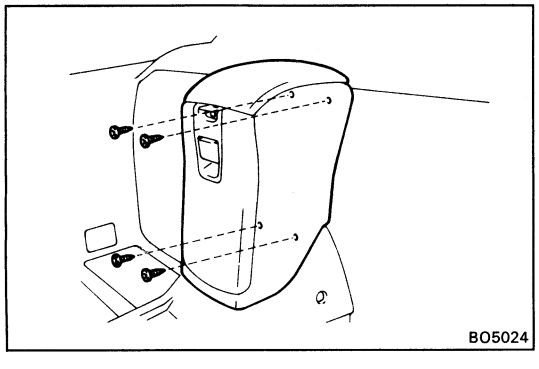

BO5024

5. **REMOVE REAR CONSOLE BOX**
   (a) Open the console box doors.
   (b) Remove four screws and the console box.

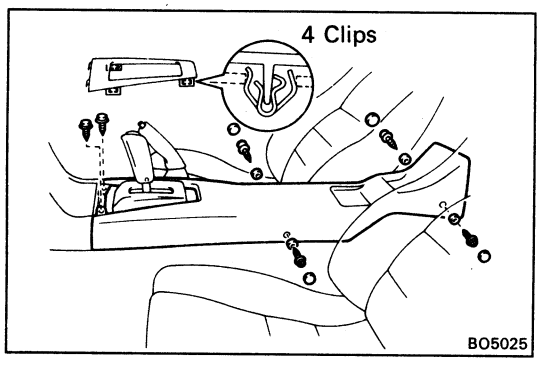

6. REMOVE CONSOLE UPPER PANEL

(a) Using the screwdriver, remove the clip.

HINT: Tape the screwdriver tip before use.

(b) Pull the panel rearward and remove it.

7. REMOVE CONSOLE BOX

(a) Using the screwdriver, remove four screw caps.

HINT: Tape the screwdriver tip before use.

(b) Remove six screws, four bushes and the console box.

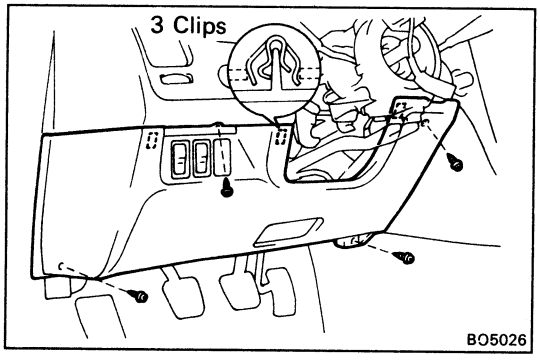

8. REMOVE LOWER NO. 1 FINISH PANEL

(a) Remove four screws.

(b) Remove the panel by pulling then disconncet the connectors.

(c) Remove the lower No. 1 register from the panel.

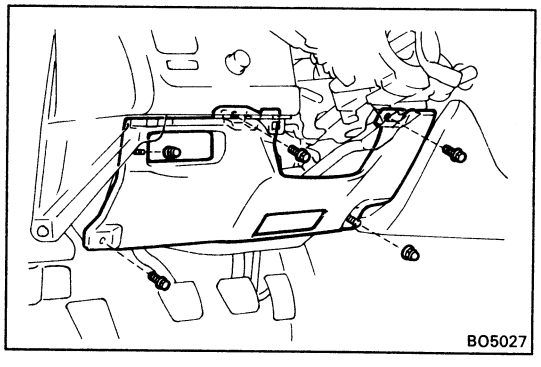

9. REMOVE LOWER INSERT

Remove three bolts, two nuts and the lower insert.

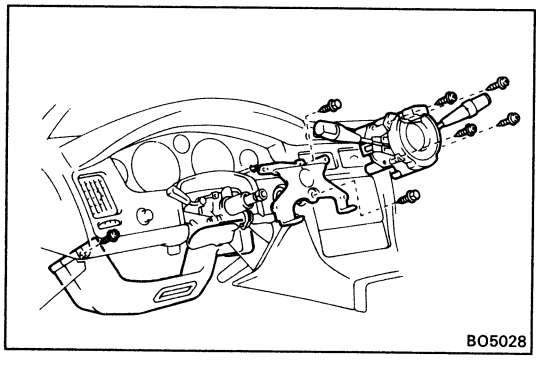

10. REMOVE DUCT HEATER TO REGISTER NO. 2

Remove the screw and the duct.

11. REMOVE COMBINATION SWITCH

(a) Disconnect the connectors.

(b) Remove four screws and the combination switch.

12. REMOVE TURN SIGNAL BRACKET

Remove two bolts and the bracket.

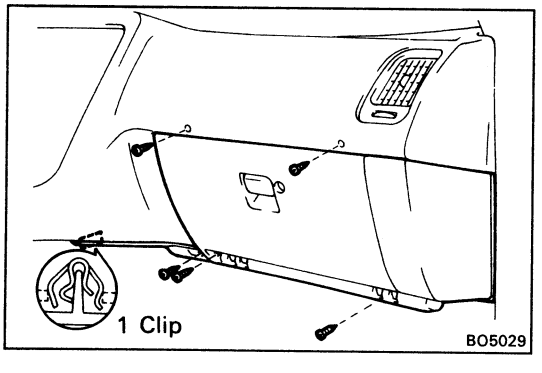

13. REMOVE UNDER NO. 2 COVER

(a) Remove the screw.

(b) Remove the cover by pulling.

14. REMOVE LOWER NO. 2 FINISH PANEL

Remove four screws and the panel.

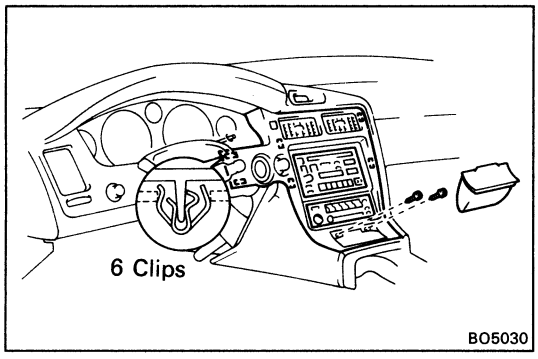

15. REMOVE CENTER CLUSTER FINISH PANEL

(a) Remove the ash receplacle box by pulling.

(b) Remove two screws.

(c) Using the screwdriver, remove the panel and disconnect the connector.

HINT: Tape the screwdriver tip before use.

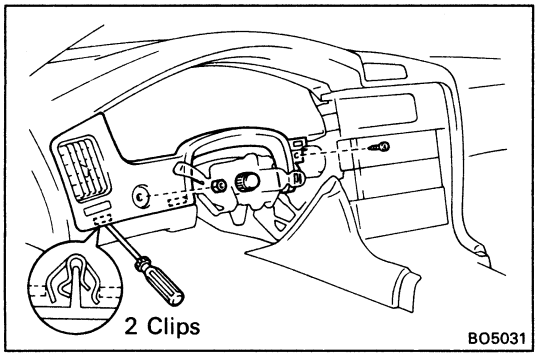

16. REMOVE CLUSTER FINISH PANEL

(a) Remove the rheostat knob by pulling.

(b) Remove the nut from the rheostat.

(c) Remove the screw.

(d) Using the screwdriver, remove the panel and disconnect the connector.

HINT: Tape the screwdriver tip before use.

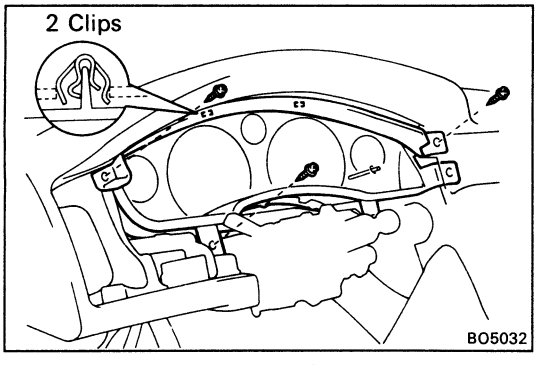

17. REMOVE CLUSTER FINISH PANEL

(a) Remove two screws.

(b) Using the screwdriver, remove the panel.

HINT: Tape the screwdriver tip before use.

18. REMOVE COMBINATION METER

(a) Remove the screw.

(b) Disconnect the connectors and the meter bracket.

(c) Remove the meter.

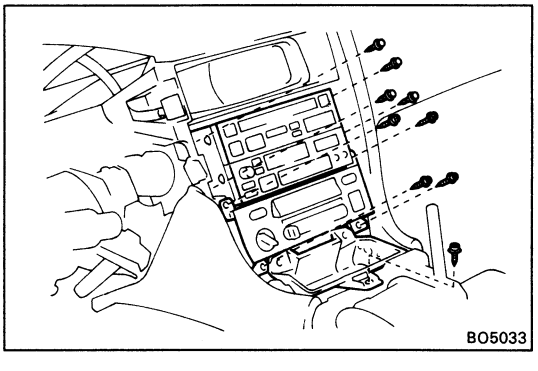

19. REMOVE RADIO

Remove four bolts and the radio.

20. REMOVE HEATER CONTROL

Remove four screws and hang the heater control.

21. REMOVE ASH RECEPTACLE RETAINER

Remove the screw and the retainer.

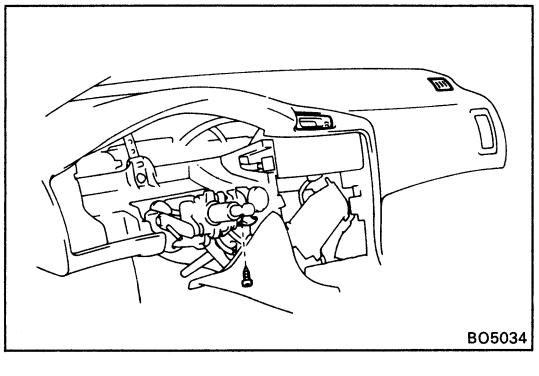

22. REMOVE CLOCK

(a) Using the screwdriver, remove the clock ornament.

HINT: Tape the screwdriver tip before use.

(b) Disconnect the connector and remove the clock.

23. REMOVE SIDE DEFROSTER NO. 2 NOZZLE

24. REMOVE BRACKET

Remove the screw and the bracket from the safety pad.

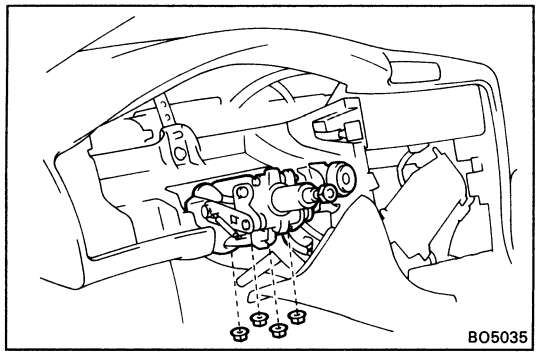

25. DISCONNECT STEERING COLUMN

(a) Remove four nuts.

(b) Disconnect the steering column from the reinforcement.

26. REMOVE SAFETY PAD

Remove five bolts, five screws, the nut and the safety pad.

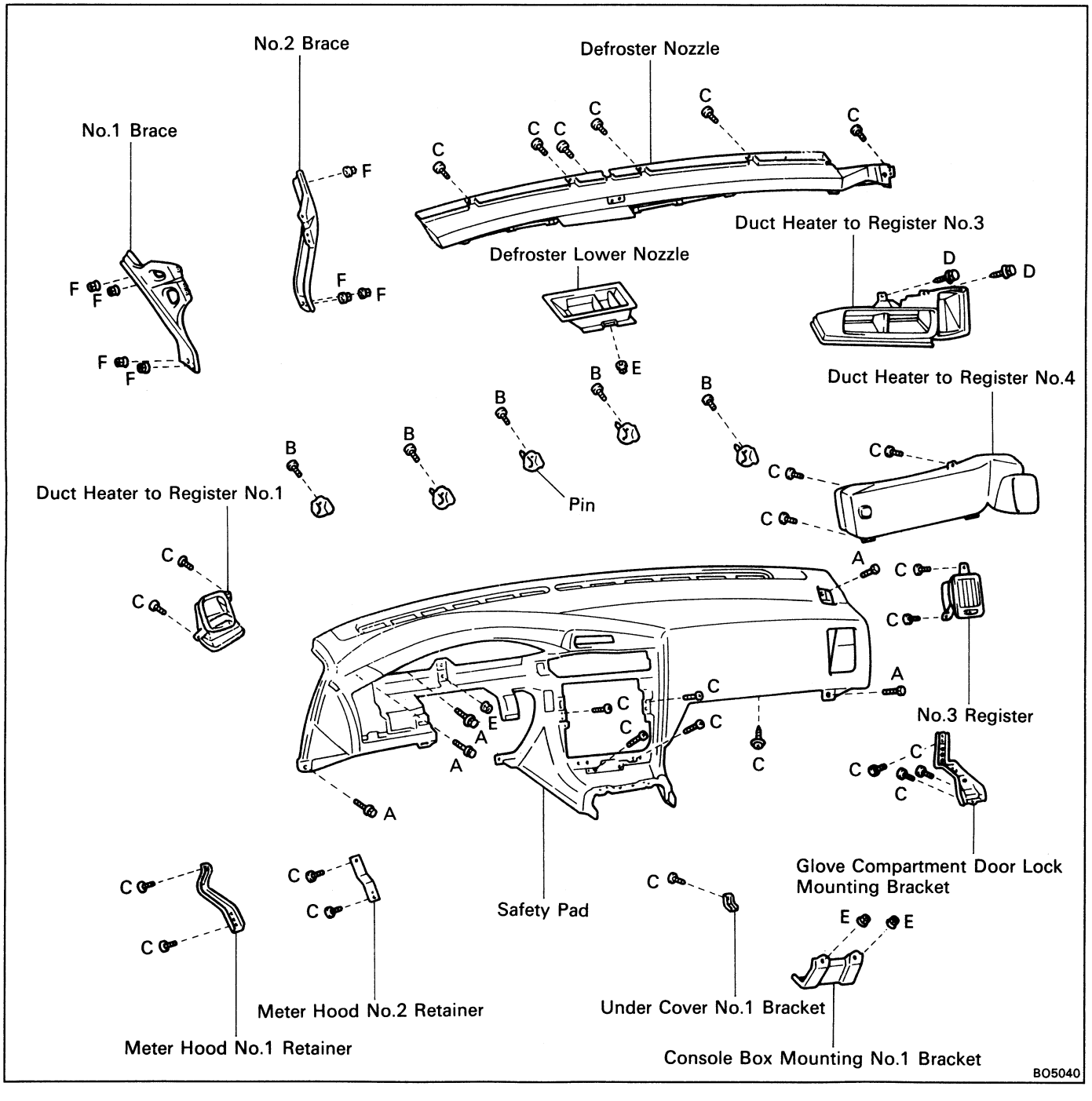

HINT: Screw sizes in the illustration on the previous page are indicated using the code below for removal and installation of instrument panel.

mm (in.)

Code	Shape	Size	Code	Shape	Size	Code	Shape	Size
A	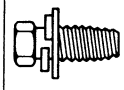	ϕ=6 (0.24) L=20 (0.79)	B	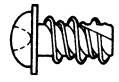	ϕ=4.5 (0.177) L=12 (0.47)	C	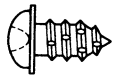	ϕ=5.22 (0.2055) L=16 (0.63)
D	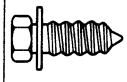	ϕ=6 (0.24) L=14 (0.55)	E	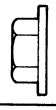	–			–

BO5036

27. REMOVE FOLLOWING PARTS FROM SAFETY PAD

- Defroster nozzle
- Defroster nozzle No. 1 garnish
- Defroster nozzle No. 2 garnish
- Meter hood No. 1 retainer
- Meter hood No. 2 retainer
- Glove compartment door lock mounting bracket
- Duct heater to register No. 1
- Duct heater to register No. 4
- No.3 register
- Under cover No. 1 bracket
- Pin

28. REMOVE FOLLOWING PARTS:

- Defroster lower nozzle
- Duct heater to register No. 3
- No. 1 brace
- No. 2 brace
- Console box mounting No. 1 bracket

INSTALLATION OF INSTRUMENT PANEL

(See page BO-68 and 64)

INSTALL INSTRUMENT PANEL PARTS BY FOLLOWING REMOVAL SEQUENCE IN REVERSE

SEAT

COMPONENTS

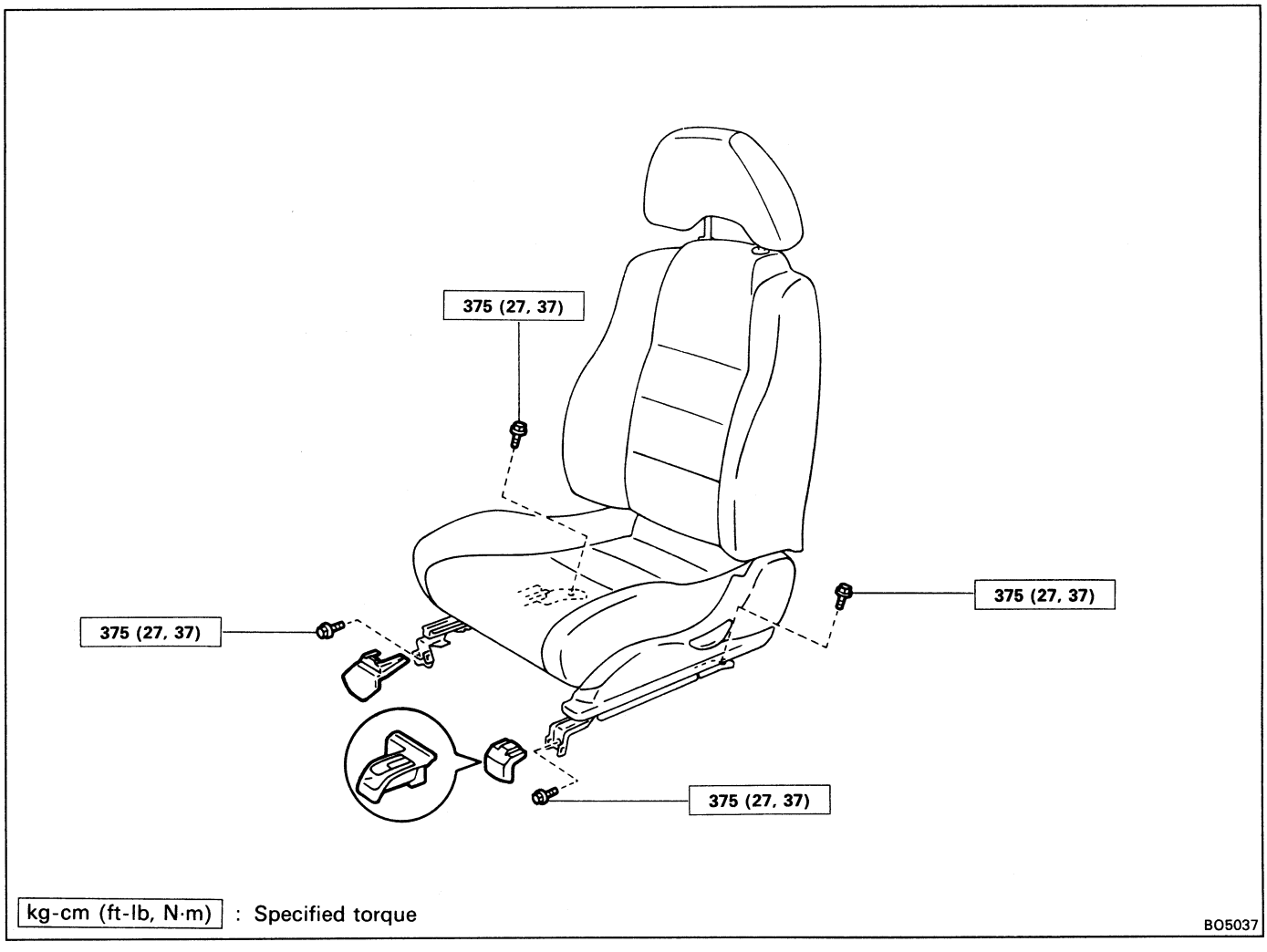

kg-cm (ft-lb, N·m) : Specified torque

BO5037

SEAT BELTS

COMPONENTS

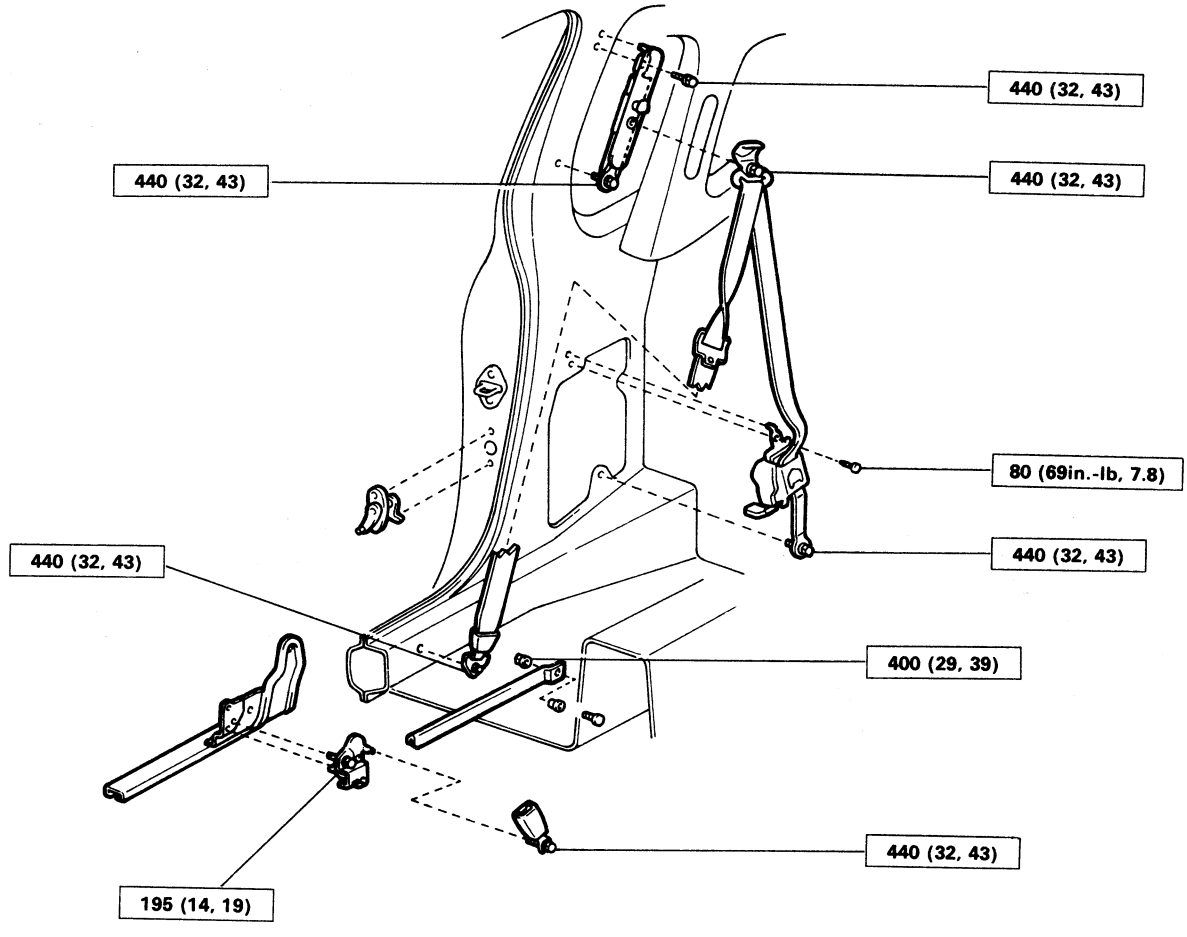

kg-cm (ft-lb, N·m) : Specified torque

BO5089

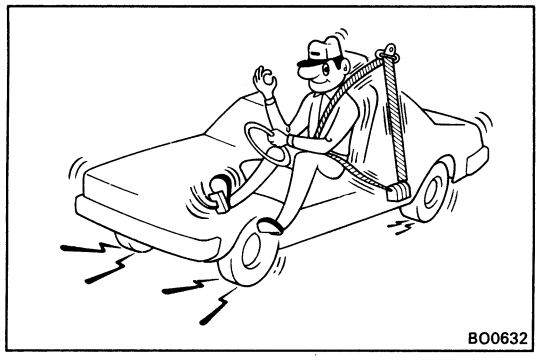

SEAT BELTS

[Emergency Locking Retractor (ELR) Type]

1. RUNNING TEST (IN SAFE AREA)

(a) Fasten the front seat belt.

(b) Drive the car at 10 mph (16 km/h) and make a very hard stop.

(c) Check that the belt is locked and cannot be extended at this time.

HINT: Conduct this test in a safe area. If the belt does not lock, remove the belt mechanism assembly and conduct the following static check. Also, whenever installing a new belt assembly, verify the proper operation before installation.

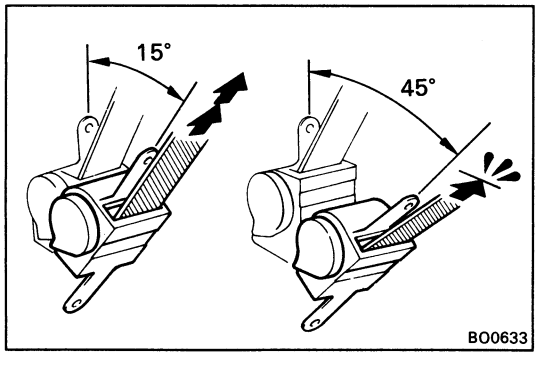

2. STATIC TEST

(a) Remove the locking retractor assembly.

(b) Tilt the retractor slowly.

(c) Verify that the belt can be pulled out at a tilt of 15 degrees or less, and cannot be pulled out at over 45 degrees of tilt.

If a problem is found, replace the assembly.

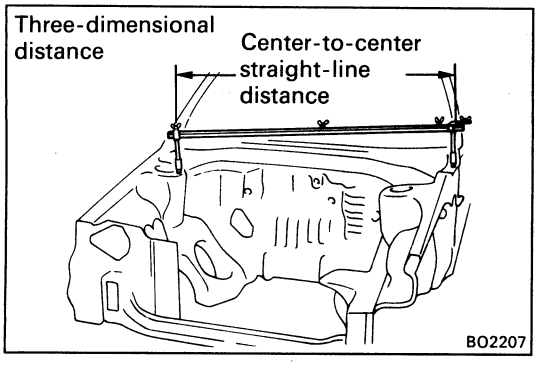

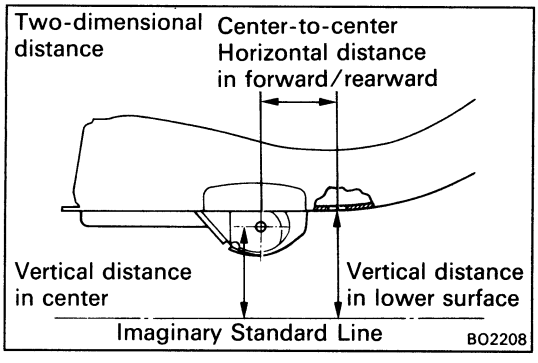

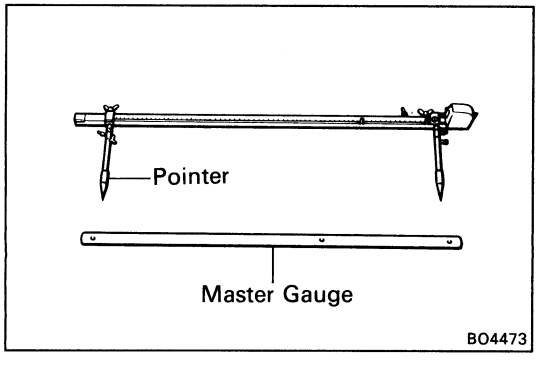

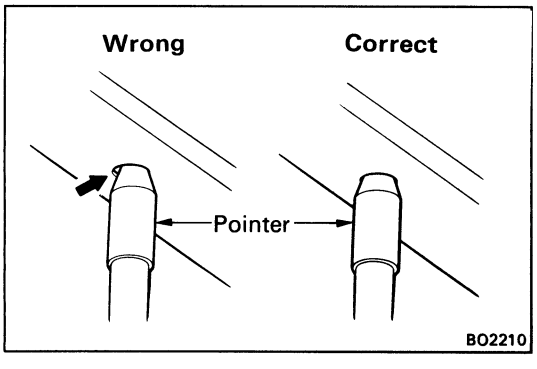

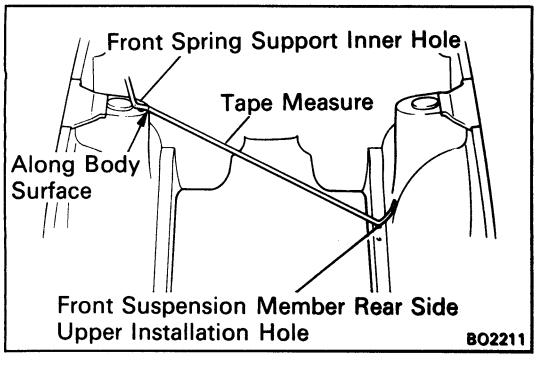

BODY DIMENSIONS

General Information

1. BASIC DIMENSIONS

(a) There are two types of dimensions in the diagram.

(Three-dimensional distance)

- Straight-line distance between the centers of two measuring points.

(Two-dimensional distance)

- Horizontal distance in forward/rearward between the centers of two measuring points.
- The height from an imaginary standard line.

(b) In cases in which only one dimension is given, left and right are symmetrical.

(c) The dimensions in the following drawing indicate actual distance. Therefore, please use the dimensions as a reference.

2. MEASURING

(a) Basically, all measurements are to be done with a tracking gauge. For portions where it is not possible to use a tracking gauge, a tape measure should be used.

(b) Use only a tracking gauge that has no looseness in the body, measuring plate, or pointers.

HINT:

1. The height of the left and right pointers must be equal.
2. Always calibrate the tracking gauge before measuring or after adjusting the pointer height.
3. Take care not to drop the tracking gauge or otherwise shock it.
4. Confirm that the pointers are securely in the holes.

(c) When using a tape measure, avoid twists and bends in the tape.

(d) When tracking a diagonal measurement from the front spring support inner hole to the suspension member upper rear installation hole, measure along the front spring support panel surface.

Body Dimensions

FRONT LUGGAGE COMPARTMENT

(Three-Dimensional Distance)

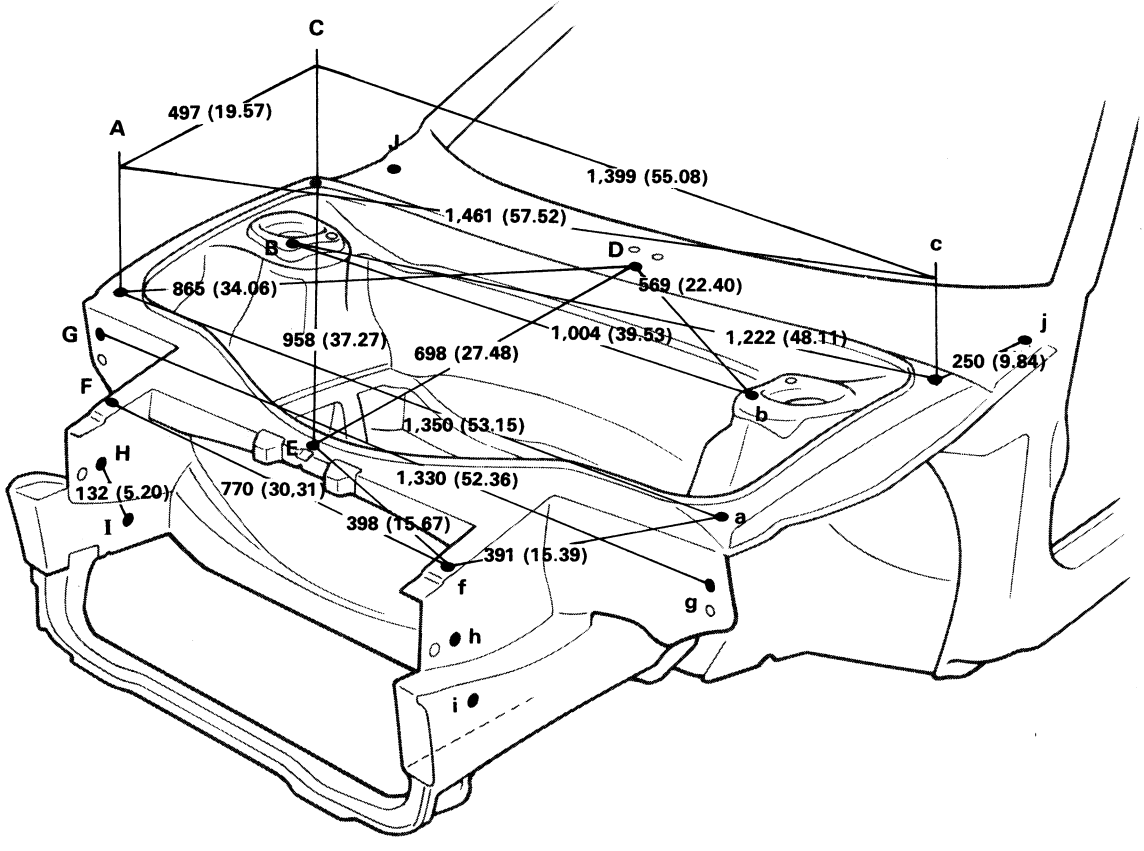

mm(in.)

Symbol	Name	Hole dia.
A, a	Front fender installation nut – front	6 (0.24) nut
B, b	Front suspension brace installation nut	10 (0.39) nut
C, c	Front fender installation nut – rear	6 (0.24) nut
D	Wiper pivot installation hole (center)	7 (0.28)
E	Radiator upper seal installation hole (center)	7 (0.28)
F, f	Radiator upper seal installation hole	7 (0.28)
G, g	Front luggage end panel standard hole	10 (0.39)
H, h	Radiator support standard hole	10 (0.39)
I, i	Front side member standard hole	15 (0.59)
J, j	Hood hinge installation nut – rear	8 (0.31) nut

BO5065

UNDER BODY

(Three-Dimensional Distance)

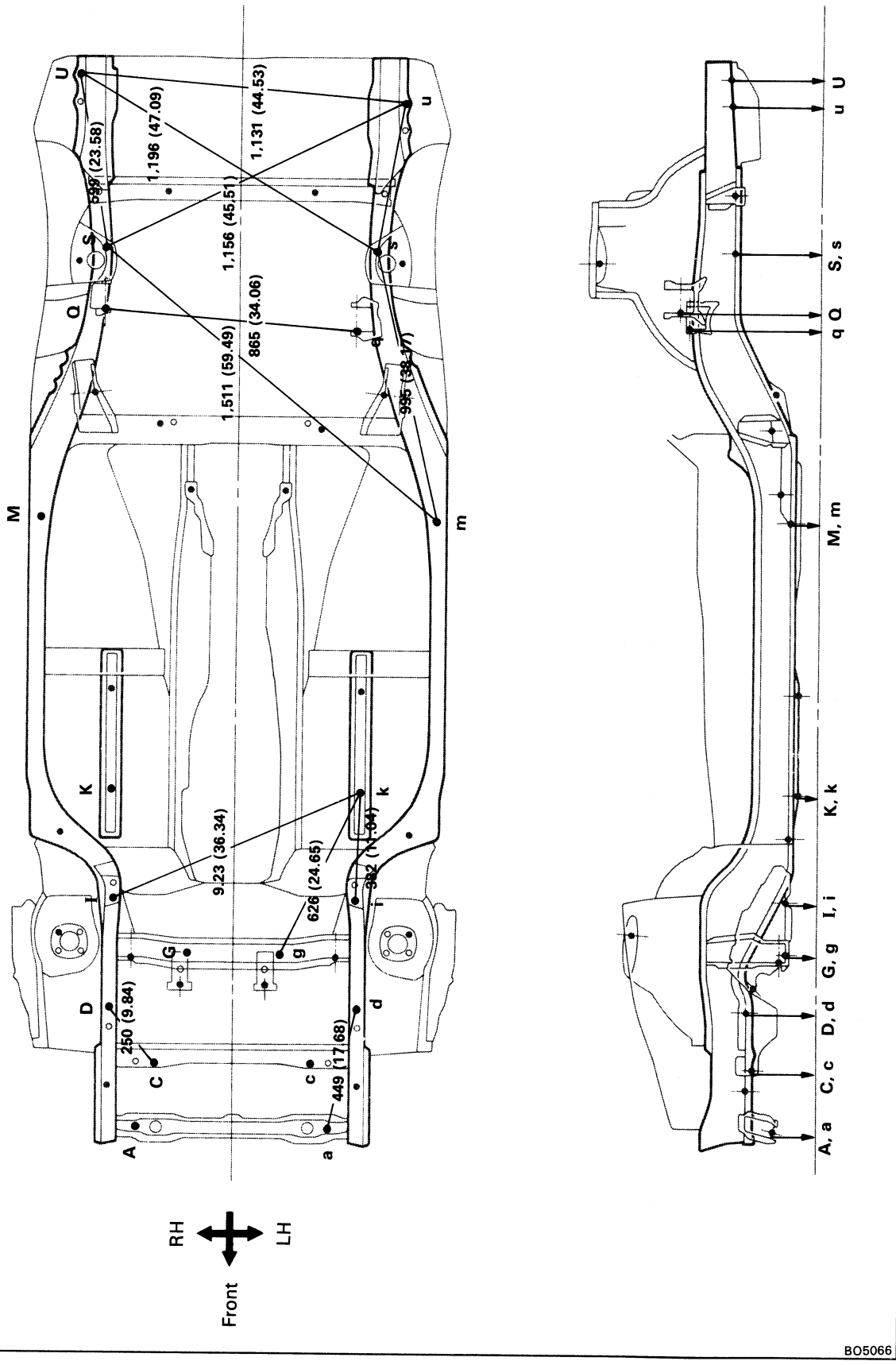

mm (in.)

Symbol	Name	Hole dia.	Symbol	Name	Hole dia.
A, a	Front cross member standard hole	10 (0.39)	K, k	Front floor under reinforcement standard hole	15 (0.59)
C, c	Strut bar bracket installation nut-front = inner	10 (0.39)	M, m	Rear floor side member standard hole	15 (0.59)
D, d	Strut bar bracket installation nut-rear = rear	10 (0.39)	Q, q	Engine mounting bracket hole-front	13 (0.51)
G, g	Steering gear box support member standard hole	15 (0.59)	S, s	Rear suspension cross member installation nut-front	14 (0.55) nut
I, i	Stabilizer bar installation nut-front	8 (0.31) nut	U, u	Tail pipe bracket installation nut	8 (0.31) nut

UNDER BODY (Con'd)

(Three-Dimensional Distance)

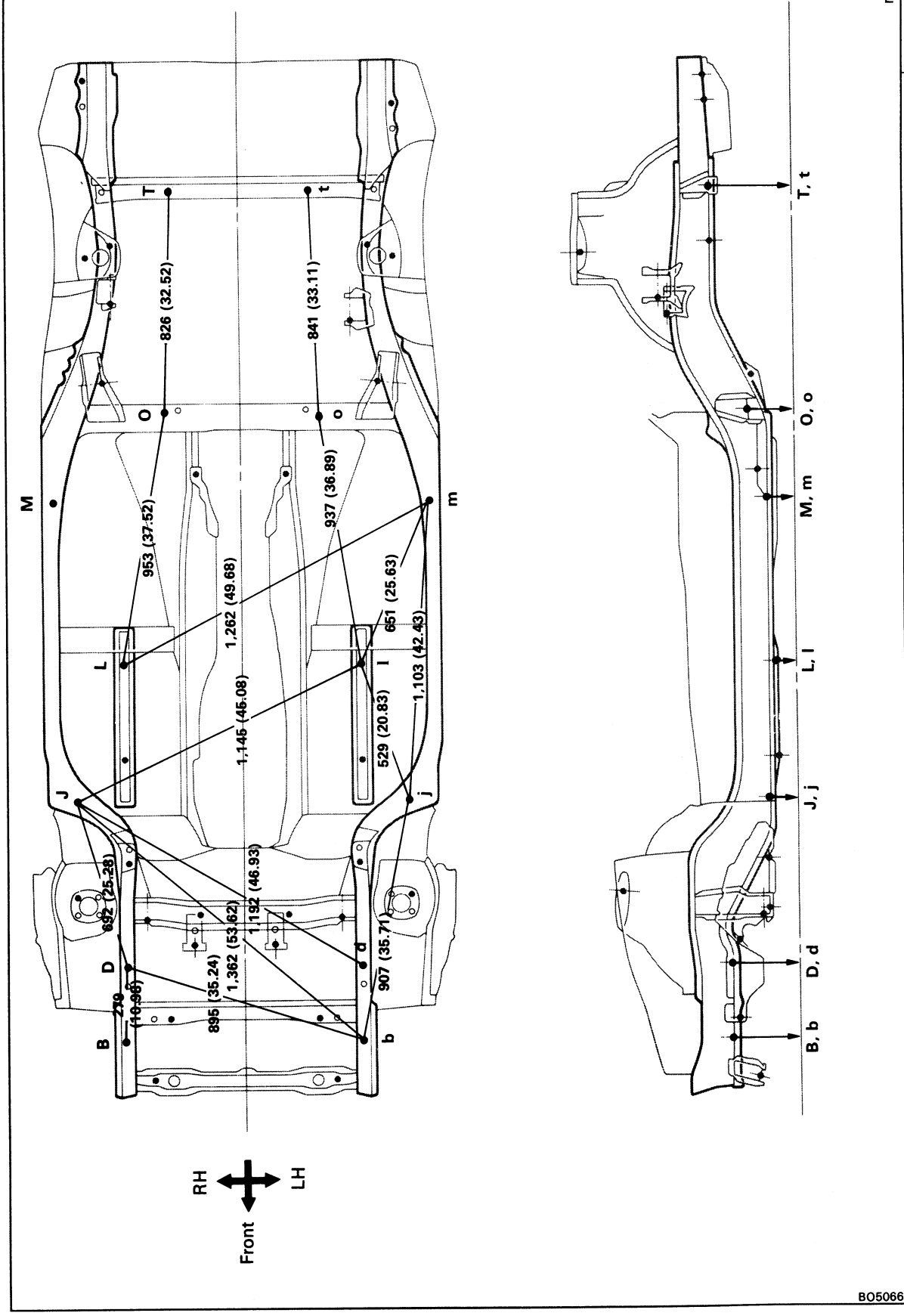

mm (in.)

Symbol	Name	Hole dia.
B, b	Front side member standard hole	15 (0.59)
D, d	Strut bar bracket installation nut-rear = rear	10 (0.39) nut
J, j	Front side member standard hole	15 (0.59)
L, l	Front floor under reinforcement standard hole	15 (0.59)

Symbol	Name	Hole dia.
M, m	Rear floor side member standard hole	15 (0.59)
O, o	Room partition cross member standard hole	15 (0.59)
T, t	Rear floor cross member standard hole	15 (0.59)
–	–	–

BO5066

UNDER BODY (Con'd)

(Two-Dimensions Distance)

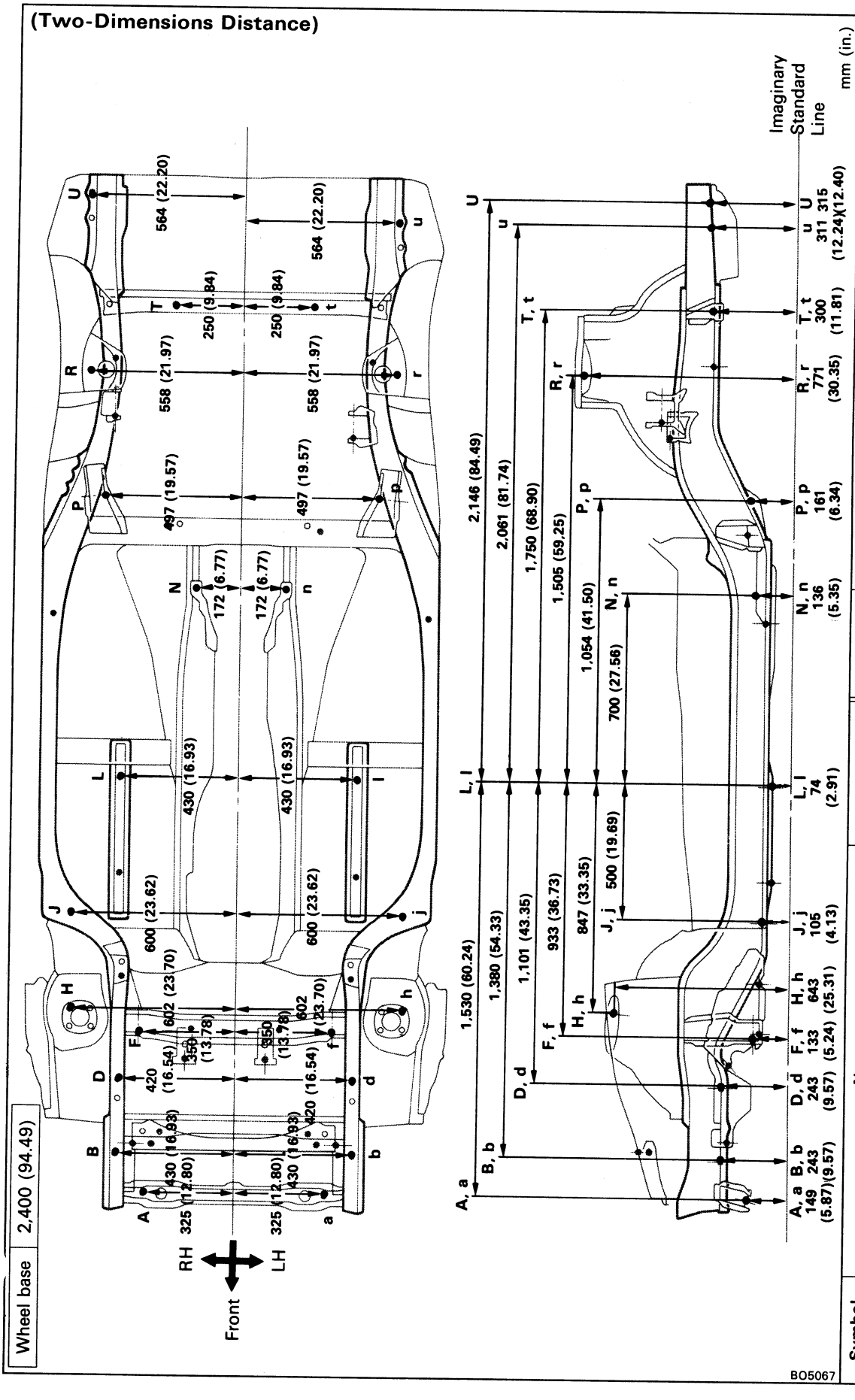

Symbol	Name	Hole dia.
A, a	Front cross member standard hole	10 (0.39)
B, b	Front side member standard hole	15 (0.59)
D, d	Strut bar bracket installation nut-rear=rear	10 (0.39) nut
F, f	Lower arm installation hole	13 (0.51)
H, h	Front spring support hole-rear=outer	9 (0.35)
J, j	Front side member standard hole	15 (0.59)

Symbol	Name	Hole dia.
L, l	Front floor under reinforcement standard hole	15 (0.59)
N, n	Center floor cross member No. 2 installation nut	8 (0.31) nut
P, p	Strut bar installation hole	12 (0.47)
R, r	Rear spring support hole-outer	11 (0.43)
T, t	Rear floor cross member standard hole	15 (0.59)
U, u	Tail pipe bracket installation nut	8 (0.31) nut

UNDER BODY (Con'd)

(Two-Dimensional Distance)

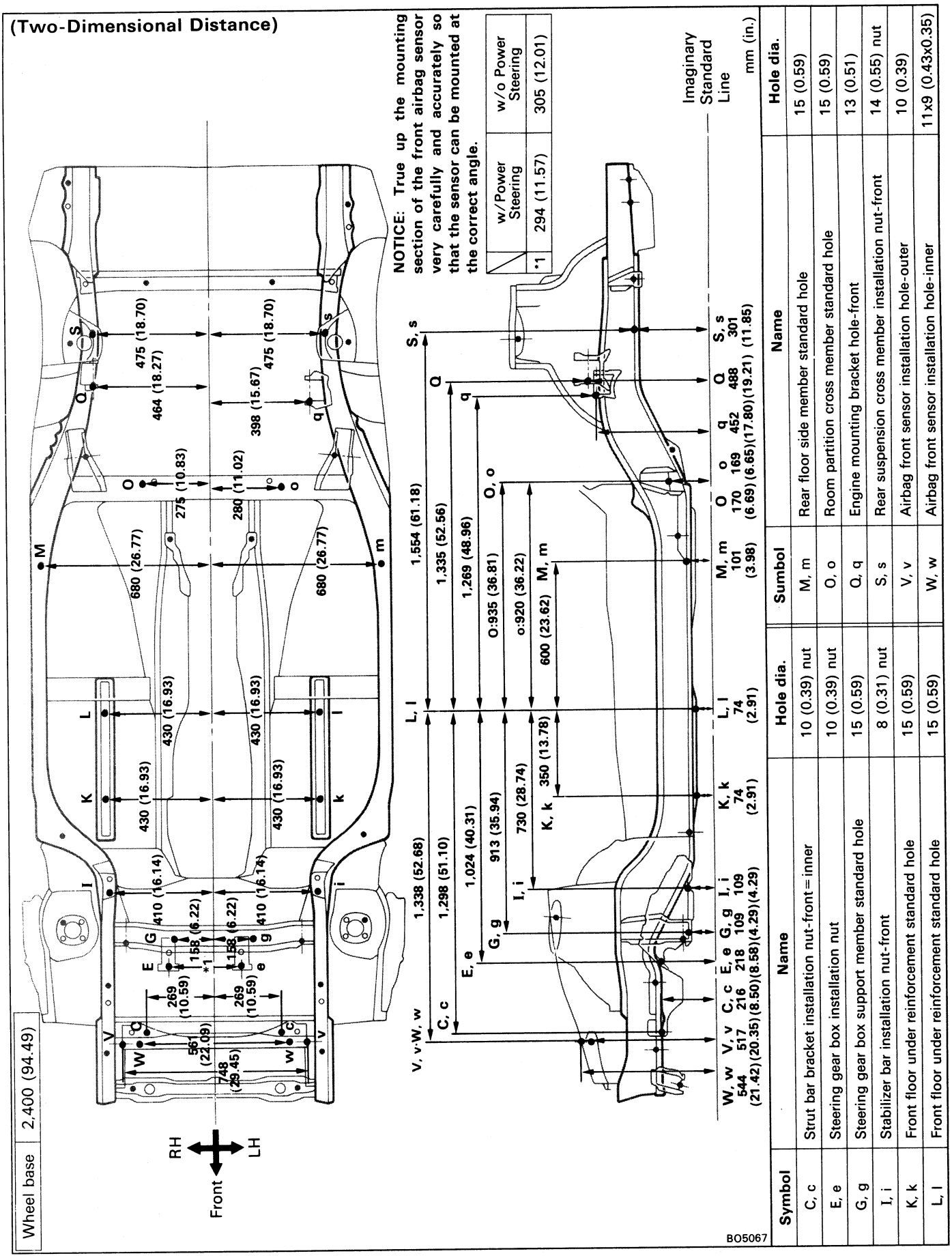

Symbol	Name	Hole dia.	Symbol	Name	Hole dia.
C, c	Strut bar bracket installation nut-front = inner	10 (0.39) nut	M, m	Rear floor side member standard hole	15 (0.59)
E, e	Steering gear box installation nut	10 (0.39) nut	O, o	Room partition cross member standard hole	15 (0.59)
G, g	Steering gear box support member standard hole	15 (0.59)	Q, q	Engine mounting bracket hole-front	13 (0.51)
I, i	Stabilizer bar installation nut-front	8 (0.31) nut	S, s	Rear suspension cross member installation nut-front	14 (0.55) nut
K, k	Front floor under reinforcement standard hole	15 (0.59)	V, v	Airbag front sensor installation hole-outer	10 (0.39)
L, l	Front floor under reinforcement standard hole	15 (0.59)	W, w	Airbag front sensor installation hole-inner	11x9 (0.43x0.35)

BODY OPENING AREAS (Side View: w/T-Bar Roof)

(Three-Dimensional Distance)

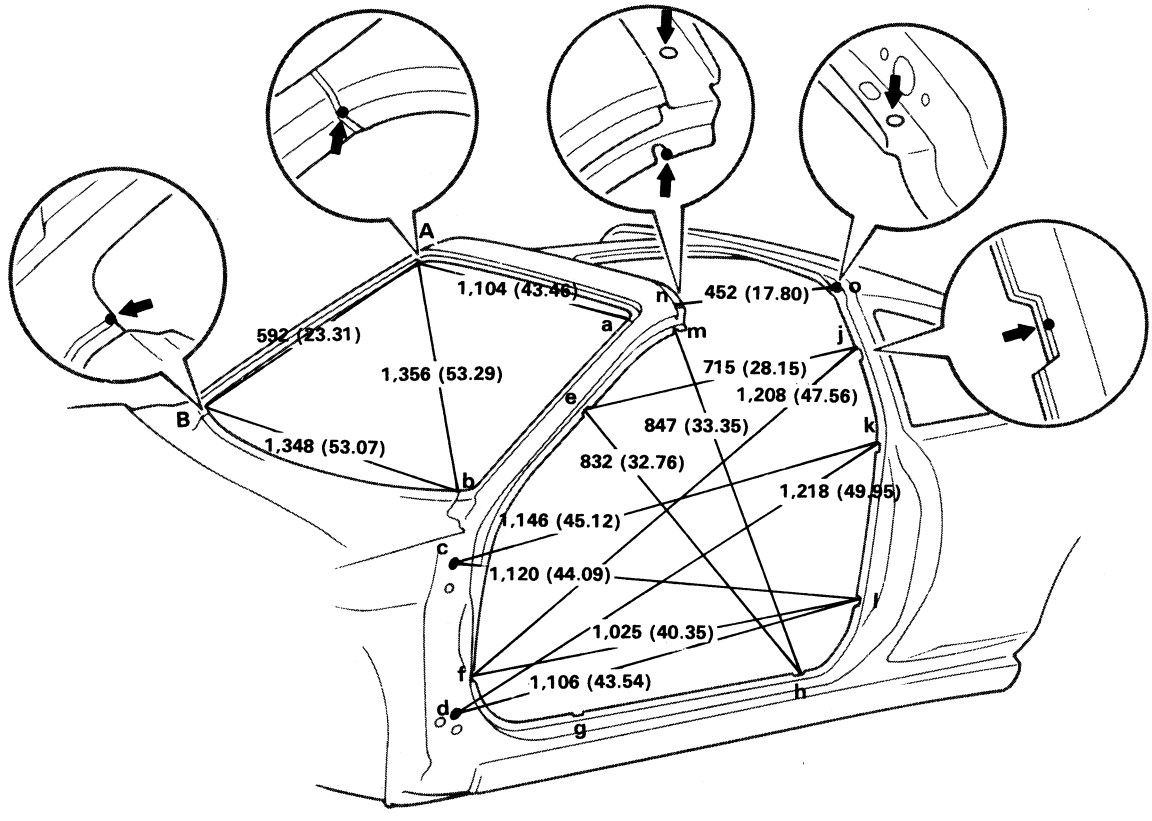

Vehicle Dimensions Left ↔ Right

E-e	F-f	G-g	H-h	J-j	K-k	L-l	M-m	N-n	O-o
1,253 (49.33)	1,402 (55.02)	1,444 (56.85)	1,444 (56.85)	1,233 (48.54)	1,378 (54.25)	1,412 (55.59)	1,101 (43.35)	1,039 (40.91)	1,065 (41.93)

HINT: For symbols, capital letters indicate right side of vehicle, small letters indicate left side of vehicle (Seen for rear).

E-g or e-G	E-h or e-H	E-j or e-J	F-g or f-G	F-l or f-L	G-h or g-H	G-j or g-J	H-j or h-J	H-k or h-K	H-m or h-M	J-l or j-L	J-m	J-M	N-o or n-O
1,510 (59.45)	1,581 (62.24)	1,434 (56.46)	1,455 (57.28)	1,741 (68.54)	1,545 (60.83)	1,713 (67.44)	1,540 (60.63)	1,515 (59.65)	1.519 (59.80)	1,433 (56.42)	1,258 (49.53)	1,257 (49.49)	1,145 (45.08)

mm (in.)

Symbol	Name	Hole dia.
A, a	Roof panel/Front body pillar adjoining portion	–
B, b	Front body pillar/Cowl panel adjoining portion	–
C, c	Front door hinge installation nut	8 (0.31) nut
D, d	Front door hinge installation nut	8 (0.31) nut
E, e	Front body pillar assembly mark	–
F, f	Front body pillar assembly mark	–
G, g	Rocker panel assembly mark	–
H, h	Rocker panel assembly mark	–
J, j	Quarter panel assembly mark	–
K, k	Quarter panel assembly mark	–
L, l	Quarter panel assembly mark	–
M, m	Front body pillar cut-out portion	–
N, n	Removable roof weatherstrip installation hole	7 (0.28)
O, o	Removable roof weatherstrip installation hole	7 (0.28)

BO5068

BODY OPENING AREAS (Side View: w/o T-Bar Roof)

(Three-Dimensional Distance)

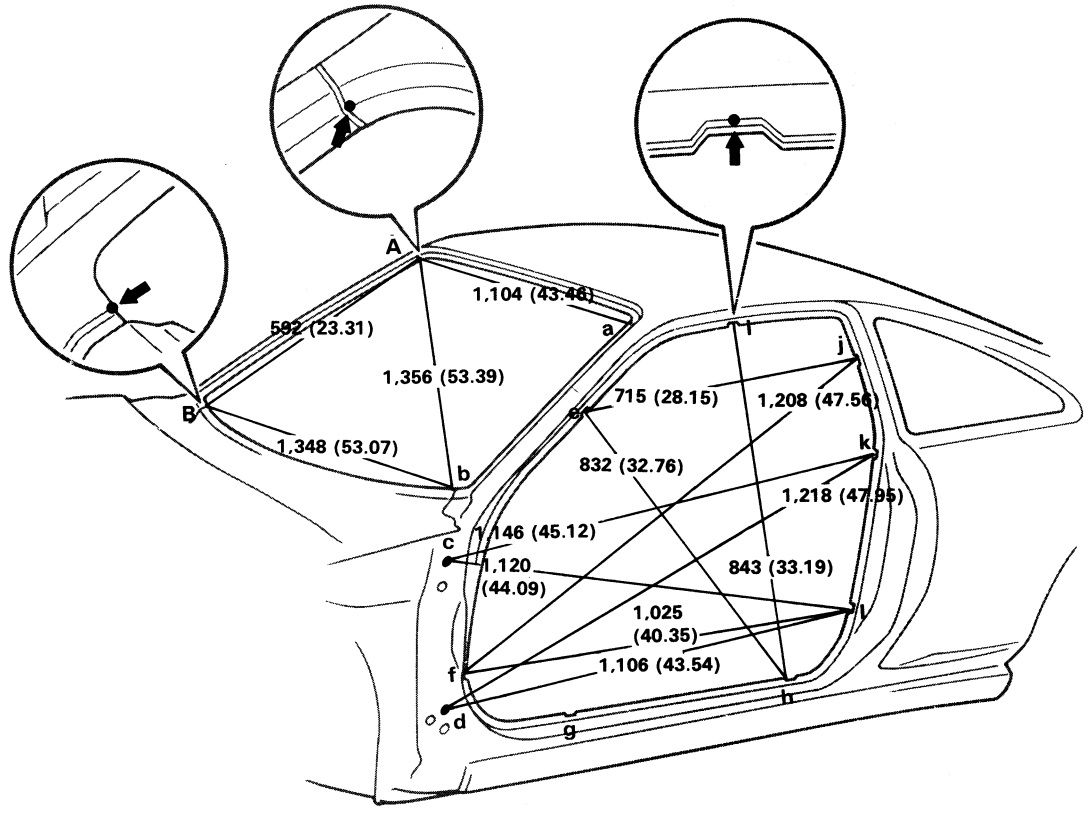

Vehicle Dimensions Left ↔ Right

E-e	F-f	G-g	H-h	I-i	J-j	K-k	L-l
1,253 (49.33)	1,402 (55.20)	1,444 (56.85)	1,444 (56.85)	1,078 (42.44)	1,233 (48.54)	1,378 (54.25)	1,412 (55.59)

HINT: For symbols, capital letters indicate right side of vehicle, small letters indicate left side of vehicle (See for rear).

E-g or e-G	E-h or e-H	E-j or e-J	E-l or e-L	F-g or f-G	F-l or f-L	G-h or g-H	G-j or g-J	H-i or h-I	H-j or h-J	H-k or h-K	J-l or j-L
1,510 (59.45)	1,581 (62.24)	1,434 (56.46)	1,579 (62.17)	1,455 (57.28)	1,741 (68.54)	1,545 (60.83)	1,713 (67.44)	1,506 (59.29)	1,540 (60.23)	1,515 (59.65)	1,433 (56.42)

mm (in.)

Symbol	Name	Hole dia.
A, a	Roof panel/Front body pillar adjoining portion	–
B, b	Front body pillar/Cowl panel adjoining portion	–
C, c	Front door hinge installation nut	8 (0.31) nut
D, d	Front door hinge installation nut	8 (0.31) nut
E, e	Front body pillar assembly mark	–
F, f	Front body pillar assembly mark	–
G, g	Rocker panel assembly mark	–
H, h	Rocker panel assembly mark	–
I, i	Roof side rail assembly mark	–
J, j	Quarter panel assembly mark	–
K, k	Quarter panel assembly mark	–
L, l	Quarter panel assembly mark	–

BO5069

BODY OPENING AREAS (Rear View)

(Three-Dimensional Distance)

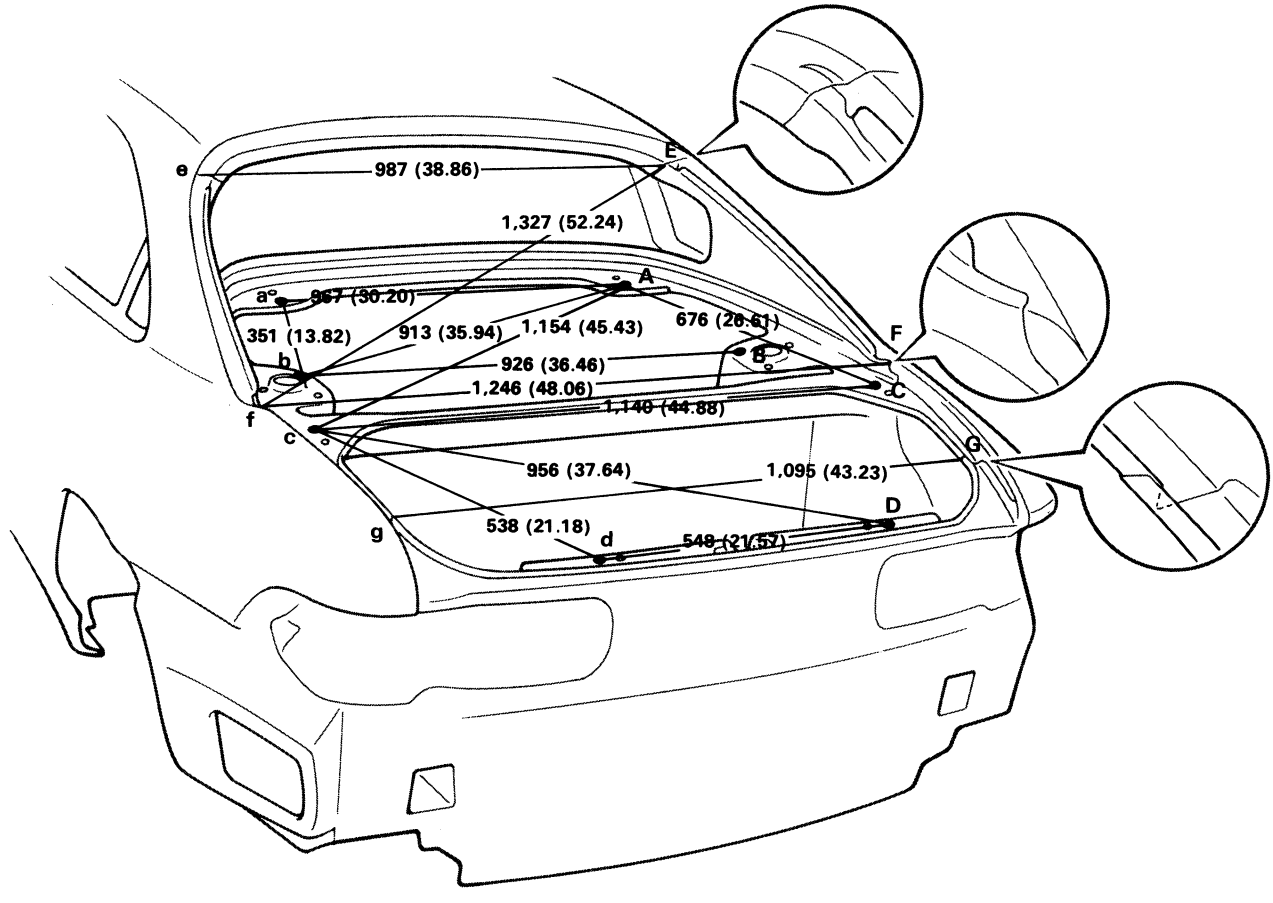

mm (in.)

Symbol	Name	Hole dia.
A, a	Engine hood hinge installation hole-rear	12 (0.47)
B, b	Rear sping support hole-inner = front	11 (0.43)
C, c	Luggage door hinge installation hole-front	9 (0.35)
D, d	Luggage finish plate installation hole	8.5 (0.335)
E, e	Roof panel/Roof side panel adjoining portion	–
F, f	Roof side panel/Quarter panel adjoining portion	–
G, g	Luggage opening trough/Quarter panel adjoining portion	–

BO5070

AIR CONDITIONING SYSTEM

	Page
GENERAL INFORMATION	AC-2
DESCRIPTION	AC-4
PREPARATION	AC-7
TROUBLESHOOTING	AC-8
REFRIGERATION SYSTEM	AC-10
DRIVE BELT	AC-14
REFRIGERATION LINES	AC-15
COMPRESSOR	AC-16
RECEIVER	AC-29
CONDENSER	AC-30
COOLING UNIT	AC-32
EVAPORATOR	AC-36
EXPANSION VALVE	AC-36
THERMISTOR	AC-37
A/C CONTROL ASSEMBLY	AC-38
PRESSURE SWITCH	AC-42
WATER TEMPERATURE SENSOR	AC-42
SERVOMOTORS	AC-43
BLOWER MOTOR	AC-43
CONDENSER FAN MOTOR	AC-44
BLOWER RESISTOR	AC-44
HEATER MAIN RELAY	AC-44
MAGNETIC CLUTCH RELAY	AC-44
FAN MAIN RELAY	AC-45
FAN RELAY NO. 1	AC-45
FAN RELAY NO. 2	AC-45
FAN RELAY NO. 3	AC-45
VACUUM HOSE CIRCUIT	AC-45
VACUUM SWITCHING VALVE (VSV)	AC-46
A/C AMPLIFIER	AC-47

GENERAL INFORMATION

ELECTRICAL PARTS

Before removing and inspecting the electrical parts, set the ignition switch to the LOCK position and disconnect the negative (–) terminal cable from the battery.

CAUTION: Work must not be started until sfter at least 20 seconds or longer from the time the negative (–) terminal cable is disconnected.

SRS AIRBAG SYSTEM

Failure to carry out service operation in the correct sequence could cause the airbag system to deploy, possibly leading to a serious accident.
When removal or installtion of the parts and the yellow wire harness and connector for the airbag is necessary, refer to the precautionary notices in the AB section before performing the operation.

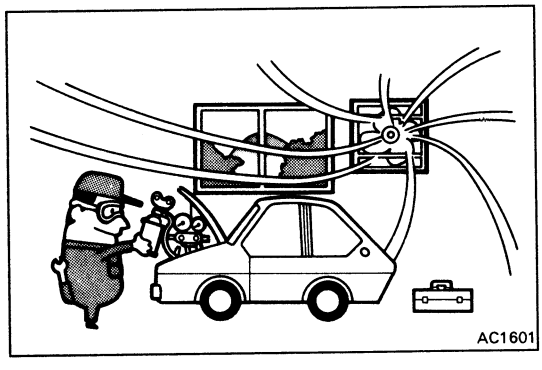
AC1601

AC1602

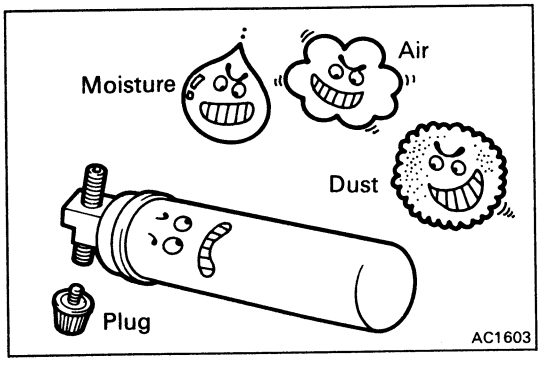

AC1603

REFRIGERATION SYSTEM

1. **WHEN HANDLING REFRIGERANT (R-12), FOLLOWING PRECAUTIONS MUST BE OBSERVED;**
   (a) Do not handle refrigerant in an enclosed area or near an open flame.
   (b) Always wear eye protection.
   (c) Be careful that liquid refrigerant does not get in your eyes or on your skin.

   If liquid refrigerant gets in your eyes or on your skin;
   - Do not rub.
   - Wash the area with lots of cool water.
   - Apply clean petroleum jelly to the skin.
   - Go immediately to a physician or hospital for professional treatment.
   - Do not attempt to treat yourself.

2. **WHEN REPLACING PARTS IN REFRIGERANT LINE;**
   (a) Discharge the refrigerant in the line slowly before replacement.
   (b) Insert a plug immediately in disconnected parts to prevent the entry of moisture and dust.
   (c) Do not leave a new condenser or receiver, etc., lying around with the plug removed.

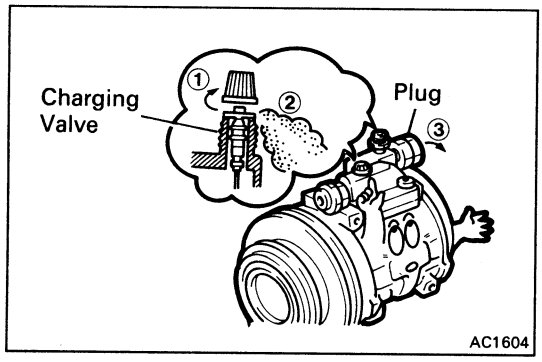

(d) Discharge the refrigerant from the charging valve before installing a new compressor.

If the refrigerant is not discharged first, compressor oil will spray out with the refrigerant gas when the plug is removed.

(e) Do not use a torch for tube bending or lengthening operations.

If tubes are heated with a torch, a layer of oxidation forms inside the tube, causing the same king of trouble as an accumulation of dust.

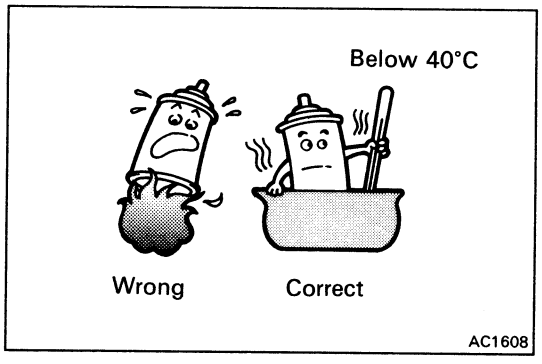

3. WHEN HANDLING REFRIGERANT CONTAINER (SERVICE CAN);

(a) The container must never be heated.

(b) Containers must be kept below 40°C (104°F)

(c) If warming a service can with hot water, be careful that the valve on top of the service can is never immersed in the water, as the water may permeate the refrigerant cycle.

(d) Empty service cans must never be re-used.

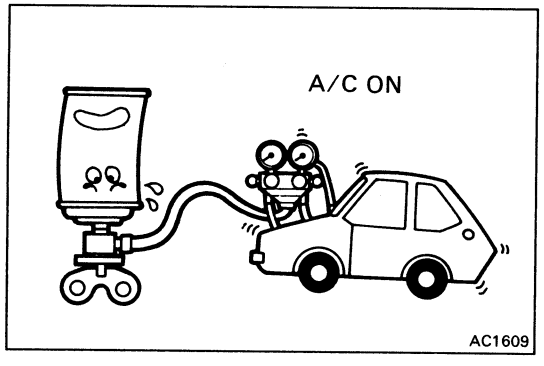

4. WHEN A/C IS ON AND REFRIGERANT GAS IS BEING REPLENISHED;

(a) If there is not enough refrigerant gas in the refrigerant cycle, oil lubrication will be insufficient and compressor burnout may occur, so take care to avoid this.

(b) If the valve on the high pressure side is opened, refrigerant flows in the reverse direction and could cause the service can to rupture, so open and close the valve on the low pressure side only.

(c) If the service can is inverted and refrigerant is loaded in a liquid state, the liquid is compressed and causes the compressor to break down, so the refrigerant must be in a gaseous state.

(d) Be careful not to load too much refrigerant gas, as this cause trouble such as inadequate cooling, poor fuel economy, engine overheating, etc.

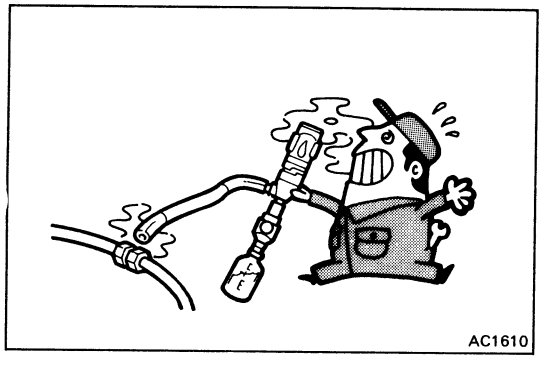

5. WHEN USING GAS-CYLINDER TYPE GAS LEAK TESTER;

(a) As a naked flame is used, first make sure that there are no flammable substances nearby before using it.

(b) Be careful, as a poisonous gas is produced when refrigerant gas comes in contact with heated parts.

DESCRIPTION

LOCATIONS OF A/C SYSTEM

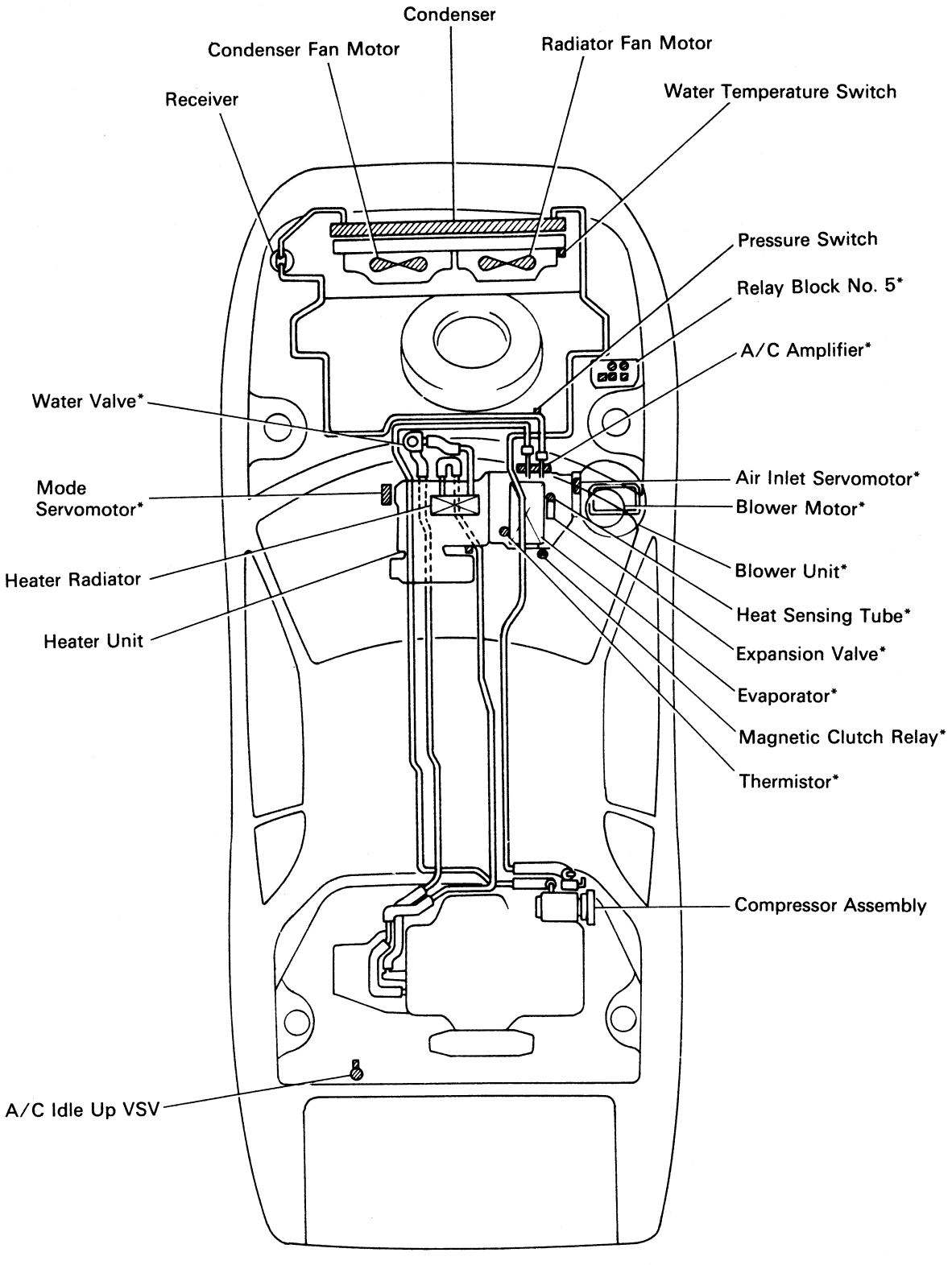

RHD vehicles, for parts marked (*), are in always symmetrically opposite to LHD vehicles.

AC2586

ELECTRICAL WIRING DIAGRAMS

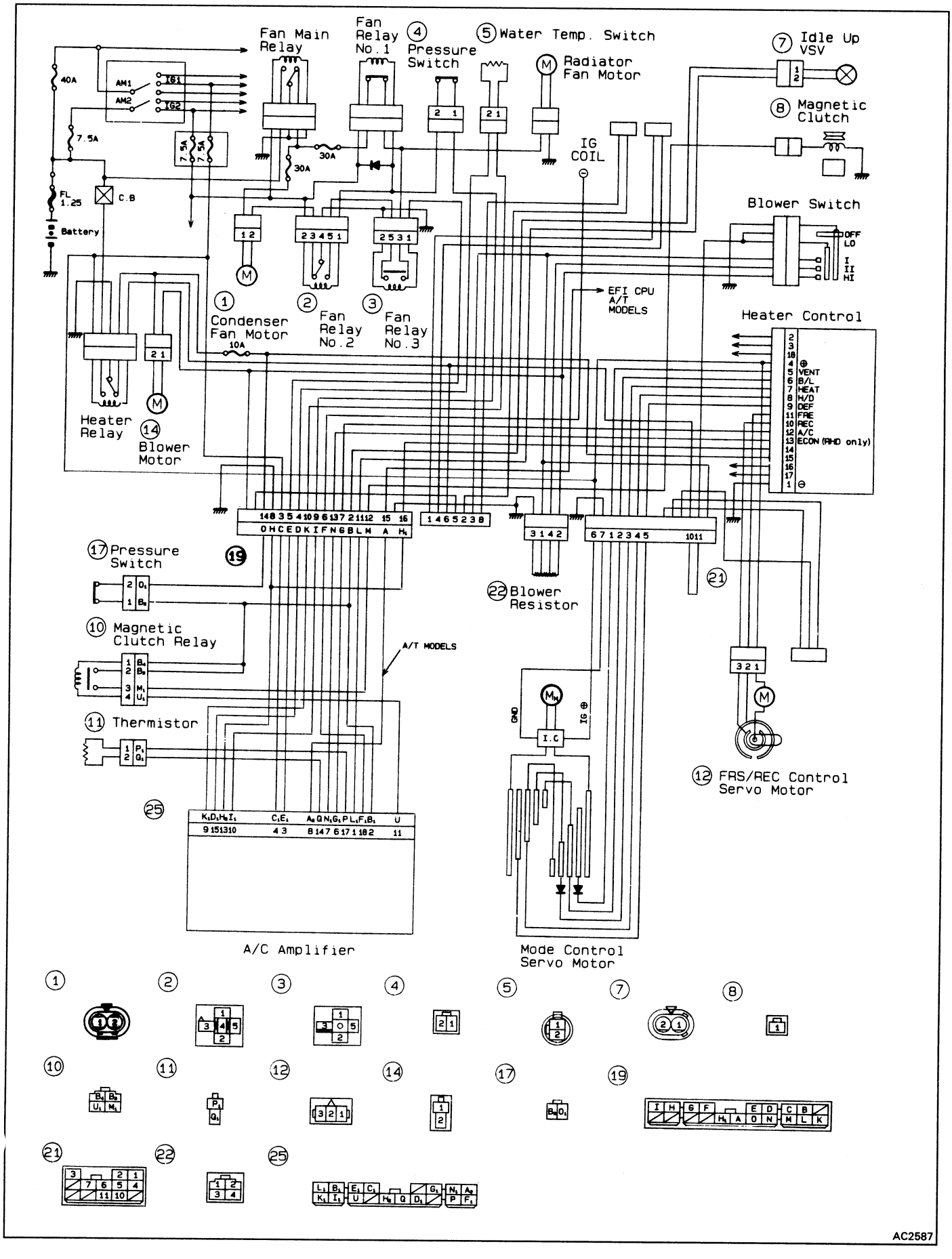

AC2587

DAMPARS POSITION

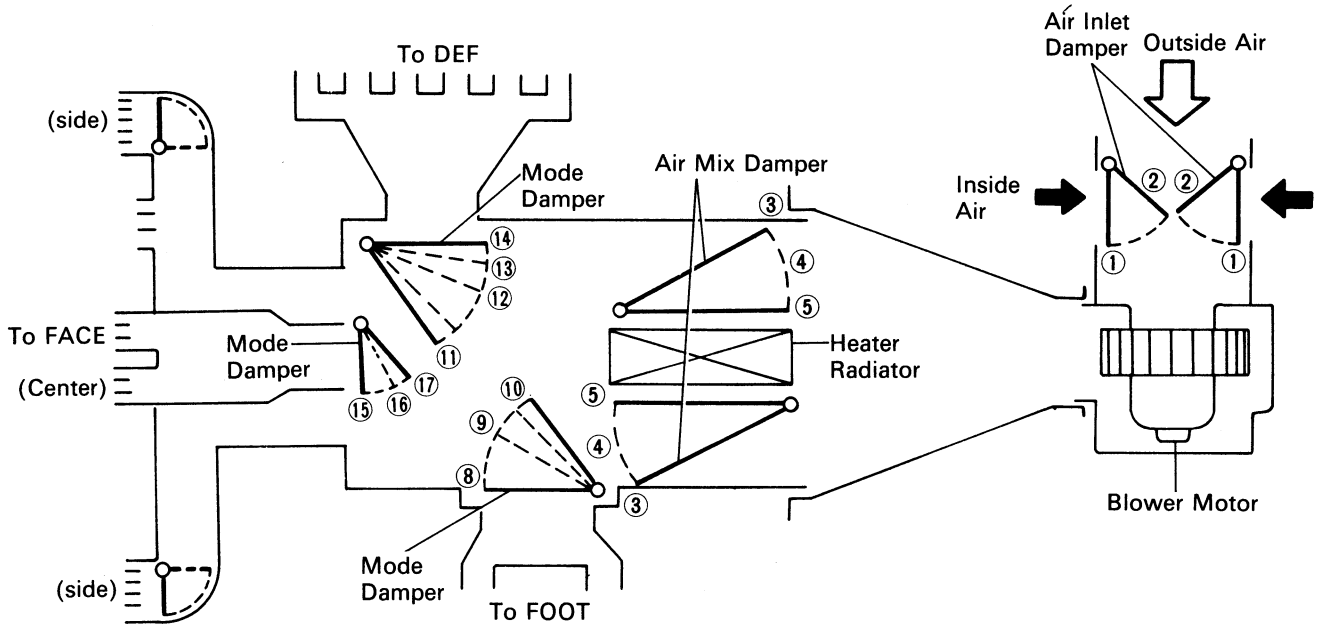

A/C control switch	A/C control lever position	Dampers position	Air flow vents			
			FACE		FOOT	DEF
			Center	Side		
Air Inlet Control Lever	Fresh	①				
	Recirc	②				
Temperature Control Lever	Warm ⇕ Cool	③ ⇕ ④ ⇕ ⑤				
Mode Control Lever	Def.	⑧ ⑪ ⑮		○		◯
	Foot/Def.	⑨ ⑫ ⑮		○	○	○
	Foot	⑩ ⑬ ⑮		○	◯	○
	Bi-Level	⑨ ⑭ ⑯	○	○	○	
	Face	⑧ ⑭ ⑰	◯	◯		

The size of circle (○) indicates the proportion of the air flow volume.

AC2588
001BE

PREPARATION

SPECIAL TOOLS AND EQUIPMENT

Tool	SST No.	Use
Air conditioner service tool set	07110-58011	To evacuate and charge system
Ohmmeter	–	To perform electrical diagnosis
Voltage meter	–	To perform electrical diagnosis
Ammeter	–	To perform electrical diagnosis
Magnetic clutch tool set	07110-77011	General set for magnetic clutch
Magnetic clutch remover	07112-71010	To remove pressure plate
Snap ring pliers (External type)	07114-84020	To remove and install rotor and stator
Key remover	07112-45021	To remove key
Seal plate remover	07112-15010	To remove seal plate
Seal plate presser	07114-15010	To remove and install shaft seal
Hexagon wrench set	07110-61050	To remove and install service valve and front housing
Shaft seal remover	07112-25010	To install seal plate
Key replacer	07114-45010	To install key

SSM (SPECIAL SERVICE MATERIALS)

Part Name	Part No.	Use etc.
DENSOOIL 6, SUNISO No. 5GS or equivalent	07117-68040 –	Compressor

TROUBLESHOOTING

You will find the cause of trouble more easily by properly using the table shown below. In this table, the numbers indicate the order of priority of the causes of trouble. Check each part in the order shown. If necessary, replace the part.

See page / Parts Name / Trouble	Inspect Volume of Refrigerant (AC-12)	Inspect Refrigeration System with Manifold Gauge Set (AC-10)	Inspect Drive Belt Tension (AC-14)	Fusible Link (ALT) (AC-5)	Circuit Breaker (HEATER) (AC-5)	Fuse (A/C) (AC-5)	Pressure Switch (AC-42)	Thermistor (AC-37)	Water Temp. Sensor (CO-42)	Heater Main Relay (AC-44)	Magnetic Clutch Relay (AC-44)	Engine Main Relay and Fan Relay No. 1, 2, 3 (CO-45)	Blower Resistor (AC-44)	Air Inlet Servomotor (AC-43)
No blower operation				1	2					3			6	
No blower control														
No air flow mode control														
No air inlet control														2
Insufficient flow of cool air										1			3	
Insufficient flow of warm air										1			3	
No cool air comes out	3	4	5			1	6	12			2			
Cool air comes out intermittently	1	2	3					5						
Cool air comes out only at high engine speed	2	3	1											
Insufficient cooling	1	2	3					13	7			6		
No warm air comes out														
Air temp. control not functioning														
No engine idle up when A/C switch on														

Mode Servomotor	Blower Motor	Condenser Fan Motor	A/C Control Assembly	A/C Amplifier	Compressor	Condenser	Evaporator	Expansion Valve (Replace)	Magnetic Clutch	Receiver	Water Valve	Radiator (in Heater Unit)	A/C Idle Up VSV	Wiring or Wiring Connection
AC-43	AC-43	CO-44	AC-38	AC-47	AC-16	AC-30	AC-36	—	AC-16	AC-29	—	—	AC-46	AC-5
	5		4											7
			1											3
2			1											3
			1											3
	2						4							5
	2											4		5
			10	11	8				7		9			13
				4				6						7
					5	4								
		8		12	11	4	14	15	10	5	9			
			2								1	3		4
			2								1			3
				2									1	3

REFRIGERATION SYSTEM

INSPECTION OF REFRIGERATION SYSTEM WITH MANIFOLD GAUGE SET

This is a method in which the trouble is located by using a manifold gauge set. (See "Installation of Manifold Set" on page AC-13.) Read the manifold gauge pressure when the following conditions are established:

(a) Temperature at the air inlet with the switch set at RECIRC is 30 – 35°C (86 – 95°F)

(b) Engine running at 2,000 rpm

(c) Blower fan speed control switch set at high speed

(d) Temperature control switch set at max cool side

HINT: It should be noted that the gauge indications may vary slightly due to ambient temperature conditions.

No.	Gauge reading kg/cm² (psi, kPa)	Condition	Probable	Remedy
1	LO: 1.5 – 2.0 (21 – 28, 147 – 196) HI: 14.5 – 15.0 (206 – 213, 1,422 – 1,471) 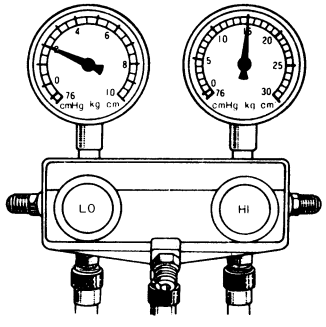 AC0067	Normal cooling	Normally functioning system	
2	During operation, pressure at low pressure side sometimes becomes a vacuum and sometimes normal 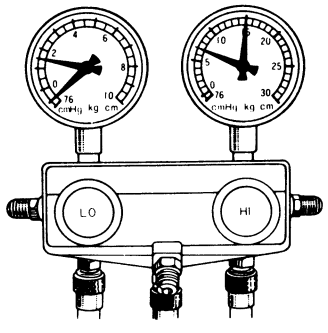 AC0068	Periodically cools and then fails to cool	Moisture present in refrigeration system	(1) Replace receiver (2) Remove moisture in system through repeatedly evacuating air (3) Charge with refrigerant to proper amount
3	Pressure low at both low and high pressure sides 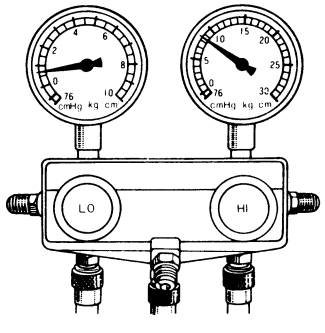 AC0069	● Insufficient cooling ● bubbles seen in sight glass	Insufficient refrigerant	(1) Using gas leak tester, check for leakage (2) Charge refrigerant to proper amount
		● Insufficient cooling ● Frost on tubes from receiver to unit	Refrigerant flow obstructed by dirt in receiver	Replace receiver

No.	Gauge reading kg/cm² (psi, kPa)	Condition	Probable cause	Remedy
4	Pressure too high at both low and high pressure side	Insufficient cooling	Insufficient cooling of condenser	(1) Clean condenser (2) Check fan motor operation
5	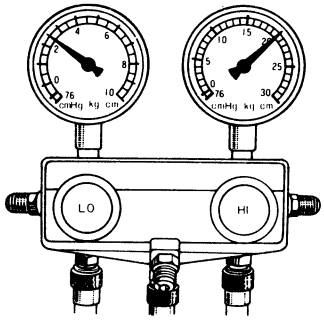		Refrigerant over charged	Check amount of refrigerant HINT: Vent out refrigerant throuh gauge manifold low pressure side by gradually opening valve
6			Air present in system	(1) Replace receiver (2) Check compressor oil to see if dirty or insufficient (3) Evacuate air and charge with new refrigerant
7	AC0070	● Insufficient cooling ● Frost or large amount of dew on piping at low pressure side	Expansion valve improperly mounted, heat sensing tube defective (Opens too wide)	(1) Check heat sensing tube installation condition (2) If (1) is normal, check expansion valve (3) Replace if defective
8	Vacuum indicated at low pressure side, very low pressure indicated at high pressure 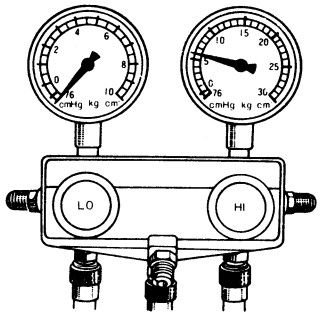 AC0156	● Does not cool (Cools from time to time in some cases) ● Frost or dew seen on piping before and after receiver or expansion valve	Refrigerant does not circulate	Alow to stand for some time and then restart operation to determine if trouble is caused by moisture or dirt If caused by moisture refer to procedures step 2 on page AC-10 If caused by dirt, remove expansion valve and clean off dirt by blowing with air. If not able to remove dirt, replace valve Evacuate air and charge with new refrigerant to proper amount For gas leakage from heat sensing tube, replace expansion valve

HINT at No. 6
These gauge indications are shown when the refrigeration system has been opened and the refrigerant charged without evacuating air.

No.	Gauge reading kg/cm² (psi, kPa)	Condition	Probable cause	Remedy
9	Pressure too high at low pressure side, pressure too low at high pressure side. 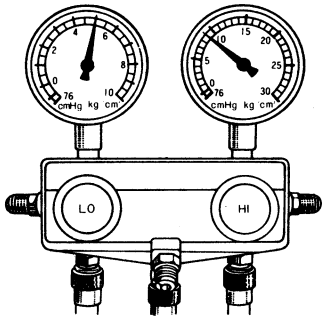 AC0157	Does not cool	Insufficient compression	Repair or replace compressor

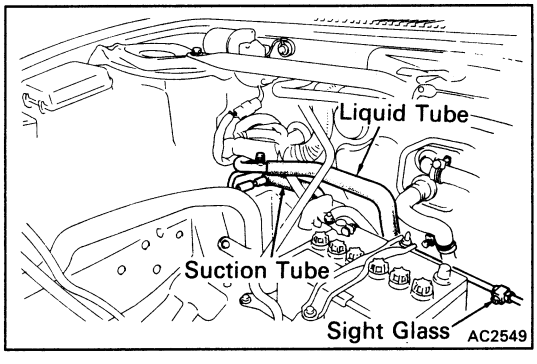

INSPECTION OF REFRIGERANT VOLUME

1. **RUN ENGINE AT APPROX. 1,500 RPM**
2. **OPERATE A/C AT MAXIMUM COOLING FOR A FEW MINUTES**
3. **INSPECT AMOUNT OF REFRIGERANT**
   Observe the sight glass on the liquid tube.

Item	Symptom	Amount of refrigerant	Remedy
1	Bubbles present in sight glass	Insufficient*	Check for gas leakage with gas leak tester
2	No bubbles present in sight glass	None, sufficient or too much	Refer to items 3 and 4
3	No temperature difference between compressor inlet and out let	Empty or nearly empty	Evacuate and charge system. Then check for gas leakage with gas leak tester
4	Temperature between compressor inlet and outlet is noticeably different	Proper or too much	Refer to items 5 and 6
5	Immediately after air conditioner is turned off, refrigerant in sight glass stays clear	Too much	Discharge excess refrigerant to specified amount
6	When air conditioner is turned off, refrigerant foams and then stays clear	Proper	Refer to items 3 and 4

*: Bubbles in the sight glass with ambient temperatures higher can be considered normal if cooling is sufficient.

DISCHARGING OF REFRIGERANT IN REFRIGERATION SYSTEM

(See Air Conditioning Fundamentals and Repairs Pub. No. 36950E)

EVACUATING OF AIR IN REFRIGERATION SYSTEM AND CHARGING WITH REFRIGERANT.

(See Air Conditioning Fundamentals and Repairs Pub. No. 36950E)

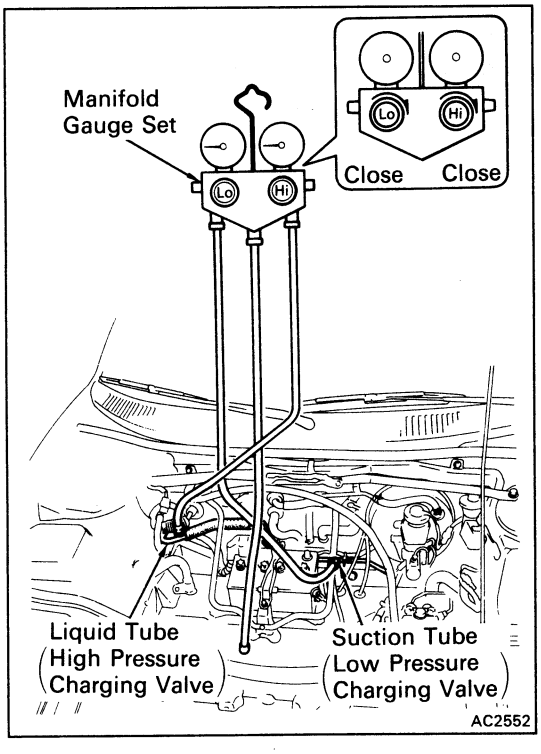

INSTALLATION OF MANIFOLD GAUGE SET

1. **CLOSE BOTH HIGH AND LOW HAND VALVES**
2. **CONNECT CHARGING HOSES TO CHARGING VALVES**
   (a) Connect the low pressure hose to the low pressure charging valve and the high pressure hose to the high pressure charging valve.
   (b) Tighten the hose nuts by hand.

NOTICE: Do not apply compressor oil to the seats of the connection.

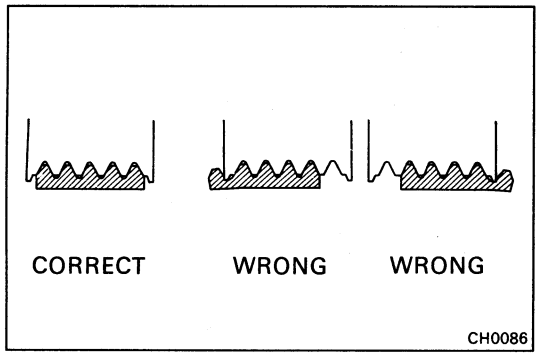

DRIVE BELT

INSPECTION OF DRIVE BELT TENSION

1. **MAKE SURE THAT DRIVE BELT IS INSTALLED CORRECTLY**

   Check that the drive belt fits properly in the ribbed grooves.

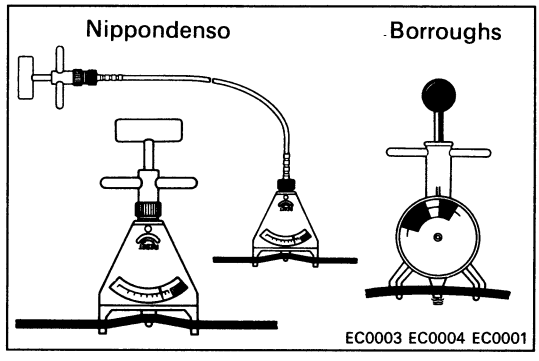

2. **INSPECT DRIVE BELT TENSION**

   Using a belt tension gauge, check the drive belt tension.

   Belt tension gauge:

   Nippondenso BTG-20 (95506-00020) or
   Borroughs No. BT-33-73F

   Drive belt tension:

   New belt 160±25 lb
   Used belt 100±20 lb

   HINT:

   - "New belt" refers to a belt which has been used less than 5 minutes on a running engine.
   - "Used belt" refers to a belt which has been used on a running engine for 5 minutes or more.
   - After installing the drive belt, check that it fits properly in the ribbed grooves.

REFRIGERATION LINES

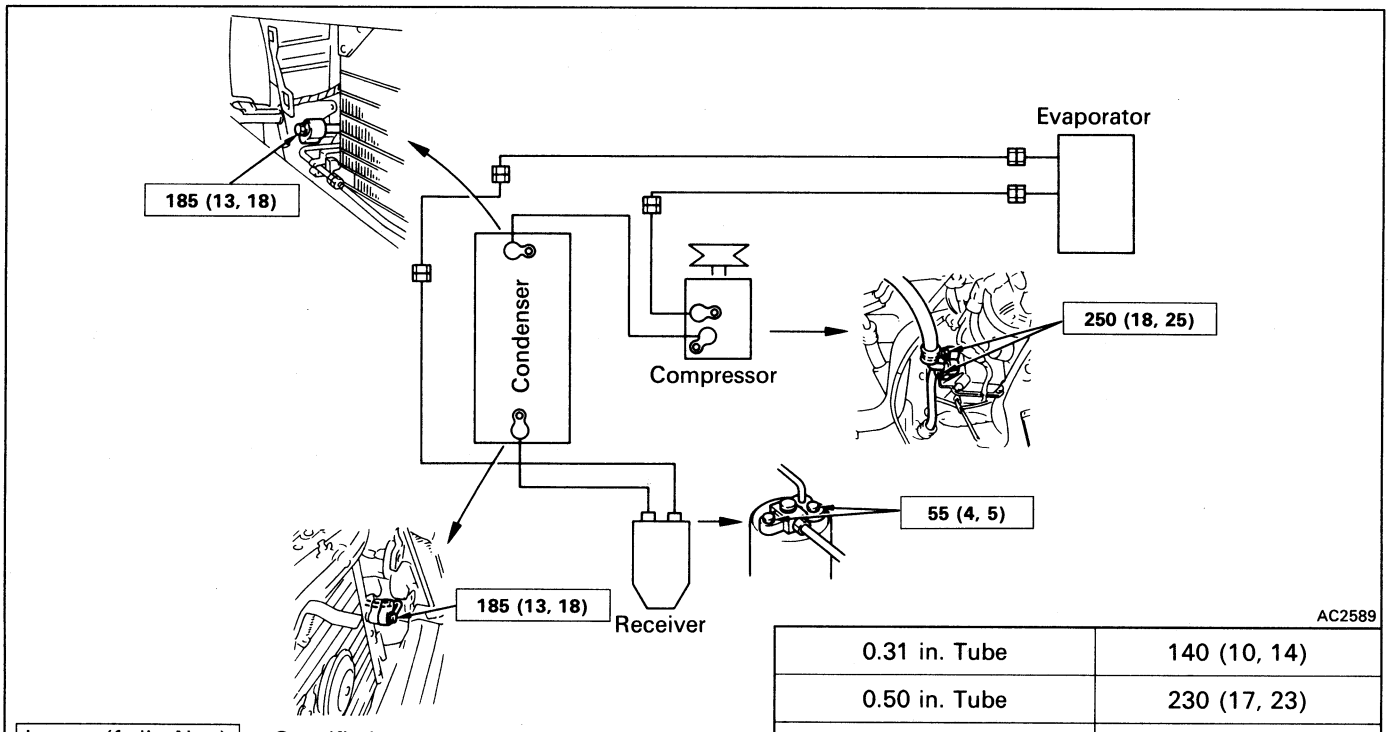

0.31 in. Tube	140 (10, 14)
0.50 in. Tube	230 (17, 23)
0.62 in. Tube	330 (24, 32)

kg-cm (ft-lb, N.m) : Specified torque

ON-VEHICLE INSPECTION

1. **INSPECT HOSE AND TUBE CONNECTIONS FOR LOOSENESS**

2. **INSPECT HOSES AND TUBES FOR LEAKAGE**

   Using a gas leak tester, check for leakage of refrigerant.

REPLACEMENT OF REFRIGERANT LINES

1. **DISCHARGE REFRIGERANT IN REFRIGERATION SYSTEM**

2. **REPLACE FAULTY TUBE OR HOSE**

   HINT: Cap the open fittings immediately to keep moisture or dirt out of the system.

3. **TORQUE CONNECTIONS TO SPECIFIED TORQUE**

   NOTICE: Connections should not be torqued tighter than the specified torque.

4. **EVACUATE AIR IN REFRIGERATION SYSTEM AND CHARGE WITH REFRIGERANT**

   Specified amount: 850 ± 50 g (29.98 ± 1.76 oz)

5. **INSPECT FOR LEAKAGE OF REFRIGERANT**

   Using a gas leak tester, check for leakage of refrigerant.

6. **INSPECT AIR CONDITIONER OPERATION**

COMPRESSOR

ON-VEHICLE INSPECTION (Magnetic Clutch)

INSPECT MAGNETIC CLUTCH FOR FOLLOWING

(a) Inspect the pressure plate and the rotor for signs of oil.

(b) Check the clutch bearings for noise and grease leakage.

(c) Connect the positive (+) lead from the battery to the terminal on the magnetic clutch connector and the negative (–) lead to the body ground.

(d) Check that the magnetic clutch is energized.

If the magnetic clutch is not energized, replace the magnetic clutch.

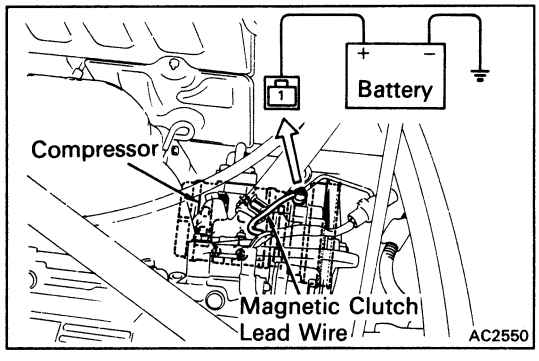

(Compressor)

1. **INSTALL MANIFOLD GAUGE SET**
   See page AC-13

2. **RUN ENGINE AT APPROX. 2,000 RPM**

3. **INSPECT COMPRESSOR FOR FOLLOWING**

   (a) High pressure gauge reading is not lower and low pressure gauge reading is not higher than normal.

   (b) Check that the metallic sound.

   (c) Check that the leakage from shaft seal.

   If defects are found, replace the compressor.

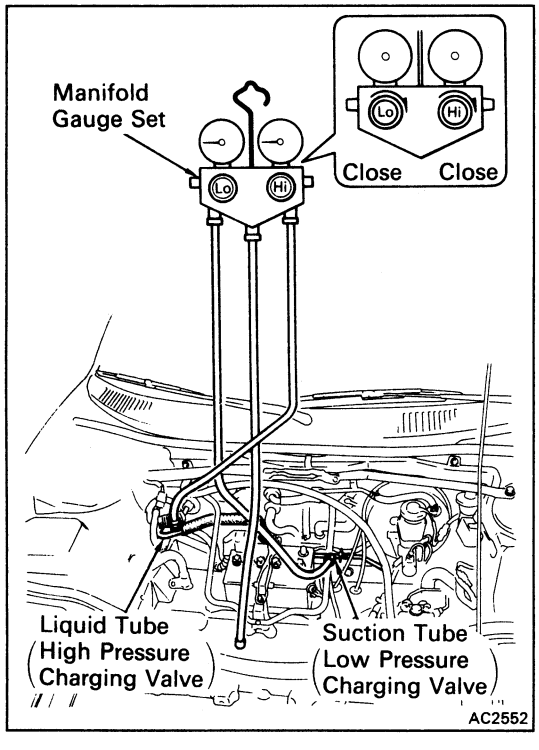

Removal of Compressor

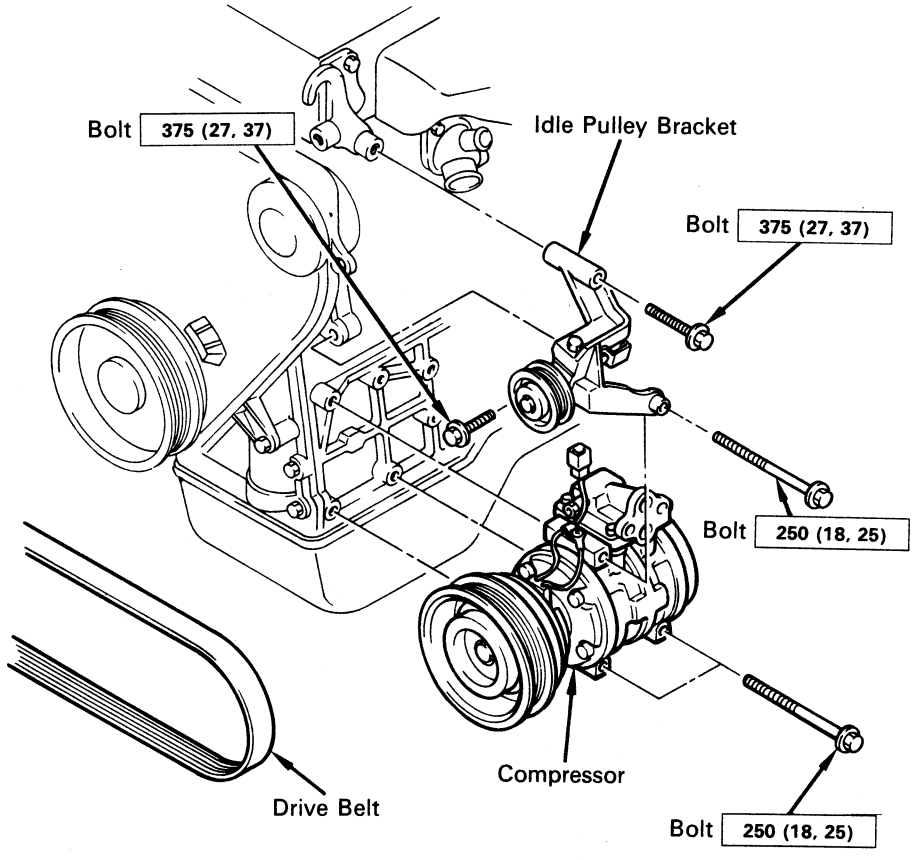

kg-cm (ft-lb, N·m) : Specified torque

AC2565

1. **RUN ENGINE AT IDLE SPEED WITH A/C ON FOR TEN MINUTES**
2. **STOP ENGINE**
3. **DISCONNECT NEGATIVE CABLE TO BATTERY**
4. **REMOVE UNDER COVER.**
5. **DISCONNECT CONNECTOR FROM MAGNETIC CLUTCH**
6. **DISCHARGE REFRIGERANT FROM REFRIGERATION SYSTEM**
7. **DISCONNECT TWO HOSES FROM COMPRESSOR SERVICE VALVES**

   HINT: Cap the open fitting immediately to keep moisture and dust out of the system.

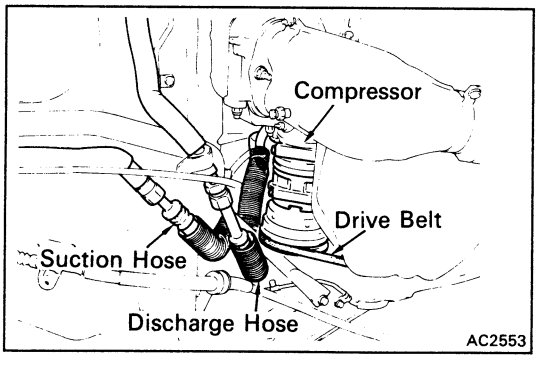

AC2553

8. **REMOVE COMPRESSOR**

(a) Loosen the drive belt.

(b) Remove the idle pulley bracket.

(c) Remove the compressor.

DISASSEMBLY OF MAGNETIC CLUTCH

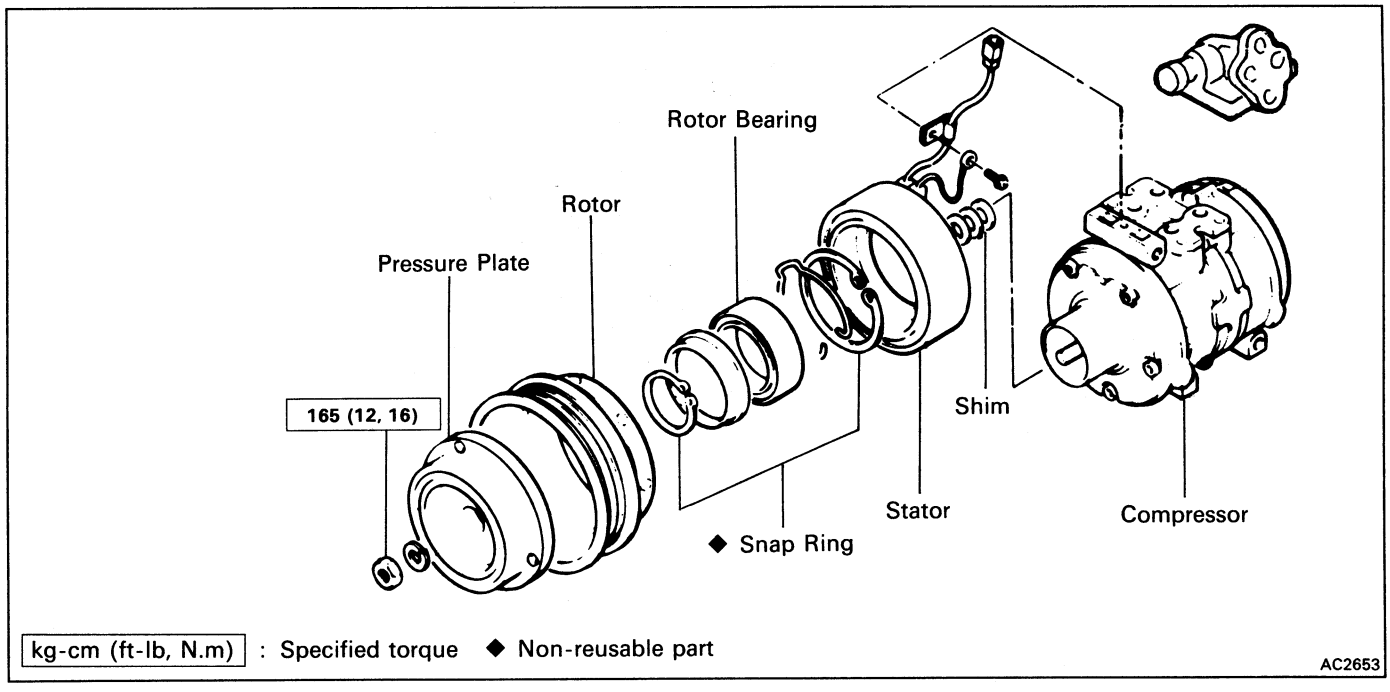

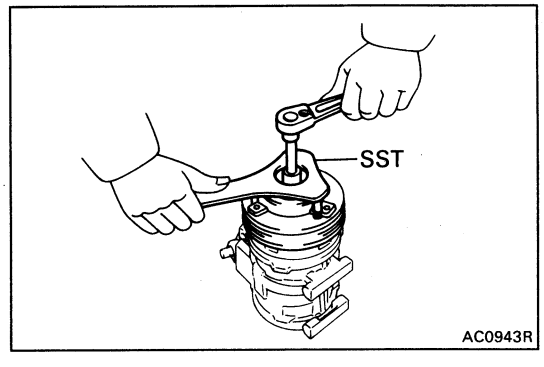

1. **REMOVE PRESSURE PLATE**

(a) Using SST and a socket, remove the shaft nut.
SST 07112-76040

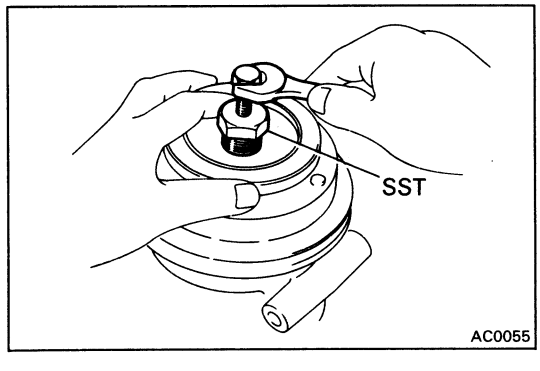

(b) Using SST and a socket, remove the pressure plate.
SST 07112-71010

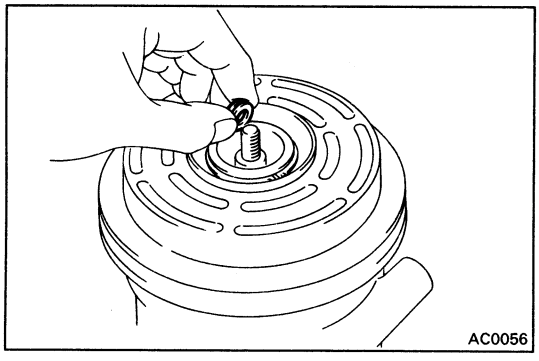

(c) Remove the shims from the shaft.

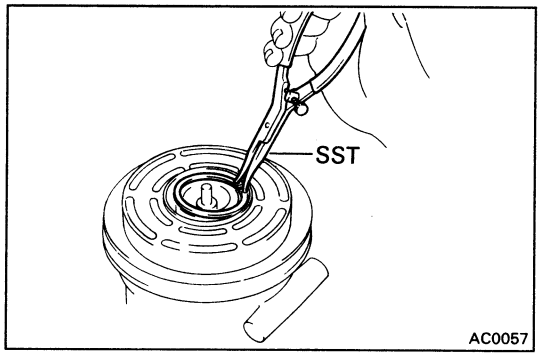

2. REMOVE ROTOR

(a) Using SST, remove the snap ring.

SST 07114-84020

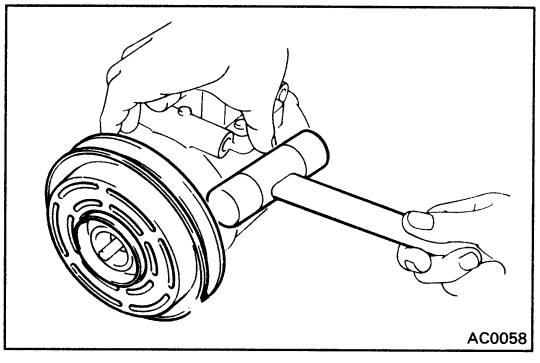

(b) Using a plastic hammer, tap the rotor off the shaft.

NOTICE: Be careful not to damage the pulley when tapping on the rotor.

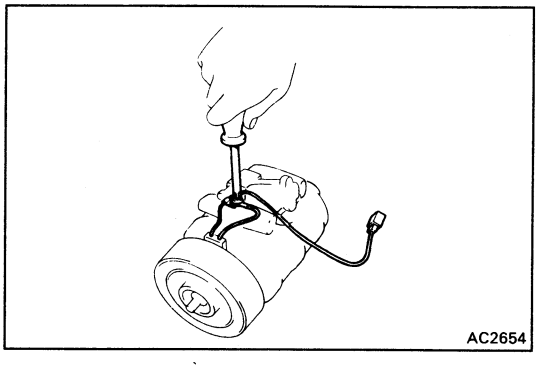

3. REMOVE STATOR

(a) Disconnect the stator lead wires from the compressor housing.

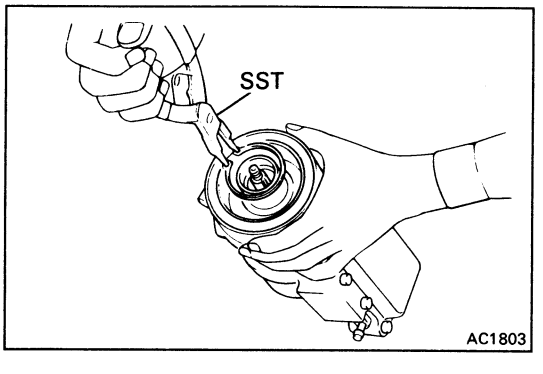

(b) Usint SST, remove the snap ring. Remove the stator.

SST 07114-84020

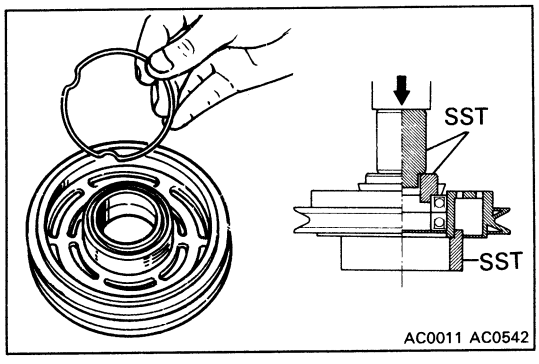

4. **REMOVE ROTOR BEARINGS**

HINT: Press out the bearings only if they are to be replace.

(a) Remove the bearing snap ring from the rotor.

(b) Using SST, press out the two bearings.

SST 07110-77011

5. **INSPECT PRESSURE PLATE AND ROTOR**

(a) Inspect the pressure plate and rotor surfaces for wear and scoring. Replace if necessary.

(b) Check the rotor bearings for wear and leakage of grease. Replace if necessary.

DISASSEMBLY OF COMPRESSOR

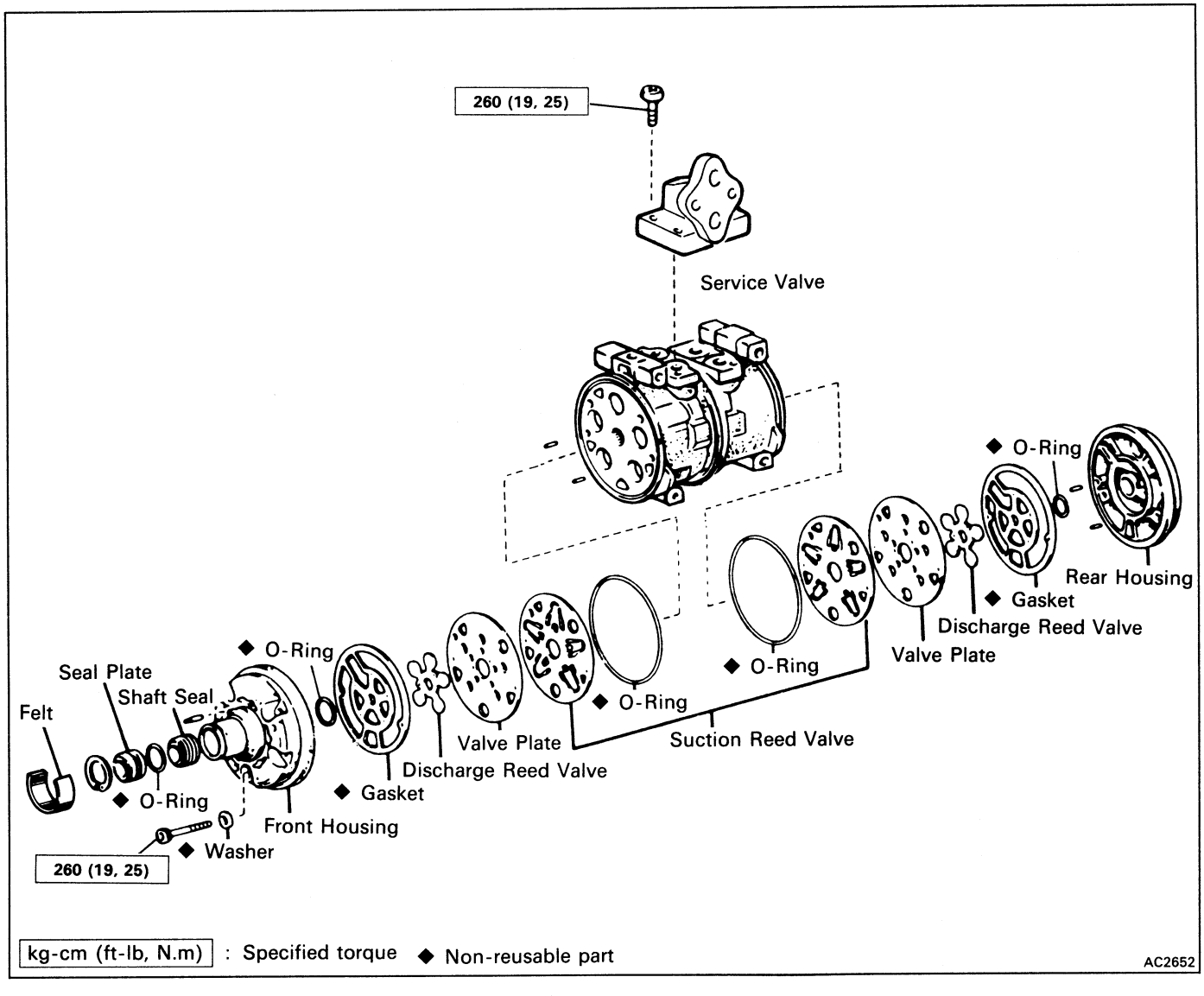

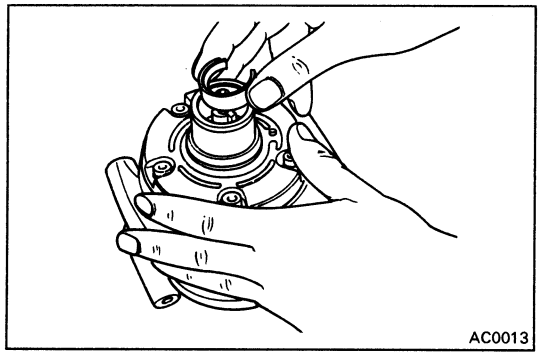

1. REMOVE FELT

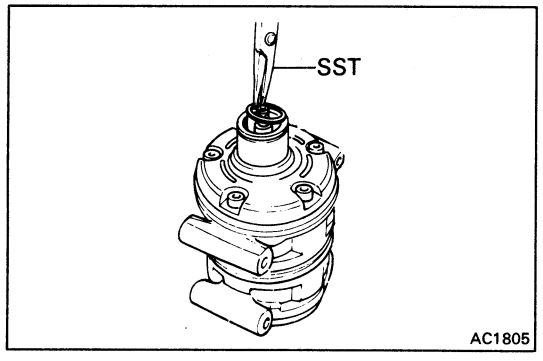

2. REMOVE SNAP RING

Using SST, remove the snap ring.

SST 07114-84020

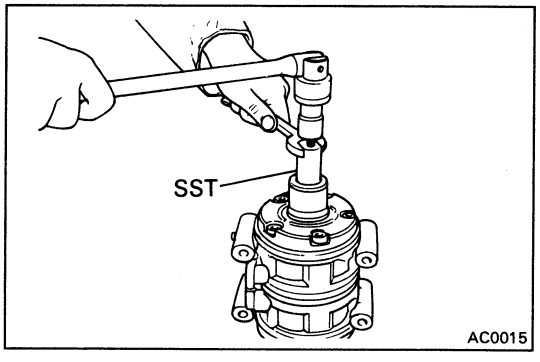

3. REMOVE KEY

Remove the key from the shaft.

SST 07112-45021

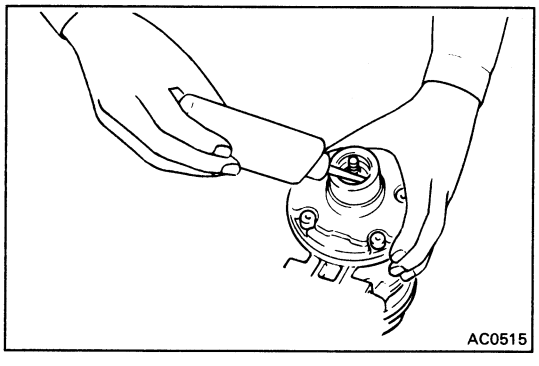

4. APPLY COMPRESSOR OIL TO INNER BORE

Apply compressor oil to the inner bore of the compressor.

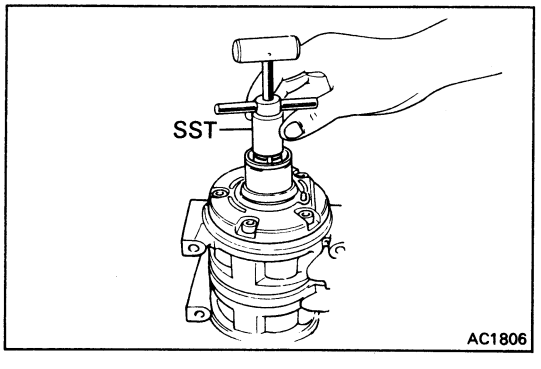

5. REMOVE SEAL PLATE

(a) Insert SST against the shaft. Then push the holder ring downward.

SST 07112-15010

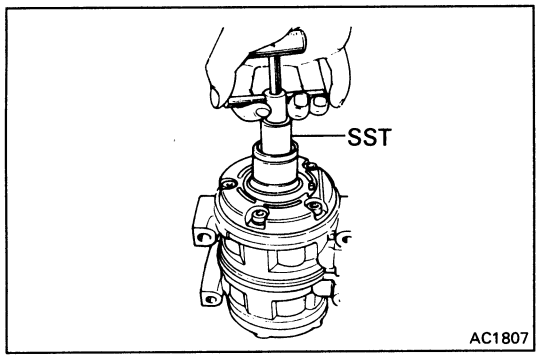

(b) Pull up the remover bar, and remove the seal plate.

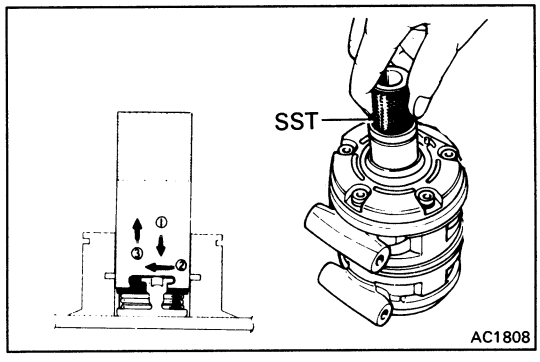

6. REMOVE SHAFT SEAL

Insert SST against the shaft, and turn it to the right while pressing on the remover.

Then remove the shaft seal.

SST 07114-15010

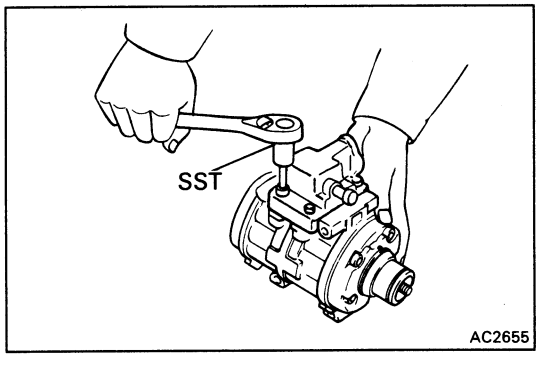

7. REMOVE SERVICE VALVE

(a) Using SST, remove the bolts holding the service valve.

SST 07110-61050

(b) Remove the O-ring from the service valve and discard them.

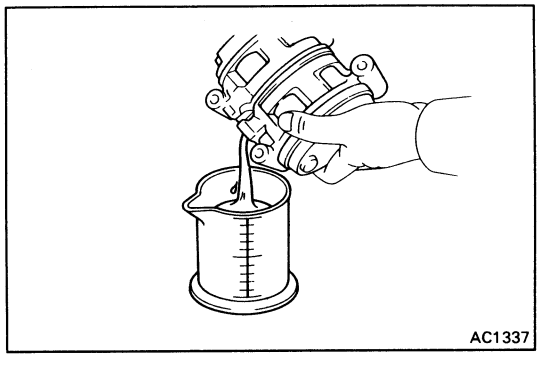

8. DRAIN COMPRESSOR OIL INTO MEASURING FLASK

Measure the quantity of drained oil because the same amount should be replaced later.

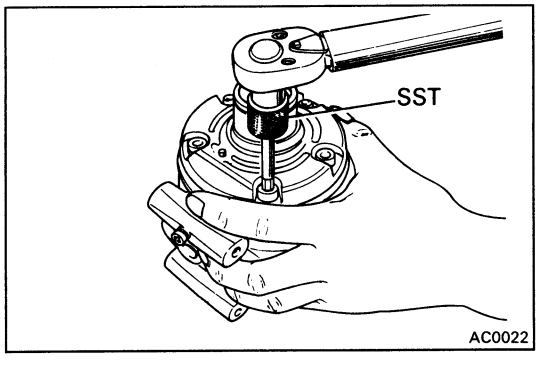

9. REMOVE FRONT HOUSING

(a) Using SST, remove the five through bolts.

HINT: Do not reuse the five washers.

SST 07110-61050

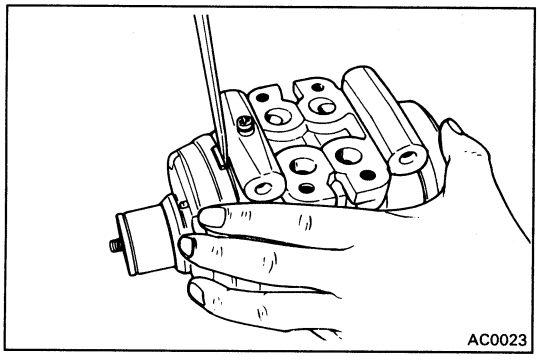

(b) Using a screwdriver, remove the front housing.

NOTICE: Be careful not to scratch the sealing surface of the front housing.

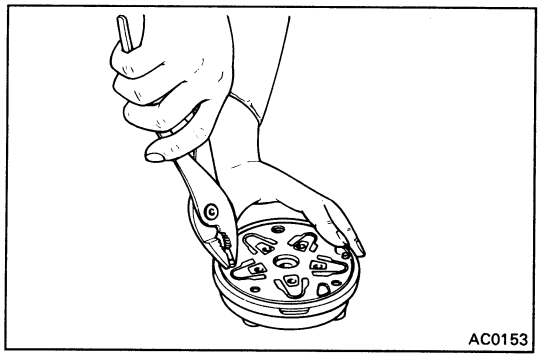

10. REMOVE FRONT VALVE PLATE

Remove the two pins from the front housing. Discard the pins.

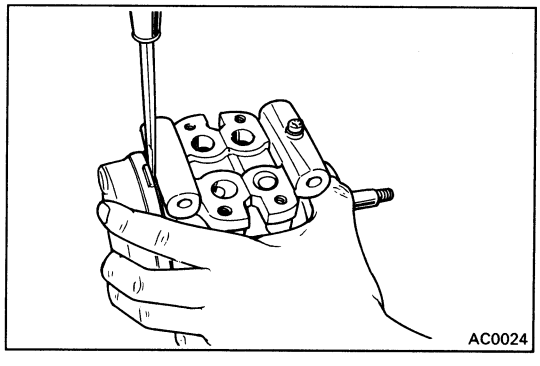

11. REMOVE REAR HOUSING

Using a screwdriver, remove the rear housing.

NOTICE: Be careful not to scratch the sealing surface of the rear housing.

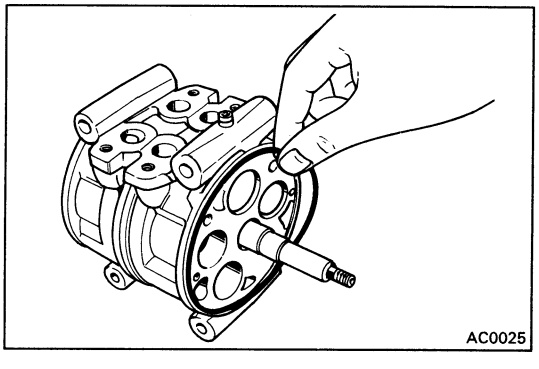

12. REMOVE FRONT AND REAR O-RINGS FROM CYLINDER BLOCK

Discard the O-rings.

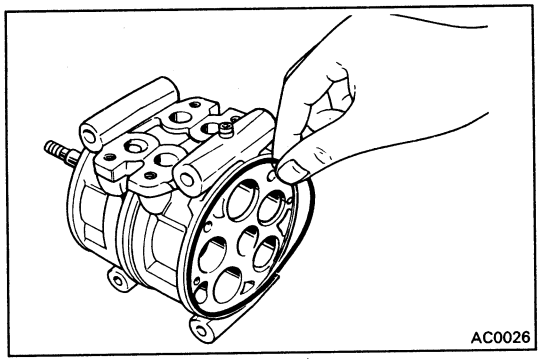
AC0026

ASSEMBLY OF COMPRESSOR

(See page AC-20)

1. INSTALL REAR VALVE PLATE ON REAR CYLINDER

(a) Install two pins in the rear cylinder.

(b) Lubricate a new O-ring with compressor oil. Install the O-ring in the rear cylinder.

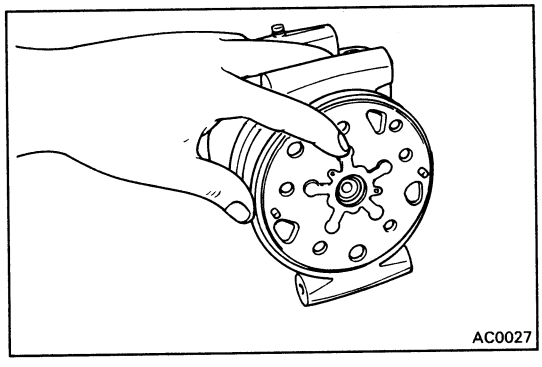
AC0027

(c) Install the rear suction valve over the pins on the rear cylinder.

HINT: The front and rear suction valves are identical.

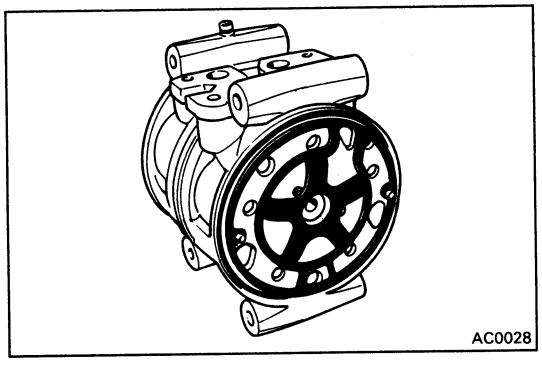
AC0028

(d) Install the rear valve plate together with the discharge valve over the pins on the rear cylinder.

HINT: The rear valve plate is marked with an "R".

(e) Lubricate the new gasket with compressor oil. Install the gasket on the valve plate.

2. INSTALL REAR HOUSING ON REAR CYLINDER

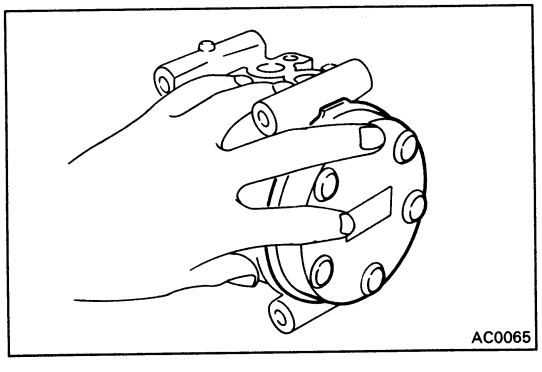
AC0065

3. INSTALL FRONT VALVE PLATE ON FRONT CYLINDER

(a) Install the two pins in the front cylinder.

(b) Lubricate a new O-ring with compressor oil. Install the O-ring in the front housing.

(c) Install the front suction valve over the pins on the front cylinder.

(d) Install the front valve plate together with the discharge valve over the pins on the front cylinder.

HINT: The front valve plate is marked with an "F".

(e) Lubricate the new gasket with compressor oil. Install the gasket on the valve plate.

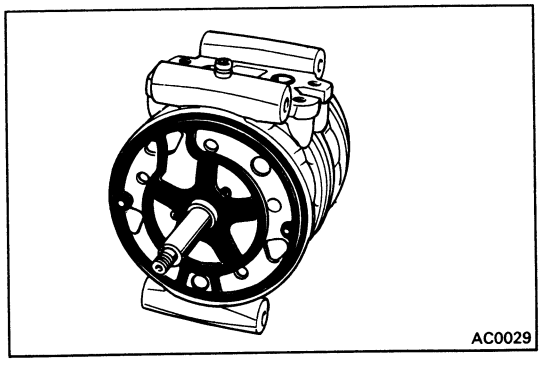
AC0029

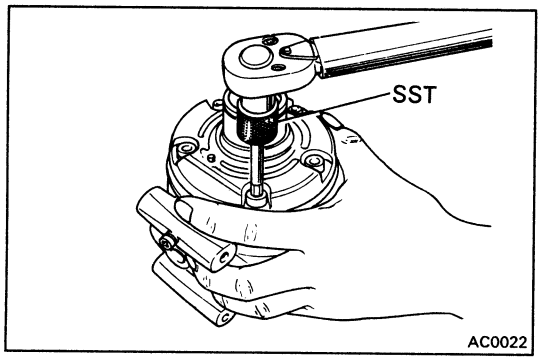

4. INSTALL FRONT HOUSING ON FRONT CYLINDER AND TIGHTEN FIVE THROUGH BOLTS

Using SST and torque wrench, gradually tighten the five through bolts in two or three passes.

SST 07110-61050

Torque: 260 kg-cm (19 ft-lb, 25 N.m)

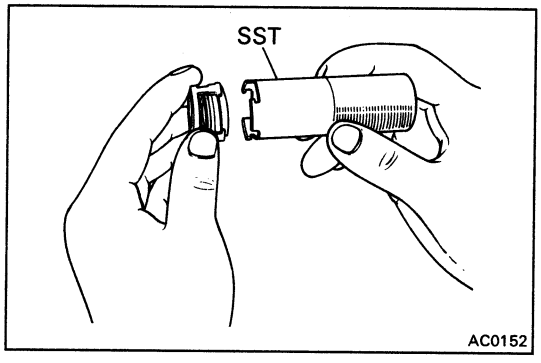

5. INSTALL SHAFT SEAL

(a) Fit the shaft seal onto SST.

SST 07114-15010

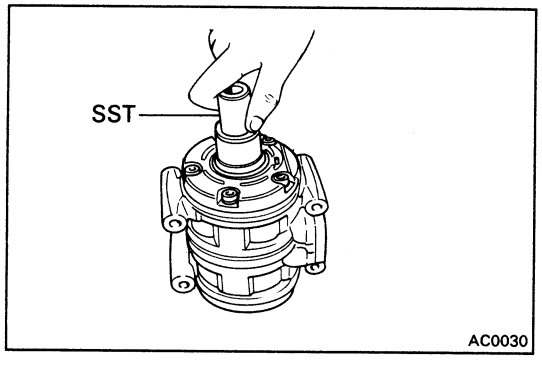

(b) Apply oil to the bore.

(c) Insert SST, and turn it counterclockwise while lightly pressing in.

(d) Then pull up the SST.

SST 07114-15010

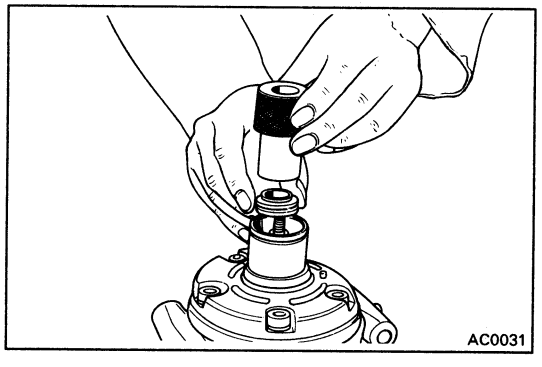

6. INSTALL SEAL PLATE

(a) Put in the seal plate.

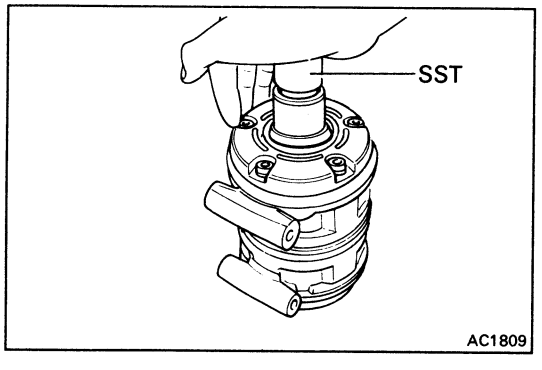

(b) Press in SST.

SST 07112-25010

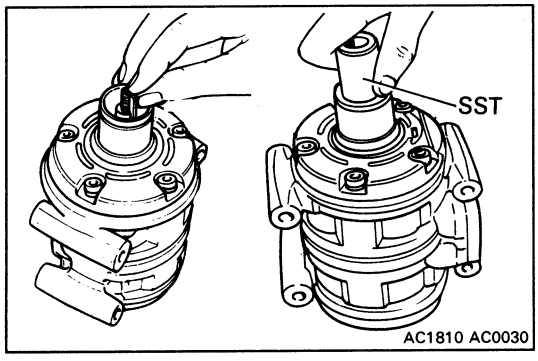

7. INSTALL KEY IN SHAFT GROOVE

Using SST and plastic hammer, tap the key lightly.

SST 07114-45010

Place the felt inside the bore.
(Refer to page AC-21)

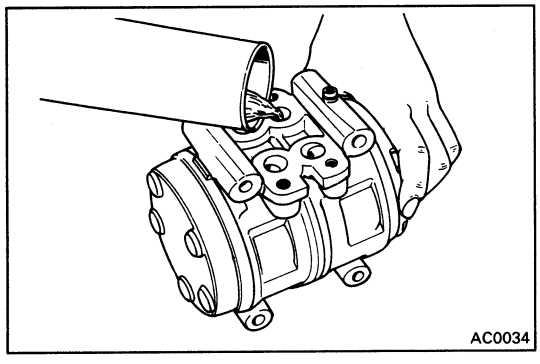

8. POUR COMPRESSOR OIL INTO COMPRESSOR

Add the same quantity of oil as was removed, plus 20 cc, into the compressor.

Compressor oil: DENSOOIL 6, SUNISO No.5GS or equivalent

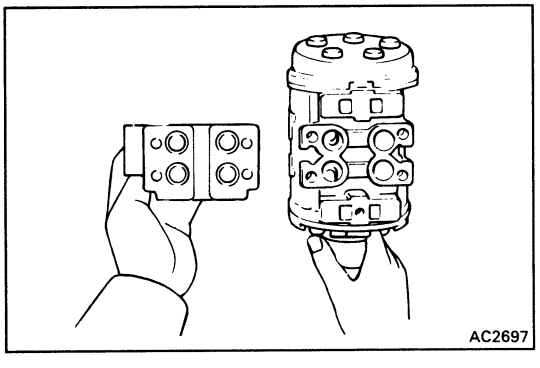

9. INSTALL SERVICE VALVE

(a) Lubricate new O-rings with compressor oil. Install the O-rings in the service valve.

(b) Install the service valve on the compressor. Using SST and torque wrench, tighten the bolts.

SST 07110-61050

Torque: 260 kg-cm (19 ft-lb, 25 N.m)

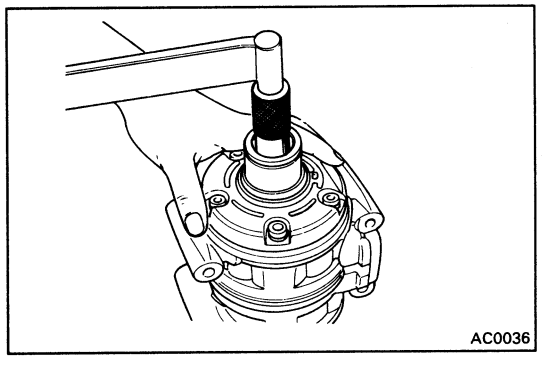

10. CHECK SHAFT STARTING TORQUE

Torque: 50 kg-cm (43 in.-lb, 4.9 N.m) or less

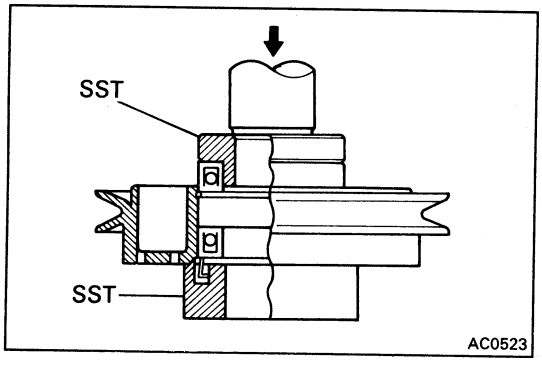

ASSEMBLY OF MAGNETIC CLUTCH

(See page AC-18)

1. INSTALL TWO BEARINGS IN ROTOR

(a) Using SST, press a shield ring and two new bearings into the rotor boss until fully seated.

SST 07110-77011

(b) Install the bearing snap ring into the rotor groove.

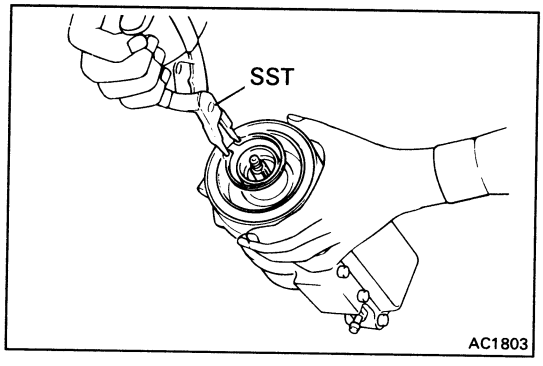

2. INSTALL STATOR

(a) Install the stator on the compressor.

(b) Using SST, install the new snap ring.

SST 07114-84020

(c) Connect the stator lead wires to the compressor housing.

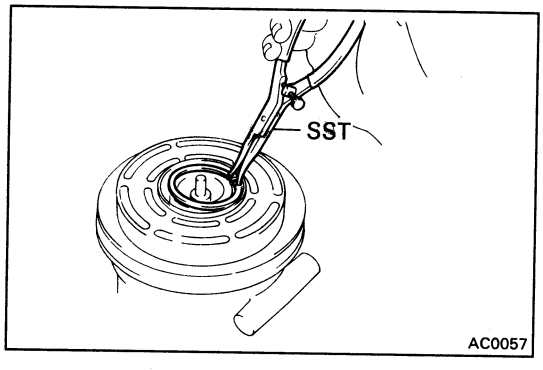

3. INSTALL ROTOR

(a) Install the rotor on the compressor shaft.

(b) Using SST, install the new snap ring.

SST 07114-84020

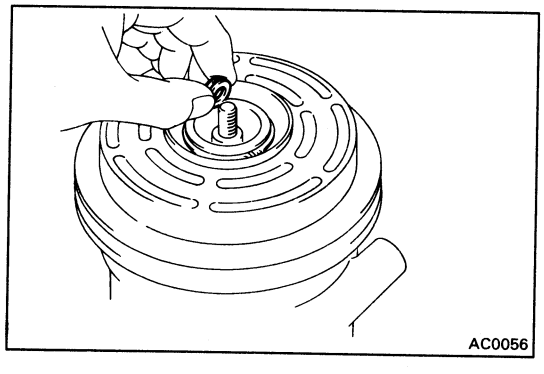

4. INSTALL PRESSURE PLATE

(a) Adjust the clearance between the pressure plate and rotor by installing shims on the compressor shaft.

Standard clearance: 0.8 ± 0.2 mm (0.32 ± 0.08 in.)

If the clearance is not within tolerance, change the number of shims to obtain the standard clearance.

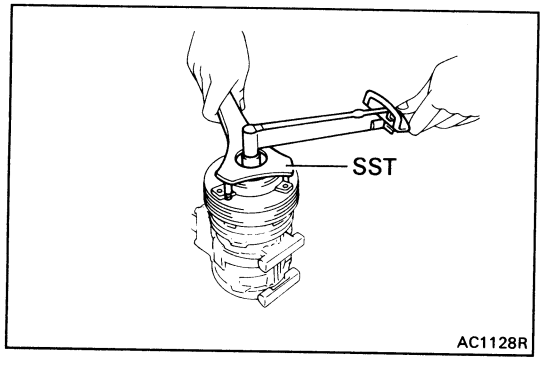

(b) Using SST and torque wrench, install the shaft nut.

SST 07112-76040

Torque: 200 kg-cm (14 ft-lb, 20 N.m)

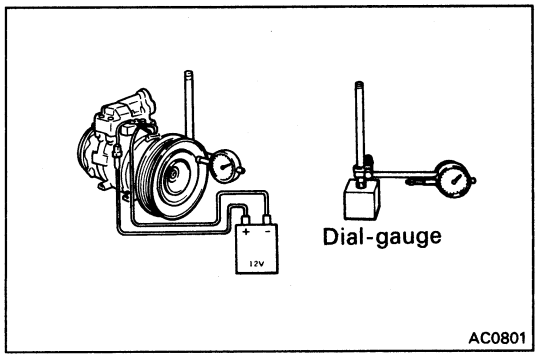

5. INSPECT CLEARANCE OF MAGNETIC CLUTCH

(a) Set the dial-gauge to the pressure plate of the magnetic clutch.

(b) Connect the magnetic clutch lead wire to the positive (+) terminal of the battery.

(c) Check the clearance between the pressure plate and rotor, when connect the negative (–) terminal of the battery.

Standard Clearance: 0.8 ± 0.2 mm (0.32 ± 0.08 in.)

If the clearance is not within standard clearance, adjust the clearance using shims to obtain the standard clearance.

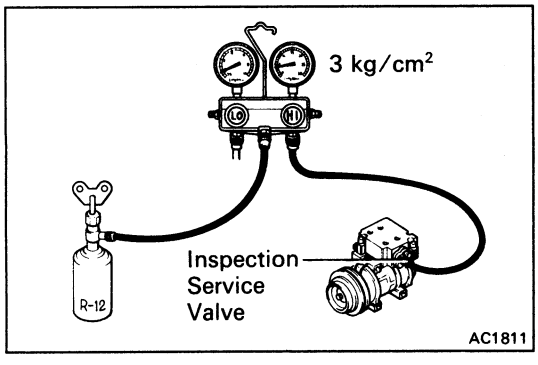

PERFORMANCE TEST OF COMPRESSOR

1. PERFORM GAS LEAKAGE TEST

(a) Install the inspection service valve on the service valve.

HINT: Use only a TOYOTA supplied inspection service valve to perform the gas leakage test.

Part No. Suction side 88376-17020
Discharge side 88376-22020

(b) Charge the compressor with refrigerant through the charge valve until the pressure is 3 kg/cm² (43 psi, 294 kPa).

(c) Using a gas leak detector, check the compressor for leaks.

If leaks are found, check and replace the compressor.

2. EVACUATE COMPRESSOR AND CHARGE WITH REFRIGERANT

Make sure the caps are tight and compressor is free from moisture and contamination.

HINT: When storing a compressor for an extended period, charge the compressor with refrigerant or dry nitrogen gas to prevent corrosion.

INSTALLATION OF COMPRESSOR

(See page AC-17)

1. INSTALL COMPRESSOR AND IDLE PULLEY BRACKET WITH FIVE BOLTS

   Torque:

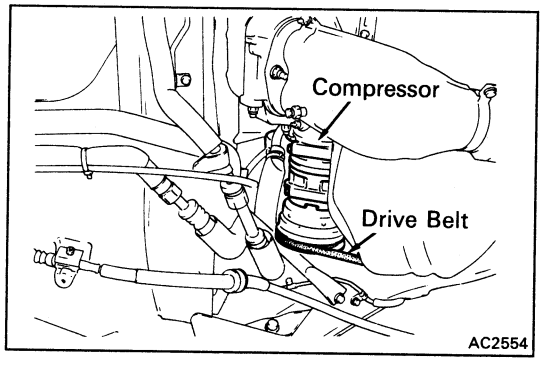

2. INSTALL DRIVE BELT
   See page AC-14

3. CONNECT TWO HOSES TO COMPRESSOR

   Torque:

Discharge line	250 kg-cm (18 ft-lb, 25 N·m)
Suction line	250 kg-cm (18 ft-lb, 25 N·m)

4. CONNECT CLUTCH LEAD WIRE TO WIRING HARNESS

5.

6. CONNECT CABLES TO BATTERY

7. EVACUATE AIR FROM AIR CONDITIONING SYSTEM

8. CHARGE AIR CONDITIONING SYSTEM WITH REFRIGERANT AND CHECK FOR GAS LEAKAGE

   Specified amount: 850 ± 50 g (29.98 ± 1.76 oz)

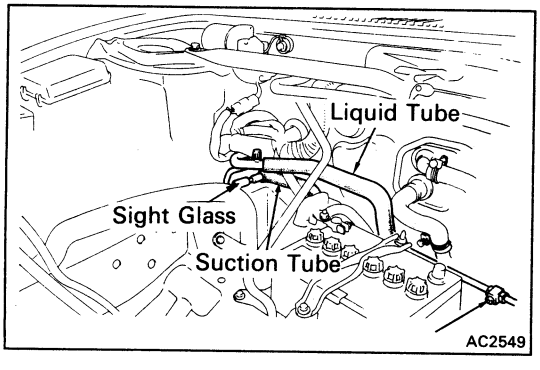

RECEIVER

ON-VEHICLE INSPECTION

INSPECT SIGHT GLASS, FUSIBLE PLUG AND FITTINGS FOR LEAKAGE

Use a gas leak tester. Repair as necessary.

REMOVAL OF RECEIVER

1. DISCHARGE REFRIGERANT FROM REFRIGERATION SYSTEM

2. REMOVE LEFT SIDE FRONT FENDER LINER AND UNDER COVER

3. DISCONNECT TWO LIQUID TUBES FROM RECEIVER

   HINT: Cap the open fittings immediately to keep moisture out of the system.

4. REMOVE RECEIVER FROM RECEIVER HOLDER

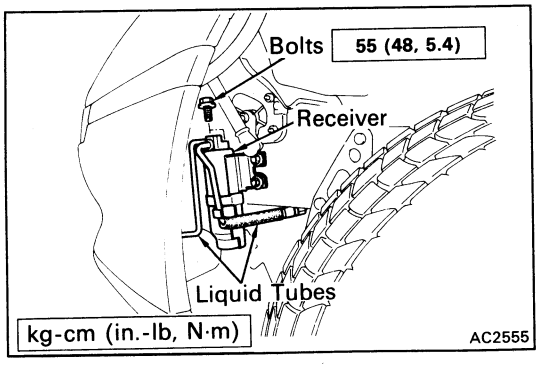

INSTALLATION OF RECEIVER

1. **INSTALL RECEIVER IN RECEIVER HOLDER**

   HINT: Do not remove the blind plugs until ready for connection.

2. **CONNECT TWO LIQUID TUBES TO RECEIVER**

   Torque: 55 kg-cm (48 in.-lb, 5.4 N·m)

3. **REINSTALL FENDER LINER AND UNDER COVER.**

4. **IF RECEIVER WAS REPLACED, ADD COMPRESSOR OIL TO COMPRESSOR**

   Add 20 cc (0.7 fl.oz.)

   Compressor oil: DENSOOIL 6, SUNISO NO.5GS or equivalent

5. **EVACUATE AIR FROM REFRIGERATION SYSTEM**

6. **CHARGE SYSTEM WITH REFRIGERANT AND INSPECT FOR LEAKAGE OF REFRIGERANT**

   Specified amount: 850 ± 50 g (29.98 ± 1.76 oz)

CONDENSER

ON-VEHICLE INSPECTION

1. **INSPECT CONDENSER FINS FOR BLOCKAGE OR DAMAGE**

   If the fins are clogged, wash them with water and dry with compressed air.

   NOTICE: Be careful not to damage the fins.

   If the fins are bent, straighten them with a screwdriver or pliers.

2. **INSPECT CONDENSER FITTINGS FOR LEAKAGE**

   Repair as necessary.

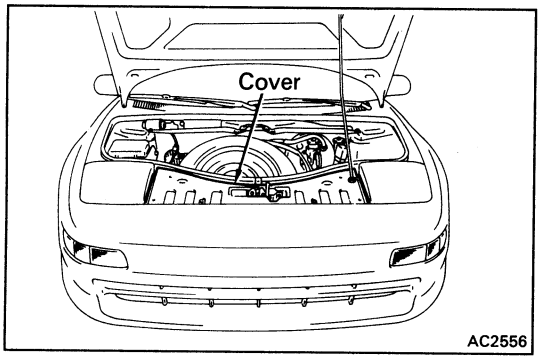

REMOVAL OF CONDENSOR

1. **DISCHARGE REFRIGERANT FROM REFRIGERATION SYSTEM**

2. **REMOVE COVER AND TWO BRACKETS WITH FOUR BOLTS**

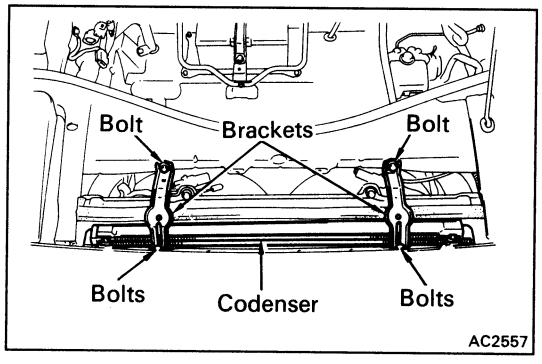

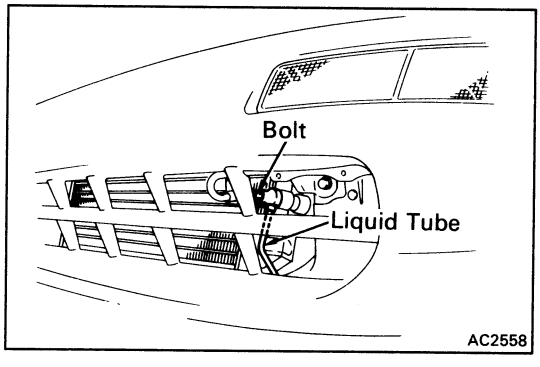

3. **DISCONNECT LIQUID TUBE AND DISCHARGE TUBE FROM CONDENSER FITTINGS**

   HINT: Cap the open fittings immediately to keep moisture out of the system.

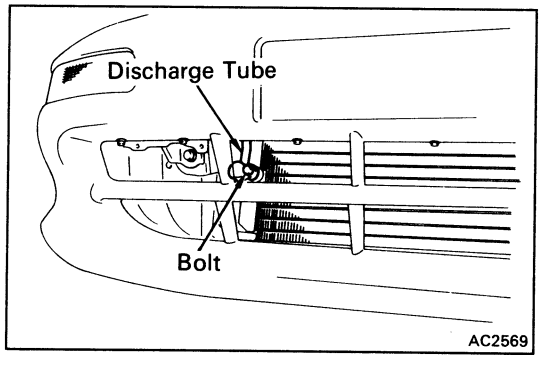

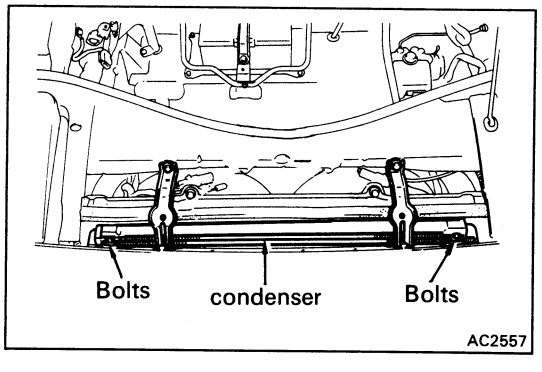

4. **REMOVE CONDENSER**

   (a) Remove the two bolts.

   (b) Pull out the condenser between the radiator and the body.

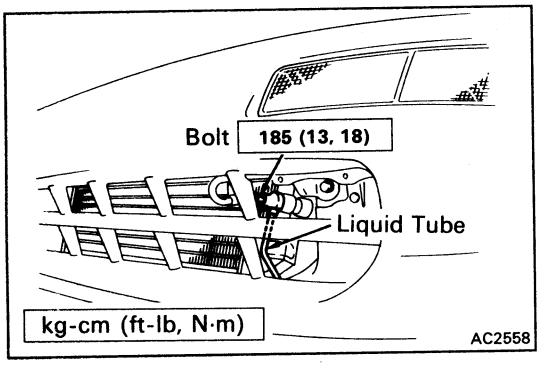

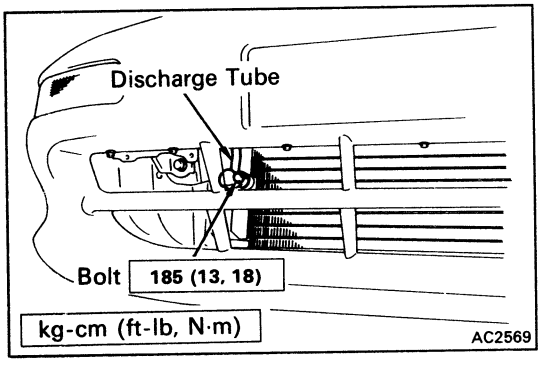

INSTALLATION OF CONDENSER

1. **INSTALL CONDENSER**

   Install the brackets and bolts, making sure the rubber cushions fit on the mounting flanges correctly.

2. **CONNECT LIQUID TUBE AND DISCHARGE TUBE TO CONDENSER**

   Torque: 185 kg-cm (13 ft-lb, 18 N·m)

3. **REINSTALL TWO BRACKETS WITH FOUR BOLTS AND COVER**

4. **IF CONDENSER WAS REPLACED, ADD COMPRESSOR OIL TO COMPRESSOR**

   Add 40 – 50 cc (1.4 – 1.8 fl.oz.)

   Compressor oil: DENSOOIL 6, SUNISO NO.5GS or equivalent

5. **EVACUATE AIR FROM AIR CONDITIONING SYSTEM**

6. **CHARGE SYSTEM WITH REFRIGERANT AND INSPECT FOR LEAKAGE OF REFRIGERANT**

   Specified amount: 850 ±50 g (29.98 ± 1.76 oz)

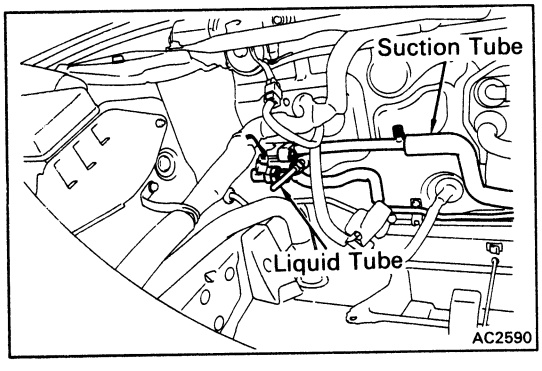

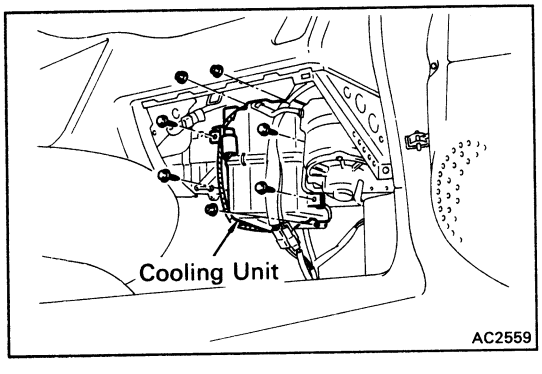

COOLING UNIT

REMOVAL OF COOLING UNIT

1. **DISCONNECT NEGATIVE CABLE FROM BATTERY**

2. **DISCHARGE REFRIGERANT FROM REFRIGERATION SYSTEM**

3. **DISCONNECT SUCTION TUBE FROM COOLING UNIT OUTLET FITTING**

4. **DISCONNECT LIQUID TUBE FROM COOLING UNIT INLET FITTING**

   HINT: Cap the open fittings immediately to keep moisture out of the system.

5. **REMOVE GLOVE BOX**

6. **DISCONNECT CONNECTORS**

7. **REMOVE COOLING UNIT**

   Remove the three nuts and four bolts and the cooling unit.

DISASSEMBLY OF COOLING UNIT

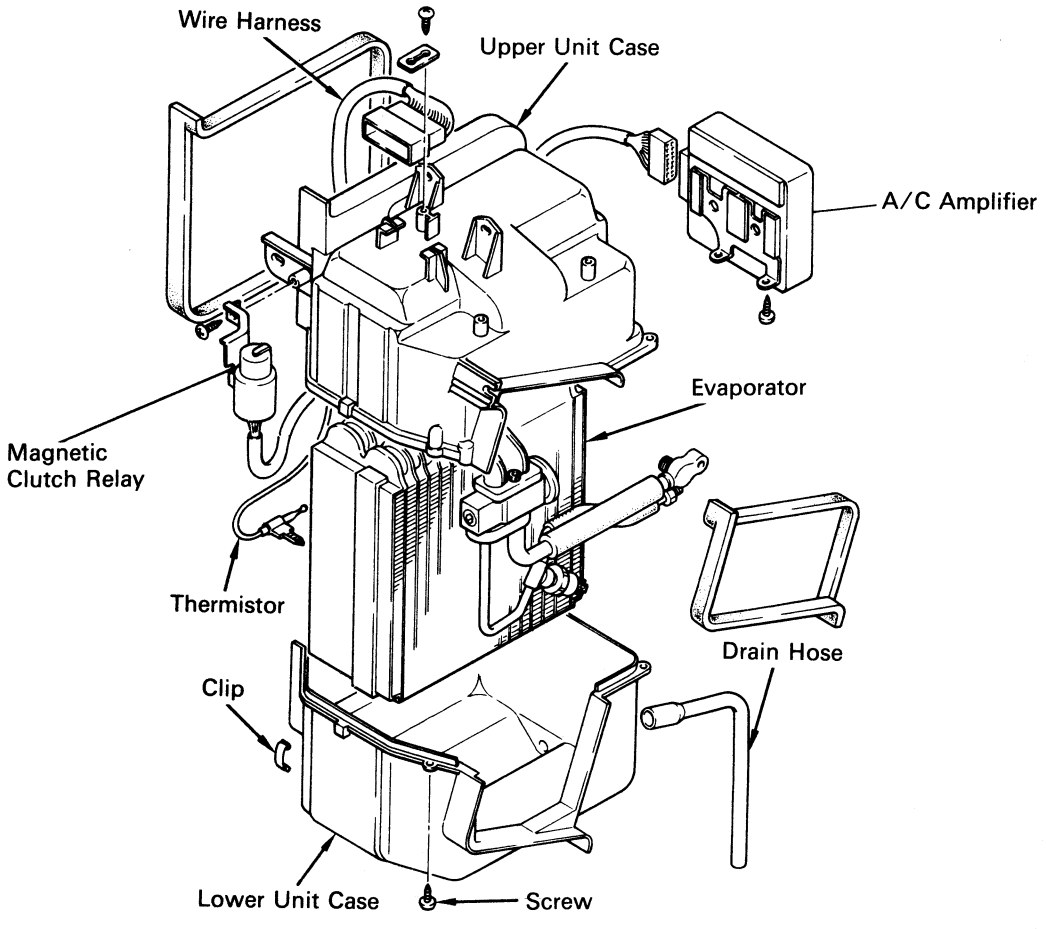

1. **REMOVE MAGNETIC CLUTCH RERAY**
2. **REMOVE A/C AMPLIFIER**
3. **REMOVE UPPER UNIT CASE**
   (a) Disconnect the connectors.
   (b) Remove the wire harness.
   (c) Remove the two clips.
   (d) Remove the four screws.
   (e) Remove the upper unit case.
4. **REMOVE EVAPORATOR FROM LOWER UNIT CASE**
5. **REMOVE THERMISTOR FROM EVAPORATOR**
   Remove the thermistor with the thermistor holder.

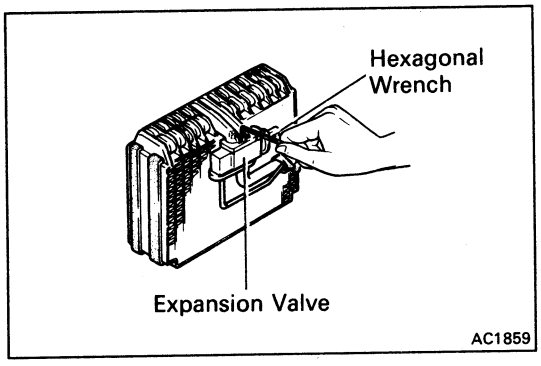

6. REMOVE EXPANSION VALVE FROM EVAPORATOR

(a) Remove the packing and heat sensing tube from suction and liquid tubes.

(b) Remove the expansion valve from the evaporator.

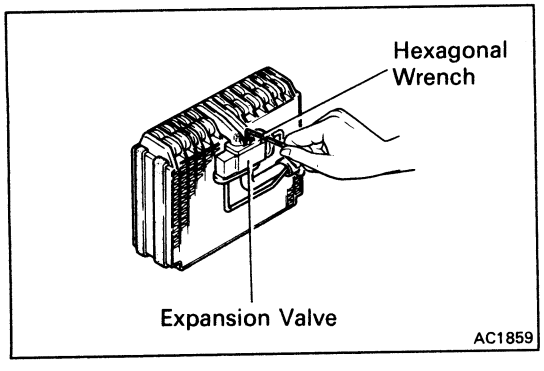

ASSEMBLY OF COOLING UNIT

INSTALL COMPONENTS ON EVAPORATOR

(a) Connect the expansion valve, suction and liquid tubes to the evaporator. Torque the bolt.

Torque: 55 kg-cm (48 in.-lb, 5.4 N·m)

HINT: Be sure that the O-rings are positioned on the tube fitting.

(b) Install the holder to the suction and liquid tubes with heat sensing tube.

(c) Install the lower unit case to the evaporator.

(d) Install the thermistor to the evaporator.

(e) Install the upper unit case.

(f) Install the four screws.

(g) Install three clips.

(h) Install the connector of thermistor.

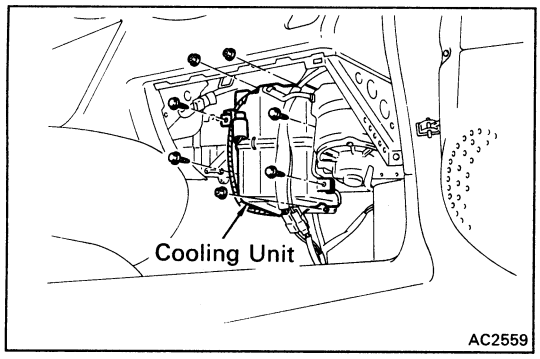

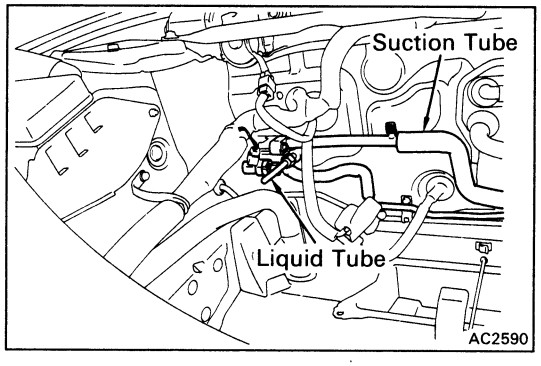

INSTALLATION OF COOLING UNIT

1. **INSTALL COOLING UNIT**

   Install the cooling unit with the three nuts and four bolts.

2. **CONNECT CONNECTORS**

3. **INSTALL GLOVE BOX REINFORCEMENT**

4. **CONNECT LIQUID TUBE TO COOLING UNIT INLET FITTING**

   Torque the nut.

   Torque: 140 kg-cm (10 ft-lb, 14 N·m)

5. **CONNECT SUCTION TUBE TO COOLING UNIT OUTLET FITTING**

   Torque the nut.

   Torque: 330 kg-cm (24 ft-lb, 32 N·m)

6. **IF EVAPORATOR WAS REPLACED, ADD COMPRESSOR OIL TO COMPRESSOR**

   Add 40 – 50 cc (1.4 – 1.7 fl.oz.)

   Compressor oil: DENSOOIL 6, SUNISO NO.5GS OR equivalent

7. **CONNECT NEGATIVE CABLE TO BATTERY**

8. **EVACUATE AIR FROM REFRIGERATION SYSTEM**

9. **CHARGE SYSTEM WITH REFRIGERANT AND INSPECT FOR LEAKAGE OF REFRIGERANT**

   Specified amount: 850 ± 50 g (29.98 ± 1.76 oz)

EVAPORATOR

REMOVAL OF EVAPORATOR

See Disassembly of Cooling Unit on page AC-30.

INSPECTION OF EVAPORATOR

1. **INSPECT EVAPORATOR FINS FOR BLOCKAGE**
   If the fins are clogged, clean them with compressed air.
   NOTICE: Never use water to clean the evaporator.
2. **INSPECT FITTINGS FOR CRACKS OR SCRATCHES**
   Repair as necessary.

INSTALLATION OF EVAPORATOR

See Assembly of Cooling Unit on page AC-32.

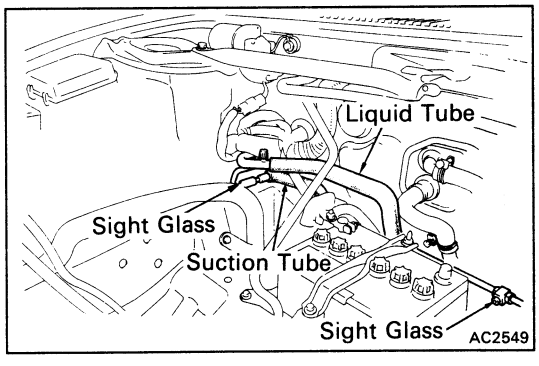

EXPANSION VALVE

ON-VEHICLE INSPECTION

1. **INSPECT REFRIGERANT VOLUME**
   See page AC-12.
2. **INSTALL MANIFOLD GAUGE SET**
   See page AC-13.
3. **A/C SWITCH ON AND BLOWER SWITCH TO HI**
4. **RUN ENGINE AT APPROX, 2,000 RPM**
   Run the engine at 2,000 rpm for at least 5 minutes.
5. **INSPECT EXPANSION VALVE**
   If the expansion valve is clogged, the low pressure reading will drop to 0 kg-cm^2 (0psi, 0kpa), otherwise it is OK.

REMOVAL OF EXPANSION VALVE

See Disassembly of Cooling Unit on page AC-30.

INSTALLATION OF EXPANSION VALVE

See Assembly of Cooling Unit on page AC-32.

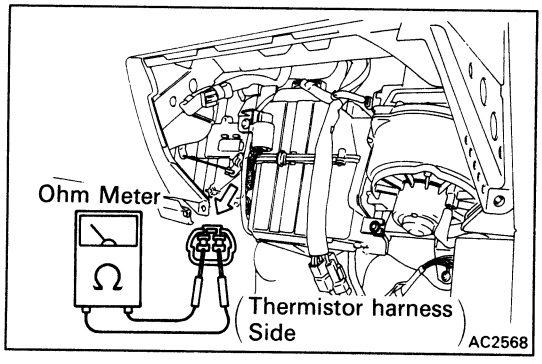

THERMISTOR

ON-VEHICLE INSPECTION

1. **DISCONNECT NEGATIVE BATTERY CABLE**
2. **REMOVE GLOVE BOX**
3. **CHECK RESISTANCE OF THERMISTOR**

Measure the resistance between terminals.

Standard resistance: 1,500 Ω at 25°C (77°F)

If resistance value is not as specified, replace the thermistor.

REMOVAL OF THERMISTOR

See Disassembly of Cooling Unit on page AC-30.

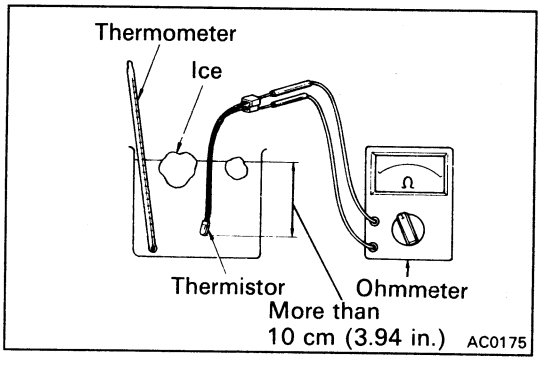

INSPECTION OF THERMISTOR

INSPECT THERMISTOR OPERATION

(a) Place the thermistor in cold water. While varying the temperature of the water, measure the resistance at the connector and at the same time, measure the temperature of the water with a thermometer.

(b) Compare the two readings on the chart.

If the intersection is not between the two lines, replace the thermistor.

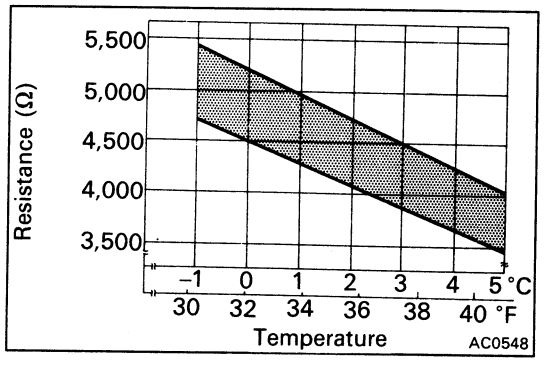

INSTALLATION OF THERMISTOR

See Assembly of Cooling Unit on page AC-32.

A/C CONTROL ASSEMBLY

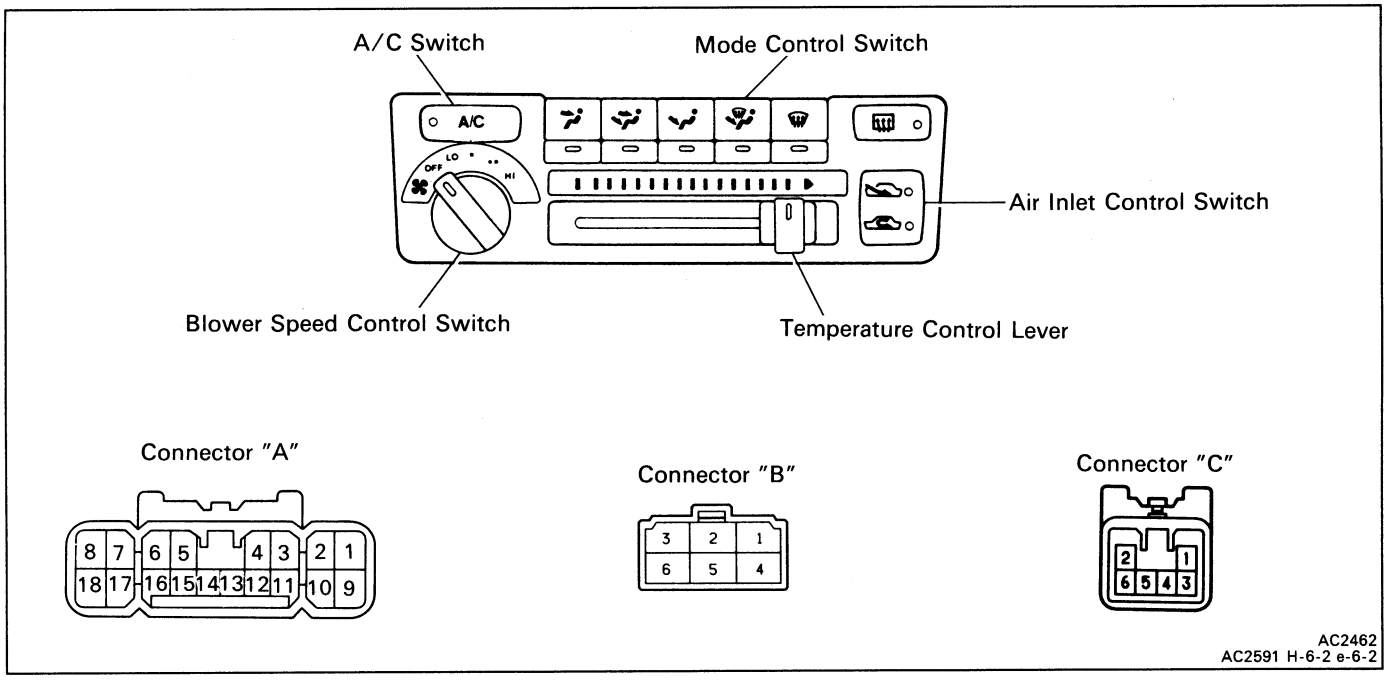

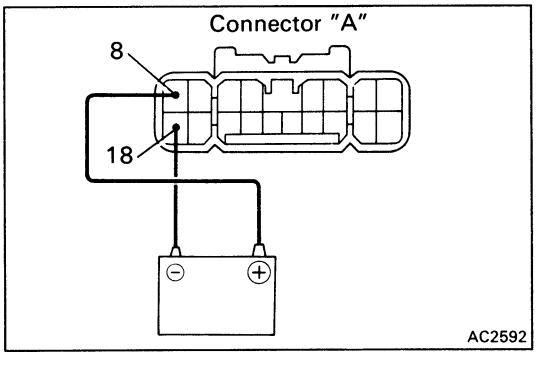

Illuminations (Except A/C Switch)

INSPECTION OF ILLUMINATION

1. **INSPECT ILLUMINATION**

Connect the positive (+) lead from the battery to terminal A-18 and the negative (–) lead to terminal A-8, then check that the illuminations light up.

If illuminations do not light up, test the bulb.

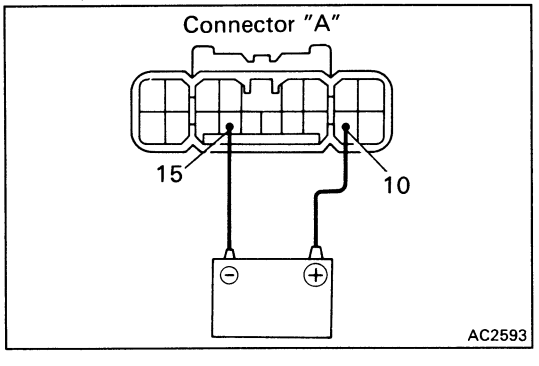

Air Inlet Control Switch

INSPECTION OF AIR INLET CONTROL SWITCH

1. **INSPECT INDICATOR**

(a) Connect the positive (+) lead from the battery to terminal A-10 and the negative (–) lead to terminal A-15.

(b) Check that the FRESH and RECIRC indicators light up alternately each time the air inlet control switch button is pressed.

(c) Then, connect the positive (+) lead from the battery to terminal A-3 and check that the indicator dims.

If indicators operation is not as specified, replace the A/C control assembly.

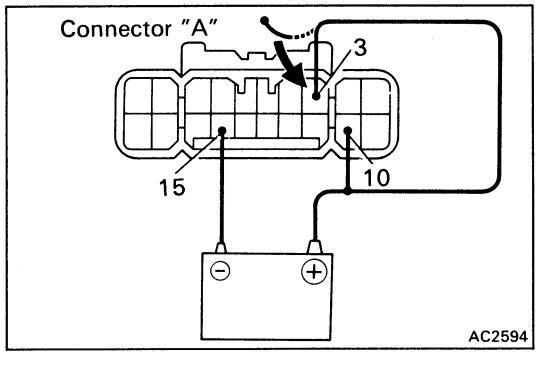

2. INSPECT SWITCH CONTINUITY

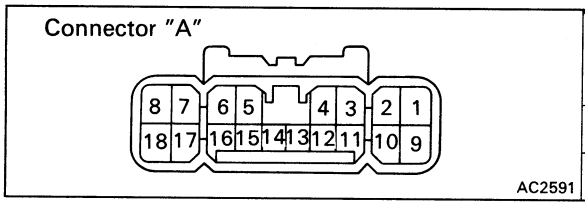

Terminal / Switch position	A-1	A-9	A-15
FRESH (Free)	○	▶	○
RECIRC (Pushed in)		○ ▶	○

If continuity is not as specified, replace the A/C control assembly.

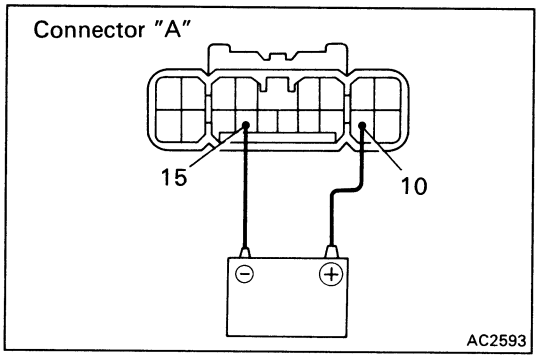

Mode Control Switch

INSPECTION OF MODE CONTROL SWITCH

1. INSPECT INDICATOR

(a) Connect the positive (+) lead from the battery to terminal A-10 and the negative (–) lead to terminal A-15.

(b) Push each of the mode control switch buttons in and check that their indicators light up.

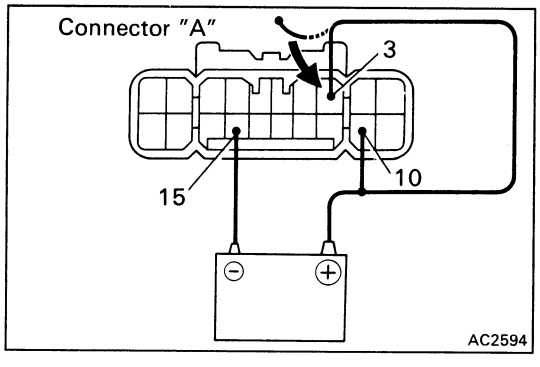

(c) Then, connect the positive (+) lead from the battery to terminal A-3 and check that the indicator dims.

If indicators operation is not as specified, replace the A/C control assembly.

2. INSPECT SWITCH CONTINUITY

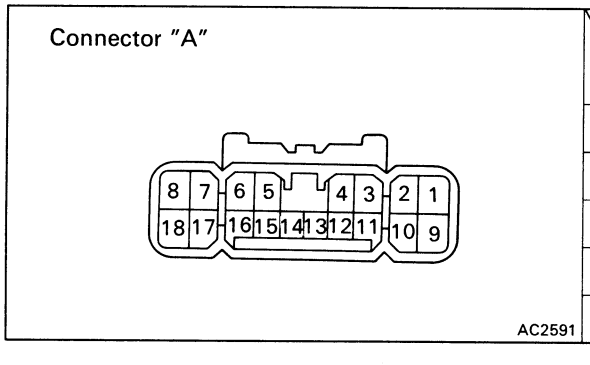

Terminal / Switch position	A-4	A-5	A-12	A-13	A-14	A-15
FACE			○			○
B/L				○		○
FOOT	○					○
FOOT/DEF		○				○
DEF					○	○

If continuity is not as specified, replace the A/C control assembly.

Blower Speed Control Switch

INSPECTION OF BLOWER SPEED CONTROL SWITCH

INSPECT SWITCH CONTINUITY

Connector "B"

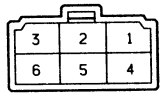

H-6-2

Terminal / Switch position	B-1	B-2	B-3	B-4	B-6
OFF					
LO				○	○
■	○			○	○
■ ■		○		○	○
HI			○	○	○

If continuity is not as specified, replace the blower speed control switch.

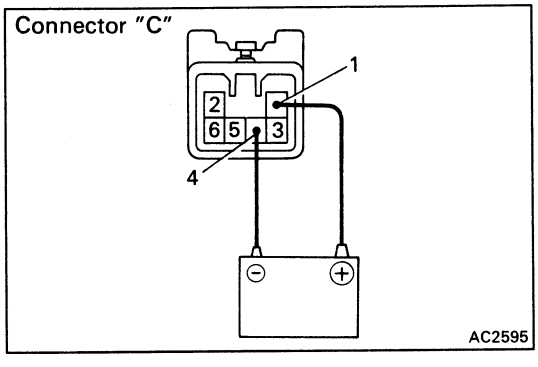

A/C Switch

INSPECTION OF A/C SWITCH

1. INSPECT ILLUMINATION

Connect the positive (+) lead from the battery to terminal C-1 and the negative (–) lead to terminal C-4, then check that the illumination lights up.

If illumination does not light up, test the bulb.

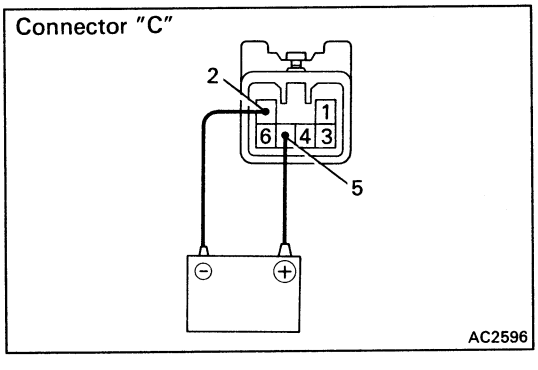

2. INSPECT INDICATOR

(a) Connect the positive (+) lead from the battery to terminal C-5 and the negative (–) lead to terminal C-2.

(b) Push the A/C switch button in and check that the indicator lights up.

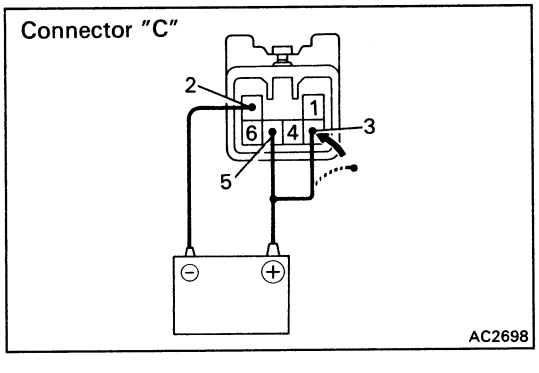

(c) Then, connect the positive (+) lead from the battery to terminal C-3 and check that the indicator dims.

If indicators operation is not as specified, replace the A/C switch.

3. INSPECT SWITCH CONTINUITY

Connector "C"

e-6-2

Terminal / Switch position	C-3	C-5	C-6
OFF			
A/C		○——○	

If continuity is not as specified, replace the A/C switch.

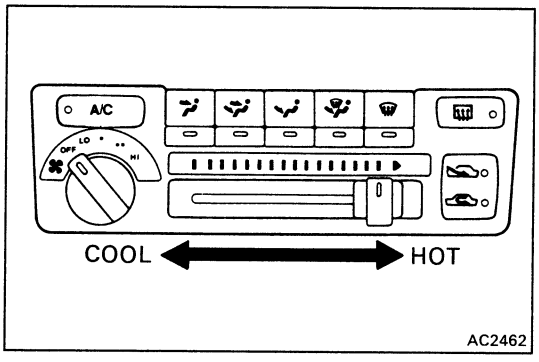

AC2462

Temperature Control Lever

INSPECTION OF TEMPERATURE CONTROL LEVER

INSPECT LEVER OPERATION

Move the control lever left and right, and check for stiffness and bindings through the full range of the levers.

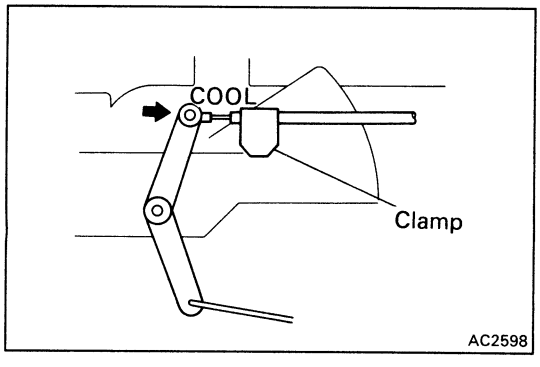

AC2598

ADJUSTMENT OF CONTROL CABLES

1. ADJUST AIR MIX DAMPER CONTROL CABLE

Set the air mix damper and the control lever to "COOL", then install the control cable and lock the clamp.

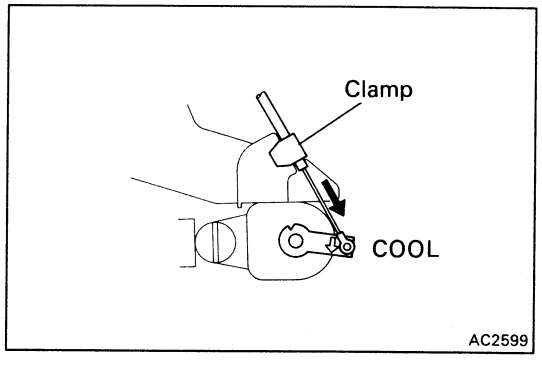

AC2599

2. ADJUST WATER VALVE CONTROL CABLES

Set the water valve and the control lever to "COOL", then install the control cable and lock the clamp.

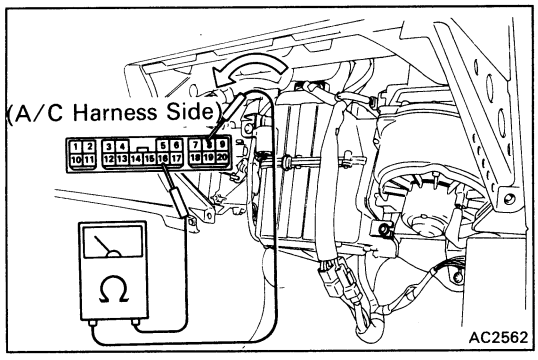

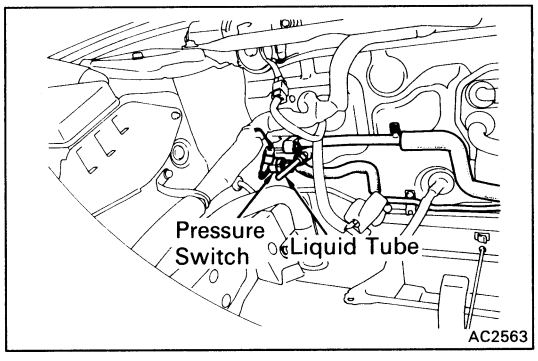

PRESSURE SWITCH

(See page AC-4)

ON-VEHICLE INSPECTION

1. **DISCONNECT CONNECTOR OF PRESSURE SWITCH**

2. **INSPECT PRESSURE SWITCH**

   (a) Install the manifold gauge set.

   (b) Observe the gauge reading.

   (c) Check the continuity between the two terminals of the pressure switch shown in the below.

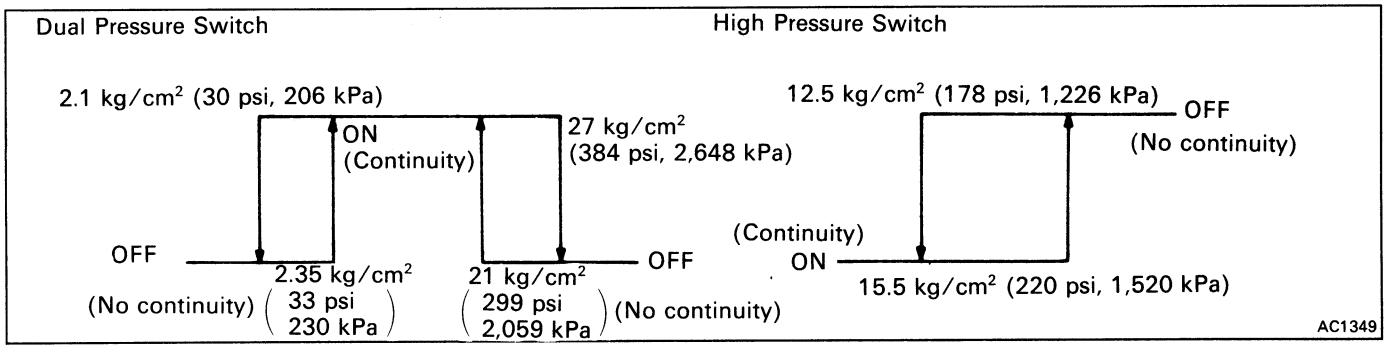

If defective, replace the pressure switch.

3. **CONNECT CONNECTOR OF PRESSURE SWITCH**

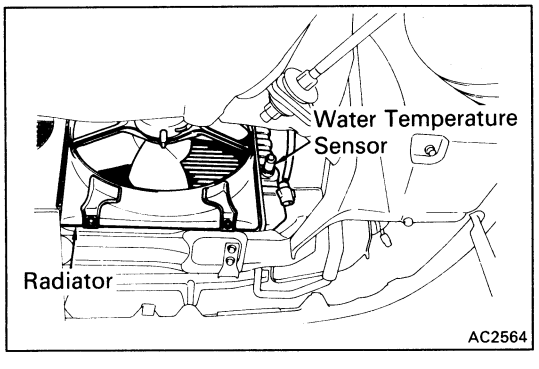

WATER TEMPERATURE SENSOR

(See page AC-4)

INSPECTION OF TEMPERATURE SENSOR

INSPECT WATER TEMPERATURE SENSOR

Using an ohmmeter, measure the resistance of the water temperature sensor.

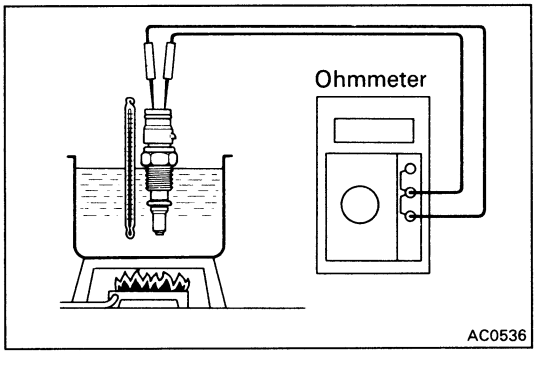

Water temperature	Resistance
85°C (185°F)	approx. 1.35 kΩ
90°C (194°F)	approx. 1.19 kΩ
95°C (203°F)	approx. 1.05 kΩ

If resistance value is not as specified, replace the sensor.

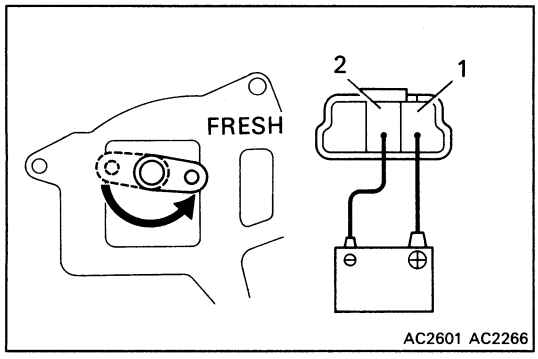

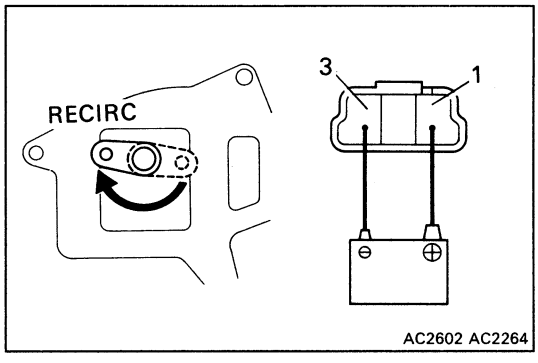

SERVOMOTORS

(See page AC-4)

Air Inlet Servomotor

INSPECTION OF AIR INLET SERVOMOTOR

INSPECT SERVOMOTOR OPERATION

(a) Connect the positive (+) lead from the battery to terminal 1 and the negative (–) lead to terminal 2, check that the arm rotates to the "FRESH" side smoothly.

(b) Connect the positive (+) lead from the battery to terminal 1 and the negative (–) lead to terminal 3, check that the arm rotates to the "RECIRC" side smoothly.

If operation is not as specified, replace the servo motor.

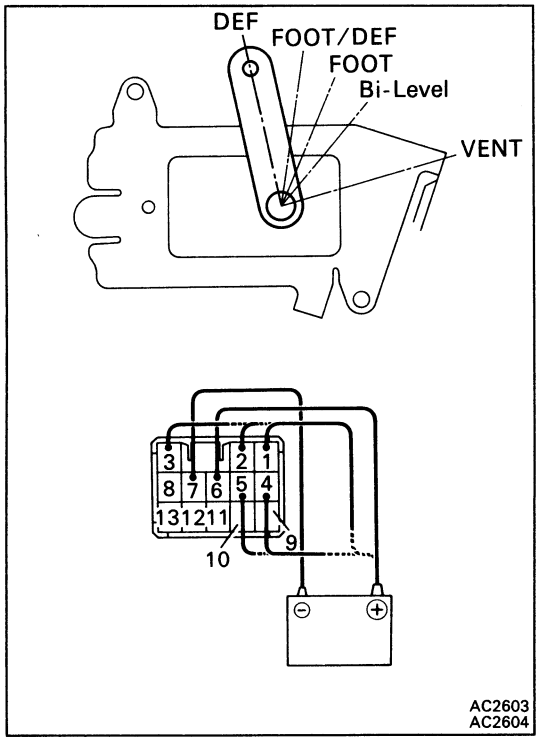

Mode Servomotor

INSPECTION OF MODE SERVOMOTOR

INSPECT SERVOMOTOR OPERATION

(a) Connect the positive (+) lead from the battery to terminal 6 and the negative (–) lead to terminal to 7.

(b) Connect the negative (–) lead from the battery to each terminal and check that the arm rotates to each position as shown.

Connected terminal	Position
1	VENT
2	Bi-Level
3	FOOT
4	FOOT/DEF
5	DEF

If operation is not as specified, replace the servomotor.

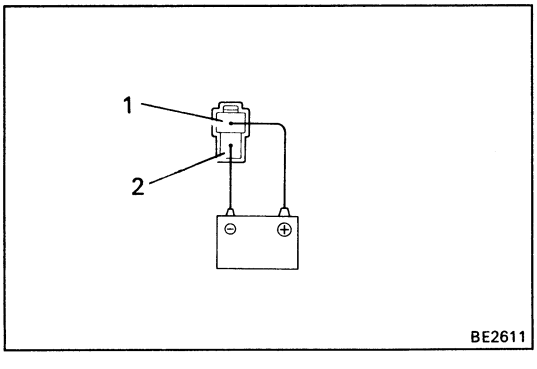

BLOWER MOTOR

(See page AC-4)

INSPECTION OF BLOWER MOTOR

INSPECT BLOWER MOTOR OPERATION

Connect the positive (+) lead from the battery to terminal 1 and the negative (–) lead to terminal 2, check that the motor operation is smooth.

If operation is not as specified, replace the motor.

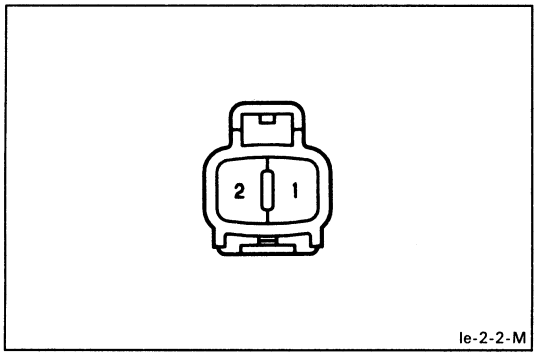

CONDENSER FAN MOTOR

INSPECTION OF CONDENCER FAN MOTOR

INSPECT FAN MOTOR OPERATION

Connect the positive (+) lead from the battery to terminal 1 and the negative (–) lead to terminal 2, check that the motor operation is smooth.

If operation is not as specified, replace the motor.

BLOWER RESISTOR

INSPECTION OF BLOWER RESISTOR

INSPECT BLOWER RESISTOR CONTINUITY

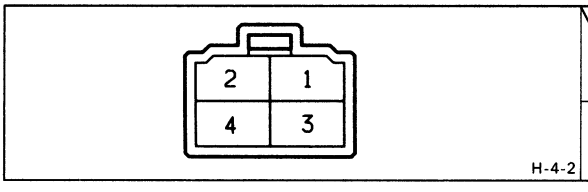

Terminal / Condition	1	3	2	4
Constant	○—WW—○—WW—○—WW—○			

If continuity is not as specified, replace the blower resistor.

HEATER MAIN RELAY

INSPECTION OF HEATER MAIN RELAY

INSPECT RELAY CONTINUITY

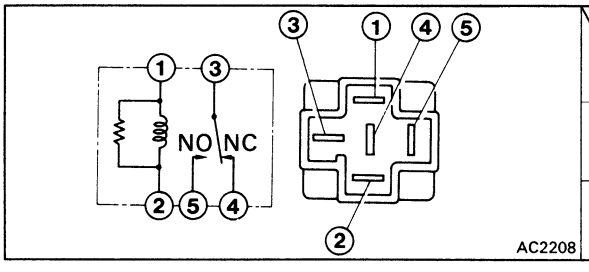

Terminal / Condition	1	2	3	4	5
Constant	○—WW—○		○——○		
Apply battery voltage to terminal 1 and 2			○———		———○

If continuity is not as specified, replace the relay.

MAGNETIC CLUTCH RELAY

INSPECTION OF MAGNETIC CLUTCH RELAY

INSPECT RELAY CONTINUITY

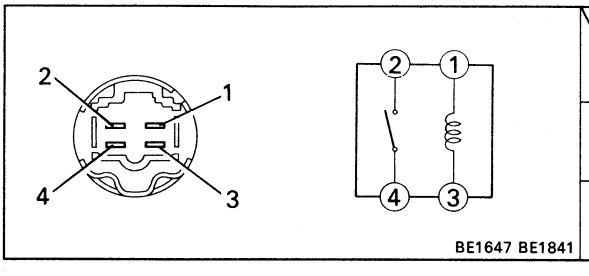

Terminal / Condition	1	2	3	4
Constant	○———	WW	———○	
Apply battery voltage to terminals 1 and 3.		○———		———○

If continuity is not as specified, replace the relay.

FAN MAIN RELAY

INSPECTION OF RELAY

Check the relay the same way as for the Heater Main Relay.

FAN RELAY NO.1

INSPECTION OF RELAY

INSPECT RELAY CONTINUITY

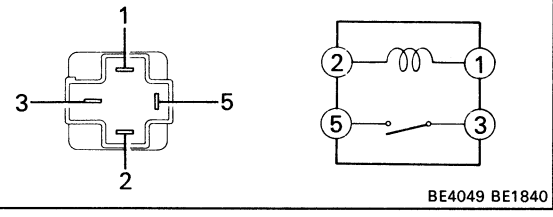

Terminal / Condition	1	2	3	5
Constant	○—∿∿∿—○			
Apply battery voltage to terminals 1 and 2.			○——○	

If continuity is not as specified, replace the relay.

FAN RELAY NO.2

INSPECTION OF RELAY

Check the relay the same way as for the Heater Main Relay.

FAN RELAY NO.3

INSPECTION OF RELAY

Check the relay the same way as for the Fan relay No.1 Relay.

VACUUM HOSE CIRCUIT

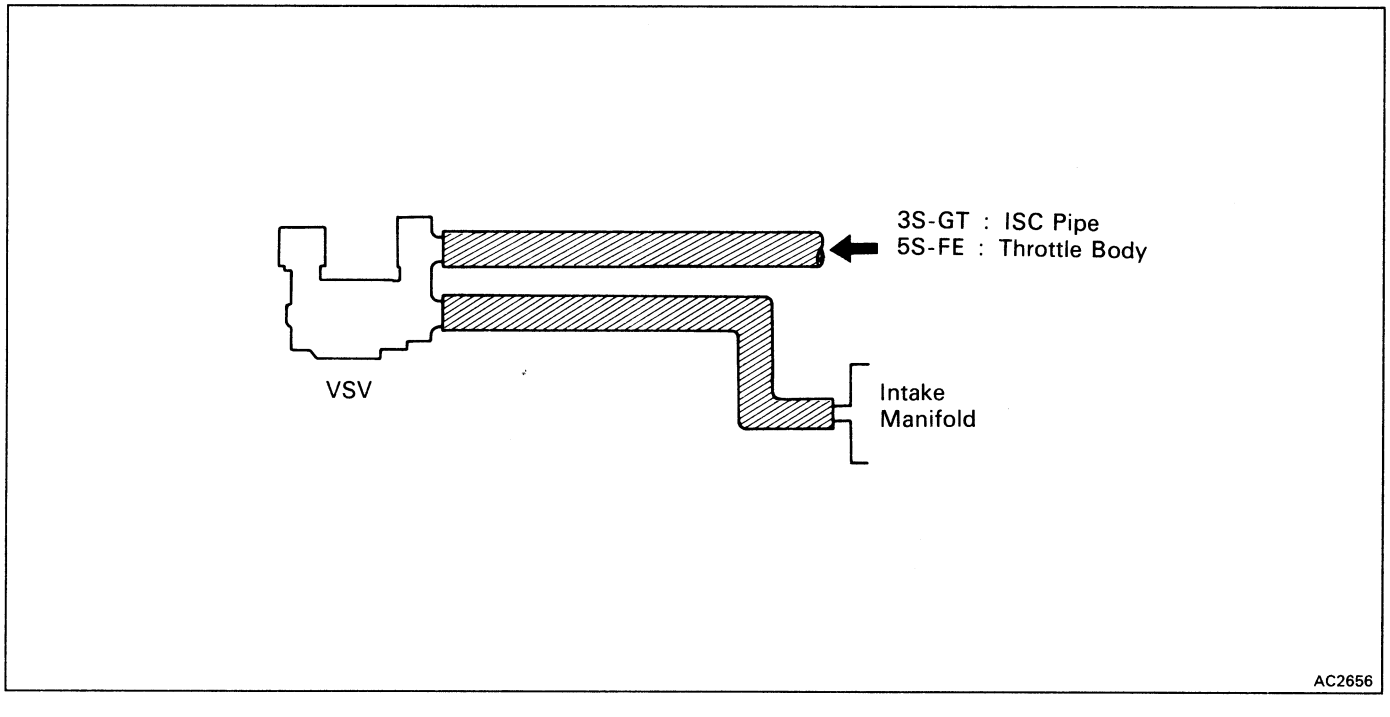

VACUUM SWITCHING VALVE (VSV)

INSPECTION OF IDLE-UP SPEED

1. **WARM UP ENGINE**

2. **SET VEHICLE IN FOLLOWING**
   - Transmission position to Nutral
   - A/C switch ON and Magnetic clutch engaged
   - Blower speed control switch to HI
   - Door window fully opened

3. **INSPECT IDLE-UP SPEED**

   Standard: 950 ± 50 rpm

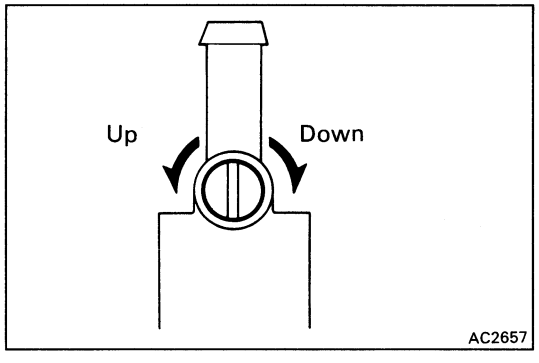

ADJUSTMENT OF IDLE-UP SPEED

If idle-up speed is not as specified, adjust the idle-up speed turning the idle speed adjusting screw on the VSV.

NOTICE: Do not use too much force when tightening the idle adjusting screw.

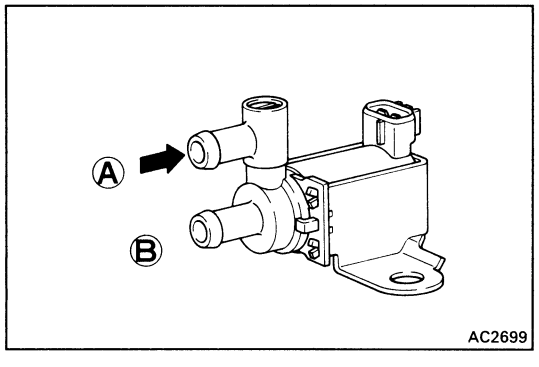

INSPECTION OF VSV OPERATION

INSPECT VSV OPERATION

(a) Blow into pipe "A" and check that air does not come out of pipe "B".

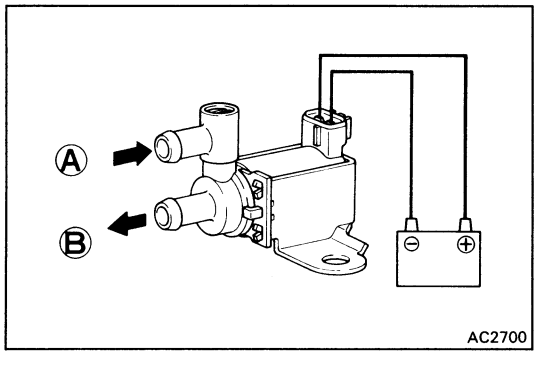

(b) Apply battery voltage (12V) between the terminals 1 and 2.

(c) Blow into pipe "A" and check that air comes out of pipe "B".

If a problem is found, replace the VSV.

Wire Harness Side

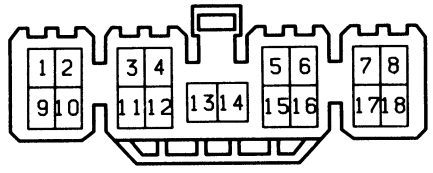

S-18-1

A/C AMPLIFIER

INSPECTION OF AMPLIFIER

INSPECT AMPLIFIER CIRCUIT

Disconnect the amplifier and inspect the connector on the wire harness side as shown in the chart.

Test conditions:

- Temperature control lever: MAX COOL
- Blower fan speed control switch: HI

Check for	Tester connection	Condition		Specified value
Continuity	8 – Engine control ECU terminal A/C	Constant		Continuity
	13 – Ground	Constant		Continuity
Resistance	3 – Ground	Constant		Continuity
	9 – 15	Engine coolant condition	85°C (185°F)	Approx. 1.35 kΩ
			90°C (194°F)	Approx. 1.19 kΩ
			95°C (203°F)	Approx. 1.05 kΩ
	14 – 17	Ambient temperature at 25°C (77°F)		Approx. 1.5 kΩ
Voltage	1 – Ground	Ignition switch position switch ON	LOCK or ACC	No voltage
			ON	Battery voltage
	2 – Ground	Ignition switch position switch ON	LOCK or ACC	No voltage
			ON	Battery voltage
	4 – Ground	Ignition switch position switch ON	LOCK or ACC	No voltage
			ON	Battery voltage
	6 – Ground	A/C switch position with ignition switch ON	OFF	No voltage
			ON	Battery voltage
	7 – Ground (RHD models)	ECON switch position with ignition switch ON	OFF	No voltage
			ON	Battery voltage
	10 – Ground	Ignition switch position switch ON	LOCK or ACC	No voltage
			ON	Battery voltage
	11 – Ground	Ignition switch position switch ON	LOCK or ACC	No voltage
			ON	Battery voltage
	18 – Ground	Engine condition	Running	Approx. 10 to 14 v
			Stopped	No voltage

SERVICE SPECIFICATIONS

	Page
CLUTCH	A-2
MANUAL TRANSAXLE (S54)	A-3
MANUAL TRANSAXLE (E153)	A-6
AUTOMATIC TRANSAXLE (A241E)	A-10
SUSPENSION AND AXLE	A-14
BRAKE SYSTEM	A-16
STEERING	A-17
SRS AIRBAG	A-18
BODY	A-18
LUBRICANT	A-19

CLUTCH

Specifications

Pedal height (from asphalt sheet)			184 – 194 mm	7.2 – 7.6 in.
Release point (from pedal stroke end position)		Minimum	25 mm	0.98 in.
Push rod play pedal top			1.0 – 5.0 mm	0.039 – 0.197 in.
Pedal freeplay			5 – 15 mm	0.20 – 0.59 in.
Clutch start switch	ON-OFF stroke		5.0 ± 0.5 mm	0.197 ± 0.020 in.
Reservoir tank slotted spring pin protrusion			1.5 – 3.5 mm	0.059 – 0.138 in.
Disc rivet head depth		Limit	0.3 mm	0.012 in.
Disc runout		Limit	0.8 mm	0.031 in.
Diaphragm spring tip alignment		Limit	0.5 mm	0.020 in.
Diaphragm spring finger wear	Depth	Limit	0.6 mm	0.024 in.
	Width	Limit	5.0 mm	0.197 in.
Flywheel runout		Limit	0.1 mm	0.004 in.

Torque Specifications

Part tightened	kg-cm	ft-lb	N·m
Clutch master cylinder x Body	130	9	13
Clutch line union x Clutch master cylinder	155	11	15
Clutch release cylinder x Transaxle case	120	9	12
Flexible hose x Transmission control cable bracket	235	17	23
Clutch line union x Flexible hose	200	14	20
Bleeder plug	110	8	11
Transmission control cable bracket x Clutch release cylinder tube	155	11	15
Clutch release cylinder tube x Release cylinder body	155	11	15
Heat insulator x Release cylinder body	120	9	12
Engine front mounting bracket x Transaxle case	790	57	77
Release fork support x Transaxle case	480	35	47
Clutch cover x Flywheel	195	14	19
Crankshaft x Flywheel	1,000	72	98

MANUAL TRANSAXLE (S54)

Specifications

S54 transaxle	Input shaft				
	Roller bearing journal diameter		Limit	29.970 mm	1.1799 in.
	3rd gear journal diameter		Limit	33.090 mm	1.3028 in.
	4th gear journal diameter		Limit	32.420 mm	1.2764 in.
	5th gear journal diameter		Limit	26.970 mm	1.0618 in.
	Runout		Limit	0.05 mm	0.0020 in.
	Slotted spring pin drive in depth			4.5 – 5.5 mm	0.177 – 0.217 in.
	Output shaft				
	Roller bearing journal diameter		Limit	31.970 mm	1.2587 in.
	1st gear journal diameter		Limit	37.970 mm	1.4949 in.
	2nd gear journal diameter		Limit	31.970 mm	1.2587 in.
	Runout		Limit	0.05 mm	0.0020 in.
	Slotted spring pin drive in depth			4.5 – 5.5 mm	0.177 – 0.217 in.
	Gear thrust clearance	1st	STD	0.10 – 0.29 mm	0.0039 – 0.0114 in.
			Limit	0.35 mm	0.0138 in.
		2nd	STD	0.20 – 0.44 mm	0.0079 – 0.0173 in.
			Limit	0.50 mm	0.0197 in.
		3rd	STD	0.10 – 0.25 mm	0.0039 – 0.0098 in.
			Limit	0.30 mm	0.0118 in.
		4th	STD	0.20 – 0.45 mm	0.0079 – 0.0177 in.
			Limit	0.50 mm	0.0197 in.
		5th	STD	0.20 – 0.40 mm	0.0079 – 0.0157 in.
			Limit	0.45 mm	0.0177 in.
	Gear oil clearance				
		1st, 2nd, 3rd & 4th	STD	0.009 – 0.053 mm	0.0004 – 0.0021 in.
			Limit	0.070 mm	0.0028 in.
		5th	STD	0.009 – 0.050 mm	0.0004 – 0.0020 in.
			Limit	0.070 mm	0.0028 in.
	Shift fork to hub sleeve clearance		Limit	1.0 mm	0.039 in.
	Synchronizer ring to gear clearance		Limit	0.6 mm	0.024 in.
	Reverse shift fork oil clearance		Limit	0.70 mm	0.0276 in.
	Input shaft snap ring thickness				
	No. 2 clutch hub		Mark		
			1	1.95 – 2.00 mm	0.0768 – 0.0787 in.
			2	2.00 – 2.05 mm	0.0787 – 0.0807 in.
			3	2.05 – 2.10 mm	0.0807 – 0.0827 in.
			4	2.10 – 2.15 mm	0.0827 – 0.0846 in.
			5	2.15 – 2.20 mm	0.0846 – 0.0866 in.
			6	2.20 – 2.25 mm	0.0866 – 0.0866 in.
	No. 3 clutch hub		Mark		
			1	1.60 – 1.65 mm	0.0630 – 0.0650 in.
			2	1.65 – 1.70 mm	0.0650 – 0.0669 in.
			3	1.70 – 1.75 mm	0.0669 – 0.0689 in.
			4	1.75 – 1.80 mm	0.0689 – 0.0709 in.
			5	1.80 – 1.85 mm	0.0709 – 0.0728 in.
			6	1.85 – 1.90 mm	0.0728 – 0.0748 in.
			7	1.90 – 1.95 mm	0.0748 – 0.0768 in.
			8	1.95 – 2.00 mm	0.0768 – 0.0787 in.
			9	2.00 – 2.05 mm	0.0787 – 0.0807 in.
			10	2.05 – 2.10 mm	0.0807 – 0.0827 in.
			11	2.10 – 2.15 mm	0.0827 – 0.0846 in.
			12	2.15 – 2.20 mm	0.0846 – 0.0866 in.
			13	2.20 – 2.25 mm	0.0866 – 0.0886 in.
			14	2.25 – 2.30 mm	0.0886 – 0.0906 in.
			15	2.30 – 2.35 mm	0.0906 – 0.0925 in.

Specifications (Cont'd)

S54 transaxle (cont'd)	Input shaft snap ring thickness (cont'd)			
	Rear bearing	Mark		
		A	2.15 – 2.20 mm	0.0846 – 0.0866 in.
		B	2.20 – 2.25 mm	0.0866 – 0.0886 in.
		C	2.25 – 2.30 mm	0.0886 – 0.0906 in.
		D	2.30 – 2.35 mm	0.0906 – 0.0925 in.
		E	2.35 – 2.40 mm	0.0925 – 0.0945 in.
	Output shaft snap ring thickness			
	No. 1 clutch hub	Mark		
		1	2.50 – 2.55 mm	0.0984 – 0.1004 in.
		2	2.55 – 2.60 mm	0.1004 – 0.1024 in.
		3	2.60 – 2.65 mm	0.1024 – 0.1043 in.
		4	2.65 – 2.70 mm	0.1043 – 0.1063 in.
		5	2.70 – 2.75 mm	0.1063 – 0.1083 in.
		6	2.75 – 2.80 mm	0.1083 – 0.1102 in.
	Differential			
	Side gear backlash		0.05 – 0.20 mm	0.0020 – 0.0079 in.
	Side gear thrust washer thickness		0.95 mm	0.0374 in.
			1.00 mm	0.0394 in.
			1.05 mm	0.0413 in.
			1.10 mm	0.0433 in.
			1.15 mm	0.0453 in.
			1.20 mm	0.0472 in.
	Side bearing preload (at staring)		8 – 16 kg-cm	6.9 – 13.9 in.-lb 0.8 – 1.6 N·m
	Side bearing adjusting shim thickness	Mark		
		1	1.90 mm	0.0748 in.
		2	1.95 mm	0.0768 in.
		3	2.00 mm	0.0787 in.
		4	2.05 mm	0.0807 in.
		5	2.10 mm	0.0827 in.
		6	2.15 mm	0.0846 in.
		7	2.20 mm	0.0866 in.
		8	2.25 mm	0.0886 in.
		9	2.30 mm	0.0906 in.
		10	2.35 mm	0.0925 in.
		11	2.40 mm	0.0945 in.
		12	2.45 mm	0.0965 in.
		13	2.50 mm	0.0984 in.
		14	2.55 mm	0.1004 in.
		15	2.60 mm	0.1024 in.
		16	2.65 mm	0.1043 in.
		17	2.70 mm	0.1063 in.
		18	2.75 mm	0.1083 in.
		19	2.80 mm	0.1102 in.
	No. 2 fork shaft slotted spring pin drive in depth		29.5 – 30.5 mm	1.16 – 1.20 in.
	No. 1 shift head slotted spring pin drive in depth		2.0 – 3.0 mm	0.08 – 0.12 in.
	No. 1 fork shaft slotted spring pin drive in depth		3.5 – 4.5 mm	0.14 – 0.18 in.
	Control shaft cover oil seal drive in depth		9.7 – 10.3 mm	0.38 – 0.41 in.

Torque Specifications

S54 transaxle	Part tightened	kg-cm	ft-lb	N·m
	Transaxle x Engine 12 mm bolt	650	47	64
	10 mm bolt	470	34	46
	Transaxle x Starter	400	29	39
	Transaxle x Front engine mounting bracket	790	57	77
	Transaxle x Rear engine mounting bracket	790	57	77
	LH engine mounting bracket x Transaxle	530	38	52
	LH engine mounting stay x Transaxle	380	27	37
	LH engine mounting stay x LH engine mounting	740	54	73
	LH engine mounting x LH engine mounting bracket	650	47	64
	Input shaft front bearing lock plate bolt	185	13	18
	Output shaft front bearing lock plate bolt	185	13	18
	Differential side bearing retainer x Transmission case	185	13	18
	Straight screw plug	130	9	13
	Transaxle case x Transmission case	300	22	29
	Reverse shift arm bracket x Transaxle case	185	13	18
	Reverse idler gear shaft lock bolt	300	22	29
	Rear bearing retainer x Transmission case	210	15	21
	5th driven gear lock nut	1,250	90	123
	Control shaft cover x Transmission case	375	27	37
	Lock ball assembly	230	17	23
	No. 1 lock ball assembly lock nut	375	27	37
	Shift fork x Fork shaft	185	13	18
	No. 1 oil receiver pipe x Transmission case	75	65 in.-lb	7.4
	Transmission case cover x Transmission case	300	22	29
	Release bearing retainer x Transaxle case	75	65 in.-lb	7.4
	Back-up light switch	450	33	44
	Transaxle case oil receiver x Transaxle case	75	65 in.-lb	7.4
	Drain plug	500	36	49
	Filler plug	500	36	49
	Transmission case protector x Transmission case	185	13	18
	Clutch release cylinder x Transaxle	120	9	12
	Stiffener plate	380	27	37
	Selecting bell crank x Transmission case	200	14	20
	Shift lever x Shift and select lever shaft	120	9	12
Shift lever and control cable	Shift lever retainer x Body	120	9	12
	Shift lever plate x Shift lever retainer	195	14	19
	Shift lever x Shift control cable	135	10	13
	Cable bracket x Body	50	43 in.-lb	5
	Grommet retainer set nut	50	43 in.-lb	5

MANUAL TRANSAXLE (E153)

Specifications

E153 transaxle	Input shaft				
	3rd and 4th gear journal diameter		Limit	35.950 mm	1.4154 in.
	5th gear journal diameter		Limit	32.930 mm	1.2965 in.
	Runout		Limit	0.05 mm	0.0020 in.
	Output shaft				
	Roller bearing journal diameter		Limit	32.070 mm	1.2626 in.
	1st and 2nd gear journal diameter		Limit	38.950 mm	1.5335 in.
	Runout		Limit	0.06 mm	0.0024 in.
	Gear thrust clearance	1st	STD	0.10 – 0.35 mm	0.0039 – 0.0138 in.
			Limit	0.40 mm	0.0157 in.
		2nd	STD	0.10 – 0.45 mm	0.0039 – 0.0177 in.
			Limit	0.50 mm	0.0197 in.
		3rd	STD	0.10 – 0.35 mm	0.0039 – 0.0138 in.
			Limit	0.40 mm	0.0157 in.
		4th	STD	0.10 – 0.55 mm	0.0039 – 0.0217 in.
			Limit	0.60 mm	0.0236 in.
		5th	STD	0.10 – 0.57 mm	0.0039 – 0.0224 in.
			Limit	0.65 mm	0.0256 in.
	Gear oil clearance				
	1st & 4th		STD	0.009 – 0.051 mm	0.0004 – 0.0020 in.
			Limit	0.070 mm	0.0028 in.
	2nd & 3rd		STD	0.009 – 0.053 mm	0.0004 – 0.0021 in.
			Limit	0.070 mm	0.0028 in.
	5th		STD	0.009 – 0.050 mm	0.0004 – 0.0020 in.
			Limit	0.070 mm	0.0028 in.
	Reverse idler		STD	0.056 – 0.090 mm	0.0022 – 0.0035 in.
			Limit	0.120 mm	0.0047 in.
	Shift fork to hub sleeve clearance		Limit	1.0 mm	0.039 in.
	Synchronizer ring to gear clearance		Limit	0.6 mm	0.024 in.
	Output shaft bearing preload (at starting)				
		New bearing		8 – 16 kg-cm (6.9 – 13.9 in.-lb, 0.8 – 1.6 N·m)	
		Reused bearing		5 – 10 kg-cm (4.3 – 8.7 in.-lb, 0.5 – 1.0 N·m)	
	Side bearing preload (at starting)				
		New bearing		Output shaft bearing preload 1.9 – 3.7 kg-cm (1.6 – 3.2 in.-lb, 0.2 – 0.4 N·m)	
		Reused bearing		Output shaft bearing preload 1.2 – 2.3 kg-cm (1.0 – 2.0 in.-lb, 0.1 – 0.2 N·m)	
	Speedometer driven gear oil seal drive in depth			33 mm	1.30 in.
	Oil pump				
	Body clearance		STD	0.10 – 0.16 mm	0.004 – 0.006 in.
			Limit	0.30 mm	0.012 in.
	Tip clearance		STD	0.08 – 0.15 mm	0.003 – 0.006 in.
			Limit	0.30 mm	0.012 in.
	Side clearance		STD	0.03 – 0.08 mm	0.001 – 0.003 in.
			Limit	0.15 mm	0.006 in.

Specifications (Cont'd)

E153 transaxle (cont'd)	Input shaft snap ring thickness			
	No. 2 clutch hub	Mark		
		H	2.30 mm	0.0906 in.
		J	2.35 mm	0.0925 in.
		K	2.40 mm	0.0945 in.
		L	2.45 mm	0.0965 in.
		M	2.50 mm	0.0984 in.
		N	2.55 mm	0.1004 in.
		P	2.60 mm	0.1024 in.
	Input rear bearing	Mark		
		1	2.35 mm	0.0925 in.
		2	2.40 mm	0.0945 in.
		3	2.45 mm	0.0965 in.
		4	2.50 mm	0.0984 in.
		5	2.55 mm	0.1004 in.
		6	2.60 mm	0.1024 in.
		7	2.65 mm	0.1043 in.
		8	2.70 mm	0.1063 in.
	Output shaft snap ring thickness			
	No. 1 clutch hub	Mark		
		A	2.80 mm	0.1102 in.
		B	2.85 mm	0.1122 in.
		C	2.90 mm	0.1142 in.
		D	2.95 mm	0.1161 in.
		E	3.00 mm	0.1181 in.
		F	3.05 mm	0.1201 in.
		G	3.10 mm	0.1220 in.
	No. 3 clutch hub	Mark		
		Q	2.25 mm	0.0886 in.
		R	2.30 mm	0.0906 in.
		S	2.35 mm	0.0925 in.
		T	2.40 mm	0.0945 in.
		U	2.45 mm	0.0965 in.
		V	2.50 mm	0.0984 in.
		W	2.55 mm	0.1004 in.
		X	2.60 mm	0.1024 in.
		Y	2.65 mm	0.1043 in.
	Output shaft rear bearing adjusting shim thickness	Mark		
		0	1.30 mm	0.0512 in.
		1	1.35 mm	0.0531 in.
		2	1.40 mm	0.0551 in.
		3	1.45 mm	0.0571 in.
		4	1.50 mm	0.0591 in.
		5	1.55 mm	0.0610 in.
		6	1.60 mm	0.0630 in.
		7	1.65 mm	0.0650 in.
		8	1.70 mm	0.0669 in.
		9	1.75 mm	0.0689 in.

Specifications (Cont'd)

E153 transaxle (cont'd)	Output shaft rear bearing adjusting shim thickness (cont'd)	Mark		
		A	1.80 mm	0.0709 in.
		B	1.85 mm	0.0728 in.
		C	1.90 mm	0.0748 in.
		D	1.95 mm	0.0768 in.
		E	2.00 mm	0.0787 in.
		F	2.05 mm	0.0807 in.
		G	2.10 mm	0.0827 in.
		H	2.15 mm	0.0846 in.
		J	2.20 mm	0.0866 in.
		K	2.25 mm	0.0886 in.
		L	2.30 mm	0.0906 in.
		M	2.35 mm	0.0925 in.
		N	2.40 mm	0.0945 in.
		P	2.45 mm	0.0965 in.
		Q	2.50 mm	0.0984 in.
	Differential pinion to side gear backlash		0.05 – 0.20 mm	0.0020 – 0.0079 in.
	Differential side gear thrust washer thickness		0.80 mm	0.0315 in.
			0.90 mm	0.0354 in.
			1.00 mm	0.0394 in.
			1.10 mm	0.0433 in.
			1.20 mm	0.0472 in.
			1.30 mm	0.0512 in.
			1.40 mm	0.0551 in.
	Differential side bearing adjusting shim thickness	Mark		
		0	2.00 mm	0.0787 in.
		1	2.05 mm	0.0807 in.
		2	2.10 mm	0.0827 in.
		3	2.15 mm	0.0846 in.
		4	2.20 mm	0.0866 in.
		5	2.25 mm	0.0886 in.
		6	2.30 mm	0.0906 in.
		7	2.35 mm	0.0925 in.
		8	2.40 mm	0.0945 in.
		9	2.45 mm	0.0965 in.
		A	2.50 mm	0.0984 in.
		B	2.55 mm	0.1004 in.
		C	2.60 mm	0.1024 in.
		D	2.65 mm	0.1043 in.
		E	2.70 mm	0.1063 in.
		F	2.75 mm	0.1083 in.
		G	2.80 mm	0.1102 in.
		H	2.85 mm	0.1122 in.

Torque Specifications

E153 transaxle	Part tightened	kg-cm	ft-lb	N·m
	Transaxle x Engine	650	47	64
		470	34	46
		380	27	37
	Transaxle x Starter	400	29	39
	Transaxle x Front engine mounting bracket	790	57	77
	Transaxle x Rear engine mounting bracket	790	57	77
	LH engine mounting stay x Transaxle	380	27	37
	LH engine mounting stay x LH engine mounting	740	54	73
	LH engine mounting x LH engine mounting bracket	650	47	64
	Oil pump cover bolt	105	8	10
	Differential right case x Differential left case	640	46	63
	Differential case x Ring gear	1,260	91	124
	Transmission case x Transaxle case	300	22	29
	Transmission case x Case cover	300	22	29
	Rear bearing retainer x Transmission case	430	31	42
	5th driven gear lock nut	1,250	90	123
	Reverse idler shaft lock bolt	300	22	29
	Control shaft cover bolt	200	14	20
	Reverse shift arm bracket x Transaxle case	175	13	17
	Shift fork x Fork shaft	240	17	24
	Filler plug	500	36	49
	Drain plug	500	36	49
	Back-up light switch	410	30	40
	Selecting bellcrank x Transmission case	200	14	20
	Oil pipe clamp	175	13	17
	Shift lever x Shift and select lever shaft	120	9	12
	Lock bolt x Transmission case	500	36	49
	Straight screw plug	250	18	25
	Stiffener plate	380	27	37
	Clutch release cylinder x Transaxle	120	9	12
Shift lever and control cable	Same the S54 manual transaxle (See page A-5)			

AUTOMATIC TRANSAXLE (A241E)

Specifications

Line pressure	Engine idling	D range R range	3.8 – 4.3 kg/cm^2 6.5 – 8.1 kg/cm^2	54 – 61 psi 92 – 115 psi	373 – 422 kPa 637 – 794 kPa
	At stall	D range R range	7.3 – 8.8 kg/cm^2 13.6 – 16.1 kg/cm^2	104 – 125 psi 193 – 229 psi	716 – 863 kPa 1,334 – 1,579 kPa

Engine stall revolution		2,550 ± 150 rpm	
Time lag	N range → D range	Less than 1.2 seconds	
	N range → R range	Less than 1.5 seconds	
Engine idle speed (A/C OFF, N range)		700 ± 50 rpm	
Throttle cable adjustment (Throttle valve fully closed)		Between boot end face and inner cable stopper	
		0 – 1 mm	0 – 0.04 in.
Torque converter installation	Correct distance	13.0 mm	0.51 in.
Torque converter sleeve runout		0.3 mm	0.0118 in.
Drive plate runout		0.2 mm	0.0079 in.

Shift schedule

	Throttle valve fully open [Fully closed] km/h (mph)							
	1 → 2	2 → 3	3 → O/D	[3 → O/D]	[O/D → 3]	O/D → 3	3 → 2	2 → 1
D range	53 – 59 (33 – 37)	102 – 112 (63 – 70)	137 – 149 (85 – 93)	[46 – 52 (29 – 32)]	[19 – 24 (12 – 15)]	131 – 143 (81 – 89)	98 – 108 (61 – 67)	44 – 50 (27 – 31)
2 range	53 – 59 (33 – 37)	—	—	—	—	—	—	44 – 50 (27 – 31)
L range	—	—	—	—	—	—	—	34 – 40 (21 – 25)

Lock-up point

	Throttle valve opening 5% km/h (mph)	
	Lock-up ON	Lock-up OFF
	O/D	O/D
D range	80 – 87 (50 – 54)	74 – 80 (46 – 50)

Second coast brake	Piston stroke		1.5 – 3.0 mm	0.059 – 0.118 in.
	Piston rod length		72.9 mm	2.870 in.
			71.4 mm	2.811 in.
Oil pump	Body clearance	STD	0.07 – 0.15 mm	0.0028 – 0.0059 in.
		Maximum	0.3 mm	0.012 in.
	Tip clearance	STD	0.11 – 0.14 mm	0.0043 – 0.0055 in.
		Maximum	0.3 mm	0.012 in.
	Side clearance	STD	0.02 – 0.05 mm	0.0008 – 0.0020 in.
		Maximum	0.1 mm	0.004 in.
	Pump body bushing inside diameter	Maximum	38.18 mm	1.5031 in.
	Stator shaft bushing inside diameter			
	Front side	Maximum	21.57 mm	0.8492 in.
	Rear side	Maximum	27.07 mm	1.0657 in.
Direct clutch	Piston stroke		1.11 – 1.47 mm	0.0437 – 0.0579 in.
	Drum bushing inside diameter		47.07 mm	1.8531 in.
	Flange thickness		2.6 mm	0.102 in.
			3.0 mm	0.118 in.
Forward clutch	Piston stroke		1.42 – 1.81 mm	0.0559 – 0.0713 in.
	Flange thickness		3.00 mm	0.1181 in.
			3.37 mm	0.1327 in.

Specifications (Cont'd)

Front planetary gear	Sun gear bushing inside diameter	Standard	22.025 – 22.046 mm	0.8671 – 0.8680 in.
		Maximum	22.096 mm	0.8699 in.
	Ring gear flange bushing inside diameter	Standard	19.025 – 19.050 mm	0.7490 – 0.7500 in.
	Planetary pinion gear thrust clearance	Maximum	0.5 mm	0.020 in.
Rear planetary gear	Planetary pinion gear thrust clearance	Maximum	0.5 mm	0.020 in.
Counter shaft	Starting torque with spring tension gauge		1.2 – 2.0 kg	2.6 – 4.4 lb
	with torque gauge (hexagon nut side)	New bearing	6 – 10 kg-cm	5.2 – 8.7 in.-lb 0.6 – 1.0 N·m
		Reused bearing	3 – 5 kg-cm	2.6 – 4.3 in.-lb 0.3 – 0.5 N·m
	Planetary sun gear bushing inside diameter	Standard	29.800 – 29.825 mm	1.1732 – 1.1742 in.
		Maximum	29.870 mm	1.1760 in.
	Underdrive planetary pinion gear thrust clearance	Maximum	0.5 mm	0.020 in.
	Height (measure the distance between the tip of the counter shaft and bolt seat of the clutch support.)		33.3 – 35.5 mm	1.311 – 1.398 in.
	End play		0.23 – 0.89 mm	0.0091 – 0.0350 in.
Underdrive clutch and one-way clutch No. 3	Clutch drum bushing inside diameter			
		Standard Front side	46.500 – 46.525 mm	1.8307 – 1.8317 in.
		Rear side	55.000 – 55.030 mm	2.1654 – 2.1665 in.
		Maximum Front side	46.570 mm	1.8335 in.
		Rear side	55.080 mm	2.1685 in.
	Underdrive clutch piston stroke		1.22 – 1.54 mm	0.0480 – 0.0606 in.
	Flange thickness		2.30 mm	0.0906 in.
			2.50 mm	0.0984 in.
			2.70 mm	0.1063 in.
Intermediate shaft	Intermediate shaft protrusion length (Reference)		115.8 mm	4.559 in.
Input shaft	Thrust play		0.3 – 0.9 mm	0.012 – 0.035 in.

Specifications (Cont'd)

Valve body spring	Spring	Free length mm (in.)	Coil outer diameter mm (in.)	Total No. of coils	Color
	(Upper valve body)				
	Primary regulator valve	66.7 (2.626)	18.6 (0.732)	12.5	Purple
	Lock-up relay valve	18.8 (0.740)	5.1 (0.201)	14.5	None
	Low coast modulator valve	27.5 (1.083)	8.3 (0.327)	12.5	Yellow
	Down shift plug	30.0 (1.181)	8.7 (0.343)	12.5	Red
	Throttle valve	29.2 (1.150)	9.2 (0.362)	9.5	Light Green
	Throttle modulator valve	29.9 (1.177)	9.0 (0.354)	15.5	Green
	Accumulator control valve	33.2 (1.307)	10.0 (0.394)	11.5	Orange
	(Low valve body)				
	Cooler by-pass valve	18.3 (0.720)	12.0 (0.472)	6.5	Yellow
	Pressure relief valve	11.2 (0.441)	6.4 (0.252)	7.5	None
	2-3 shift valve	30.7 (1.209)	9.7 (0.382)	10.5	Purple
	2nd coast modulator valve	29.6 (1.165)	8.3 (0.327)	12.5	Red
	Lock-up signal valve	30.0 (1.181)	8.2 (0.323)	11.5	Orange
	Secondary regulator valve	27.4 (1.079)	11.0 (0.433)	11.5	Blue
	1-2 shift valve	30.8 (1.213)	9.7 (0.382)	10.5	Purple
	3-4 shift valve	30.8 (1.213)	9.7 (0.382)	10.5	Purple

Valve body retainer	Retainer	Height mm (in.)	Width mm (in.)	Thickness mm (in.)
	(Upper valve body)			
	Accumulator control valve	15.0 (0.591)	5.0 (0.197)	3.2 (0.126)
	Cut-back valve	16.0 (0.630)	5.0 (0.197)	3.2 (0.126)
	Low coast modulator valve	21.2 (0.835)	5.0 (0.197)	3.2 (0.126)
	(Lower valve body)			
	2-3 shift valve	11.5 (0.453)	5.0 (0.197)	3.2 (0.126)
	2nd coast modulator valve	11.5 (0.453)	5.0 (0.197)	3.2 (0.126)
	Lock-up signal valve	11.5 (0.453)	5.0 (0.197)	3.2 (0.126)
	1-2 shift valve	11.5 (0.453)	5.0 (0.197)	3.2 (0.126)
	3-4 shift valve	11.5 (0.453)	5.0 (0.197)	3.2 (0.126)
	Secondary regulator valve	9.2 (0.362)	5.0 (0.197)	3.2 (0.126)

Accumulator spring	Spring	Free length mm (in.)	Color
	C_1 Outer	74.1 (2.917)	Pink
	C_1 Inner	41.0 (1.614)	Pink
	C_2	62.5 (2.461)	Pink
	C_3 Outer	65.2 (2.570)	Blue
	C_3 Inner	48.0 (1.890)	Orange
	B_2	64.5 (2.539)	Green

Differential	Side bearing preload (at Starting)		
	New bearing	8 – 14 kg-cm	6.9 – 12.2 in.-lb 0.8 – 1.4 N·m
	Reused bearing	4 – 7 kg-cm	3.5 – 6.1 in.-lb 0.4 – 0.7 N·m
	Pinion to side gear backlash	0.05 – 0.20 mm	0.0020 – 0.0079 in.
	Side gear thrust washer thickness	0.95 mm	0.0374 in.
		1.00 mm	0.0394 in.
		1.05 mm	0.0413 in.
		1.10 mm	0.0433 in.
		1.15 mm	0.0453 in.
		1.20 mm	0.0472 in.

Specifications (Cont'd)

Differential (cont'd)	Side bearing adjusting shim thickness	2.00 mm	0.0787 in.
		2.05 mm	0.0807 in.
		2.10 mm	0.0827 in.
		2.15 mm	0.0846 in.
		2.20 mm	0.0866 in.
		2.25 mm	0.0886 in.
		2.30 mm	0.0906 in.
		2.35 mm	0.0925 in.
		2.40 mm	0.0945 in.
		2.45 mm	0.0965 in.
		2.50 mm	0.0984 in.
		2.55 mm	0.1004 in.
		2.60 mm	0.1024 in.
		2.65 mm	0.1043 in.
		2.70 mm	0.1063 in.
		2.75 mm	0.1083 in.
		2.80 mm	0.1102 in.
		2.85 mm	0.1122 in.
		2.90 mm	0.1142 in.

Torque Specifications

Part tightened	kg-cm	ft-lb	N·m
Neutral start switch x Transaxle case	55	48 in.-lb	5.4
Torque converter x Drive plate	280	20	27
Drive plate x Crank shaft	850	61	83
Oil pump body x Stator shaft	100	7	10
Upper valve body x Lower valve body	65	56 in.-lb	6.4
Solenoid x Lower valve body	100	7	10
Ring gear x Differential case	985	71	97
Transaxle housing x Transmission case	300	22	29
Counter shaft x Driven gear	1,600	116	157
Oil pump x Transaxle case	250	18	25
Accumulator cover x Transaxle case	100	7	10
Valve body x Transaxle case	100	7	10
Manual detent spring x Transaxle case	100	7	10
Oil tube bracket	100	7	10
Oil pan	50	43 in.-lb	4.9
Speed sensor x Transaxle case	100	7	10
Sensor adopter	100	7	10
Sensor cover bracket	130	9	13
Neutral start switch x Manual valve shaft	70	61 in.-lb	6.9
Transaxle housing x Engine	650	47	64
Transaxle rear cover x Transaxle case	300	22	29

SUSPENSION AND AXLE

Specifications

Cold tire inflation pressure kg/cm² (psi, kPa)	Tire size		Front	Rear
	5S-FE Engine	195/60R14 85H 205/60R14 87H	2.0 (29, 200) —	— 23 (33, 225)
	3S-GTE Engine	195/60R14 85V 205/60R14 87V	2.0 (29, 200) —	— 23 (33, 225)
Chassis ground clearance mm (in.)	All models		224.0 (8.819)	203.0 (7.992)
Front wheel alignment			Inspection STD	Adjustment STD
	Toe-in Left-right error		1 ± 2 mm (0.04 ± 0.08 in.) 1.0 mm (0.039 in.) or less	1 ± 1 mm (0.04 ± 0.04 in.) 1.0 mm (0.039 in.) or less
	Camber Left-right error		– 0°55′ ± 30′ 30′ or less	— —
	Caster Left-right error		2°45′ ± 45′ 30′ or less	2°45′ ± 30′ 30′ or less
	Steering axis inclination Left-right error		13°35′ ± 30′ 30′ or less	— —
	Wheel angle (Maximum)	Outside wheel	32°	
		Inside wheel	37°30′ ± 1°30′	
	Side slip (Reference only)		3.0 mm/m (0.118 in./3.3 ft) or less	
Rear wheel alignment			Inspection STD	Adjustment STD
	Toe-in Left-right error		5 ± 1 mm (0.20 ± 0.04 in.) 10° or more	1 ± 1 mm (0.04 ± 0.04 in.) 10° or more
	Camber Left-right error		– 1°20′ ± 30′ 30′ or less	— —
Wheel lateral runout	Less than 1.0 mm (0.039 in.)			
Front axle and suspension	Hub bearing axial direction	Limit	0.5 mm	0.0020 in.
	Ball joint rotation condition		8 – 25 kg-cm (7 – 22 in.-lb, 0.8 – 2.5 N·m)	
	Ball joint vertical play		0 mm	0 in.
	Strut bar length		362 mm	14.25 in.
Rear axle and suspension	Hub bearing axial direction	Limit	0.5 mm	0.0020 in.
	Ball joint rotation condition		0.5 – 10 kg-cm (0.43 – 8.68 in.-lb, 0.05 – 0.98 N·m)	
	Ball joint vertical play		0 mm	0 in.
	Drive shaft grease capacity			
	Outboard joint	5S-FE engine	120 – 130 g	0.26 – 0.29 lb
		3S-GTE engine	120 – 130 g	0.26 – 0.29 lb
	Inboard joint	5S-FE engine	232 – 242 g	0.51 – 0.53 lb
		3S-GTE engine	90 – 100 g	0.20 – 0.22 lb
	Side gear shaft	3S-GTE engine	43 – 53 g	0.09 – 0.12 lb
	Drive shaft standard length			
		5S-FE engine LH	540.3 ± 5.0 mm	21.272 ± 0.197 in.
		5S-FE engine RH	831.4 ± 5.0 mm	32.732 ± 0.197 in.
		3S-GTE engine LH	389.7 ± 5.0 mm	15.343 ± 0.197 in.
		3S-GTE engine RH	389.7 ± 5.0 mm	15.343 ± 0.197 in.

Torque Specifications

Part tightened	kg-cm	ft-lb	N·m
FRONT AXLE AND SUSPENSION			
Disc brake dust cover x Steering knuckle	85	74 in.-lb	8.3
Axle hub lock nut	1,250	90	123
Tie rod end x Steering knuckle	500	36	49
Ball joint x Steering knuckle	820	59	80
ABS speed sensor x Steering knuckle (w/ABS)	80	69 in.-lb	7.8
Steering knuckle x Shock absorber	2,600	188	255
Brake caliper x Steering knuckle	600	43	59
Piston rod x Suspension support	500	36	49
Suspension support x Body	400	29	39
Brake hose x Disc brake caliper	310	22	30
Stabilizer link x Shock absorber	650	47	64
Lower arm x Ball joint	800	58	78
Strut Bar x Lower arm	1,150	83	113
Lower arm x Body	1,200	87	118
Stabilizer bar x Body	195	14	19
Stabilizer bar x Stabilizer link	650	47	64
Strut bar x Body	1,150	83	113
Hub nut	1,050	76	103
REAR AXLE AND SUSPENSION			
Axle carrier x Shock absorber	2,600	188	225
Axle carrier x Tie rod end	1,050	76	103
Axle carrier x Lower arm	1,150	83	113
Stabilizer link x Shock absorber	500	36	49
ABS speed sensor x Axle carrier	80	69 in.-lb	7.8
Disc brake caliper x Axle carrier	600	43	59
Hub bearing lock nut (5S-FE engine)	2,100	152	206
(3S-GTE engine)	3,000	217	294
Axle carrier x Ball joint	1,150	83	113
Bearing bracket stay x Engine	770	56	75
Bearing bracket stay x Bearing bracket	770	56	75
Bearing bracket x Drive shaft center bearing	330	24	32
Bearing bracket x Engine	650	47	64
Drive shaft inboard joint holding hexagon bolts	660	48	65
Piston rod x Suspension support	740	54	73
Suspension support x Body	820	59	80
Brake hose x Disc brake caliper	310	22	30
ABS speed sensor wire harnes x Suspension cross member	55	48 in.-lb	5.4
Lower arm x Ball joint	930	67	91
Lower arm holding nut	1,350	98	132
Strut rod nut	910	66	89
Strut rod x Body	1,200	87	118
Suspension arm x Body	1,050	76	103
Stabilizer bar x Body	195	14	19
Suspension cross member x Body	1,150	83	113
Engine mount x Suspension cross member	790	57	77
Exhaust pipe x Suspension cross member	210	15	21
Stabilizer bar x Stabilizer link	500	36	49

BRAKE SYSTEM

Specifications

Brake pedal	Pedal height (from asphalt sheet) Pedal freeplay Pedal reserve distance at 50 kg (110.2 lb, 490 N)		177 – 187 mm 3 – 5 mm More than 117 mm (4.61 in.)	6.968 – 7.362 in. 0.12 – 0.20 in.
Brake booster	Booster push rod to piston clearance	w/ SST	0 mm	0 in.
Front brake	Disc thickness	STD	25.0 mm	0.984 in.
		Limit	24.0 mm	0.945 in.
	Disc runout	Limit	0.07 mm	0.0028 in.
	Pad thickness	STD	10.0 mm	0.394 in.
		Limit	1.0 mm	0.039 in.
Rear brake	Disc thickness	STD	16.0 mm	0.630 in.
		Limit	15.0 mm	0.591 in.
	Disc runout	Limit	0.10 mm	0.039 in.
	Pad thickness	STD	10.0 mm	0.394 in.
		Limit	1.0 mm	0.039 in.
Parking brake	Lever travel	at 20 kg (44.1 lb, 196 N)	5 – 8 clicks	

Torque Specifications

Part tightened	kg-cm	ft-lb	N·m
Master cylinder x Piston stopper bolt	100	7	10
Master cylinder x Reservoir	17.5	15.2 in.-lb	1.7
Master cylinder x Brake booster	130	9	13
Brake tube union nut	155	11	15
Brake booster clevis lock nut	260	19	25
Brake booster x Pedal bracket	130	18	25
Front disc brake cylinder installation bolt (PE36T Disc)	350	25	34
Front disc brake cylinder installation bolt (PD51 Disc)	255	18	25
Front disc brake torque plate x Steering knuckle	900	65	88
Front disc brake cylinder x Flexible hose	310	22	30
Rear disc brake cylinder installation bolt	200	14	20
Rear disc brake torque plate x Rear axle carrier	600	43	59
Rear disc brake cylinder x Flexible hose	310	22	30
ABS actuator x Body	195	14	19
Bleeder plug	85	74 in.-lb	8.3
ABS actuator x Actuator bracket	55	48 in.-lb	5.4
Front speed sensor installation bolt	80	69 in.-lb	7.8
Rear speed sensor installation bolt	80	69 in.-lb	7.8

STEERING

Specifications

Steering column	Steering wheel freeplay	Maximum	30 mm	1.18 in.	
	Pawl stopper	Mark			
		1 or A	12.65 – 12.75 mm	0.4980 – 0.5020 in.	
		2 or B	12.55 – 12.65 mm	0.4941 – 0.4980 in.	
		3 or C	12.45 – 12.55 mm	0.4902 – 0.4941 in.	
		4 or D	12.35 – 12.45 mm	0.4862 – 0.4902 in.	
		5 or E	12.25 – 12.35 mm	0.4823 – 0.4862 in.	
Manual steering gear housing	Steering rack runout	Maximum	0.3 mm	0.012 in.	
	Pinion bearing preload	at Turning	2.3 – 3.3 kg-cm	2.0 – 2.9 in.-lb	0.2 – 0.3 N·m
	Total preload	at Turning	6 – 13 kg-cm	5.2 – 11.3 in.-lb	0.6 – 1.3 N·m
Power steering	Maximum rise of oil level		Below 5 mm (0.20 in.)		
	Oil pressure	at Idle speed	50 – 55 kg/cm^2 (711 – 782 psi, 4,903 – 5,394 kPa)		
	Steering effort		4.5 kg	9.9 lb	44 N
	Steering rack runout	Maximum	0.3 mm	0.012 in.	
	Total preload	at Turning	9 – 13 kg-cm	7.8 – 11.3 in.-lb	0.9 – 1.3 N·m

Torque Specifications

Steering column	Part tightened	kg-cm	ft-lb	N·m
	Main shaft x Steering wheel	360	26	35
	Steering wheel pad (w/ airbag)	75	65 in.-lb	7.4
	Column tube x Body	260	19	25
	Universal joint bolt	360	26	35
	Tilt lever assembly installation bolt	30	26 in.-lb	2.9
	Tilt pawl set nut	60	52 in.-lb	5.9
	Tilt lever retainer set nut	150	11	15
	Compression spring bushing bolt	80	69 in.-lb	7.8
	Main shaft x Intermediate shaft	360	26	35
Manual steering gear housing	Gear housing bracket x Body	440	32	43
	Tie rod end x Steering knuckle	500	36	49
	Universal joint bolt	360	26	35
	Pinion bearing adjusting screw lock nut	930	67	91
	Rack guide spring cap lock nut	570	41	56
	Rack x Rack end	650	47	64
	Tie rod end lock nut	570	41	56
Power steering (Power steering pump)	PS pump x Crossmember	260	19	25
	Rear pump stay x PS pump	185	13	18
	Rear pump stay x Body	185	13	18
	Pressure tube union nut	370	27	36
(Gear housing)	Gear housing bracket x Body	440	32	43
	Tie rod end x Steering knuckle	500	36	49
	Universal joint bolt	360	26	35
	Pressure tube union bolt	500	36	49
	Return tube	250	18	25

Torque Specifications (Cont'd)

	Part tightened	kg-cm	ft-lb	N·m
(Gear housing) (cont'd)	Rack x Rack end	520	38	51
	Tie rod end lock nut	570	41	56
	Control valve housing x Rack housing	185	13	18
	Control valve shaft-seft-locking nut	250	18	25
	Rack housing cap	600	43	59
	Rack guide spring cap lock nut	340	25	33
	Turn pressure tube x Housing	110	8	11

SRS AIRBAG

Specifications

Front airbag sensor resistance	Terminal	
	⊕ S – ⊕ A	755 – 885 Ω
	⊕ S – ⊖ S	∞
	⊖ S – ⊖ A	Less than 1 Ω

Torque Specifications

Part tightened	kg-cm	ft-lb	N·m
Steering wheel	360	26	35
Steering wheel pad	75	65 in.-lb	7.4
Front airbag sensor	260	19	25
Center airbag sensor assembly	130	9	13

BODY

Torque Specifications

Part tightened	kg-cm	ft-lb	N·m
SEAT			
Seat adjuster x Body	375	27	37
SEAT BELTS			
Adjustable anchor x Body	440	32	43
Shoulder anchor x Adjustable anchor	440	32	43
Anchor x Body	440	32	43
Backle x Seat	440	32	43
Anchor plate x Body	400	29	39
ELR x Body	440	32	43
	80	69 in.-lb	9.8
Bracket x Seat	195	14	19

LUBRICANT

Item		Capacity			Classification
		Liters	US qts	Imp. qts	
Manual transaxle oil (w/ Differential)	S54	2.6	2.7	2.3	ATF DEXRON®II
	E153	4.2	4.4	3.7	Transaxle oil E50 (08885-80206) or equivalent
Automatic transaxle fluid					ATF DEXRON®II
Dry fill		8.0	8.5	7.0	
Drain and refill		3.3	3.5	2.9	
Power steering fluid	Total	0.65	0.69	0.75	TOYOTA POWER STEERING FLUID EH (Part No. 08886-01206) or equivalent
Steering gear housing grease		—			Molybdenum disulphide lithium base, NLGI No. 2
Brake fluid		—			SAE J1703 or FMVSS No. 116 DOT 3

STANDARD BOLT TORQUE SPECIFICATIONS

Page
STANDARD BOLT TORQUE SPECIFICATIONS B-2

STANDARD BOLT TORQUE SPECIFICATIONS

HOW TO DETERMINE BOLT STRENGTH

	Mark	Class
Hexagon head bolt	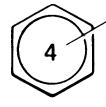 Bolt head No. 4— 5— 6— 7— 8— 9— 10— 11—	4T 5T 6T 7T 8T 9T 10T 11T
	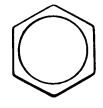 No mark	4T
Hexagon flange bolt w/ washer hexagon bolt	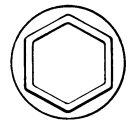 No mark	4T
Hexagon head bolt	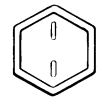 Two protruding lines	5T
Hexagon flange bolt w/ washer hexagon bolt	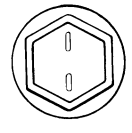 Two protruding lines	6T
Hexagon head bolt	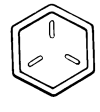 Three protruding lines	7T
Hexagon head bolt	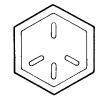 Four protruding lines	8T

	Mark	Class
Stud bolt	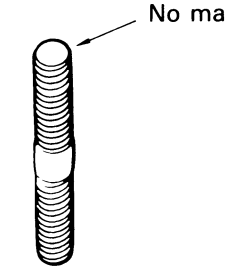 No mark	4T
	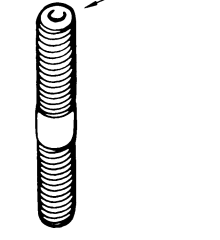 Grooved	6T
Welded bolt	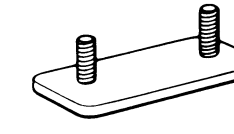	4T

SPECIFIED TORQUE FOR STANDARD BOLTS

Class	Diameter mm	Pitch mm	Specified torque					
			Hexagon head bolt			Hexagon flange bolt		
			kg-cm	ft-lb	N·m	kg-cm	ft-lb	N·m
4T	6	1	55	48 in.-lb	5	60	52 in.-lb	6
	8	1.25	130	9	12.5	145	10	14
	10	1.25	260	19	26	290	21	29
	12	1.25	480	35	47	540	39	53
	14	1.5	760	55	74	850	61	84
	16	1.5	1,150	83	115	—	—	—
5T	6	1	65	56 in.-lb	6.5	75	65 in.-lb	7.5
	8	1.25	160	12	15.5	175	13	17.5
	10	1.25	330	24	32	360	26	36
	12	1.25	600	43	59	670	48	65
	14	1.5	930	67	91	1,050	76	100
	16	1.5	1,400	101	140	—	—	—
6T	6	1	80	69 in.-lb	8	90	78 in.-lb	9
	8	1.25	195	14	19	210	15	21
	10	1.25	400	29	39	440	32	44
	12	1.25	730	53	71	810	59	80
	14	1.5	1,100	80	110	1,250	90	125
	16	1.5	1,750	127	170	—	—	—
7T	6	1	110	8	10.5	120	9	12
	8	1.25	260	19	25	290	21	28
	10	1.25	530	38	52	590	43	58
	12	1.25	970	70	95	1,050	76	105
	14	1.5	1,500	108	145	1,700	123	165
	16	1.5	2,300	166	230	—	—	—
8T	8	1.25	300	22	29	330	24	33
	10	1.25	620	45	61	690	50	68
	12	1.25	1,100	80	110	1,250	90	120
9T	8	1.25	340	25	34	380	27	37
	10	1.25	710	51	70	790	57	78
	12	1.25	1,300	94	125	1,450	105	140
10T	8	1.25	390	28	38	430	31	42
	10	1.25	800	58	78	890	64	88
	12	1.25	1,450	105	140	1,600	116	155
11T	8	1.25	430	31	42	480	35	47
	10	1.25	890	64	87	990	72	97
	12	1.25	1,600	116	155	1,800	130	175

SST AND SSM

	Page
SST (SPECIAL SERVICE TOOLS)	C-2
SSM (SPECIAL SERVICE MATERIALS)	C-17

SST (SPECIAL SERVICE TOOLS)

Illustration	Part No.	Part Name	EM	TC	FI	LU	IG	ST	CH	CL	MT E153	MT S54	AT	SA Front	SA Rear	BR	SR	AB	BE	BO
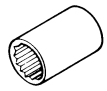	09011-38121	12 mm Socket Wrench for 12 Pointed Head	*1 ●																	
	09032-00100	Oil Pan Seal Cutter				●														
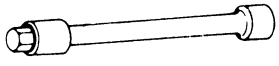	09043-38100	Hexagon 10 mm Wrench	*2 ●																	
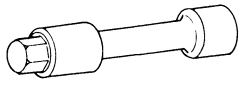	09043-88010	Hexagon 8 mm Wrench													*3 ●					
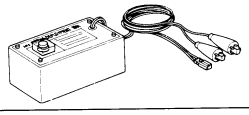	09082-00700	SRS Airbag Deployment Tool																●		
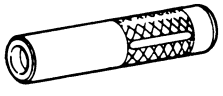	09201-41020	Valve Stem Oil Seal Replacer	●					*4 ●												
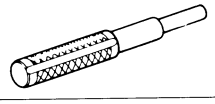	09201-60011	Valve Guide Bushing Remover & Replacer									●	●								
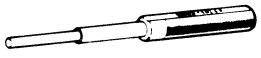	09201-70010	Valve Guide Bushing Remover & Replacer	●																	
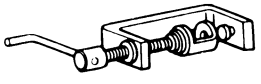	09202-70010	Valve Spring Compressor	●																	
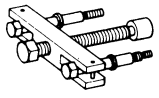	09213-31021	Crankshaft Pulley Puller	*3 ●														*5 ●	*5 ●		
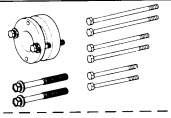	09213-54015	Crankshaft Pulley Holding Tool	●																	
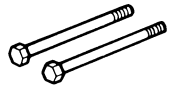	(09214-00030)	(Bolt)	*6 ●																	

Remarks:

*1 Cylinder head bolt and connecting rod nut (5S-FE only)

*2 Cylinder head bolt (3S-GTE only)

*3 3S-GTE only

*4 Starter bearing for 1.4 kW (conventional) type and 1.6 kW

*5 Steering wheel (USA)

*6 5S-FE only

SST (SPECIAL SERVICE TOOLS) (Cont'd)

Section / Part Name / Part No. / Illustration			EM	TC	FI	LU	IG	ST	CH	CL	MT		AT	SA		BR	SR	AB	BE	BO
											E153	S54		Front	Rear					
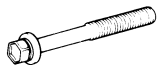	(90119-08216)	(Bolt)	*1 ●																	
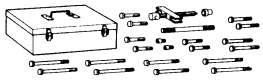	09213-60017	Crankshaft Pulley & Gear Puller Set	●																	
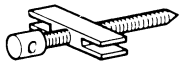	(09213-00020)	(Body with Bolt)	*2 ●																	
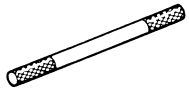	(09213-00030)	(Handle)	*2 ●																	
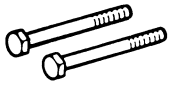	(09213-00050)	(Bolt Set)	*2 ●																	
	09222-30010	Connecting Rod Bushing Remover & Replacer	●																	
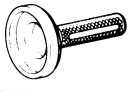	09223-15010	Crankshaft Rear Oil Seal Replacer									●				●					
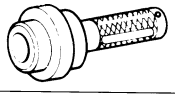	09223-46011	Crankshaft Front Oil Seal Replacer	*3 ●																	
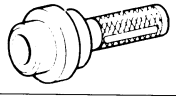	09223-50010	Crankshaft Front Oil Seal Replacer	*4 ●																	
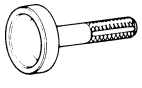	09223-63010	Crankshaft Rear Oil Seal Replacer	●																	
	09226-10010	Crankshaft Front & Rear Bearing Replacer	●																	
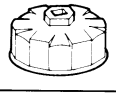	09228-06500	Oil Filter Wrench				●														

Remarks:
*1 3S-GTE only
*2 5S-FE only
*3 Camshaft oil seal (5S-FE only)
*4 Camshaft oil seal (3S-GTE only)

SST (SPECIAL SERVICE TOOLS) (Cont'd)

Section / Part Name / Part No. / Illustration			EM	TC	FI	LU	IG	ST	CH	CL	MT E153	MT S54	AT	SA Front	SA Rear	BR	SR	AB	BE	BO
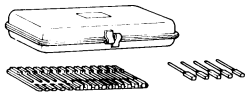	09240-00020	Wire Gauge Set					●						●							
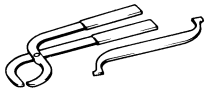	09248-55010	Valve Clearance Adjust Tool Set	●																	
	09249-63010	Torque Wrench Adaptor	*1 ●																	
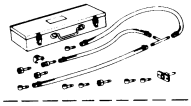	09268-41045	Injection Measuring Tool Set			●															
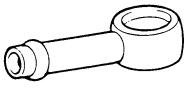	(09268-41080)	(No. 6 Union)			●															
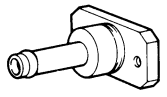	(09268-41090)	(No. 7 Union)			*2 ●															
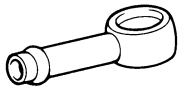	(90405-09015)	(No. 1 Union)			●															
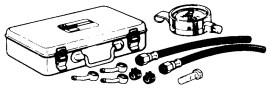	09268-45012	EFI Fuel Pressure Gauge			●															
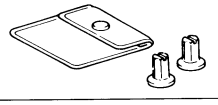	09268-74010	Injector Remover			*3 ●															
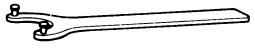	09278-54012	Drive Shaft Holding Tool	*4 ●																	
	09285-76010	Injection Pump Camshaft Bearing Cone Replacer						*5 ●	*6 ●											
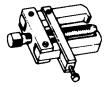	09286-46011	Injection Pump Spline Shaft Puller						*7 ●	*8 ●											

Remarks:
- *1 Camshaft timing pulley
- *2 5S-FE only
- *3 3S-GTE only
- *4 Camshaft timing pulley (5S-FE only)
- *5 Starter bearing for 1.0 kW type
- *6 Alternator rear bearing
- *7 Starter bearing
- *8 Rectifier end frame

SST (SPECIAL SERVICE TOOLS) (Cont'd)

Section / Part Name / Part No. / Illustration		EM	TC	FI	LU	IG	ST	CH	CL	MT		AT	SA		BR	SR	AB	BE	BO
										E153	S54		Front	Rear					
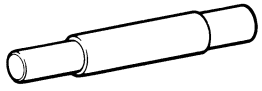	09301-17010 Clutch Guide Tool								●	●									
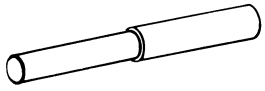	09301-32010 Clutch Guide Tool								●		●								
	09308-00010 Oil Seal Puller									●	●	●		*1 ●					
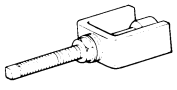	09309-32050 5th Driven Gear Replacer										●								
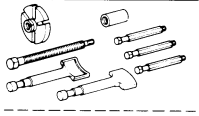	09310-17010 Transaxle Gear Remover & Replacer									●									
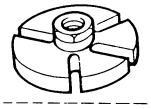	(09310-07010) (Plate)									●									
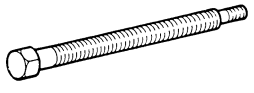	(09310-07020) (Center Bolt)									●									
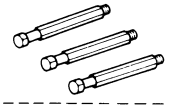	(09310-07030) (Set Bolt)									●									
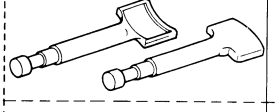	(09310-07040) (Claw)									●									
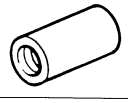	(09310-07050) (Adaptor)									●									
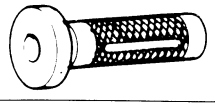	09310-35010 Countershaft Bearing Replacer										●			*2 ●					
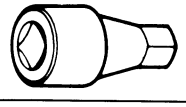	09313-30021 Detent Ball Plug Socket									●	●								

Remarks:
*1 3S-GTE (LH)
*2 Rear axle hub

SST (SPECIAL SERVICE TOOLS) (Cont'd)

Section / Part Name / Part No. / Illustration			EM	TC	FI	LU	IG	ST	CH	CL	MT		AT	SA		BR	SR	AB	BE	BO
											E153	S54		Front	Rear					
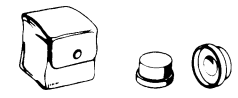	09315-00021	Clutch Release Bearing Remover & Replacer													*1 ●					
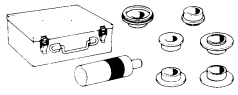	09316-60010	Transmission & Transfer Bearing Replacer									●	●			●					
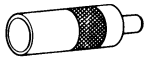	(09316-00010)	(Replacer Pipe)									●	●			*2 ●					
	(09316-00020)	(Replacer "A")									●									
	(09316-00030)	(Replacer "B")										●								
	(09316-00040)	(Replacer "C")									●				*2 ●					
	(09316-00050)	(Replacer "D")									●									
	(09316-00070)	(Replacer "F")									●	●								
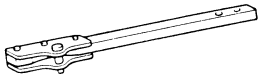	09330-00021	Companion Flange Holding Tool	*3 ●										●							
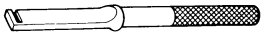	09333-00013	Clutch Diaphragm Spring Aligner								●										
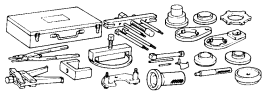	09350-32014	TOYOTA Automatic Transmission Tool Set										●	●		●					
	(09351-32010)	(One-way Clutch Test Tool)											●							

Remarks:
*1 Rear axle hub
*2 5S-FE (M/T) and 3S-GTE (RH)
*3 Crankshaft pulley

SST (SPECIAL SERVICE TOOLS) (Cont'd)

Section / Part Name / Part No. / Illustration			EM	TC	FI	LU	IG	ST	CH	CL	MT		AT	SA		BR	SR	AB	BE	BO
											E153	S54		Front	Rear					
	(09351-32020)	(Stator Stopper)											●							
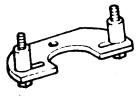	(09351-32032)	(Counter Driven Gear Holding Tool)											●							
	(09351-32040)	(No. 1 Piston Spring Compressor)											●							
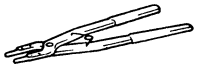	(09351-32050)	(Snap Ring Expander)											●							
	(09351-32061)	(Oil Pump Puller)											●							
	(09351-32070)	(No. 2 Piston Spring Compressor)											●							
	(09351-32090)	(Oil Seal Remover & Replacer)										●	●							
	(09351-32100)	(Drive Pinion Bearing Replacer)											●							
	(09351-32111)	(Side Bearing Race Replacer)											●		*1 ●					
	(09351-32120)	(Overdrive Bearing Replacer)										●	●							
	(09351-32130)	(Handle)										●	●		*2 ●					
	(09351-32140)	(Oil Seal Replacer)											●							

Remarks:
*1 5S-FE (A/T LH)
*2 5S-FE (A/T RH)

SST (SPECIAL SERVICE TOOLS) (Cont'd)

Section / Part Name / Part No. / Illustration			EM	TC	FI	LU	IG	ST	CH	CL	MT		AT	SA		BR	SR	AB	BE	BO
											E153	S54		Front	Rear					
	(09351-32150)	(Oil Seal Replacer)										●	●		*1 ●					
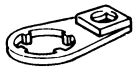	(09351-32170)	(Lock Nut Wrench)											●							
	(09351-32180)	(Bearing Replacer)											●							
	(09351-32190)	(Measure Terminal)											●							
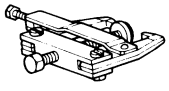	09502-10012	Differential Side Bearing Puller										●	●							
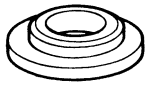	09506-30012	Differential Drive Pinion Rear Bearing Cone Replacer									●									
	09515-10010	Rear Axle Bearing Replacer										●								
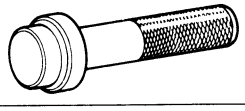	09517-36010	Rear Axle Shaft Oil Seal Replacer									●									
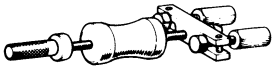	09520-00031	Rear Axle Shaft Puller												●	●					
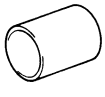	09527-17010	Rear Axle Shaft Bearing Remover													●					
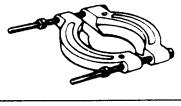	09555-55010	Differential Drive Pinion Bearing Replacer											●							
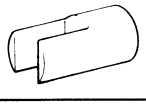	09564-32011	Differential Preload Adaptor										●	●							

Remark:
*1 5S-FE (A/T)

SST (SPECIAL SERVICE TOOLS) (Cont'd)

Section / Part Name / Part No. / Illustration			EM	TC	FI	LU	IG	ST	CH	CL	MT		AT	SA		BR	SR	AB	BE	BO
											E153	S54		Front	Rear					
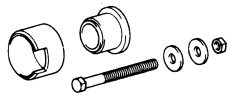	09570-22011	Differential Mounting Cushion Remover & Replacer													*1 ●					
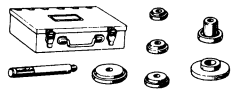	09608-12010	Front Hub & Drive Pinion Bearing Replacer Set									●									
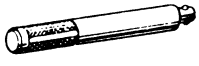	(09608-00020)	(Remover & Replacer Handle)									●									
	(09608-00060)	(Drive Pinion Front Bearing Cup Replacer)									●									
	(09608-00080)	(Differential Side Bearing Cone Replacer)									●									
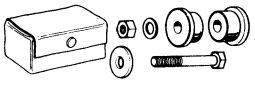	09608-16041	Front Hub Bearing Adjusting Tool													●					
	(09608-02010)	(Cover)													*1 ●					
	(09608-02020)	(Bolt & Nut)													*2 ●					
	(09608-02040)	(Retainer)													*2 ●					
	09608-20012	Front Hub & Drive Pinion Bearing Tool Set							●			●			●					
	(09608-00030)	(Replacer)							*3 ●			●								
	(09608-00040)	(Replacer)													●					

Remarks:
*1 3S-GTE only
*2 5S-FE only
*3 Alternator front bearing

SST (SPECIAL SERVICE TOOLS) (Cont'd)

Section / Part Name / Part No. / Illustration			EM	TC	FI	LU	IG	ST	CH	CL	MT E153	MT S54	AT	SA Front	SA Rear	BR	SR	AB	BE	BO
	(09608-00080)	(Replacer)										●								
	(09608-03020)	(Handle)										●			●					
	(09608-03060)	(Replacer)										●								
	09608-30012	Front Hub & Drive Pinion Bearing Tool Set												●						
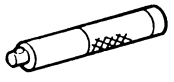	(09608-04020)	(Handle)												●						
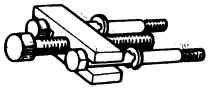	09609-20011	Steering Wheel Puller															*1 ●			
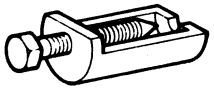	09610-20012	Pitman Arm Puller												●						
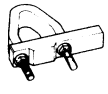	09612-00012	Rack & Pinion Steering Rack Housing Stand															●			
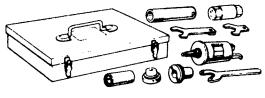	09612-10093	Steering Gear Housing Overhaul Tool Set															●			
	(09617-10010)	(Steering Pinion Bearing Adjusting Screw Lock Nut Wrench)															*2 ●			
	(09628-10020)	(Ball Joint Lock Nut Wrench)															*2 ●			
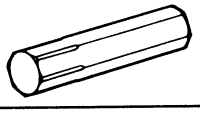	09612-10131	Hexagon Wrench															*3 ●			

Remarks:

*1 Canada only

*2 Manual steering gear housing

*3 Power steering gear housing

SST (SPECIAL SERVICE TOOLS) (Cont'd)

Section / Part Name / Part No. / Illustration			EM	TC	FI	LU	IG	ST	CH	CL	MT		AT	SA		BR	SR	AB	BE	BO
											E153	S54		Front	Rear					
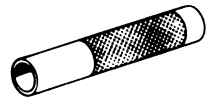	09612-22011	Tilt Handle Bearing Replacer										●					*1 ●			
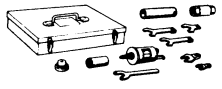	09612-24014	Steering Gear Housing Overhaul Tool Set															●			
	(09612-10022)	(Hexagon Wrench)															*2 ●			
	(09612-10061)	(Steering Pinion Bearing Replacer)															*2 ●			
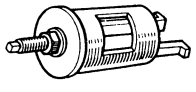	(09613-22011)	(Steering Rack Shaft Bushing Puller)															*3 ●			
	(09616-10010)	(Steering Pinion Bearing Adjusting Socket)															*2 ●			
	(09616-10020)	(Steering Pinion Bearing Adjusting Screw Wrench)															*2 ●			
	(09617-22030)	(Steering Rack End Wrench)															*3 ●			
	(09617-24011)	(Steering Rack Wrench)															*2 ●			
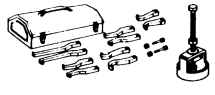	09612-65014	Steering Worm Bearing Puller									●									
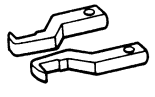	(09612-01020)	(Claw "B")									●									
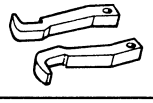	(09612-01060)	(Claw "E")									●									

Remarks:

*1 Control valve housing oil seal (PS)

*2 Manual steering gear housing

*3 Power steering gear housing

SST (SPECIAL SERVICE TOOLS) (Cont'd)

Section / Part Name / Part No. / Illustration			EM	TC	FI	LU	IG	ST	CH	CL	MT E153	MT S54	AT	SA Front	SA Rear	BR	SR	AB	BE	BO
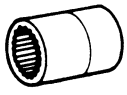	09616-00010	Steering Worm Bearing Adjusting Socket															*1 ●			
	09616-30011	Steering Worm Bearing Adjusting Screw Wrench	*2 ●																	
	09617-10020	Steering Rack End Wrench															*1 ●			
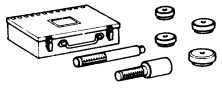	09620-30010	Steering Gear Box Replacer Set				●											●			
	(09627-30010)	(Steering Sector Shaft Bushing Replacer)				*3 ●														
	(09631-00020)	(Handle)				*3 ●											●			
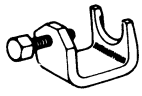	09628-10011	Ball Joint Puller												●	●					
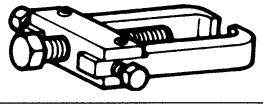	09628-62011	Ball Joint Puller													●		●			
	09630-24013	Steering Rack Oil Seal Tool Set															●			
	(09620-24010)	(Valve Cup Oil Seal Remover)															●			
	(09620-24020)	(Valve Cup Oil Seal Replacer)															●			
	(09620-24030)	(Valve Cup Bearing Replacer)															●			

Remarks:
- *1 Power steering gear housing
- *2 Oil pump pulley
- *3 Oil pump oil seal

SST (SPECIAL SERVICE TOOLS) (Cont'd)

Section / Part Name / Part No. / Illustration			EM	TC	FI	LU	IG	ST	CH	CL	MT		AT	SA		BR	SR	AB	BE	BO
											E153	S54		Front	Rear					
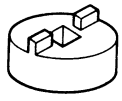	09631-10021	Rack Stopper Wrench															*1 ●			
	09631-10040	Steering Rack Cover "D"															*1 ●			
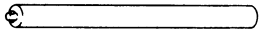	09631-12020	Handle															*1 ●			
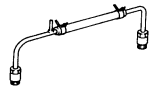	09631-12071	Steering Rack Oil Seal Test Tool															*1 ●			
	09631-20031	Oil Seal "B" Remover															*1 ●			
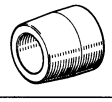	09631-20070	Seal Ring Guide															*1 ●			
	09631-20081	Seal Ring Tool															*1 ●			
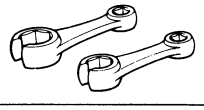	09631-22020	Power Steering Hose Nut 14 x 17 mm Wrench Set			*2 ●												●			
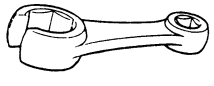	09633-00020	Power Steering Hose Nut Wrench															●			
	09649-17010	Steering Knuckle Tool												●						
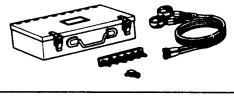	09709-29017	LSPV Gauge Set														●				
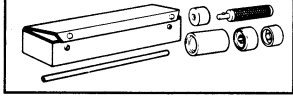	09710-22041	Rear Suspension Bushing Tool Set													●					

Remarks:

*1 Power steering gear housing

*2 Fuel line flare nut

SST (SPECIAL SERVICE TOOLS) (Cont'd)

Section / Part Name / Part No. / Illustration			EM	TC	FI	LU	IG	ST	CH	CL	MT		AT	SA		BR	SR	AB	BE	BO
											E153	S54		Front	Rear					
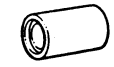	(09710-02050)	(Base)													●					
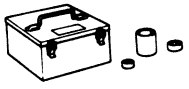	09710-30030	Rear Suspension Bushing Tool Set											●							
	(09710-03160)	(Remover)											●							
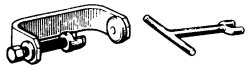	09719-14020	Rear Disc Brake Tool Set														●				
	(09719-00020)	(Piston Driver)														●				
	09720-00012	Shock Absorber Overhaul Tool Set												●						
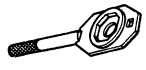	(09721-00071)	(Front Shock Absorber Ring Nut Wrench)												●						
	09726-10010	Lower Suspension Arm Bushing Remover & Replacer													●					
	(09726-00030)	(Spacer)													●					
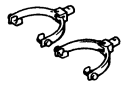	09727-00045	Arm Set "B"												●						
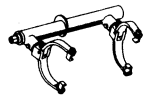	09727-30020	Coil Spring Compressor												●	●					
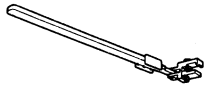	09729-22031	Front Spring Upper Seat Holder												●						

SST (SPECIAL SERVICE TOOLS) (Cont'd)

Section / Part Name / Part No. / Illustration			EM	TC	FI	LU	IG	ST	CH	CL	MT		AT	SA		BR	SR	AB	BE	BO
											E153	S54		Front	Rear					
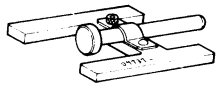	09737-00010	Brake Booster Push Rod Gauge														●				
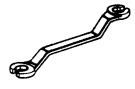	09751-36011	Brake Tube Union Nut 10 x 12 mm Wrench								●						●				
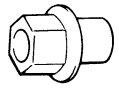	09756-00010	Adjusting Bolt Guide Nut														●				
	09812-00010	Door Hinge Set Bolt Wrench																		●
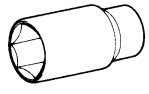	09816-30010	Oil Pressure Switch Socket	*1 ●																	
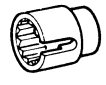	09817-16011	Back-up Light Switch Tool									●									
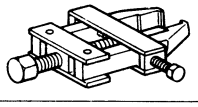	09820-00021	Alternator Rear Bearing Puller							*2 ●											
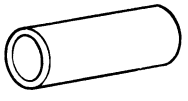	09820-00030	Alternator Rear Bearing Replacer						*3 ●												
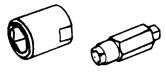	09820-63010	Alternator Pulley Set Nut Wrench Set							●											
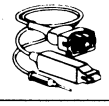	09842-30050	Wire "A" EFI Inspection			●															
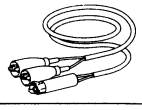	09842-30060	Wire "E" EFI Inspection			*4 ●															
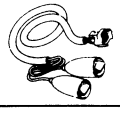	09842-30070	Wire "F" EFI Inspection			*5 ●															

Remarks:

*1 Knock sensor (3S-GTE only)

*2 Alternator rear bearing

*3 Starter bearing for 1.4 kW (compact) type

*4 3S-GTE only

*5 5S-FE only

SST (SPECIAL SERVICE TOOLS) (Cont'd)

Section / Part Name / Part No. / Illustration			EM	TC	EC	FI	LU	IG	ST	CH	CL	MT		AT	SA		BR	AB	BE	BO	EC
												E153	S54		Front	Rear					
	09843-18020	Diagnosis Check Wire	●		●	●		●						●			●	●	●		
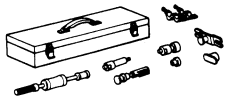	09910-00015	Puller Set																●			
	(09911-00011)	(Puller Clamp)																●			
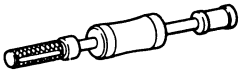	(09912-00010)	(Puller Slide Hammer)																●			
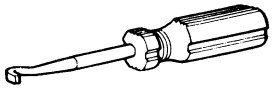	09921-00010	Spring Tension Tool										●	●								
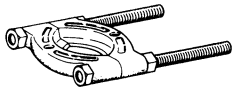	09950-00020	Bearing Remover										●	●	●		●					
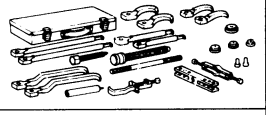	09950-20017	Universal Puller										●	●		●	●		●			
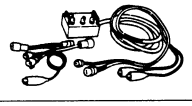	09990-00150	ABS (Anti-lock Brake System) Actuator Checker and Sub-harness															●				
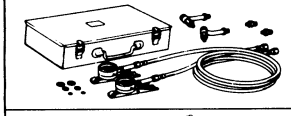	09992-00094	Automatic Transmission Oil Pressure Gauge Set												●							
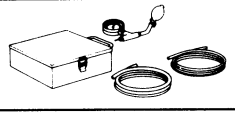	09992-00241	Turbocharger Pressure Gauge		*1 ●																●	

Remark:
*1 3S-GTE only

NOTE: For reference to SSTs for the Air Conditioning System see page AC-7.

SSM (SPECIAL SERVICE MATERIALS)

Part Name	Part No.	Sec.	Use etc.
Seal packing or equivalent	08826-00080	EM	Cylinder head semi-circular plug Cylinder head Camshaft bearing cap
		LU	Oil pan
Seal packing 1281, Three bond 1281 or equivalent	08826-00090	MT	(S54) Transmission case Transmission case cover (E153) Transmission case Transaxle case cover
Seal packing 1121, Three bond 1121 or equivalent	08826-00801	SA	Inboard joint cover
Adhesive 1324, Three bond 1324 or equivalent	08833-00070	EM	Flywheel mount bolt for M/T (3S-GTE) Flywheel or drive plate mount bolt (5S-FE)
		EC	EVAP BVSV
		MT	Rear bearing retainer set bolts
		AT	Torque converter set bolts Oil gallery cover set bolts
Adhesive 1344, Three bond 1344, Loctite 242 or equivalent	08833-00080	EM	No.1 idler pulley pivot bolt (3S-GTE)
		LU	Oil pressure switch
		MT	(S54) Plug threads Idler gear shaft lock bolt Side bearing retainer set bolts Transmission case cover set bolts (E153) Plug threads Transaxle case cover set bolts Control shaft cover set bolts
		AT	Transaxle housing set bolts
		SR	(Manual steering gear housing) Pinion bearing adjusting screw Pinion bearing adjusting screw lock nut Rack guide spring cap Rack guide spring cap lock nut (Power steering gear housing) Rack housing cap Rack guide spring cap Rack guide spring cap lock nut
Adhesive 1131, Three bond 1131, Loctite 518 or equivalent	08833-00090	AT	Transaxle rear cover Transaxle housing

SSM (SPECIAL SERVICE MATERIALS) (Cont'd)

Part Name	Part No.	Sec.	Use etc.
Dupont paste No.4817	–	BE	Rear window defogger wire
Windshield glass adhesive set No.15	08850-00070	BO	Windshield (0 – 15°C or 32 – 59°F)
Windshield glass adhesive set No.35	08850-00080	BO	Windshield (15 – 35°C or 59 – 95°F)
Windshield glass adhesive set No.45	08850-00090	BO	Windshield (35 – 45°C or 95 – 113°F)
Dam kit	04562-12010	BO	Windshield
Butyl tape set	08850-00065	BO	Moulding Quarter window glass
Auto glass sealer	08833-00030	BO	Moulding Windshield Back window glass

NOTE: For reference to SSMs for the Air Conditioning System see page AC-7.